US 20050048977A1

(19) United States

(12) Patent Application Publication (10) Pub. No.: US 2005/0048977 A1

Dorenbosch et al. (43) Pub. Date: Mar. 3, 2005

(54) SYSTEM AND METHOD TO IMPROVE WLAN HANDOVER BEHAVIOR AND PHONE BATTERY LIFE WHEN STATIONARY IN BORDER CELLS

(75) Inventors: **Jheroen P. Dorenbosch**, Paradise, TX (US); **Anatoly S. Belkin**, Glenview, IL (US); **Zaffer S. Merchant**, Parkland, FL (US); **Alex P. Hirsbrunner**, Bloomingdale, IL (US)

Correspondence Address:
FLEIT, KAIN, GIBBONS, GUTMAN, BONGINI & BIANCO P.L.
551 N.W. 77TH STREET, SUITE 111
BOCA RATON, FL 33487 (US)

(73) Assignee: **MOTOROLA, INC.**, SCHAUMBURG, IL (US)

(21) Appl. No.: **10/649,999**

(22) Filed: **Aug. 26, 2003**

Publication Classification

(51) Int. Cl.[7] H04Q 7/20

(52) U.S. Cl. 455/441

(57) **ABSTRACT**

A system, computer readable medium, mobile subscriber device and method determine that the device **(306)**, operating on a first communications system is detecting a triggering event, which may be the detection of a wireless local area network border cell **(210)** or a degradation in signal quality. The device **(306)** then initiates a registration sequence with a second wireless communication system if the device **(306)** has detected the triggering event, determines the speed and/or displacement of the device **(306)**, and conducts any present and subsequent calls via the second wireless communication system if the speed and/or displacement of the device exceeds a predetermined threshold. The registration sequence may be aborted if at least one of the speed and displacement of the device **(306)** does not exceed predetermined thresholds. Movement of the device **(306)** may be determined by an accelerometer **(314)** or GPS chipset.

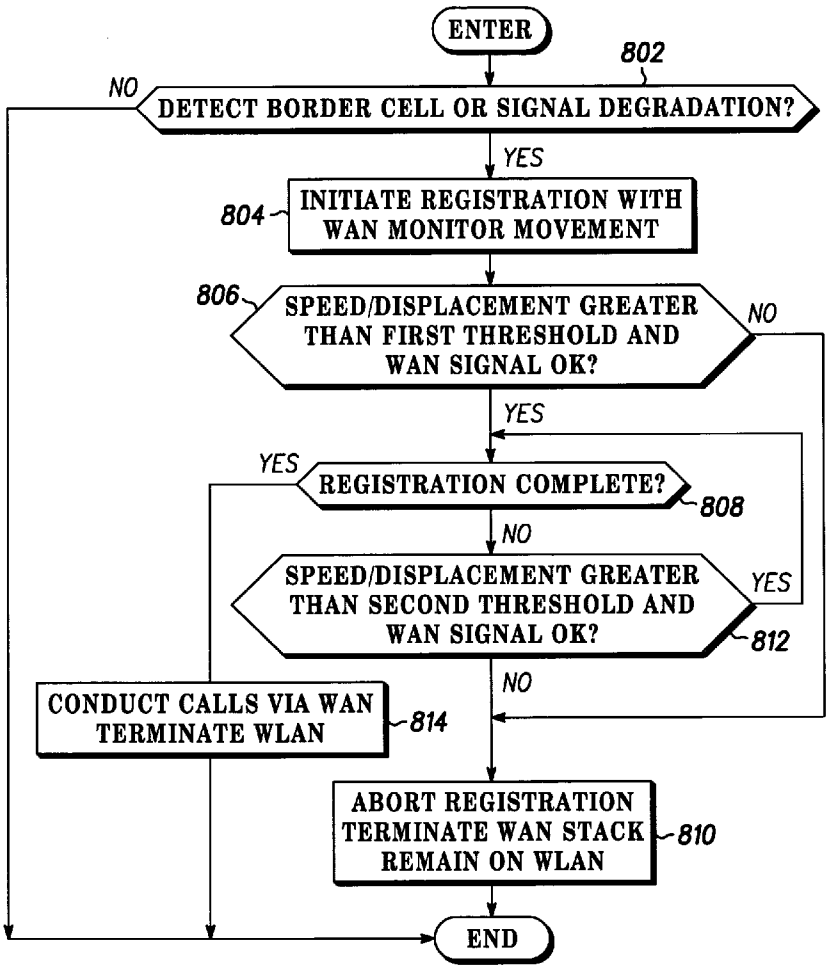

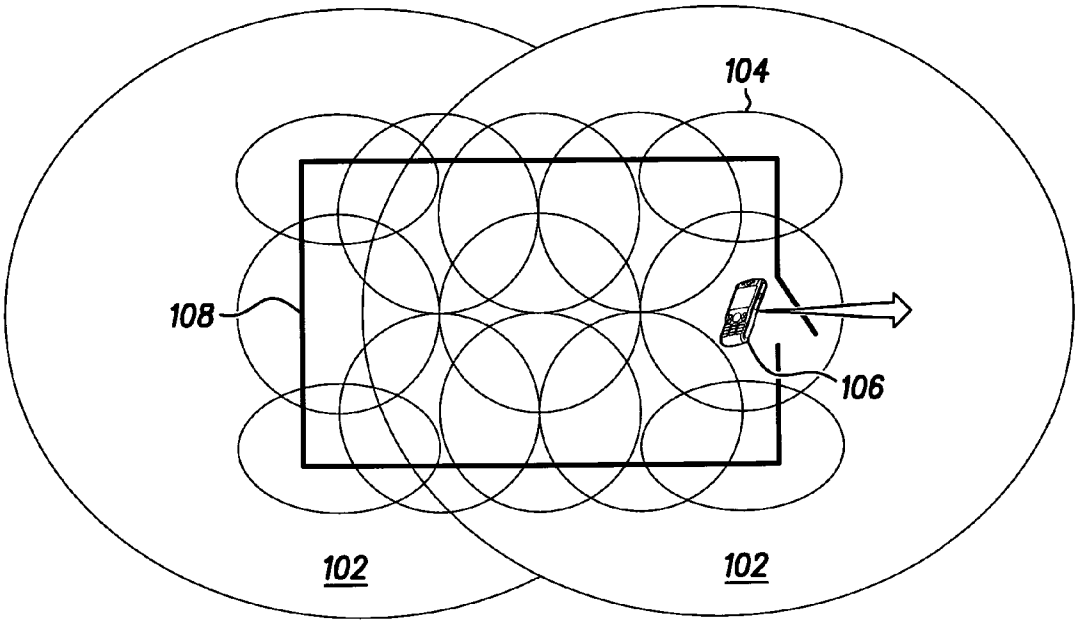

100

- PRIOR ART - FIG. 1

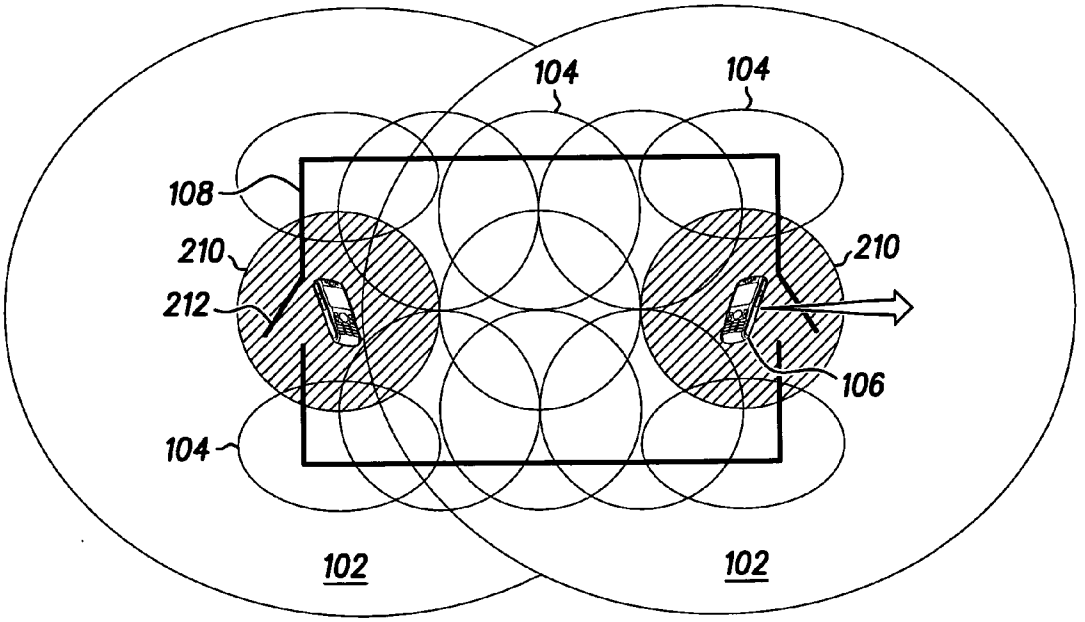

200

- PRIOR ART - FIG. 2

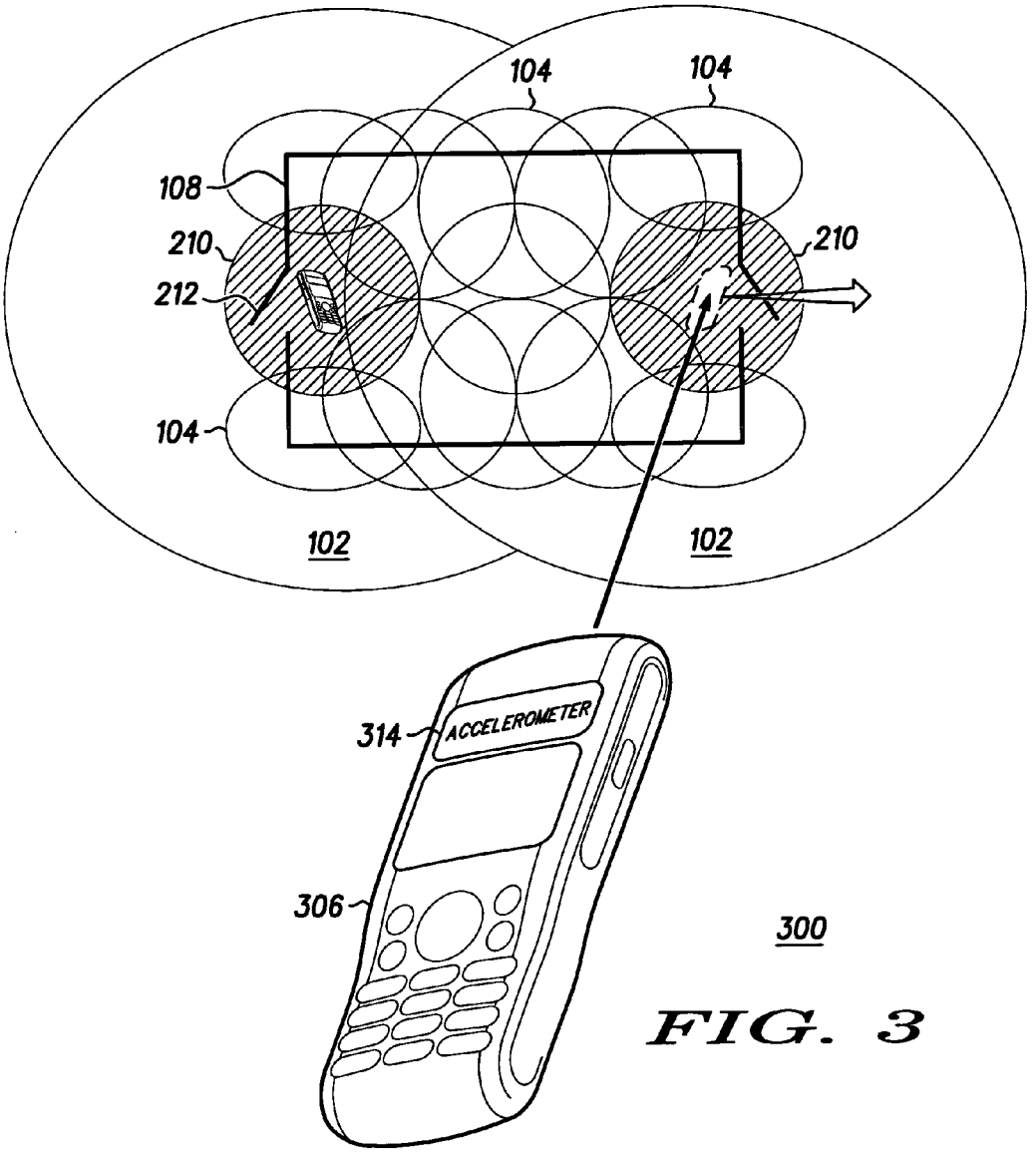

FIG. 3

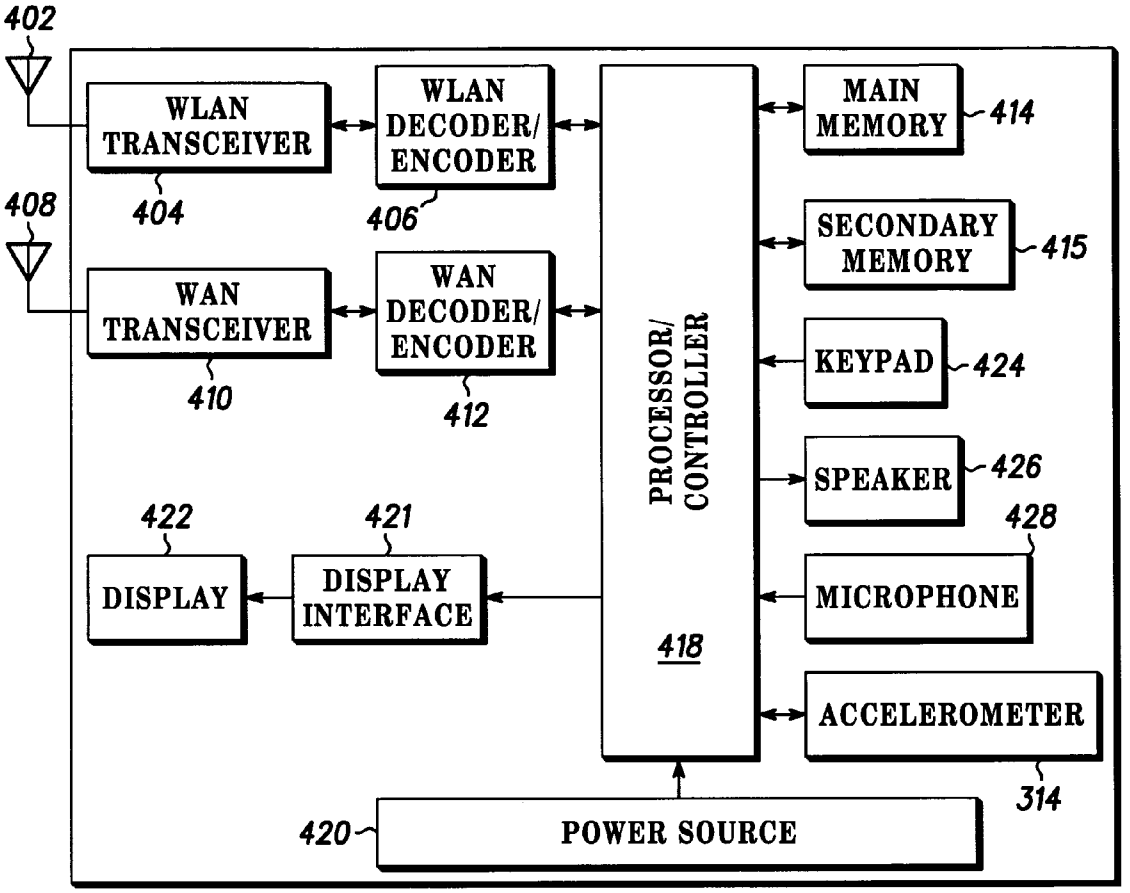

FIG. 4 306

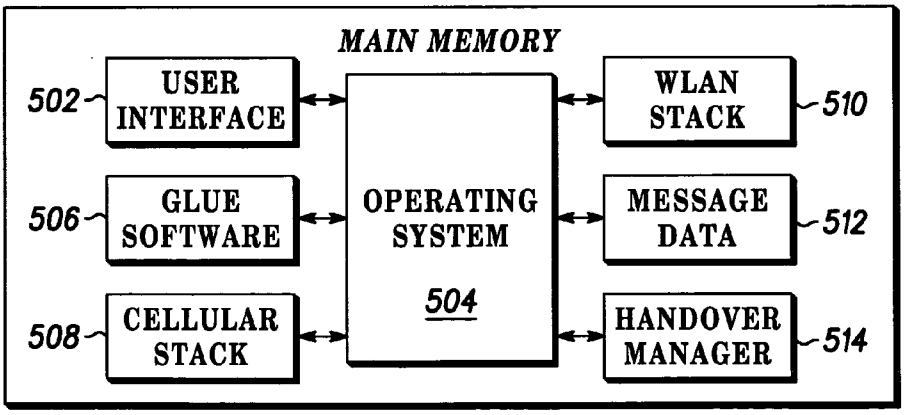

FIG. 5 414

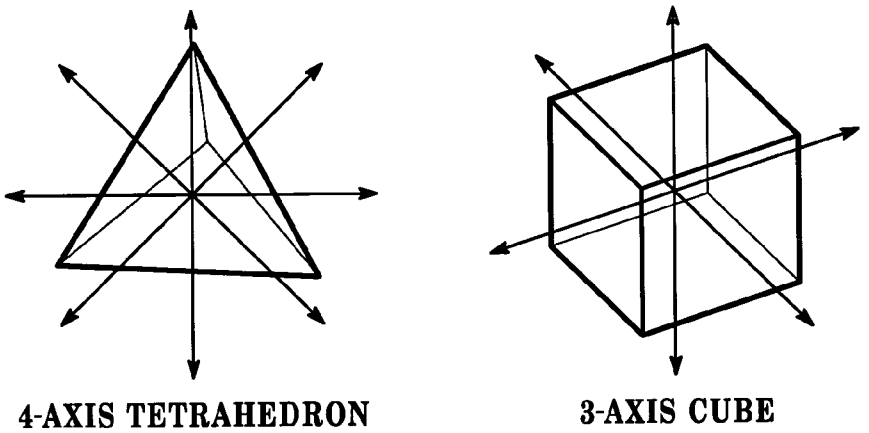

FIG. 6

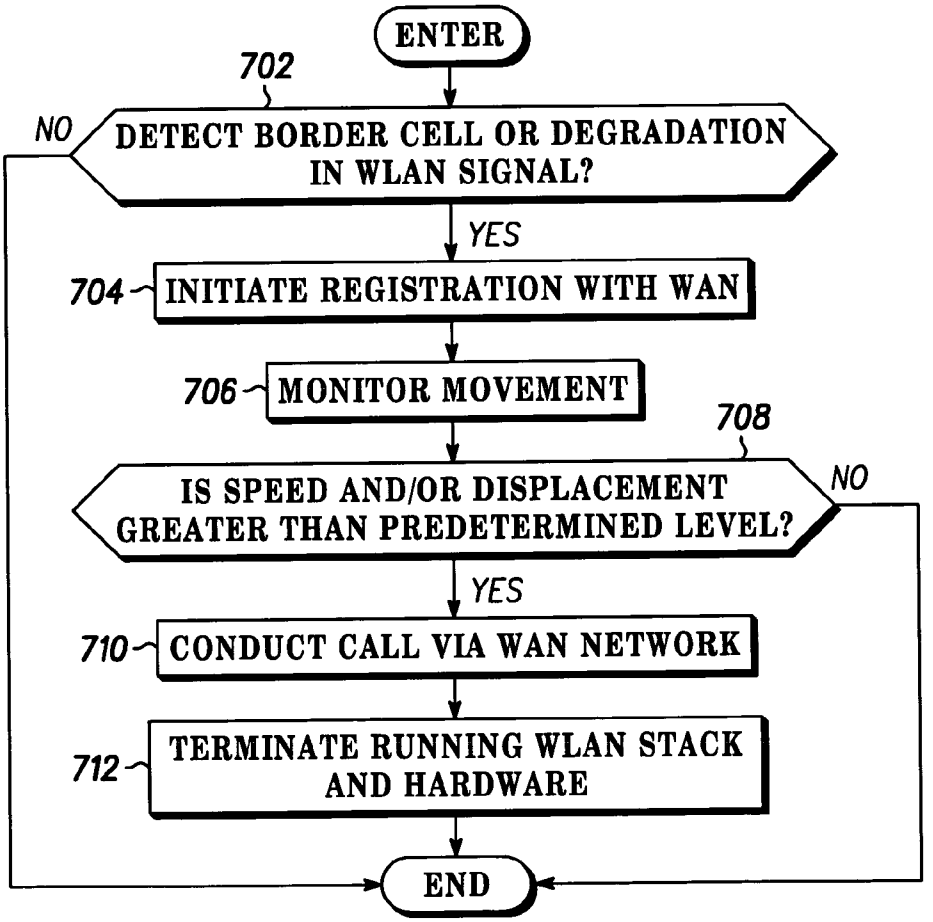

FIG. 7 700

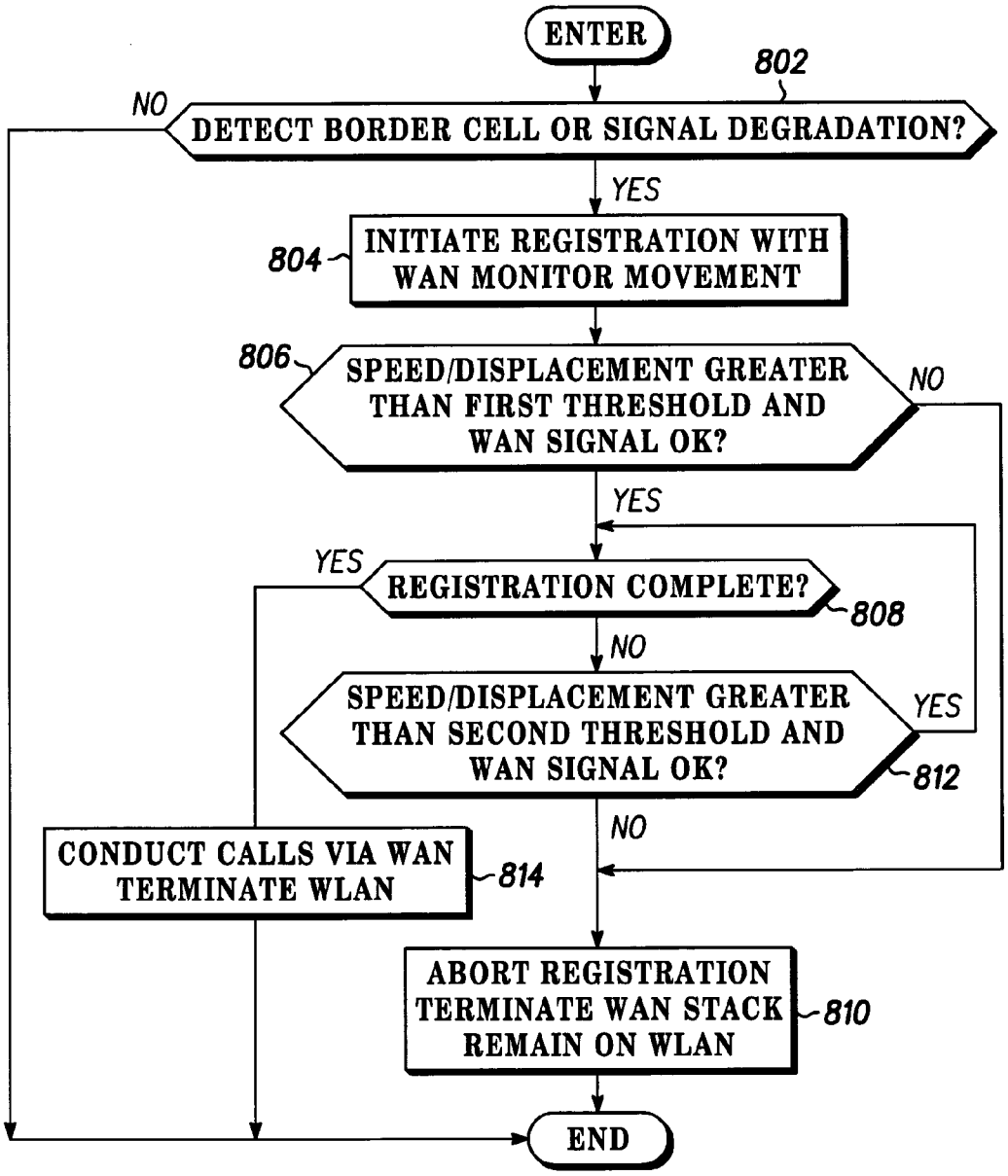
ENTER
802
NO
DETECT BORDER CELL OR SIGNAL DEGRADATION?
YES
804
INITIATE REGISTRATION WITH WAN MONITOR MOVEMENT
806
SPEED/DISPLACEMENT GREATER THAN FIRST THRESHOLD AND WAN SIGNAL OK?
NO
YES
YES
REGISTRATION COMPLETE?
808
NO
SPEED/DISPLACEMENT GREATER THAN SECOND THRESHOLD AND WAN SIGNAL OK?
YES
812
NO
CONDUCT CALLS VIA WAN TERMINATE WLAN
814
ABORT REGISTRATION TERMINATE WAN STACK REMAIN ON WLAN
810
END

FIG. 8 800

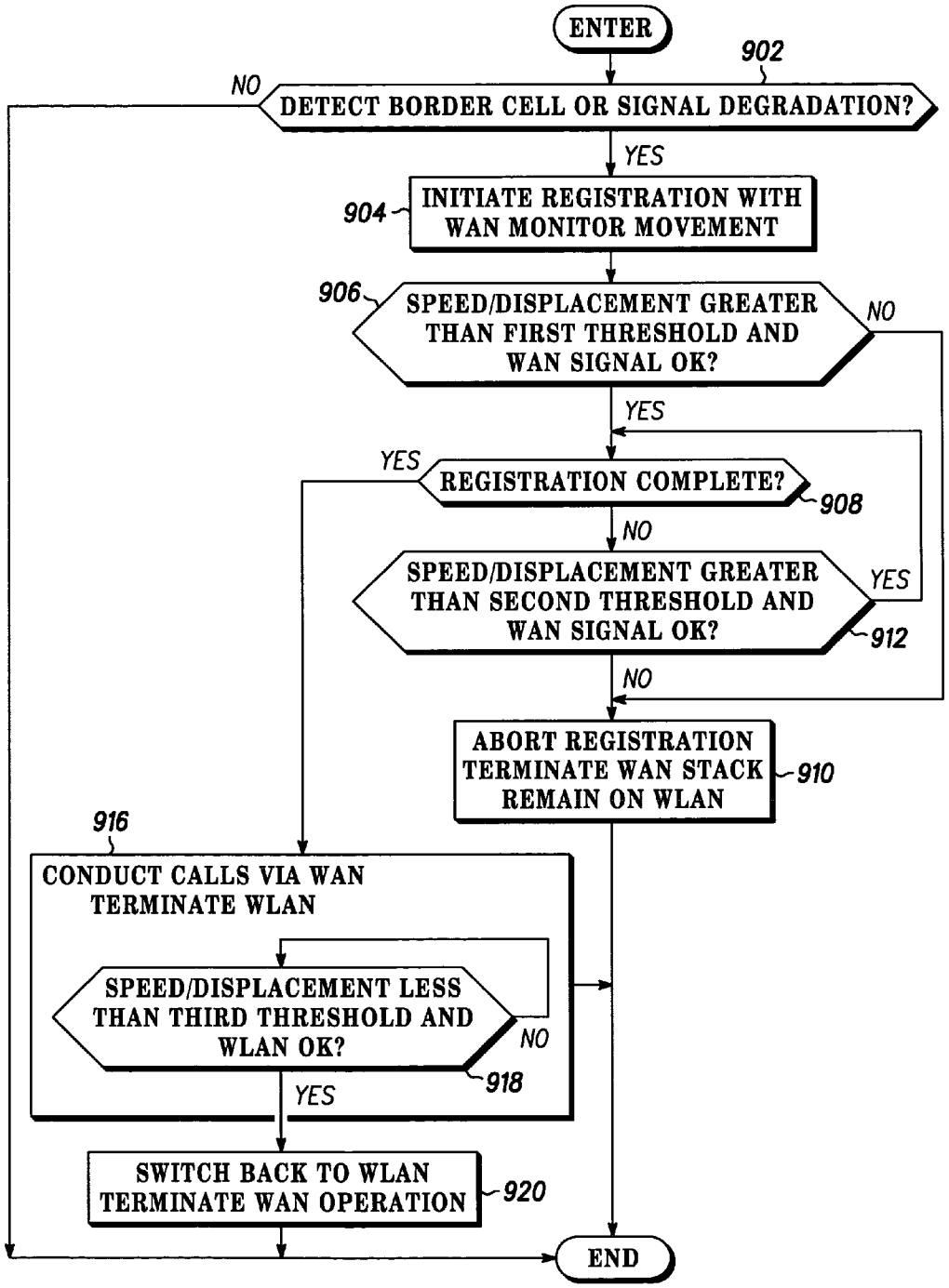
ENTER
902
DETECT BORDER CELL OR SIGNAL DEGRADATION?
NO
YES
904
INITIATE REGISTRATION WITH WAN MONITOR MOVEMENT
906
SPEED/DISPLACEMENT GREATER THAN FIRST THRESHOLD AND WAN SIGNAL OK?
NO
YES
YES
REGISTRATION COMPLETE?
908
NO
SPEED/DISPLACEMENT GREATER THAN SECOND THRESHOLD AND WAN SIGNAL OK?
YES
912
NO
ABORT REGISTRATION TERMINATE WAN STACK REMAIN ON WLAN
910
916
CONDUCT CALLS VIA WAN TERMINATE WLAN
SPEED/DISPLACEMENT LESS THAN THIRD THRESHOLD AND WLAN OK?
NO
918
YES
SWITCH BACK TO WLAN TERMINATE WAN OPERATION
920
END

FIG. 9 900

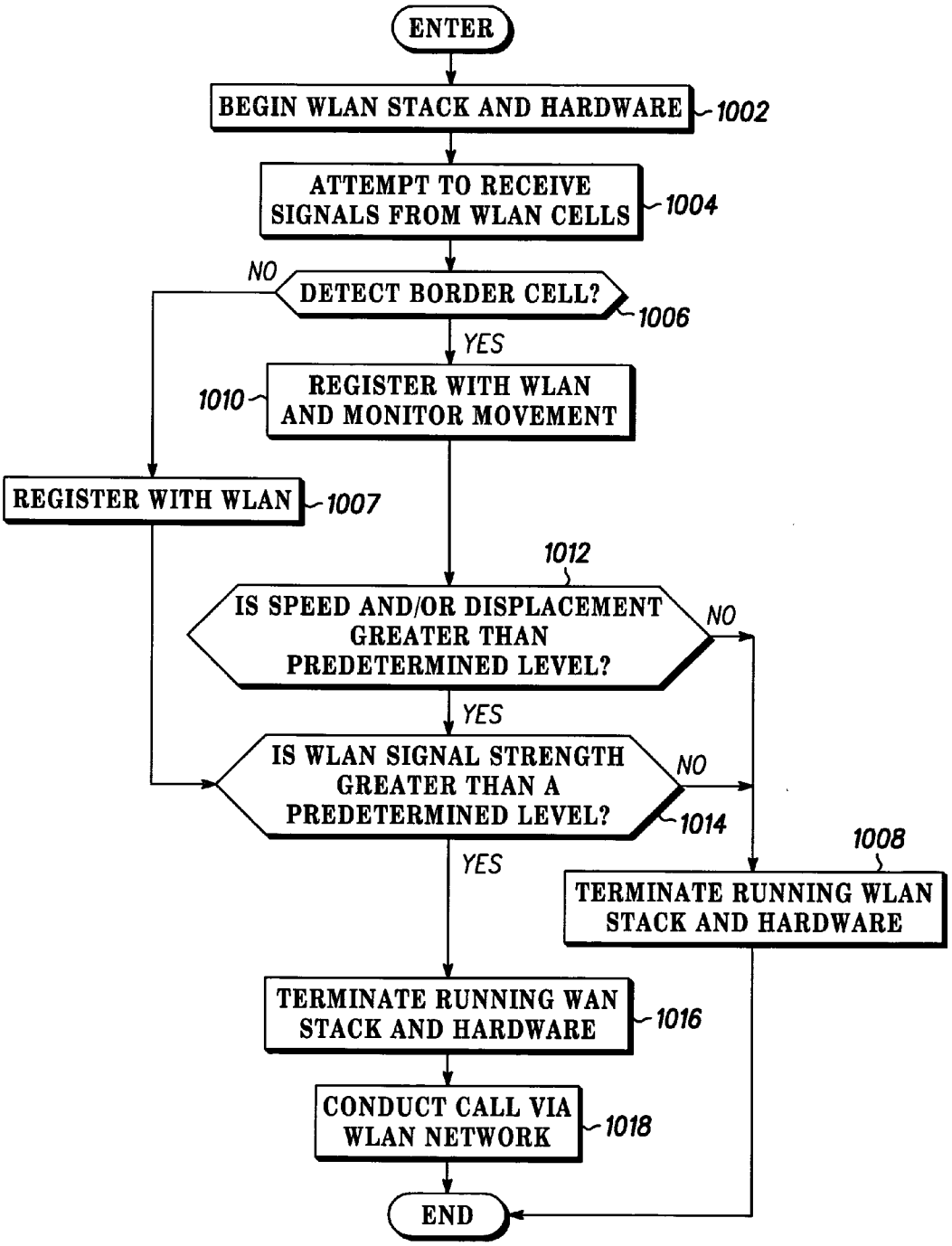
ENTER
BEGIN WLAN STACK AND HARDWARE
1002
ATTEMPT TO RECEIVE SIGNALS FROM WLAN CELLS
1004
NO
DETECT BORDER CELL?
1006
YES
1010
REGISTER WITH WLAN AND MONITOR MOVEMENT
REGISTER WITH WLAN
1007
1012
IS SPEED AND/OR DISPLACEMENT GREATER THAN PREDETERMINED LEVEL?
NO
YES
IS WLAN SIGNAL STRENGTH GREATER THAN A PREDETERMINED LEVEL?
NO
1014
YES
1008
TERMINATE RUNNING WLAN STACK AND HARDWARE
TERMINATE RUNNING WAN STACK AND HARDWARE
1016
CONDUCT CALL VIA WLAN NETWORK
1018
END

FIG. 10 1000

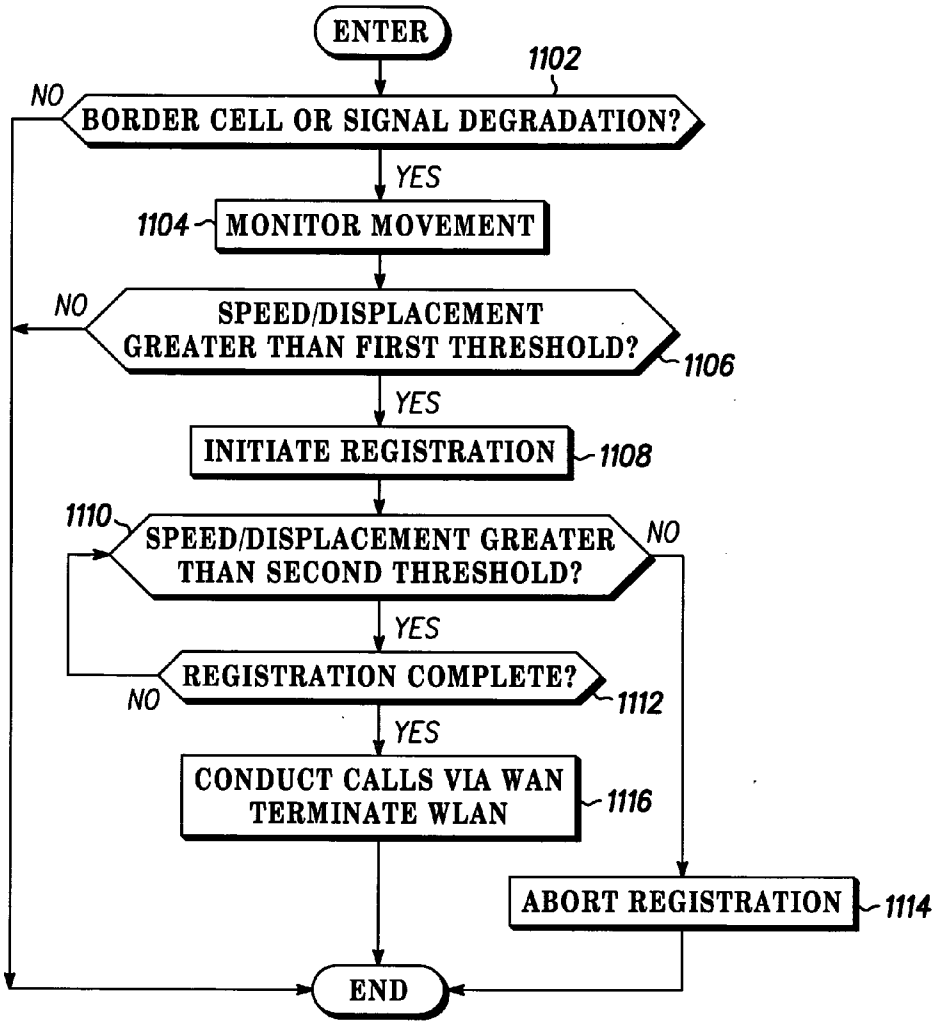
ENTER
1102
NO
BORDER CELL OR SIGNAL DEGRADATION?
YES
1104
MONITOR MOVEMENT
NO
SPEED/DISPLACEMENT GREATER THAN FIRST THRESHOLD?
1106
YES
INITIATE REGISTRATION
1108
1110
SPEED/DISPLACEMENT GREATER THAN SECOND THRESHOLD?
NO
YES
REGISTRATION COMPLETE?
NO
1112
YES
CONDUCT CALLS VIA WAN TERMINATE WLAN
1116
ABORT REGISTRATION
1114
END

FIG. 11 1100

SYSTEM AND METHOD TO IMPROVE WLAN HANDOVER BEHAVIOR AND PHONE BATTERY LIFE WHEN STATIONARY IN BORDER CELLS

CROSS-REFERENCE TO RELATED APPLICATION

[0001] The present patent application is related to co-pending and commonly owned U.S. patent application Ser. No. _____, Attorney Docket No. CE10823N, entitled "SYSTEM AND METHOD TO IMPROVE WLAN HANDOVER BEHAVIOR AT ENTRY/EXIT POINTS", filed on even date with the present patent application, the entire teachings of which being hereby incorporated by reference.

FIELD OF THE INVENTION

[0002] The present invention generally relates to the field of wireless communications, and more particularly relates to a system and method to improve handover and registration behavior between WLANs and WANs and battery life of a mobile device when a user is stationary in border cells.

BACKGROUND OF THE INVENTION

[0003] Many cellular communication systems consist of a combination of different types of systems and protocols. Likewise, many of the devices used on these networks, such as cellular telephones and handheld personal data assistants, are designed to be multi-mode devices, i.e. will operate on multiple networks. Ideally, there should be no degradation or otherwise negative indication that a device is on one network or another to an end user. However, certain factors do affect performance on different networks. Battery life may be degraded on one system in comparison to another as the hardware required to operate in that particular mode may consume more energy than in another mode. Also, cost may be significantly different from one system to another and the subscriber may pay a premium to be able to use a particular network.

[0004] Many locations, such as workplaces and universities, are beginning to deploy wireless local area networks (WLANs) within a particular site or building. For these systems, devices having multi-mode operation will operate on the WLAN while within the building or site and switch over to a macro or wide area network (WAN), such as a GSM (Global System for Mobile communications), CDMA (Code Division Multiple Access (CDMA), iDEN (integrated Digital Enhanced Network) or TDMA (Time Division Multi-Access) cellular system, when the user leaves the coverage area of the WLAN. While on the WLAN system, calls are made using Voice-over-IP which provides a great cost savings for both the user and the cellular system.

[0005] In order for this multi-mode system to be effective, it is desirable to have a seamless integration between systems. It is critical to be able to transfer a call in progress on one system over to a different system without a noticeable consequence to the end user, such as a lost call, an unnecessary charge, significant reduction in battery life, etc. In most instances, the burden to decide when to hand over to the other system is placed upon the actual subscriber device.

[0006] Several techniques exist for making the handover decision. The first, most obvious method is a "brute force" method as illustrated in **FIG. 1**. A typical cellular communications system consisting of overlapping WAN cells **102**, with a concentration of overlapping WLAN cells **104** within a building **108** is shown. While within the area of WLAN coverage, the mobile subscriber device **106** is continually running the hardware and software stack for both systems. This insures that whenever the user leaves coverage of the WLAN system, the call is handed over to the WAN system with no noticeable interruption to the user. The problem with this method is that there is significant detrimental effect on battery life because the device must operate both sets of hardware simultaneously. Moreover, there is an inherent degradation in battery life of these devices in comparison to single-mode devices due to the additional current drain required by the WLAN chipsets. While there may be a cost savings for calls made on the WLAN system, this advantage is offset by the loss in battery life.

[0007] A prior art system that uses a more intelligent handover method is shown in **FIG. 2**. In this example, border cells **210** are placed near the entry and exit doors **212** of the building **108**. A border cell **210** generally consists of a WLAN cell with an access point (AP) in the vicinity of an entry and/or exit point **212**. These APs have been designated as border cell **210** APs. A border cell AP transmits information to the subscriber unit (SU) **106** that identifies its cell as a border cell **210**. Normally, before a user is leaving the WLAN coverage area **104**, the user's SU first detects a border cell **210**. The SU **106** starts the cellular stack and begins to register with the cellular network **102** upon detecting the border cell **210** information so that the call is handed over in an adequate timeframe. By the time the SU **106** is out of range of the WLAN coverage area **104**, the call should be transferred to the WAN **102**.

[0008] When a user is leaving the WLAN coverage **104**, the decision to hand over from the WLAN **104** to the macro network or WAN **102** needs to be made early enough to avoid dropping calls due to the rapid falloff of WLAN coverage. Additionally, the handover decision must not be made prematurely to avoid the service cost associated with handing over a subscriber to the macro network **102** when the SU **106** does not actually leave the WLAN coverage area **104**. Similarly, users on calls while exiting the building or taking breaks near the entryways (e.g. smoking near exits in WLAN coverage areas **104**), should not be mistakenly handed over to the WAN **102**.

SUMMARY OF THE INVENTION

[0009] Briefly, in accordance with preferred embodiments of the present invention, disclosed are a system, method and computer readable medium for improving WLAN handover behavior and phone battery life when a user is stationary in border cells. In accordance with a first preferred embodiment of the present invention, a system, computer readable medium, mobile subscriber device operating in a first wireless communication system and method determine that the mobile subscriber device is detecting a triggering event. The triggering event may be the detection of a wireless local area network border cell or the detection of a degradation in signal quality. The method then initiates a registration sequence with a second wireless communication system if the device is detecting the triggering event, determines the speed and/or displacement of the device, and conducts present and subsequent calls via the second wireless communication system if the speed and/or displacement of the device exceed predetermined thresholds.

[0010] Additionally, a second preferred embodiment may abort the cell handover process if at least one of the speed and displacement of the wireless device does not exceed predetermined thresholds. Movement of the wireless device may be determined, for example, by an accelerometer or GPS chipset. The accelerometer preferably detects movement across at least three axes.

[0011] A third preferred embodiment of the invention may handover calls from a wireless local area network (WLAN) to a wide area network (WAN), or vice versa. The WLAN may use protocols such as IEEE Standard 802.11 or Bluetooth. The WAN may use protocols such as those used in cellular systems such as code division multiple access (CDMA), time division multiple access (TDMA), global system for mobile communications (GSM) and integrated digital enhanced network (iDEN).

[0012] An alternative embodiment monitors the speed and displacement of the wireless device before initiating the handover process, and begins the sequence only if the speed and/or displacement exceed the predetermined thresholds.

[0013] The preferred embodiments of the present invention are advantageous because they allow the wireless device to make a more intelligent decision whether to handover a call to another network based on the actual movement of the wireless device. This prevents unnecessary loads on a WAN system, thereby saving cost and increasing the battery life of the device. The benefits are especially noticed by users who spend prolonged periods of time in border cell areas; without the invention, the wireless devices would have to run both a WLAN stack and a cellular (WAN) stack simultaneously.

BRIEF DESCRIPTION OF THE DRAWINGS

[0014] The accompanying figures, where like reference numerals refer to identical or functionally similar elements throughout the separate views and which together with the detailed description below are incorporated in and form part of the specification, serve to further illustrate various embodiments and to explain various principles and advantages all in accordance with the present invention.

[0015] **FIG. 1** is a block diagram illustrating a typical prior art wireless communications system incorporating overlapping WAN cells and WLAN cells.

[0016] **FIG. 2** is a block diagram illustrating a typical prior art wireless communications system incorporating overlapping WAN cells, WLAN cells, and border WLAN cells at building entry points.

[0017] **FIG. 3** is a block diagram illustrating a wireless communications system incorporating overlapping WAN cells, WLAN cells, border WLAN cells at building entry points, and movement-detecting mobile communication devices according to a preferred embodiment of the present invention.

[0018] **FIG. 4** is a block diagram illustrating a movement-detecting mobile communication device, i.e. a wireless device, of the system of **FIG. 3** according to a preferred embodiment of the present invention.

[0019] **FIG. 5** is a block diagram illustrating the contents of an exemplary memory of a movement-detecting mobile communication device of the system of **FIG. 3** according to a preferred embodiment of the present invention.

[0020] **FIG. 6** is an illustration depicting a 4-axis accelerometer geometry used in the movement-detecting mobile communication device of the system of **FIG. 3** according to a preferred embodiment of the present invention. Also, **FIG. 6** shows a 3-axis accelerometer geometry for comparison with the **4**-axis accelerometer geometry.

[0021] **FIGS. 7, 8, 9, 10** and **11** are operational flow diagrams illustrating portions of a handover process between a WLAN and a WAN according to a preferred embodiment of the present invention.

DETAILED DESCRIPTION

[0022] As required, detailed embodiments of the present invention are disclosed herein; however, it is to be understood that the disclosed embodiments are merely exemplary of the invention, which can be embodied in various forms. Therefore, specific structural and functional details disclosed herein are not to be interpreted as limiting, but merely as a basis for the claims and as a representative basis for teaching one skilled in the art to variously employ the present invention in virtually any appropriately detailed structure. Further, the terms and phrases used herein are not intended to be limiting; but rather, to provide an understandable description of the invention.

[0023] The terms "a" or "an", as used herein, are defined as one or more than one. The term plurality, as used herein, is defined as two or more than two. The term another, as used herein, is defined as at least a second or more. The terms including and/or having, as used herein, are defined as comprising (i.e., open language). The term coupled, as used herein, is defined as connected, although not necessarily directly, and not necessarily mechanically. The terms program, software application, and the like as used herein, are defined as a sequence of instructions designed for execution on a computer system. A program, computer program, or software application may include a subroutine, a function, a procedure, an object method, an object implementation, an executable application, an applet, a servlet, a source code, an object code, a shared library/dynamic load library and/or other sequence of instructions designed for execution on a computer system.

[0024] The present invention, according to a preferred embodiment, advantageously overcomes problems with the prior art by proposing the detection of movement of a mobile communications device through a WLAN border cell to initiate the process of handing over a mobile communications device from one system to another, as will be discussed below.

[0025] Referring now to **FIG. 3**, a preferred embodiment of the present invention consists of overlapping WAN cells **102**, with a concentration of overlapping WLAN cells **104** within a building **108** as shown. The WLAN cells **104** may be any of a number of different wireless protocols such as IEEE Standard 802.11 or Bluetooth. The mobile subscriber unit (SU) **306** contains a means for detecting movement of the SU **306** such as an accelerometer **314**. Alternatively, the SU **306** may contain hardware for use with a Global Positioning System (GPS). While placing a call, the SU **306** uses the movement information from the accelerometer **314** in

conjunction with knowledge that the SU **306** is detecting a WLAN border cell **210** to determine the most appropriate network for that call.

[**0026**] A block diagram of an exemplary mobile subscriber device (SU) **306** is shown in **FIG. 4**. The SU **306** contains two sets of transceivers—one for the WLAN system and one for the WAN system, each transceiver containing an antenna **402**, **408**, an RF front end **404**, **410**, and a decoder/encoder **406**, **412** respectively, designed to transmit, receive, encode and decode wireless signals for the frequencies and characteristics of its corresponding system. Wherever possible, the two antennas **402**, **408**, front ends **404**, **410** and decoder/encoders **406**, **412** could also be implemented with common, shared hardware and software.

[**0027**] The mobile subscriber unit **306** also includes one or more processors **418** which processes instructions, performs calculations, and manages the flow of information through the SU **306**. The SU **306** also includes a main memory **414** containing a program memory and a data memory, preferably random access memory (RAM), and may also include a secondary memory **415**. Additionally, the processor **418** is communicatively coupled with the main memory **414**. Included within the main memory **414**, shown in more detail in **FIG. 5**, are a user interface **502**, a handover manager **514** (to be discussed in more detail later), operating system platform **504**, a cellular stack **508**, a WLAN stack **510** and glue software **506**. The operating system platform **504** manages resources, such as the message data **512** stored in data memory, the scheduling of tasks, and processes the operation of the cellular stack **508**, the WLAN stack **510**, and the handover manager **514** in the main memory **414**.

[**0028**] The operating system platform **504** also manages a graphical and/or character-based display interface **421** (**FIG. 4**) that, according to the present example, is communicatively coupled to a display screen **422**. Information is displayed to a user of the SU **306** via the screen **422**, for visual output of information, and a speaker **426**, for audible output. A user input interface **502** is communicatively coupled with a keypad **424** and a microphone **428** for receiving user input from a user of the SU **306**. Additionally, the operating system platform **504** also manages many other basic tasks of the subscriber unit **306** in a manner well known to those of ordinary skill in the art.

[**0029**] Glue software **506** (**FIG. 5**) may include drivers, stacks, and low-level application programming interfaces (API's) and provides basic functional components for use by the operating system platform **504** and by compatible applications that run on the operating system platform **504** for managing communications with resources and processes in the subscriber unit **306**.

[**0030**] Various software embodiments are described in terms of this exemplary computer system. After reading this description, it will become apparent to a person of ordinary skill in the relevant art(s) how to implement the invention using other computer systems and/or computer architectures.

[**0031**] The exemplary mobile subscriber unit **306** also contains a power source **420** for powering the device, such as a battery, DC adapter, or AC adapter. Please note that the power source **420** provides power to the entire mobile subscriber unit **306**, however, for purposes of clarity, it is only shown connected to the processor/controller **418** in **FIG. 4**. This description should be obvious to those skilled in the art.

[**0032**] In alternative embodiments, the secondary memory **415** may include other similar means for allowing computer programs or other instructions to be loaded into the SU **306**. Such means may include, for example, a removable storage unit and an interface (not shown). Examples of such may include a program cartridge and cartridge interface (such as that found in video game devices), a removable memory chip (such as an EPROM, or PROM) and associated socket, and other removable storage units and interfaces that allow software and data to be transferred from the removable storage unit to the SU **306**.

[**0033**] In this document, the terms "computer program medium,""computer-usable medium,""machine-readable medium" and "computer-readable medium" are used to generally refer to media such as main memory **414** and secondary memory **415**, removable storage drive, a hard disk installed in hard disk drive, and signals. These computer program products are means for providing software to the mobile subscriber unit **306**. The computer-readable medium allows the SU **306** to read data, instructions, messages or message packets, and other computer-readable information from the computer-readable medium. The computer-readable medium, for example, may include non-volatile memory, such as Floppy, ROM, Flash memory, Disk drive memory, CD-ROM, and other permanent storage. It is useful, for example, for transporting information, such as data and computer instructions, between computer systems. Furthermore, the computer-readable medium may comprise computer-readable information in a transitory state medium such as a network link and/or a network interface, including a wired network or a wireless network, that allow a computer to read such computer-readable information.

[**0034**] Many devices, including some mobile subscriber devices and audio-visual remote controls, use piezo accelerometers to save power by waking up (e.g. activating the human interface) only when the device senses motion. Typically single axis accelerometers are used in combination with a threshold acceleration value that indicates the user intends to use the device. This is not sufficient for the WLAN case where it is necessary to determine if absolute movement of the device on a large scale is occurring, as opposed to moving the device a short distance from its previous location to the user's face. For example, for workers in the coverage area of WLAN border cells **210**, when a call is started (which can be detected by a currently known approach) the SU **306** does not want to start the handover process unless the user starts to move a substantial distance away from his desk, as opposed to merely walking around his desk. A change in location, such as on the order of the distance defined by two or more workspace areas, preferably is detectable by the SU **306**. Likewise, and perhaps more importantly, for individuals that tend to leave the building **108** for a break outside an entry-exit point **212** (the smoker scenario), the SU **306** would normally determine if gross movement has ceased. This avoids a more costly step (from a power and airtime perspective) of placing the inbound handover call on the WAN from the enterprise PBX.

[**0035**] According to a preferred embodiment, the addition of a 4-axis piezo accelerometer **314** (**FIG. 3**) in the SU **306**

allows it to make intelligent call handover, call initiation and registration decisions (begin handover, and abort registration) based on whether or not the SU **306** is in gross translation to determine how far (and fast) the SU **306** is traveling when in a border cell **210**. A 4-axis accelerometer **314** can be constructed to allow the computation of both translational and rotational movement. Normally the approach is to arrange **4** single axis devices along the lines originating from the center of a solid defined by a tetrahedron, that pass through the centroid of each of the tetrahedron's four triangular faces as shown in **FIG. 6**. Note that the distance of the individual single axis devices from the center of the tetrahedron are not required to be equal for all the single axis devices, and there are multiple orientations of the individual accelerometer's detection axis normal to the 4 axes defined by the tetrahedron that can be used. By knowing the relationships of the 4 devices in 3-space, the movement and rotation of the device can be accurately computed accounting for any differences in placement dictated by the physical envelop defined by the phone's housing. It should be noted that translational movement alone may be determined using a 3-axis accelerometer such as the commercially available LIS3L02, manufactured by STMicroelectronics. This single chip approach allows for a simpler integration into the mobile device **306** and should be sufficient for determining gross movement or displacement in most instances. The four-axis tetrahedron arrangement and a three-axis cube arrangement are both shown for comparison in **FIG. 6**.

[**0036**] **FIGS. 7, 8, 9, 10** and **11** are exemplary operational flow diagrams of the system of **FIG. 3**. **FIGS. 7-9** and **11** outline the steps necessary for moving from an area of WLAN coverage to that of WAN coverage. **FIG. 10** illustrates a method for moving from WAN coverage into WLAN coverage.

[**0037**] In **FIG. 7**, a preferred method is triggered at step **702** when the handover manager **514** (**FIG. 5**) detects the presence of a WLAN border cell **210**, or a degradation in signal quality of the WLAN coverage. It is important to note at this time that the unit **306** will execute this routine periodically when a call is not in progress, and will increase the frequency of running this routine during a call. At step **704**, the unit has detected the border cell **210** or WLAN signal degradation and initiates registration with the WAN system. The subscriber unit **306** then begins to monitor the movement of the device **306**, at step **706**, by computing the relative location of the phone over time from acceleration information. For example, walking around one's office would not constitute gross movement, while moving a distance equivalent to a number of workspaces would. This information may be obtained from an accelerometer **314**, or alternatively, from a GPS chipset. If the speed and/or displacement information exceeds a predetermined threshold, at step **708**, then the present or subsequent calls are conducted via the WAN system, at step **710**. The unit **306** may then terminate running the WLAN stack and hardware, at step **712**, thereby saving battery life. If the speed and/or displacement information does not exceed a predetermined threshold, at step **708**, the unit **306** exits the process and continues to conduct the present or subsequent calls via the WLAN system.

[**0038**] The process illustrated in **FIG. 8** further expands upon the method of the handover manager **514** presented in **FIG. 7**. Again, the subscriber unit **306** attempts to detect the presence of a border cell **210** or degradation in signal quality of the WLAN coverage at step **802**. If the border cell **210** or WLAN signal degradation is detected, then the unit **306** initiates the registration sequence with the WAN system and begins to monitor the movement of the device **306**, at step **804**. Note that hereafter, the process of initiating the registration sequence with a communications system, be it a cellular (WAN) system or a local area (WLAN) system, includes the steps necessary to bring up the corresponding hardware and software for that system. In this example, if either the speed and/or displacement of the device **306** do not exceed a first predetermined threshold or the strength of the WAN signal is unacceptable, at step **806**, then the registration sequence is aborted (the unit stops running the WAN stack **510** and hardware **410**, **412**) at step **810** and the process is exited, resulting in a current and/or future calls continuing to be placed via the WLAN system. However, if the speed and/or displacement of the device **306** do exceed the first predetermined threshold and the signal strength of the WAN signal is still good, at step **806**, then the device checks to see if the registration sequence has been completed, at step **808**. If the registration sequence has not completed, the unit will continue to monitor the speed and/or displacement of the device and the strength of the WAN signal while checking whether the registration is completed, at step **812**, and will abort, at step **810**, at any time during the registration sequence if the speed and/or displacement of the device **306** do not exceed a second predetermined threshold or the signal strength of the WLAN falls below a predetermined level. When the registration sequence is completed, the unit will conduct any present call and subsequent calls via the WAN system, at step **814**, and will terminate running the WLAN stack **510** and hardware **404**, **406**. This method saves battery life by both aborting the handover to the WAN when unnecessary, and terminating the WLAN stack and hardware when the call is transferred to the WAN system.

[**0039**] The method described in the previous paragraph is again expanded upon in **FIG. 9**. Again, the subscriber unit **306** attempts to detect the presence of a border cell **210** or a degradation in signal quality of the WLAN coverage, at step **902**. If the border cell **210** or WLAN signal degradation is detected, then the unit **306** initiates the registration sequence with the WAN system, at step **904**, begins to monitor the movement of the device **306**. If the speed and/or displacement of the device **306** do not exceed a first predetermined threshold or the strength of the WAN signal falls below an accepted level, at step **906**, then the initiation of registration is aborted, at step **910**, and the WAN stack and hardware are terminated, ending the process and resulting in any present and/or subsequent call being conducted via the WLAN. If the speed and/or displacement of the device **306** do exceed the predetermined threshold and the WAN signal is at an acceptable level at step **906**, then the device checks to see if the registration sequence has been completed, at step **908**. The unit will continue to monitor the movement of the wireless device **306** until the registration is completed and will abort (proceed to step **910**) at any time during the registration sequence if the speed and/or displacement of the device **306** do not exceed a second predetermined threshold or the WAN signal strength is unacceptable, at step **912**. After the registration sequence has ended, at step **908**, the unit **306** will conduct any present and/or subsequent calls via

the WAN system, at step **916**, and also terminates running the WLAN stack **510** and hardware **404**, **406**.

[**0040**] The unit **306** will continue to perform one or more checks of the movement at step **918**. If the speed and/or displacement of the device **306** is less than a third predetermined threshold and the WLAN coverage is acceptable, at step **918**, the unit deregisters from the WAN and stops running the WAN stack **510** and hardware **410**, **412**, at step **920**, and the process ends. This method provides the battery saving features of the previously described procedures, but provides more certainty that the device **306** is actually moving through the border cell away from the WLAN coverage and that the user is not taking a breaks near an entryway (e.g. smoking near exits in WLAN coverage areas **104**).

[**0041**] Alternative methods may include monitoring the speed and displacement of the device before initiating the WAN registration process, and beginning the sequence only if the speed and/or displacement exceed the predetermined thresholds. This presents further benefits to the phone battery life and the WAN system demands in that the unit **306** does not even start the WAN stack **510** and hardware **410**, **412**, or burden the WAN system unnecessarily until sufficient movement has been detected.

[**0042**] The operational flow diagram of **FIG. 11** illustrates an alternative embodiment in which initiating the WAN registration process, and beginning the sequence occurs only if the speed and/or displacement exceed the predetermined thresholds. The subscriber unit **306** attempts to detect a trigger, at step **1102**, such as the presence of a border cell **210**, or a degradation in signal quality of the WLAN coverage. If triggering event is detected, then the unit **306** monitors the movement of the device **306**, at step **1104**. If the speed or displacement does not exceed a first predetermined threshold, at step **1106**, the process ends without ever having to bring up the WAN stack and hardware. Otherwise, the unit **306** initiates the registration sequence, at step **1108**. The unit **306** continues to monitor the movement and if at any time during the registration procedure the speed or displacement is below a second predetermined threshold, at step **1110**, then the registration sequence is aborted, at step **1114**. When the registration sequence has finished ("yes" path out of step **1112**), the unit **306** switches to the WAN network and any present or subsequent calls are conducted via the WAN, at step **1116**. The unit **306** also terminates the WLAN stack and hardware.

[**0043**] In yet another alternative embodiment, the steps **1102** and **1106** in **FIG. 11** are performed in a slightly different order. In this embodiment, the unit **306** continuously monitors the speed or displacement of the unit **306**, at step **1104**. Only if the speed or displacement exceeds a first predetermined threshold, at step **1106**, does the unit **306** attempts to detect a trigger, at step **1102**, such as the presence of a border cell **210**, or a degradation in signal quality of the WLAN coverage. If a trigger is detected, the unit **306** initiates a registration with the WAN, at step **1108**, and continues the operational flow described above.

[**0044**] Prior art methods may be used in conjunction with the present invention to provide hysteresis to avoid a condition in which a wireless device **306** keeps switching back and forth between the WAN and WLAN. This includes the use of multiple thresholds, as shown in **FIG. 8** and **FIG. 10** and the use of timers that force the wireless device **306** to stay registered with a first system for a minimum duration before it is allowed to switch to a second one (provided there is coverage from the first system).

[**0045**] **FIG. 10** illustrates a procedure used by the subscriber device **306** when moving from WAN coverage to WLAN coverage. From time to time, while on the WAN network, the unit **306** will execute this process in order to check for coverage of the WLAN system. As with the previously described methods, this process will run more often during a call than when idle (not on a call). The unit **306** enters the method, at step **1002** where it begins running the WLAN stack **510** and its associated hardware **404**, **406**. The unit then attempts to receive signals from WLAN cells at step **1004**. If the unit detects a WLAN border cell, at step **1006**, then the unit **306** registers with the WLAN and begins to monitor its movement, at step **1010**. Otherwise, if the unit **306** determines that the unit is within a normal WLAN cell **104**, the unit will immediately register with the WLAN, at step **1007**, and begin to handover any current call(s) to the WLAN system, (i.e. the unit will bypass the steps for checking the movement and skip ahead to step **1014**). For a unit **306** that detects a border cell, if the speed and/or displacement exceed predetermined thresholds, at step **1012**, then the unit will check the signal strength of the WLAN signal, at step **1014**. Otherwise, the unit **306** again terminates running the WLAN stack **510** and hardware **404**, **406**, at step **1008**, if either the movement information or the WLAN signal strength is insufficient to warrant a handover. If all the conditions are met (i.e. sufficient signal strength, necessary movement conditions within border cell coverage) then the unit **306** will terminate running the WAN stack **508** and hardware **410**, **412**, at step **1016**, and conducts any present and/or subsequent calls via the WLAN system, at step **1018**.

[**0046**] The present invention can be realized in hardware, software, or a combination of hardware and software. An embodiment of the present invention can also be embedded in a computer program product, which comprises all the features enabling the implementation of the methods described herein, and which, when loaded in a computer system, is able to carry out these methods. Computer program means or computer program as used in the present invention indicates any expression, in any language, code or notation, of a set of instructions intended to cause a system having an information processing capability to perform a particular function either directly or after either or both of the following a) conversion to another language, code or, notation; and b) reproduction in a different material form.

[**0047**] A computer system may include, inter alia, one or more computers and at least a computer-readable medium, allowing a computer system, to read data, instructions, messages or message packets, and other computer-readable information from the computer-readable medium. The computer-readable medium may include non-volatile memory, such as ROM, Flash memory, Disk drive memory, CD-ROM, and other permanent storage. Additionally, a computer-readable medium may include, for example, volatile storage such as RAM, buffers, cache memory, and network circuits. Furthermore, the computer-readable medium may comprise computer-readable information in a transitory state medium such as a network link and/or a network interface,

including a wired network or a wireless network, that allow a computer system to read such computer-readable information.

[0048] Computer programs (also called computer control logic) are stored in main memory **414** and/or secondary memory. Computer programs may also be received "over-the-air" via one or more wireless receivers. Such computer programs, when executed, enable the subscriber unit **306** to perform the advantageous features of the present invention as discussed herein. In particular, the computer programs, when executed, enable the processor **418** to perform the features of the subscriber unit **306**. Accordingly, such computer programs represent controllers of the subscriber unit **306**.

[0049] The novel system and related methods for improving WLAN handover behavior and phone battery life provide significant advantages for dual-mode cellular communication systems (WLAN/WAN systems), such as improving the reliability of the handover, thereby allowing for significant cost savings by allowing more calls to be made over the WLAN. The WAN system will no longer be burdened with the unnecessary load of placing calls for users that remain within the WLAN coverage even though they are using the border cells. Users who work or are inside WLAN border cells for significant periods of time will especially benefit from the novel system and methods of the present invention. The actual phone will benefit from improved battery life for these users as it decreases the time required for the units to run the hardware and software for each system simultaneously. Since portable wireless devices, cellular telephones, and two-Way radios, are incorporating motion detecting devices more frequently, these types of devices will particularly benefit from the preferred embodiments of the present invention as has been discussed above.

[0050] Although specific embodiments of the invention have been disclosed, those having ordinary skill in the art will understand that changes can be made to the specific embodiments without departing from the spirit and scope of the invention. The scope of the invention is not to be restricted, therefore, to the specific embodiments. Furthermore, it is intended that the appended claims cover any and all such applications, modifications, and embodiments within the scope of the present invention.

[0051] What is claimed is:

1. A method comprising:

determining that a wireless device operating in a first wireless communication system is detecting a triggering event;

initiating a registration sequence with a second wireless communication system in response to determining that the wireless device is detecting the triggering event;

determining at least one of a speed and a displacement of the wireless device; and

conducting at least one of a current call and a subsequent call via the second wireless communication system in response to determining that at least one of the speed and displacement of the wireless device exceeds a first predetermined threshold.

2. The method of claim 1, wherein the triggering event is at least one of a detection of a wireless local area network border cell and a detection of a degradation of signal quality.

3. The method of claim 2, wherein the first wireless communication system is a wireless local area network (WLAN) and the second wireless communication system is a wide area network (WAN).

4. The method of claim 3, wherein the wireless local area network (WLAN) uses at least one protocol of IEEE Standard 802.11 and Bluetooth.

5. The method of claim 3, wherein the wide area network (WAN) uses at least one protocol of code division multiple access (CDMA), time division multiple access (TDMA), global system for mobile communications (GSM) and integrated digital enhanced network (iDEN).

6. The method of claim 2, wherein the first wireless communication system is a wide area network (WAN) and the second wireless communication system is a wireless local area network (WLAN).

7. The method of claim 6, wherein the wireless local area network (WLAN) uses at least one protocol of IEEE Standard 802.11 and Bluetooth.

8. The method of claim 6, wherein the wide area network (WAN) uses at least one protocol of code division multiple access (CDMA), time division multiple access (TDMA), global system for mobile communications (GSM) and integrated digital enhanced network (iDEN).

9. The method of claim 2, further comprising:

aborting the registration sequence in response to determining that at least one of the speed and displacement of the wireless device does not exceed a second predetermined threshold.

10. The method of claim 2, further comprising:

deregistering from the second wireless communication system in response to determining that at least one of the speed and displacement of the wireless device does not exceed a third predetermined threshold.

11. The method of claim 2, wherein the determining at least one of a speed and a displacement of the wireless device step is performed by movement detecting means of the wireless device.

12. The method of claim 11, wherein the movement detecting means comprises at least one of an accelerometer detecting means and a global positioning system means.

13. The method of claim 12, wherein the accelerometer detecting means comprises at least three independent axes.

14. A method comprising:

determining that a wireless device operating in a first wireless communication system is detecting a triggering event;

measuring at least one of a speed and a displacement of the wireless device;

initiating a registration sequence with a second wireless communication system in response to determining that the wireless device is detecting a triggering event and measuring at least one of the speed and displacement of the wireless device exceeding a first predetermined threshold; and

conducting current and subsequent calls via the second wireless communication system.

15. The method of claim 14, wherein the triggering event is at least one of a detection of a wireless local area network border cell and a detection of a degradation of signal quality.

16. The method of claim 15, further comprising:

aborting the registration sequence in response to determining that at least one of the speed and displacement of the wireless device does not exceed a second predetermined threshold.

17. The method of claim 15, further comprising:

deregistering from the second wireless communication system in response to determining that at least one of the speed and displacement of the wireless device does not exceed a second predetermined threshold.

18. A mobile communication device comprising:

at least two transceivers, each transceiver designed to operate on a separate wireless communications system, for transmitting and receiving wireless information;

a controller, communicatively coupled to each transceiver, for managing the operation of the mobile communication device;

a first wireless communications system stack, communicatively coupled to the controller, having instructions for communicating according to its respective protocol;

a second wireless communications system stack, communicatively coupled to the controller, having instructions for communicating according to its respective protocol;

a means for measuring speed and displacement of the wireless device, communicatively coupled to the controller; and

a handover manager, communicatively coupled to the controller, the first wireless communications system stack, the second wireless communications system stack, and the means for measuring speed and displacement of the wireless device, the handover manager for determining when to handover from the first wireless communication system to the second wireless communication system in response to determining that the wireless device is in communication with a wireless local area network border cell and that at least one of the speed and displacement of the device exceed a first predetermined threshold.

19. The device of claim 18, wherein the means for measuring speed and displacement of the device comprises at least one of an accelerometer detecting means and a global positioning system detecting means.

20. The device of claim 19, wherein the accelerometer detecting means comprises at least three independent axes.

21. A mobile communication system comprising:

at least one cell of a wireless local area network communications system, the at least one cell providing communication coverage within a structure having at least one egress point;

at least one coverage cell of a second communications system, overlapping the at least one cell of a wireless local area network, for providing communication coverage outside the structure;

at least one border cell of a wireless local area network communications system, the border cell located at the egress point of the structure, providing a transition area from the wireless local area network communications system and the second communications system; and

at least one mobile subscriber device, communicatively coupled with the at least one cell of the wireless local area network communications system, the at least one coverage cell of the second communications system, and the at least one border cell of a wireless local area network communications system, the at least one mobile subscriber device determining when to handover from one wireless communication system to the second wireless communication system in response to determining that the device is in communication with a wireless local area network border cell and that at least one of the speed and displacement of the device exceed a predetermined threshold.

22. A computer readable medium comprising computer instructions for performing the steps of:

determining that a wireless device operating in a first wireless communication system is detecting a triggering event;

initiating a registration sequence with a second wireless communication system in response to determining that the wireless device is detecting the triggering event;

determining at least one of a speed and a displacement of the wireless device; and

conducting current and subsequent calls via the second wireless communication system in response to determining that at least one of the speed and displacement of the wireless device exceeds a first predetermined threshold.

23. The computer readable medium of claim 22, wherein the triggering event is at least one of a detection of a wireless local area network border cell and a detection of a degradation of signal quality.

24. The computer readable medium of claim 23, further comprising:

aborting the registration sequence in response to determining that at least one of the speed and displacement of the wireless device does not exceed a second predetermined threshold.

25. The computer readable medium of claim 23, further comprising:

deregistering from the second wireless communication system in response to determining that at least one of the speed and displacement of the wireless device does not exceed a third predetermined threshold.

26. The computer readable medium of claim 23, wherein the determining at least one of a speed and a displacement of the wireless device step is performed by movement detecting means of the wireless device.

27. The computer readable medium of claim 26, wherein the movement detecting means comprises at least one of an accelerometer detecting means and a global positioning system means.

28. A computer readable medium comprising computer instructions for performing the steps of:

determining that a wireless device operating in a first wireless communication system is detecting a triggering event;

measuring at least one of a speed and a displacement of the wireless device;

initiating a registration sequence with a second wireless communication system in response to determining that the wireless device is detecting a triggering event and measuring at least one of the speed and displacement of the wireless device exceeding a first predetermined threshold; and

conducting current and subsequent calls via the second wireless communication system.

29. The computer readable medium of claim 28, wherein the triggering event is at least one of a detection of a wireless local area network border cell and a detection of a degradation of signal quality.

* * * * *