US 20050063348A1

(19) United States

(12) Patent Application Publication

(10) Pub. No.: US 2005/0063348 A1

(43) Pub. Date: Mar. 24, 2005

Donovan

(54) WIRELESS LOCAL AREA NETWORK AD-HOC MODE FOR REDUCING POWER CONSUMPTION

(75) Inventor: **Timothy Donovan**, Livermore, CA (US)

Correspondence Address:
MARVELL SEMICONDUCTOR, INC.
INTELLECTUAL PROPERTY DEPARTMENT
700 FIRST AVENUE, MS# 509
SUNNYVALE, CA 94089 (US)

(73) Assignee: **Marvell International Ltd.**, Hamilton HM DX (BM)

(21) Appl. No.: **10/665,252**

(22) Filed: **Sep. 19, 2003**

Publication Classification

(51) **Int. Cl.**[7] **H04Q 7/24**

(52) **U.S. Cl.** **370/338**

(57) **ABSTRACT**

A wireless station communicates with at least one other wireless station in a local area network (LAN). A media access control (MAC) device controls transitions between an active mode and a low power mode. A radio frequency (RF) transceiver communicates with the MAC device and, after the transition to the active mode, transmits data during a predetermined time slot that is assigned to the wireless LAN station and that is not assigned to other wireless LAN stations in the LAN. The RF transceiver receives data from other wireless LAN stations in the LAN during the active mode and transitions to the low power mode after receiving the data from the other wireless LAN stations. The MAC device transitions the wireless LAN station to the active mode prior to a timing beacon and transitions the wireless LAN station to the low power mode prior to a subsequent beacon.

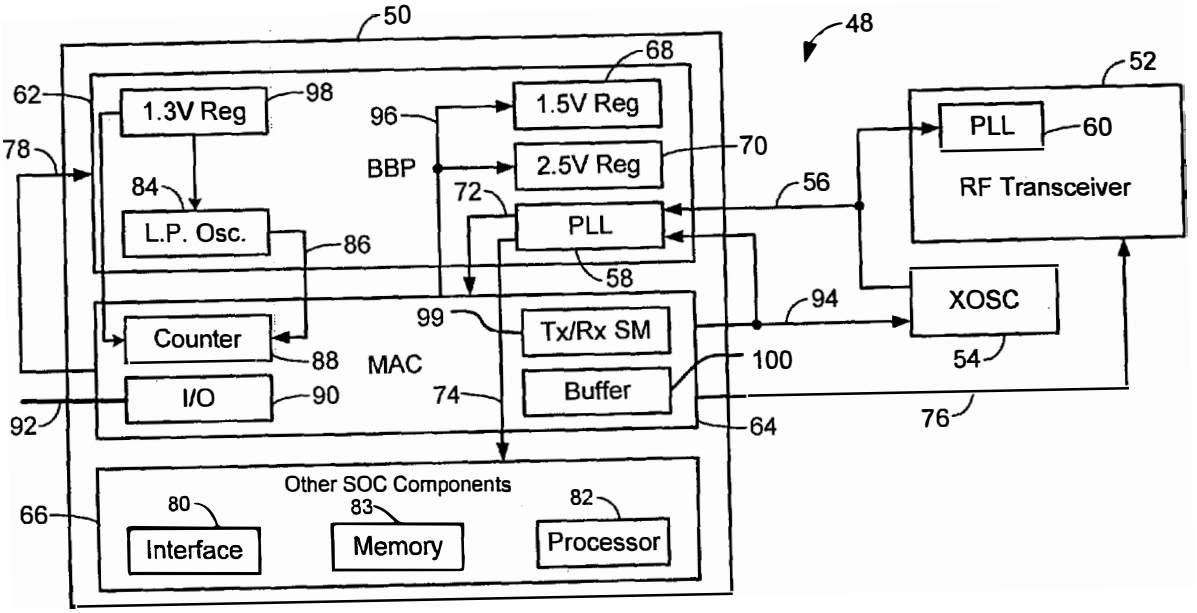

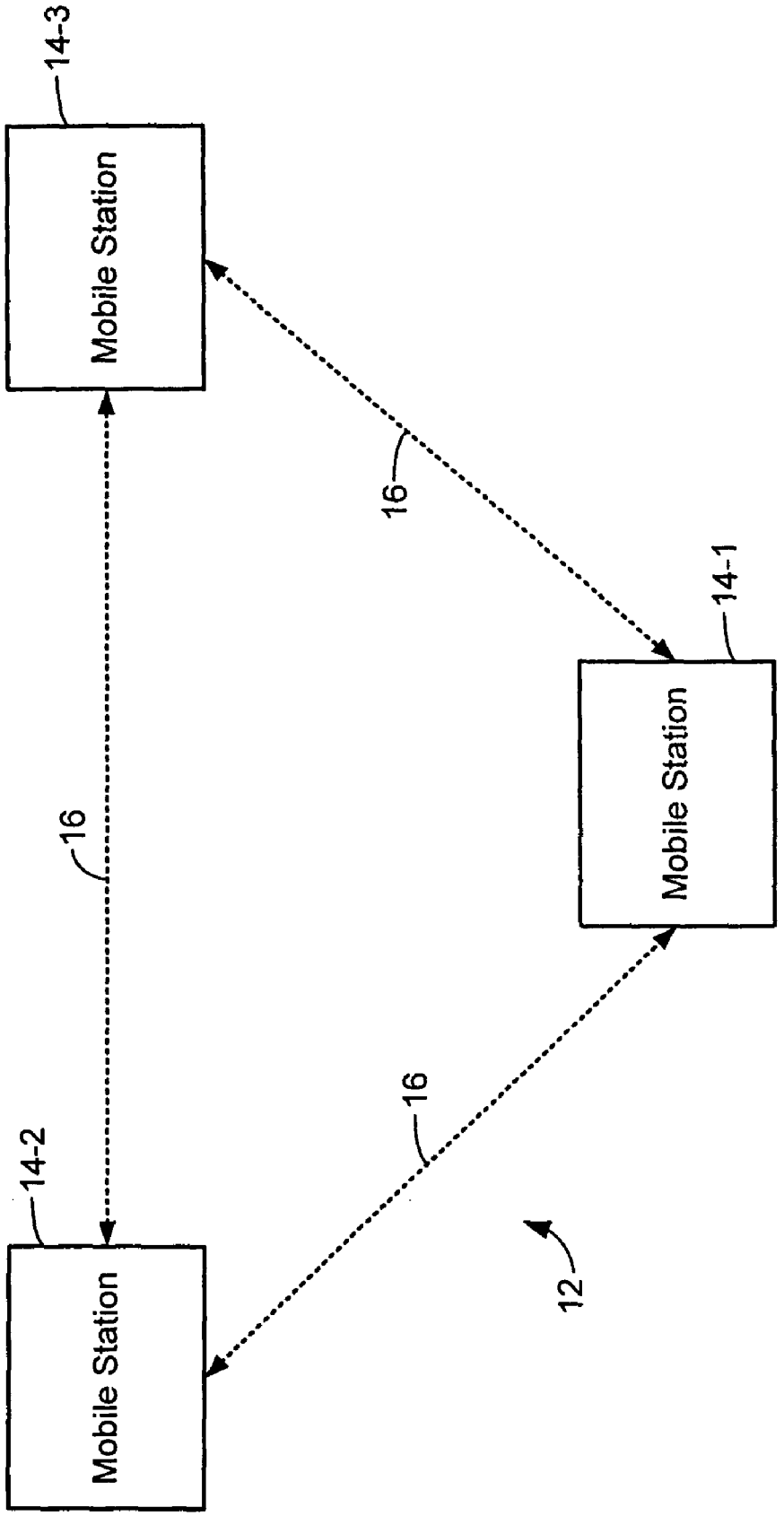

FIG. 1
Prior Art

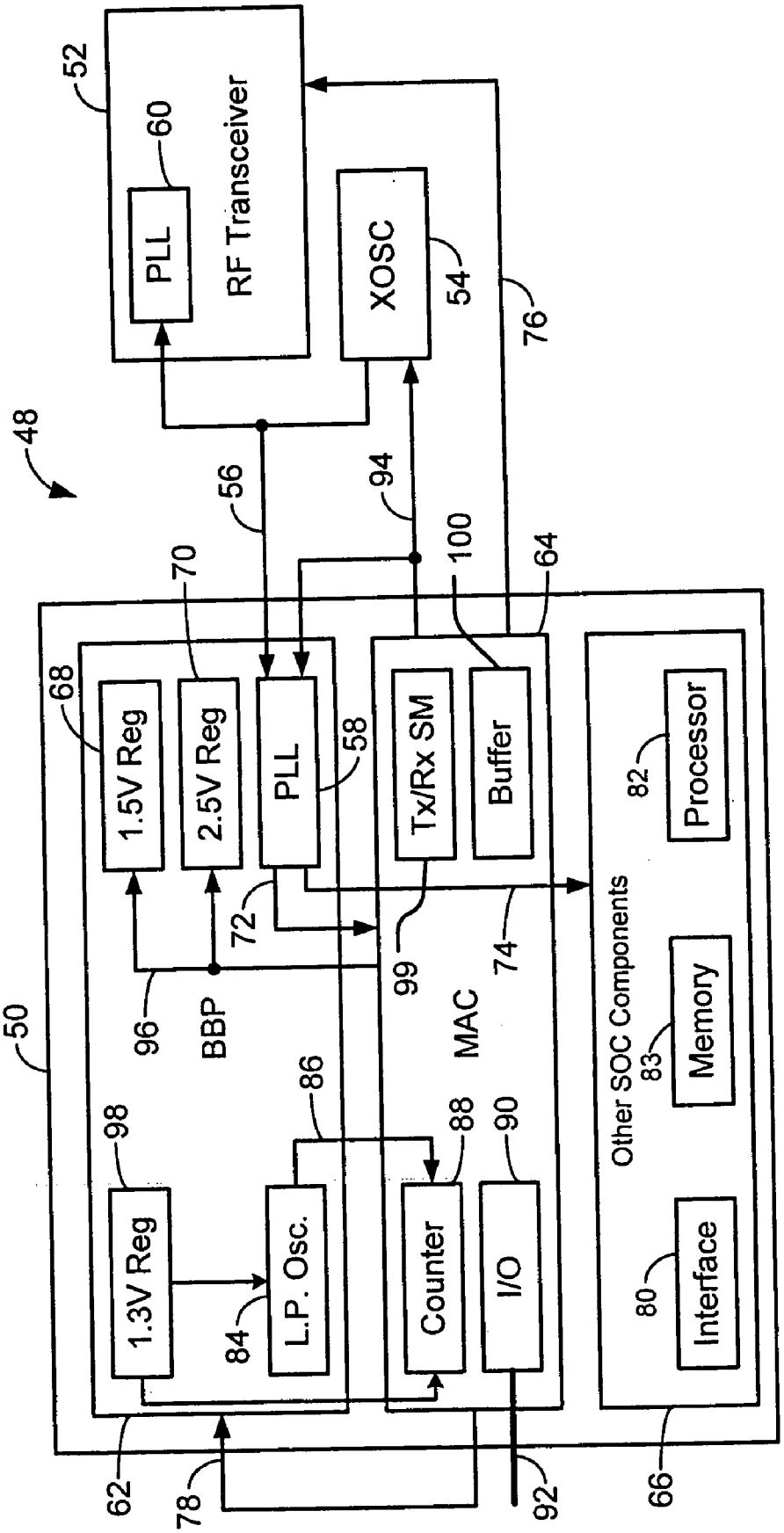
48
52
RF Transceiver
PLL
60
XOSC
54
76
56
94
100
64
50
68
70
1.5V Reg
2.5V Reg
PLL
58
Tx/Rx SM
Buffer
72
99
74
96
BBP
MAC
86
98
88
90
1.3V Reg
L.P. Osc.
84
Counter
I/O
Other SOC Components
82
Processor
83
Memory
80
Interface
62
78
92
66

FIG. 2

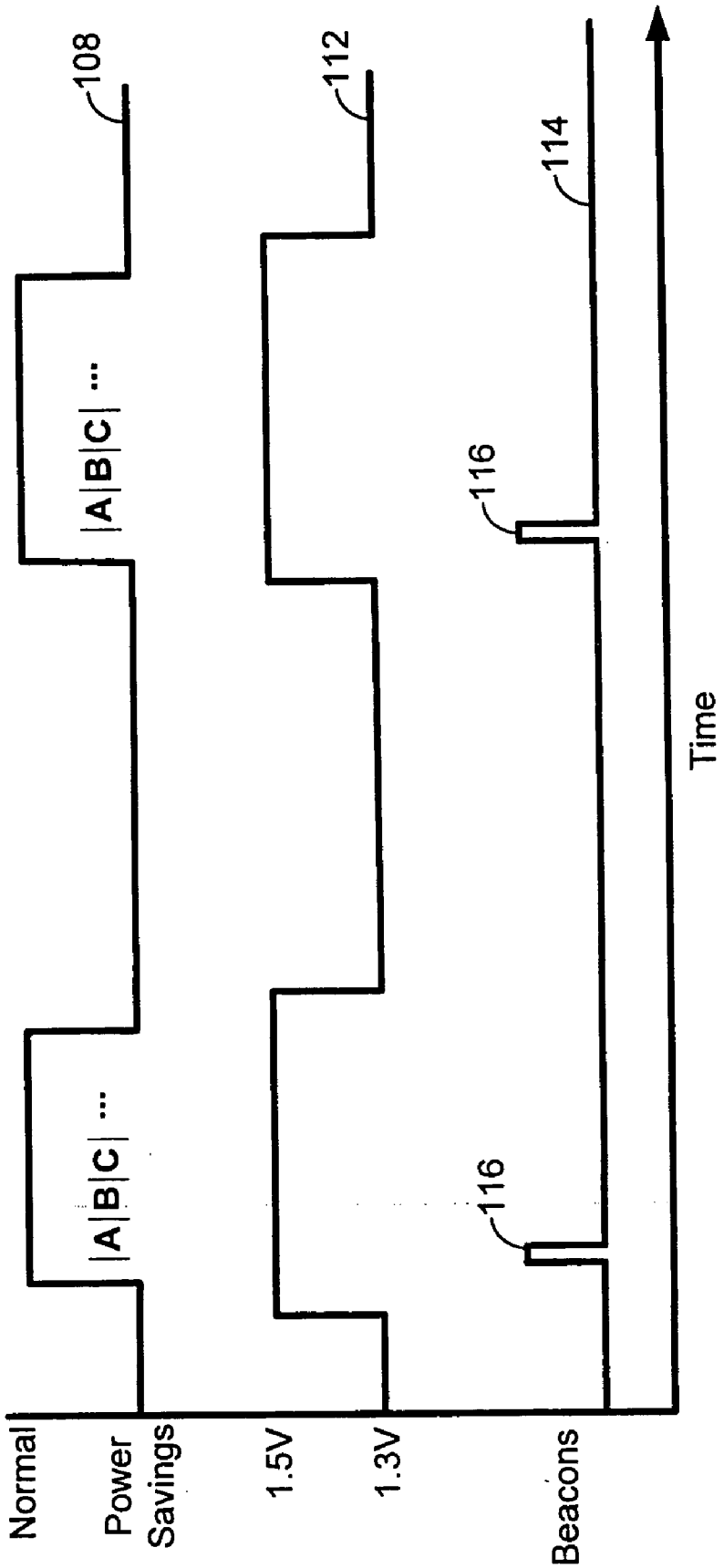
106
108
112
114
116
116
|A|B|C| ...
|A|B|C| ...
Normal
Power Savings
1.5V
1.3V
Beacons
Time

FIG. 3

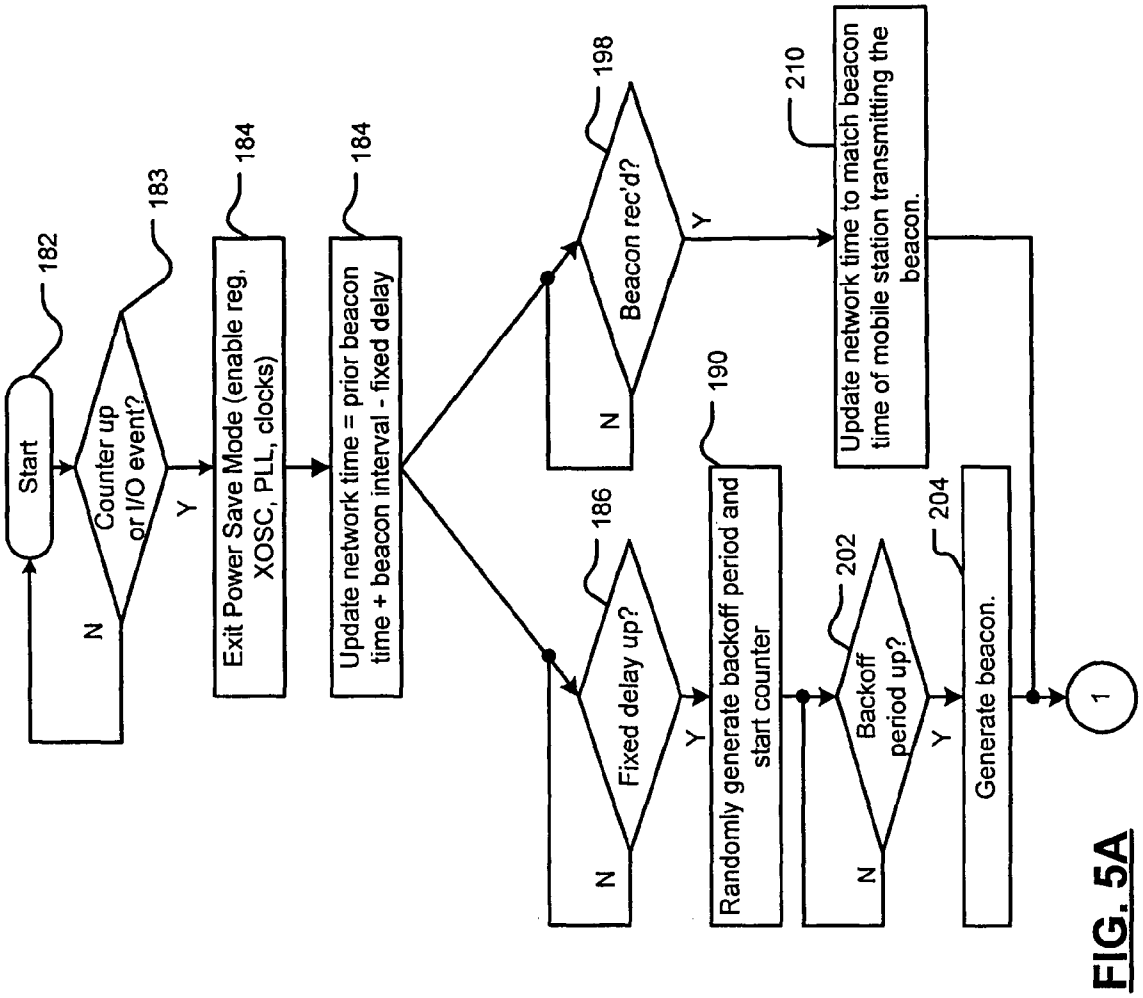
Start
182
Counter up or I/O event?
183
N
Y
Exit Power Save Mode (enable reg, XOSC, PLL, clocks)
184
Update network time = prior beacon time + beacon interval - fixed delay
184
Fixed delay up?
186
N
Y
Randomly generate backoff period and start counter
190
Beacon rec'd?
198
N
Y
Update network time to match beacon time of mobile station transmitting the beacon.
210
Backoff period up?
202
N
Y
Generate beacon.
204
1

FIG. 5A

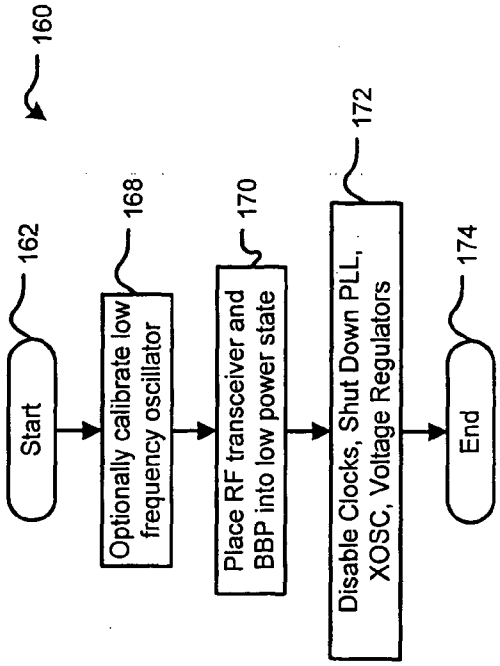
160
Start
162
Optionally calibrate low frequency oscillator
168
Place RF transceiver and BBP into low power state
170
Disable Clocks, Shut Down PLL, XOSC, Voltage Regulators
172
End
174

FIG. 4

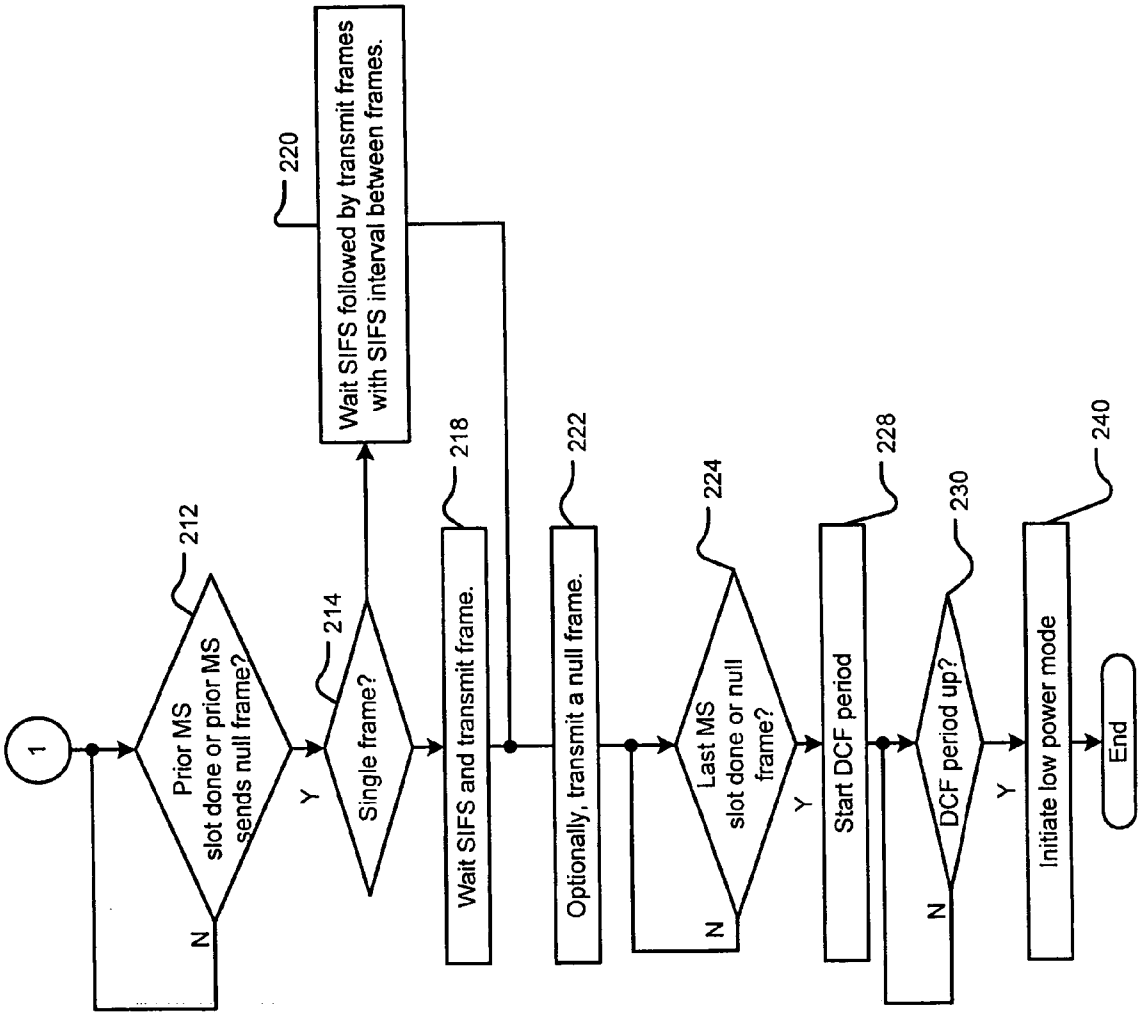
1
Prior MS slot done or prior MS sends null frame?
212
N
Y
Single frame?
214
Wait SIFS followed by transmit frames with SIFS interval between frames.
220
Wait SIFS and transmit frame.
218
Optionally, transmit a null frame.
222
Last MS slot done or null frame?
224
N
Y
Start DCF period
228
DCF period up?
230
N
Y
Initiate low power mode
240
End

FIG. 5B

WIRELESS LOCAL AREA NETWORK AD-HOC MODE FOR REDUCING POWER CONSUMPTION

FIELD OF THE INVENTION

[0001] The present invention relates to wireless networks, and more particularly to wireless networks operating in an ad-hoc mode.

BACKGROUND OF THE INVENTION

[0002] IEEE section 802.11, which is hereby incorporated by reference in its entirety, defines several different standards for configuring wireless Ethernet networks and devices. For example, 802.11 standards that have been popularized include 802.11, 802.11(a), 802.11(b) and 802.11(g). According to these standards, wireless Ethernet network devices may be operated in either an infrastructure mode or an ad-hoc mode. In the infrastructure mode, the wireless network devices communicate with each other through an access point. In the ad-hoc mode, the wireless network devices (which are typically called mobile stations) communicate directly with each other and do not employ an access point. The term mobile station may not necessarily mean that a wireless network device that is actually mobile. For example, a desktop computer may incorporate a wireless network device and operate as a mobile station in an ad-hoc network.

[0003] Referring now to **FIG. 1**, a wireless network **12** that is shown operates in an ad-hoc mode as defined by IEEE section 802.11 and other future wireless standards. The wireless network **12** includes multiple mobile stations **14-1**, **14-2**, and **14-3** that transmit and receive wireless signals **16** directly with each other to form an ad-hoc network. The mobile stations **14-1**, **14-2**, and **14-3** do not continuously exchange data.

[0004] Since the mobile stations are often battery powered, it is important to minimize power consumption to preserve battery life. Therefore, some wireless devices implement a low power mode and an active mode. During the active mode, the wireless device transmits and/or receives data. During the low power mode, the wireless device shuts down components and/or alters operation to conserve power. Usually, the wireless device is not able to transmit or receive data during the lower power mode.

[0005] Wireless Ethernet network devices may be implemented by a system on chip (SOC) circuit that includes a baseband processor (BBP), a medium access controller (MAC) device, a host interface, and one or more processors. A host communicates with the wireless network device via the host interface. The SOC circuit may include a radio frequency (RF) transceiver or the RF transceiver may be located externally. The host interface may include a peripheral component interface (PCI), although other types of interfaces may be used. The processor(s) may be Advanced RISC Machine (ARM) processor(s), although other types of processors may be used.

[0006] The MAC device controls and selects different operating modes of the BBP and the RF transceiver. During operation, the MAC device instructs the BBP and the RF transceiver to transition to a low power mode to conserve power. The BBP and RF transceivers may include phase-locked loops (PLL), which are calibrated using a reference signal that is supplied by a crystal oscillator (XOSC). [0]The SOC may also include voltage regulators that provide regulated supply voltages to the system.

[0007] In an ad-hoc mode, the MAC device may instruct the BBP and the RF transceiver to transition to the low power mode when the mobile stations do not have data to exchange. Usually the voltage regulator in the BBP, the XOSC and PLL devices remain active and consume power during the low power mode.

[0008] In some conventional approaches, the operating voltage and/or the clock frequency are reduced during the low power mode while still allowing the system to operate at full capacity. In other conventional approaches, the way that functions are implemented is modified to reduce power consumption. For example, the device may lower a frequency of operation so that calculations take longer to complete.

[0009] In another approach, a wireless Ethernet network device has active and low power modes. A first voltage regulator regulates supply voltage during the active mode. A second voltage regulator dissipates less power than the first voltage regulator and regulates supply voltage during the low power mode. The MAC device selects the first voltage regulator during the active mode and the second voltage regulator during the low power mode. A crystal oscillator outputs a timing signal to the first PLL during the active mode. A first oscillator selectively generates a first clock signal during the low power mode. The first oscillator dissipates less power than the crystal oscillator.

[0010] In wireless networks, there are many reasons that make it difficult to stay in the low power mode for a period of time that is sufficient to significantly reduce average power consumption. For example in an ad-hoc network, each mobile station remains awake after each beacon for a duration of an Announcement Traffic Indication Map (ATIM) window. During the ATIM window, a first mobile station in the ad-hoc network may transmit a directed ATIM message to indicate that it has a message for a second mobile station. Other mobile stations likewise transmit directed ATIM messages if needed. In addition, there may be multicast ATIM messages that need to be sent during the ATIM period. Therefore, all of the mobile stations in the ad-hoc network remain awake during the ATIM window. When a mobile station receives a directed ATIM frame that is addressed to it or a multicast ATIM frame during the ATIM window, the mobile station remains awake for the entire beacon interval.

[0011] The relative timing of the directed and multicast ATIM messages during the ATIM window is typically determined using a backoff period. The mobile station counts down the backoff period and then transmits the respective ATIM message (if needed). A random number generator is typically used to generate the backoff period for each mobile station to reduce frame collisions. The use of random backoff periods lengthens the interframe space and increases the time that each mobile station must remain in receive mode. Similarly, a Distributed Coordination Function (DCF) is also implemented after the ATIM window to avoid collisions on the medium. The DCF also employs random backoff periods, which also increases the interframe space.

[0012] In some approaches, before the mobile station can enter the low power mode, the mobile station must exchange

messages or frames with other mobile stations (hereinafter "power saving frame exchange"). The power saving frame exchange involves data transmission, which is the activity that consumes the most power. Therefore, the power saving frame exchange, which is used each time that the mobile stations enter the low power mode, further increases power consumption of the mobile stations.

[0013] In addition, at least one mobile station remains in the active mode between beacon intervals. This is due in part to the fact that at least one mobile station needs to maintain network time. In addition, mobile stations need to complete the power saving frame exchange sequence with another mobile station before going into the low power mode. The last mobile station that is awake does not have another mobile station to communicate with.

SUMMARY OF THE INVENTION

[0014] A wireless station according to the present invention communicates with at least one other wireless station in a local area network (LAN). A media access control (MAC) device controls transitions between an active mode and a low power mode. A radio frequency (RF) transceiver communicates with the MAC device and, after the transition to the active mode, transmits data during a predetermined time slot that is assigned to the wireless LAN station and that is not assigned to other wireless LAN stations in the LAN.

[0015] In other features, the RF transceiver receives data from other wireless LAN stations in the LAN during the active mode and transitions to the low power mode after receiving the data from the other wireless LAN stations. The MAC device transitions the wireless LAN station to the active mode prior to a timing beacon and transitions the wireless LAN station to the low power mode prior to a subsequent beacon.

[0016] In other features, after the transition to the active mode, the MAC device updates network time. The network time is set equal to a prior beacon time plus a beacon interval minus a fixed delay. After the fixed delay and a backoff period, the wireless LAN station transmits a beacon if the wireless LAN station has not already received a beacon. The wireless LAN station updates network time to match a time of the received beacon. The wireless LAN station transmits at least one frame following a short interframe space during the assigned time slot. The assigned time slot occurs one of after a prior time slot expires and after a wireless LAN station with the prior time slot transmits a null frame. A Distributed Coordination Function (DCF) interval is provided after a last one of the wireless LAN stations transmits data and before the wireless LAN stations transition to the low power mode.

[0017] In still other features, a first voltage regulator regulates supply voltage during the active mode and is powered down during the low power mode. A second voltage regulator dissipates less power than the first voltage regulator and regulates supply voltage during the low power mode. The MAC device selects the first voltage regulator during the active mode and the second voltage regulator during the low power mode. A baseband processor (BBP) performs radio frequency mixing and that communicates with the MAC device and the RF transceiver. A first phase locked loop (PLL) generates a first clock signal for the BBP during the active mode. A crystal oscillator outputs a timing signal to the first PLL during the active mode. The RF transceiver communicates with the BBP and includes a second PLL that receives the timing signal from the crystal oscillator during the active mode and that generates a second clock signal for the RF transceiver.

[0018] In still other features, a first oscillator generates a third clock signal during the low power mode. The first oscillator dissipates less power than the crystal oscillator. When the MAC device initiates the low power mode, at least one of the first voltage regulator, the RF transceiver, the first PLL, the second PLL and the crystal oscillator is shut down.

[0019] In still other features, the MAC device includes a counter. When the MAC device initiates the low power mode, the second voltage regulator powers the first oscillator and the counter. When the counter reaches a predetermined count, the MAC device powers up at least two of the crystal oscillator, the first voltage regulator, the RF transceiver, the first PLL and the second PLL.

[0020] In yet other features, the wireless LAN station is associated with a host that runs a multiplayer gaming application.

[0021] In still other features, a processor that communicates with the crystal oscillator calibrates the first oscillator using the timing signal from the crystal oscillator. At least two of the BBP, the first voltage regulator, the second voltage regulator, the RF transceiver, the MAC device, and the first PLL are implemented by a system on chip (SOC).

[0022] In yet other features, the wireless LAN station is otherwise compliant with at least one of IEEE section 802.11, 802.11(a), 802.11(b), and 802.11(g). The LAN is an ad-hoc network. The wireless LAN stations are mobile stations in an ad-hoc network.

[0023] A wireless local area network (LAN) according to the present invention includes a first wireless LAN station that selectively operates in low power and active modes, that initiates a LAN, and that assigns predetermined time slots for transmitting data to wireless LAN stations joining the LAN. A second wireless LAN station selectively operates the low power and active modes, communicates with the first wireless LAN station, receives one of the predetermined time slots from the first wireless LAN station for transmitting data and, after transitioning to the active mode, transmits data during the one of the predetermined time slots.

[0024] In other features, the first wireless LAN station includes a first media access control (MAC) device that controls transitions between the active mode and the low power mode. A first radio frequency (RF) transceiver communicates with the first MAC device, transmits data for the first wireless LAN station during one of the predetermined time slots during the active mode, receives data from the other wireless LAN stations in the LAN during the active mode, and transitions to the low power mode after receiving the data from the other wireless LAN stations.

[0025] In other features, the second wireless LAN station includes a second media access control (MAC) device that controls transitions between the active mode and the low power mode. A second RF transceiver communicates with the second MAC device, transmits data for the second wireless LAN station during another of the assigned time slots during the active mode, receives data from the other

wireless LAN stations in the LAN during the active mode, and transitions to the low power mode after receiving the data from the other wireless LAN stations.

[0026] In still other features, the first MAC device transitions the first wireless LAN station to the active mode prior to a timing beacon. The first MAC device transitions the first wireless LAN station to the low power mode prior to a subsequent beacon. After the transition to the active mode, the first MAC device updates network time. The network time is set equal to a prior beacon time plus a beacon interval minus a fixed delay. After the fixed delay and a backoff period, the first wireless LAN station transmits a beacon if the first wireless LAN station has not already received a beacon. The first wireless LAN station updates network time to match a time of the received beacon. The first wireless LAN station transmits at least one frame following a short interframe space during the assigned time slot.

[0027] In other features, the assigned time slot occurs one of after a prior time slot expires and after a wireless LAN station with the prior time slot transmits a null frame. A Distributed Coordination Function (DCF) interval is provided after a last one of the wireless LAN stations transmits data and before the transition to the low power mode.

[0028] In other features, the first and second wireless LAN stations are otherwise compliant with at least one of IEEE section 802.11, 802.11(a), 802.11(b), and 802.11(g). The first and second wireless LAN stations form an ad-hoc network. The first and second wireless LAN stations are mobile stations in an ad-hoc network.

[0029] Further areas of applicability of the present invention will become apparent from the detailed description provided hereinafter. It should be understood that the detailed description and specific examples, while indicating the preferred embodiment of the invention, are intended for purposes of illustration only and are not intended to limit the scope of the invention.

BRIEF DESCRIPTION OF THE DRAWINGS

[0030] The present invention will become more fully understood from the detailed description and the accompanying drawings, wherein:

[0031] **FIG. 1** illustrates a wireless network that is configured in an ad-hoc mode and that includes multiple mobile stations according to the prior art;

[0032] **FIG. 2** is a functional block diagram of a wireless network communications device that implements a wireless ad-hoc power savings mode according to the present invention;

[0033] **FIG. 3** is a timing diagram that illustrates operating modes and supply voltage levels;

[0034] **FIG. 4** is a flowchart illustrating steps performed by the wireless network communications device to enter the wireless ad-hoc power savings mode according to the present invention; and

[0035] **FIGS. 5A and 5B** are flowcharts illustrating steps performed by the wireless network communications device to exit the wireless ad-hoc power savings mode according to the present invention.

DETAILED DESCRIPTION OF THE PREFERRED EMBODIMENTS

[0036] The following description of the preferred embodiment(s) is merely exemplary in nature and is in no way intended to limit the invention, its application, or uses. For purposes of clarity, the same reference numbers will be used in the drawings to identify similar elements.

[0037] To minimize power consumption, the wireless ad-hoc power savings mode according to the present invention allows all of the mobile stations to update each of the other mobile stations in a Basic Service Set (BSS) while minimizing the number of frame transitions that are required by each mobile station. Using the approach described below, the amount of time that each mobile station spends in the low power mode is significantly increased, which reduces the average power consumption of the mobile stations.

[0038] In some types of ad-hoc networks, all of the mobile stations need to transmit data regularly, for example, at each beacon interval. One example of this type of ad-hoc network is a wireless multi-player gaming application. Since all of the mobile stations in an ad-hoc network need to transmit and receive data at each beacon interval, the ATIM window is eliminated according to the present invention. This eliminates a wasteful period during which each mobile station needs to transmit a frame and all mobile stations stay in the receive mode to learn something that the mobile station already knows (that every other mobile station had data to transmit).

[0039] Since all mobile stations have data to transmit, a time slot approach that is similar to time division multiplexing (TDM) and that is described below is used to grant access to the wireless medium to mobile stations (instead of the DCF approach that is currently used). The time slot approach eliminates large idle times on the medium due to long interframe spacing and backoff times.

[0040] The mobile stations can enter the low power mode soon after each mobile station has transmitted its data. Power save frame exchanges are eliminated before the low power mode. This allows mobile stations to enter the low power mode sooner and with lower power consumption since the power save frame exchanges are no longer transmitted. In other words, it is assumed that all mobile stations will transition to the low power mode.

[0041] The wireless network devices according to the present invention preferably reduce power consumption using the low power saving approach that is set forth in "Power Savings Apparatus and Method For Wireless Network Devices", U.S. patent application Ser. No. 10/650,887, filed on Aug. 28, 2003, which is hereby incorporated by reference in its entirety. Skilled artisans will appreciate, however, that the wireless ad-hoc power saving approach according to the present invention may use any suitable power saving approach.

[0042] Referring now to **FIG. 2**, the wireless network communications device **48** in a mobile station operates in two power modes. In an active mode, the wireless network communications device **48** processes incoming and outgoing data. In the low power mode, the wireless network communications device **48** does not transmit or receive data. In one implementation, the wireless network communications device **48** includes an SOC circuit **50**, an external radio

frequency (RF) transceiver **52**, and a crystal oscillator (XOSC) **54**. The crystal oscillator **54** can be located externally or the amplifier portion of the crystal oscillator **54** can be integrated with the SOC circuit **50** and the crystal portion of the crystal oscillator **54** can be located externally.

[**0043**] The RF transceiver **52** wirelessly transmits/receives data to/from an AP or another mobile station. The XOSC **54** provides a reference signal **56** to first and second phase-locked loops (PLL) **58** and **60**. The first PLL **58** is located in the SOC circuit **50** and the second PLL **60** is located in the RF transceiver **52**. The first and second PLL **58** and **60** generate clock signals that are based on the reference signal **56** from the XOSC **54**. For example, the XOSC **54** may provide a reference signal at a frequency of 44 MHz, although other frequencies may be used. The SOC and/or the RF transceiver may include multiple PLLs if desired to generate additional clock signals.

[**0044**] In one implementation, the SOC circuit **50** includes a baseband processor (BBP) **62**, a medium access control (MAC) device **64**, and other SOC components **66**. The BBP **62** includes a digital voltage regulator **68**, an analog voltage regulator **70**, and the first PLL **58**. The digital and analog voltage regulators **68** and **70**, respectively, supply regulated voltages to one or more components in the SOC circuit **50**. For example, the digital voltage regulator **68** may operate at 1.5V and the analog voltage regulator **70** may operate at 2.5V. Additional analog and/or digital voltage regulators and/or voltage regulators operating at other voltages may be employed. The first PLL **58** generates one or more clock signals **72** for the MAC device **64**, one or more clock **74** for the other SOC components **66** and one or more clock signals for the BBP **62** based on the reference signal **56** from the XOSC **54**.

[**0045**] The MAC device **64** transmits a transceiver mode signal **76** to the RF transceiver **52**. The transceiver mode signal **76** instructs the RF transceiver **52** to operate in the active mode or the low power mode. The transceiver mode signal **76** also informs the RF transceiver **52** whether it is transmitting or receiving RF signals during the active mode. The RF transceiver **52** remains deactivated during the low power mode and does not transmit or receive RF signals. Preferably, the RF transceiver **52** is completely shut down for maximum power reduction. However, during the low power mode, the RF transceiver **52** may utilize a small amount of power to ensure a quick transition from the low power mode to the active mode.

[**0046**] The MAC device **64** also transmits a BBP mode signal **78** to the BBP **62**. The BBP mode signal **78** instructs the BBP **62** to operate in the active mode or the low power mode. The other SOC components **66** include a host interface **80**, a processor **82** and memory **83**. The host interface **80** provides an interface such as peripheral component interconnect (PCI) interface or other suitable interfaces. The host interface may be connected to a host. The processor **82** may be an Advanced RISC Machine (ARM) processor and/or any other processor. The memory **83** stores data.

[**0047**] The duration that the wireless network communications device **48** operates in the low power mode varies. The start time is variable and the end time is fixed (in other words, the low power mode ends before the start of the next beacon). If the wireless network communications device **48** is not triggered during the low power mode, it returns to the active mode before the start of the next beacon. The XOSC **54** consumes a significant amount of power during the active mode. For example, the XOSC **54** may consume 10-12 mA of current. Therefore, the MAC device **64** deactivates the XOSC **54** during the low power mode.

[**0048**] The BBP **62** includes a low power oscillator **84** that provides a signal **86** to a counter **88** in the MAC device **64**. For example, the low power oscillator **84** may be implemented either internally (as shown) or externally and may operate at a frequency of 100 kHz. The counter **88** determines when the wireless network communications device **48** wakes from the low power mode prior to a beacon interval. The low power oscillator **84** is typically susceptible to performance deviations due to temperature variances. Therefore, before the wireless network communications device **48** enters the low power mode, the processor **82** optionally calibrates the low power oscillator **84** using the XOSC **54** to ensure that the low power oscillator **84** accurately tracks the desired low power time period. The calibration may be performed every time that the low power mode occurs, periodically, randomly, on an event basis or using any other criteria. Alternately, the MAC, the BBP and/or any other suitable system component can perform the calibration of the low power oscillator.

[**0049**] For example, the processor **82** may measure the difference between the frequency of the low power oscillator **84** and the frequency of the XOSC **54**. Based on the frequency difference, the processor **82** determines the number of times that the counter **88** must increment or decrement to equal a desired period. The XOSC **54** can also calibrate the low power oscillator **84** on a periodic basis.

[**0050**] The MAC device **64** includes an input/output (I/O) module **90**, which may be located outside of the MAC in the SOC circuit **50**. For example, the I/O module **90** may be a general purpose I/O module (GPIO). In the event that a mobile station requires the wireless network communications device **48** to return to the active mode, the mobile station triggers an I/O input **92**. If the I/O input **92** is triggered during the low power mode, the wireless network communications device **48** returns to the active mode. Some host interfaces such as a compact flash card may not include a signal to trigger the I/O module. In that case, the processor **82** generates an interrupt when the wireless network communications device **48** returns to the active mode. The interrupt queries the host to determine whether the host has data to transmit.

[**0051**] Before entering the low power mode, the processor **82** optionally calibrates the low power oscillator **84** using signals generated by the XOSC **54**. The MAC device **64** instructs the BBP **62**, the RF transceiver **52** and the PLL **60** to enter the low power mode. The MAC device **64** disables internal clocks in the SOC circuit **50**. The MAC device **64** next disables the first PLL **58**, then the XOSC **54** and voltage regulators **68** and **70** with a disable signal **94**.

[**0052**] Since the MAC device **64** disables the digital voltage regulator **68** during the low power mode, the BBP **62** includes a low power digital voltage regulator **98**. The low power voltage regulator **98** dissipates less power than the other voltage regulators. For example, the voltage regulator **98** may operate at 1.3 V and with a lower current level than the other regulators. The low power voltage regulator **98** provides power for the low power oscillator **84** and the

counter during the low power mode. The low power voltage regulator **98** also supplies power to registers and memories in the SOC circuit **50** so that the state of the SOC circuits **50** is retained, which is important for fast wake up time. The MAC device also includes transmit and receive state machines **99** and a transmit buffer **100**.

[**0053**] During the low power mode, the I/O module **90** monitors the I/O input **92**. If the I/O input **92** is not triggered during the low power mode, the wireless network communications device **48** returns to the high power mode after the counter **88** reaches the end of the low power period. In order to return to the active mode, the MAC device **64** enables the voltage regulators **68** and **70** and the XOSC **54**, respectively. The MAC device **64** activates the first PLL **58**. The MAC device next enables the internal clocks **72** and **74**. Finally, the MAC device **64** instructs the BBP **62** and the RF transceiver **52** to operate in the active mode.

[**0054**] Referring now to **FIG. 3**, an exemplary timing diagram **106** according to the present invention is illustrated. A chipset mode signal **108** identifies the active mode and the low power mode. A supply voltage signal **112** indicates the voltage level that is supplied by either the digital voltage regulator **68** or the low power digital voltage regulator **98**. The supply voltage signal **112** illustrates the supply voltage fluctuation between 1.3 V to 1.5 V prior to the wireless network communications device **48** returning to the normal mode. As can be appreciated, other higher and/or lower voltage levels may be used (such as but not limited to 1.1V and 1.3 V). This ensures that the digital voltage regulator **68** supplies a sufficient amount of power to devices such as the BBP **62** when the devices return from the low power mode. Additionally, the supply voltage decreases from 1.5 V to 1.3 V shortly after the wireless network communications device **48** enters the low power mode. This ensures that the SOC circuit **50** receives sufficient power and avoids overloading before devices such as the BBP **62** are completely deactivated.

[**0055**] A beacon transmission signal **114** illustrates an exemplary beacon transmission pattern. Preferably, the wireless network communications device **48** returns to the active mode just prior to a beacon transmission.

[**0056**] Referring now to **FIG. 4**, an ad-hoc mode shutdown algorithm **160** begins in step **162**. In step **168**, the processor **82** optionally calibrates the low power oscillator **84** using signals generated by the XOSC **54**. In step **170**, the RF transceiver and the BBP are transitioned to the low power state or mode. In step **172**, the internal clocks are disabled and the PLLs, the XOSC and the voltage regulators are shut down. Control ends in step **174**.

[**0057**] Referring now to **FIGS. 5A and 5B**, steps that are performed by each mobile station to implement the new wireless ad-hoc mode will now be described, starting at a point in time when all mobile stations are in sleep mode. Upon entering sleep mode, all mobile stations time the duration of the sleep interval in order to wakeup and stabilize all circuitry prior to the next scheduled beacon. Preferably, this is done with a low frequency oscillator that is described above in order to reduce current consumption. In step **183**, if the counter is up and the wakeup time has arrived, the remaining circuitry is enabled in step **184**. Once all of the circuitry has stabilized, the network time in each mobile station is updated to the previous beacon time plus the beacon interval time minus some fixed delay in step **186**.

[**0058**] Once a mobile station has returned to the active state, it will be put into receive mode, and will wait for a beacon to be received in step **198**. In parallel with this, each mobile station will attempt to transmit a beacon, beginning by waiting for the fixed delay to end in step **186**. These parallel processes will continue until either a beacon is received from another mobile station or transmitted by the mobile station, at which time data transfer will begin in step

[**0059**] At the end of the fixed delay as determined in step **190**, each mobile station will attempt to transmit a beacon using the standard random backoff algorithm. To that end, the random backoff period is generated and a backoff counter is started in step **194**. In step **202**, control determines whether the backoff period is up. If true, the mobile station generates a beacon in step **204**.

[**0060**] All mobile stations receiving a beacon update their network time to match that of the mobile station transmitting the beacon in step **210**. Once a beacon has been transmitted, each mobile station will be given a slot of time to transmit its data using multicast frames to all other mobile stations. If more than one frame needs to be transmitted, a SIFS interval will be used between frames. The sequence will proceed with mobile station A followed by mobile station B followed by mobile station C (for example, see **FIG. 3**), until all mobile stations have transmitted. Mobile station B will be allowed to transmit at the earlier of the end of mobile station A's slot time or after receiving a null data frame from mobile station A. Mobile station B will use a SIFS interval before transmitting. Each mobile station may optionally transmit each frame multiple times.

[**0061**] In step **212**, control determines whether the slot assigned to the prior mobile station is over or whether the prior mobile station sent a null frame. In step **214**, control determines whether the current mobile station has a single frame to send. If true, the frame is transmitted after a short interframe space (SIFS) in step **218**. If false, multiple frames are transmitted after a SIFS interval, with a SIFS interval between each pair of adjacent frames in step **220**. In step **222**, control optionally transmits a null packet to prematurely end that mobile stations slot time. In step **224**, control determines whether the last mobile station slot is done or whether the last mobile station sends a null frame. If true, the mobile stations start the DCF period in step **228**. When the DCF period is up in step **230**, the mobile station initiates the low power mode in step **240** (as shown in **FIG. 4**).

[**0062**] The designation of mobile stations as mobile station A, mobile station B, etc. can be made in any suitable fashion. One approach assigns the mobile station that initiated the BSS to be mobile station A. The next mobile station that joins the BSS is designated mobile station B, etc.

[**0063**] When the time slot for the last mobile station in the sequence has ended or the last mobile station in the sequence has transmitted a null frame, a DCF interval (having a programmable length) is provided to allow the network to operate in the DCF mode. The DCF interval allows new mobile stations to join the network and allows for other management and control frames to be sent. The DCF interval can be used to inform existing mobile stations in the network that a mobile station has joined or left the BSS. As can be appreciated, the DCF interval can also be used to distribute other information as well. At the end of the DCF interval, all mobile stations can enter the sleep state without informing other mobile stations.

[0064] Occasionally, there may be situations when a mobile station does not receive data from one of the other mobile stations. During the DCF interval, a mobile station can optionally send messages that request another mobile station to raise its power level.

[0065] In gaming implementations, there may be situations when non-gaming traffic occurs such as when a new mobile station wants to join BSS and/or a module station sends messages relating to starting a game over. In these situations, each mobile station can send multiple frames up to a maximum time limit. Initially management frames can be sent followed by data frames. A data null frame can be used to end a time slot early. Alternately, the DCF interval can be used. When a mobile station leaves the network (without informing other stations), the mobile station that initiated the BSS can send a message during the DCF interval that reassigns the slots and takes away the slot from a mobile station that is no longer transmitting.

[0066] As can be appreciated, while the present invention has been described in conjunction with ad-hoc networks, skilled artisans will appreciate that the present invention also applies to wireless infrastructure networks as well. In addition, while the wireless network devices are implemented by an SOC, any other suitable approach can be used including but not limited to Application Specific Integrated Circuits (ASICs), controllers, processors and memory running firmware and/or software, combinatorial logic, discrete circuits and/or combinations thereof.

[0067] While the foregoing description described the use of a null frame to prematurely end a time slot, skilled artisans will appreciate that there are other ways of ending a frame prematurely. For example, specific information can be inserted in the MAC header to identify the final frame of the current time slot.

[0068] For example, every data frame has a MAC header that includes a sequence number. In one implementation, a predetermined sequence number (for example, sequence number 0 or other sequence numbers) is used to designate the end the time slot. Every data frame has a MAC header that also includes a duration value. A predetermined duration value can be used to end the time slot (for example, duration number 0 or other duration numbers can be used).

[0069] Those skilled in the art can now appreciate from the foregoing description that the broad teachings of the present invention can be implemented in a variety of forms. Therefore, while this invention has been described in connection with particular examples thereof, the true scope of the invention should not be so limited since other modifications will become apparent to the skilled practitioner upon a study of the drawings, specification, and the following claims.

What is claimed is:

1. A wireless station that communicates with at least one other wireless station in a local area network (LAN), comprising:

a media access control (MAC) device that controls transitions between an active mode and a low power mode; and

a radio frequency (RF) transceiver that communicates with said MAC device and that, after said transition to said active mode, transmits data during a predetermined time slot that is assigned to said wireless LAN station and that is not assigned to other wireless LAN stations in said LAN.

2. The wireless LAN station of claim 1 wherein said RF transceiver receives data from other wireless LAN stations in said LAN during said active mode and transitions to said low power mode after receiving said data from said other wireless LAN stations.

3. The wireless LAN station of claim 1 wherein said MAC device transitions said wireless LAN station to said active mode prior to a timing beacon and transitions said wireless LAN station to said low power mode prior to a subsequent beacon.

4. The wireless LAN station of claim 1 wherein after said transition to said active mode, said MAC device updates network time.

5. The wireless LAN station of claim 4 wherein said network time is set equal to a prior beacon time plus a beacon interval minus a fixed delay.

6. The wireless LAN station of claim 5 wherein after said fixed delay and a backoff period, said wireless LAN station transmits a beacon if said wireless LAN station has not already received a beacon.

7. The wireless LAN station of claim 6 wherein said wireless LAN station updates network time to match a time of said received beacon.

8. The wireless LAN station of claim 1 wherein said wireless LAN station transmits at least one frame following a short interframe space during said assigned time slot.

9. The wireless LAN station of claim 1 wherein said assigned time slot occurs at least one of after a prior time slot expires, after a wireless LAN station with said prior time slot transmits a null frame, after a wireless LAN station with said prior time slot transmits a frame with a predetermined sequence number, and after a wireless LAN station with said prior time slot transmits a frame with a predetermined duration value.

10. The wireless LAN station of claim 1 wherein a Distributed Coordination Function (DCF) interval is provided after a last one of said wireless LAN stations transmits data and before said wireless LAN stations transition to said low power mode.

11. The wireless LAN station of claim 1 further comprising:

a first voltage regulator that regulates supply voltage during said active mode and that is powered down during said low power mode; and

a second voltage regulator that dissipates less power than said first voltage regulator and that regulates supply voltage during said low power mode,

wherein said MAC device selects said first voltage regulator during said active mode and said second voltage regulator during said low power mode.

12. The wireless LAN station of claim 11 further comprising:

a baseband processor (BBP) that performs radio frequency mixing and that communicates with said MAC device and said RF transceiver;

a first phase locked loop (PLL) that generates a first clock signal for said BBP during said active mode;

a crystal oscillator that outputs a timing signal to said first PLL during said active mode,

wherein said RF transceiver communicates with said BBP and includes a second PLL that receives said timing signal from said crystal oscillator during said active mode and that generates a second clock signal for said RF transceiver.

13. The wireless LAN station of claim 12 further comprising a first oscillator that generates a third clock signal during said low power mode, wherein said first oscillator dissipates less power than said crystal oscillator.

14. The wireless LAN station of claim 12 wherein when said MAC device initiates said low power mode, at least one of said first voltage regulator, said RF transceiver, said first PLL, said second PLL and said crystal oscillator is shut down.

15. The wireless LAN station of claim 13 wherein said MAC device includes a counter and wherein when said MAC device initiates said low power mode, said second voltage regulator powers said first oscillator and said counter, and wherein when said counter reaches a predetermined count, said MAC device powers up at least two of said crystal oscillator, said first voltage regulator, said RF transceiver, said first PLL and said second PLL.

16. The wireless LAN station of claim 1 wherein said wireless LAN station is associated with a host that runs a multiplayer gaming application.

17. The wireless LAN station of claim 13 further comprising a processor that communicates with said crystal oscillator and that calibrates said first oscillator using said timing signal from said crystal oscillator.

18. The wireless LAN station of claim 12 wherein at least two of said BBP, said first voltage regulator, said second voltage regulator, said RF transceiver, said MAC device, and said first PLL are implemented by a system on chip (SOC).

19. The wireless LAN station of claim 1 wherein said wireless LAN station is otherwise compliant with at least one of IEEE section 802.11, 802.11(a), 802.11(b), and 802.11(g).

20. The wireless LAN station of claim 1 wherein said LAN is an ad-hoc network.

21. The wireless LAN station of claim 1 wherein said wireless LAN stations are mobile stations in an ad-hoc network.

22. A wireless local area network (LAN), comprising:

a first wireless LAN station that selectively operates in low power and active modes, that initiates a LAN, and that assigns predetermined time slots for transmitting data to wireless LAN stations joining said LAN;

a second wireless LAN station that selectively operates said low power and active modes, that communicates with said first wireless LAN station, that receives one of said predetermined time slots from said first wireless LAN station for transmitting data, and that, after transitioning to said active mode, transmits data during said one of said predetermined time slots.

23. The wireless LAN of claim 22 wherein said first wireless LAN station includes:

a first media access control (MAC) device that controls transitions between said active mode and said low power mode; and

a first radio frequency (RF) transceiver that communicates with said first MAC device, that transmits data for said first wireless LAN station during one of said predetermined time slots during said active mode, that receives data from said other wireless LAN stations in said LAN during said active mode, and that transitions to said low power mode after receiving said data from said other wireless LAN stations.

24. The wireless LAN of claim 22 wherein said second wireless LAN station includes:

a second media access control (MAC) device that controls transitions between said active mode and said low power mode; and

a second RF transceiver that communicates with said second MAC device, that transmits data for said second wireless LAN station during another of said assigned time slots during said active mode, that receives data from said other wireless LAN stations in said LAN during said active mode, and that transitions to said low power mode after receiving said data from said other wireless LAN stations.

25. The wireless LAN of claim 23 wherein said first MAC device transitions said first wireless LAN station to said active mode prior to a timing beacon.

26. The wireless LAN of claim 23 wherein said first MAC device transitions said first wireless LAN station to said low power mode prior to a subsequent beacon.

27. The wireless LAN of claim 23 wherein after said transition to said active mode, said first MAC device updates network time.

28. The wireless LAN of claim 27 wherein said network time is set equal to a prior beacon time plus a beacon interval minus a fixed delay.

29. The wireless LAN of claim 28 wherein after said fixed delay and a backoff period, said first wireless LAN station transmits a beacon if said first wireless LAN station has not already received a beacon.

30. The wireless LAN of claim 29 wherein said first wireless LAN station updates network time to match a time of said received beacon.

31. The wireless LAN of claim 23 wherein said first wireless LAN station transmits at least one frame following a short interframe space during said assigned time slot.

32. The wireless LAN of claim 23 wherein said assigned time slot occurs at least one of after a prior time slot expires, after a wireless LAN station with said prior time slot transmits a null frame, after a wireless LAN station with said prior time slot transmits a frame with a predetermined sequence number, and after a wireless LAN station with said prior time slot transmits a frame with a predetermined duration value.

33. The wireless LAN of claim 23 wherein a Distributed Coordination Function (DCF) interval is provided after a last one of said wireless LAN stations transmits data and before said transition to said low power mode.

34. The wireless LAN of claim 22 wherein said first and second wireless LAN stations are otherwise compliant with at least one of IEEE section 802.11, 802.11(a), 802.11(b), and 802.11(g).

35. The wireless LAN of claim 22 wherein said first and second wireless LAN stations form an ad-hoc network.

36. The wireless LAN of claim 22 wherein said first and second wireless LAN stations are mobile stations in an ad-hoc network.

37. A wireless station that communicates with at least one other station in a local area network (LAN), comprising:

media access control (MAC) means for controlling transitions between an active mode and a low power mode; and

radio frequency (RF) transceiver means that communicates with said MAC means for transmitting data after said transition to said active mode during a predetermined time slot that is assigned to said wireless LAN station and that is not assigned to other wireless LAN stations in said LAN.

38. The wireless LAN station of claim 37 wherein said RF transceiver means receives data from said other wireless LAN stations in said LAN during said active mode and transitions to said low power mode after receiving said data from said other wireless LAN stations.

39. The wireless LAN station of claim 37 wherein said MAC means transitions said wireless LAN station to said active mode prior to a timing beacon and transitions said wireless LAN station to said low power mode prior to a subsequent beacon.

40. The wireless LAN station of claim 37 wherein after said transition to said active mode, said MAC means updates network time.

41. The wireless LAN station of claim 40 wherein said network time is set equal to a prior beacon time plus a beacon interval minus a fixed delay.

42. The wireless LAN station of claim 41 wherein after said fixed delay and a backoff period, said wireless LAN station transmits a beacon if said wireless LAN station has not already received a beacon.

43. The wireless LAN station of claim 42 wherein said wireless LAN station updates network time to match a time of said received beacon.

44. The wireless LAN station of claim 37 wherein said wireless LAN station transmits at least one frame following a short interframe space during said assigned time slot.

45. The wireless LAN station of claim 37 wherein said assigned time slot occurs at least one of after a prior time slot expires, after a wireless LAN station with said prior time slot transmits a null frame, after a wireless LAN station with said prior time slot transmits a frame with a predetermined sequence number, and after a wireless LAN station with said prior time slot transmits a frame with a predetermined duration value.

46. The wireless LAN station of claim 37 wherein a Distributed Coordination Function (DCF) interval is provided after a last one of said wireless LAN stations transmits data and before said wireless LAN stations transition to said low power mode.

47. The wireless LAN station of claim 37 further comprising:

first voltage regulating means for regulating supply voltage during said active mode and for powering down during said low power mode; and

second voltage regulating means, which dissipates less power than said first voltage regulating means, for regulating supply voltage during said low power mode,

wherein said MAC means selects said first voltage regulating means during said active mode and said second voltage regulating means during said low power mode.

48. The wireless LAN station of claim 47 further comprising:

baseband processing (BBP) means for performing radio frequency mixing and that communicates with said MAC means and said RF transceiver means;

first phase locked loop (PLL) means for generating a first clock signal for said BBP means during said active mode;

crystal oscillating means for generating a timing signal that is output to said first PLL means during said active mode,

wherein said RF transceiver means communicates with said BBP means and includes second PLL means for receiving said timing signal from said crystal oscillating means during said active mode and for generating a second clock signal for said RF transceiver means.

49. The wireless LAN station of claim 48 further comprising first oscillating means for generating a third clock signal during said low power mode, wherein said first oscillating means dissipates less power than said crystal oscillating means.

50. The wireless LAN station of claim 48 wherein when said MAC means initiates said low power mode, at least one of said first voltage regulating means, said RF transceiver means, said first PLL means, said second PLL means and said crystal oscillating means is shut down.

51. The wireless LAN station of claim 49 wherein said MAC means includes counting means for counting and wherein when said MAC means initiates said low power mode, said second voltage regulating means powers said first oscillating means and said counting means, and wherein when said counting means reaches a predetermined count, said MAC means powers up at least two of said crystal oscillating means, said first voltage regulating means, said RF transceiver means, said first PLL means and said second PLL means.

52. The wireless LAN station of claim 37 wherein said wireless LAN station is associated with a host that runs a multiplayer gaming application.

53. The wireless LAN station of claim 49 further comprising baseband processing (BBP) means for calibrating said first oscillating means using said timing signal from said crystal oscillating means.

54. The wireless LAN station of claim 48 wherein at least two of said BBP means, said first voltage regulating means, said second voltage regulating means, said RF transceiver means, said MAC means, and said first PLL means are implemented by a system on chip (SOC).

55. The wireless LAN station of claim 37 wherein said wireless LAN stations are otherwise compliant with at least one of IEEE section 802.11, 802.11(a), 802.11(b), and 802.11(g).

56. The wireless LAN station of claim 37 wherein said LAN is an ad-hoc network.

57. The wireless LAN station of claim 37 wherein said wireless LAN stations are mobile stations in an ad-hoc network.

58. A wireless local area network (LAN), comprising:

first wireless means for selectively operating in low power and active modes, for initiating a LAN and for assigning predetermined time slots for transmitting data during said active mode;

second wireless means for communicating with said first wireless means, for receiving one of said predetermined time slots from said first wireless means for transmitting data and for transmitting data during said one of said predetermined time slots.

59. The wireless LAN of claim 58 wherein said first wireless means includes:

first media access control (MAC) means that controls transitions between said active mode and said low power mode; and

first radio frequency (RF) transceiver means for communicating with said first MAC means, for transmitting data during one of said predetermined time slots during said active mode, for receiving data from said other wireless means in said LAN during said active mode, and for transitioning to said low power mode after receiving said data from said other wireless means.

60. The wireless LAN of claim 58 wherein said second wireless means includes:

second media access control (MAC) means for controlling transitions between said active mode and said low power mode; and

second RF transceiver means for communicating with said second MAC means, for transmitting data another of said assigned time slots during said active mode, for receiving data from said other wireless means in said LAN during said active mode, and for transitioning to said low power mode after receiving said data from said other wireless means.

61. The wireless LAN of claim 59 wherein said first MAC means transitions said first wireless means to said active mode prior to a timing beacon.

62. The wireless LAN of claim 59 wherein said first MAC means transitions said first wireless means to said low power mode prior to a subsequent beacon.

63. The wireless LAN of claim 59 wherein after said transition to said active mode, said first MAC means updates network time.

64. The wireless LAN of claim 63 wherein said network time is set equal to a prior beacon time plus a beacon interval minus a fixed delay.

65. The wireless LAN of claim 64 wherein after said fixed delay and a backoff period, said first wireless means transmits a beacon if said first wireless means has not already received a beacon.

66. The wireless LAN of claim 65 wherein said first wireless means updates network time to match a time of said received beacon.

67. The wireless LAN of claim 59 wherein said first wireless means transmits at least one frame following a short interframe space during said assigned time slot.

68. The wireless LAN of claim 59 wherein said assigned time slot occurs at least one of after a prior time slot expires, after a wireless LAN station with said prior time slot transmits a null frame, after a wireless LAN station with said prior time slot transmits a frame with a predetermined sequence number, and after a wireless LAN station with said prior time slot transmits a frame with a predetermined duration value.

69. The wireless LAN of claim 59 wherein a Distributed Coordination Function (DCF) interval is provided after a last one of said wireless means transmits data and before said transition to said low power mode.

70. The wireless LAN of claim 58 wherein said first and second wireless means are otherwise compliant with at least one of IEEE section 802.11, 802.11(a), 802.11(b), and 802.11(g).

71. The wireless LAN of claim 58 wherein said first and second wireless means form an ad-hoc network.

72. The wireless LAN of claim 58 wherein said first and second wireless means are mobile stations in an ad-hoc network.

73. A method of operating a wireless station that communicates with at least one other wireless station in a local area network (LAN), comprising:

controlling transitions between an active mode and a low power mode; and

transmitting data after said transition to said active mode during a predetermined time slot that is assigned to said wireless LAN station,

wherein said predetermined time slot is not assigned to other wireless LAN stations in said LAN.

74. The method of claim 73 further comprising:

receiving data from said at least one other wireless LAN station during said active mode; and

transitioning to said low power mode after receiving said data from other wireless LAN stations in said LAN.

75. The method of claim 73 further comprising:

transitioning said wireless LAN station to said active mode prior to a timing beacon; and

transitioning said wireless LAN station to said low power mode prior to a subsequent beacon.

76. The method of claim 73 further comprising updating network time after said transition to said active mode.

77. The method of claim 76 further comprising setting said network time equal to a prior beacon time plus a beacon interval minus a fixed delay.

78. The method of claim 77 further comprising transmitting a beacon if said wireless LAN station has not already received a beacon after said fixed delay and a backoff period.

79. The method of claim 78 further comprising updating network time to match a time of said received beacon.

80. The method of claim 73 further comprising transmitting at least one frame following a short interframe space during said assigned time slot.

81. The method of claim 73 wherein said assigned time slot occurs at least one of after a prior time slot expires, after a wireless LAN station with said prior time slot transmits a null frame, after a wireless LAN station with said prior time slot transmits a frame with a predetermined sequence number, and after a wireless LAN station with said prior time slot transmits a frame with a predetermined duration value.

82. The method of claim 73 further comprising providing a Distributed Coordination Function (DCF) interval after a last one of said wireless LAN stations transmits data and before said wireless LAN stations transition to said low power mode.

83. The method of claim 73 further comprising:

regulating supply voltage during said active mode using a first voltage regulator that is powered down during said low power mode; and

using a second voltage regulator, which dissipates less power than said first voltage regulator, to regulate supply voltage during said low power mode; and

selecting said first voltage regulator during said active mode and said second voltage regulator during said low power mode.

84. The method of claim 73 wherein said wireless LAN stations are otherwise compliant with at least one of IEEE section 802.11, 802.11(a), 802.11(b), and 802.11(g).

85. The method of claim 73 wherein said LAN is an ad-hoc network.

86. The method of claim 73 wherein said wireless LAN stations are mobile stations in an ad-hoc network.

87. A method of operating a wireless LAN including first and second wireless stations, comprising:

selectively operating the first wireless station in low power and active modes;

initiating a LAN between the first and second wireless stations;

assigning predetermined time slots for transmitting data to other wireless stations joining said LAN using the first wireless station;

receiving one of said predetermined time slots at the second wireless station for transmitting data; and

transmitting data during said one of said predetermined time slots using the second wireless station.

88. The method of claim 87 further comprising transitioning the first wireless station to said active mode prior to a timing beacon.

89. The method of claim 87 further comprising transitioning the first wireless station to said low power mode prior to a subsequent beacon.

90. The method of claim 87 further comprising updating network time after said transition to said active mode.

91. The method of claim 90 wherein said network time is set equal to a prior beacon time plus a beacon interval minus a fixed delay.

92. The method of claim 91 further comprising transmitting a beacon if said first wireless station has not already received a beacon after said fixed delay and a backoff period.

93. The method of claim 92 further comprising updating network time to match a time of said received beacon.

94. The method of claim 87 further comprising transmitting at least one frame following a short interframe space during said assigned time slot.

95. The method of claim 87 wherein said assigned time slot occurs at least one of after a prior time slot expires, after a wireless LAN station with said prior time slot transmits a null frame, after a wireless LAN station with said prior time slot transmits a frame with a predetermined sequence number, and after a wireless LAN station with said prior time slot transmits a frame with a predetermined duration value.

96. The method of claim 87 further comprising providing a Distributed Coordination Function (DCF) interval after a last one of said wireless stations transmits data and before said transition to said low power mode.

97. The method of claim 87 wherein the first and second wireless station are compliant with at least one of IEEE section 802.11, 802.11(a), 802.11(b), and 802.11(g).

98. The method of claim 87 wherein the first and second wireless stations form an ad-hoc network.

99. The method of claim 87 wherein the first and second wireless stations are mobile stations in an ad-hoc network.

100. The wireless LAN station of claim 13 wherein said MAC device calibrates said first oscillator using said timing signal from said crystal oscillator.

101. The wireless LAN station of claim 49 wherein said MAC means calibrates said first oscillating means using said timing signal from said crystal oscillating means.

* * * * *