HydraFacial™ Nectre® SYSTEM

Service Manual

$10.00

2277 REDONDO AVENUE
SIGNAL HILL, CA 90755
USA

PHONE: (800) 603-4996 or (562) 597-0102
FAX (562) 597-0148

Eunsung v. HydraFacial
IPR2025-00453
HydraFacial Ex. 2037

P/N: 19350-A
Rev. 6/12/09

TABLE OF CONTENTS

1. Troubleshooting..... p. 2
2. Flow Diagram..... p. 5
3. Identify the Machine..... p. 6
4. Identify the Handpiece(s) ..... p. 7
5. Control Panel..... p. 8
6. Tubing Replacement..... p. 8
7. Fluid/Vacuum Couplings..... p. 9
8. Internal Manifold..... p. 9
9. Power Unit..... p. 10
10. Plastic Door..... p. 11
11. Cleaning your Handpiece(s)..... p. 12

Clean the machine after every use to maintain proper function and integrity of the unit

Problem	Cause	What to do
No Power (Stand-by indicator light not lit)	Main switch is off	Turn main switch ON
	No power to main AC outlet	Plug to a different outlet
	Loose connection on power jack	Using a small flat screwdriver, spring out the center terminal on the power jack
	Defective power supply	Check for DC voltage output (+12VDC)
Control Panel not responding	Touch slide in the wrong area	Slide or point your finger to the corresponding range with the silver area not the black or blue area
	Control panel touch area access or touched during power up calibration sequence	Turn the main switch OFF for 5 seconds and turn main switch ON and make sure that the control panel is free from any obstruction
	Defective control panel assembly	Refer to the control panel replacement section of the user manual for instructions

No Fluid Flow	Handpiece connector not fully engaged to panel connector	Reconnect coupling to panel connector. A clicking sound indicates a fully engaged connection
	Skin solution bottle empty	Check skin solution bottle
	Fluid manifold switch OFF	Turn switch ON 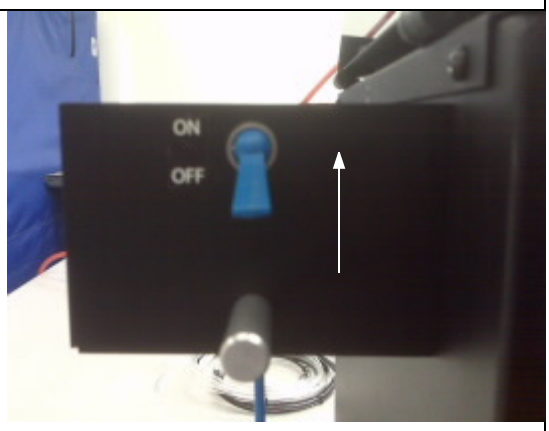
	Flow control setting	Adjust flow control setting to preffered setting
	Vacuum leak on tip and handpiece junction	Check and replace O – ring as needed
	Solid cartridge not properly engaged to spike for cartridge handpiece	Engage solid cartrige to spike by pushing into handpiece receiver
	No vacuum / weak vacuum	Refer to vacuum troubleshooting section of the Service manual
No Vacuum	Handpiece connector not fully engaged to panel connector	Reconnect coupling to panel connector. A clicking sound indicates a fully engaged connection
	Waste container full	Check / empty waist container

	Waste container float valve in the up position	Release float valve 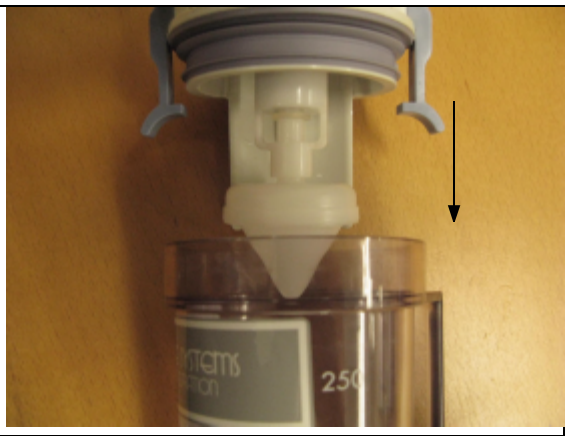
	Clogged handpiece	Refer to the Handpiece Cleaning section of the Service Manual
	System vacuum leak	Refer to the fluid and vacuum flow diagram section of the Service Manual

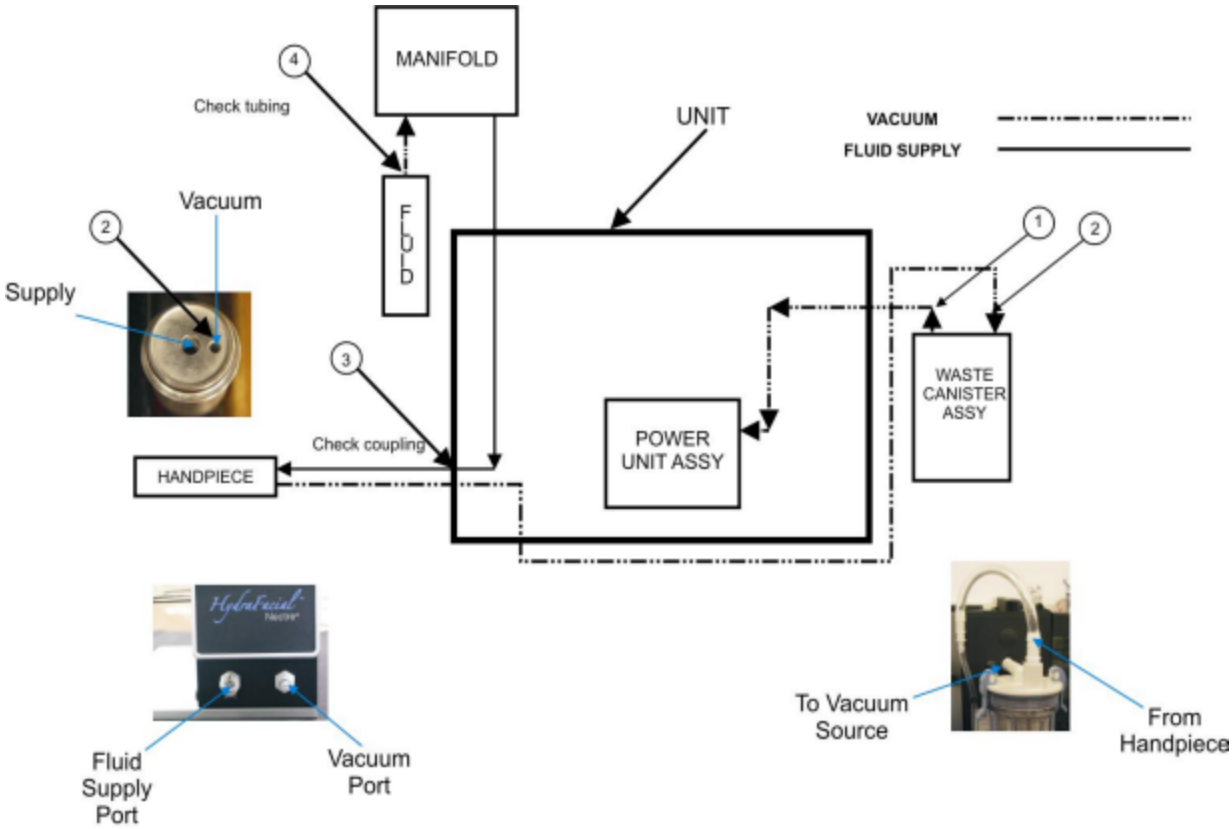

FLUID AND VACUUM FLOW BLOCK DIAGRAM
Check vacuum sequence as indicated by the number label

Check Point	**Action**
1.	Check vacuum source to ensure vacuum is being generated when unit is on
2.	Check for vacuum at the waste canister to ensure that the check valve is not closed and that there are no leaks at the waste canister. You can also check vacuum side of handpiece, as shown above
3.	Check for vacuum at the vacuum port as shown above; Vacuum check valve must be pushed in order to feel/hear vacuum
4.	Check tubing, coming from the manifold, that it is not clogged

Identify the Machine:

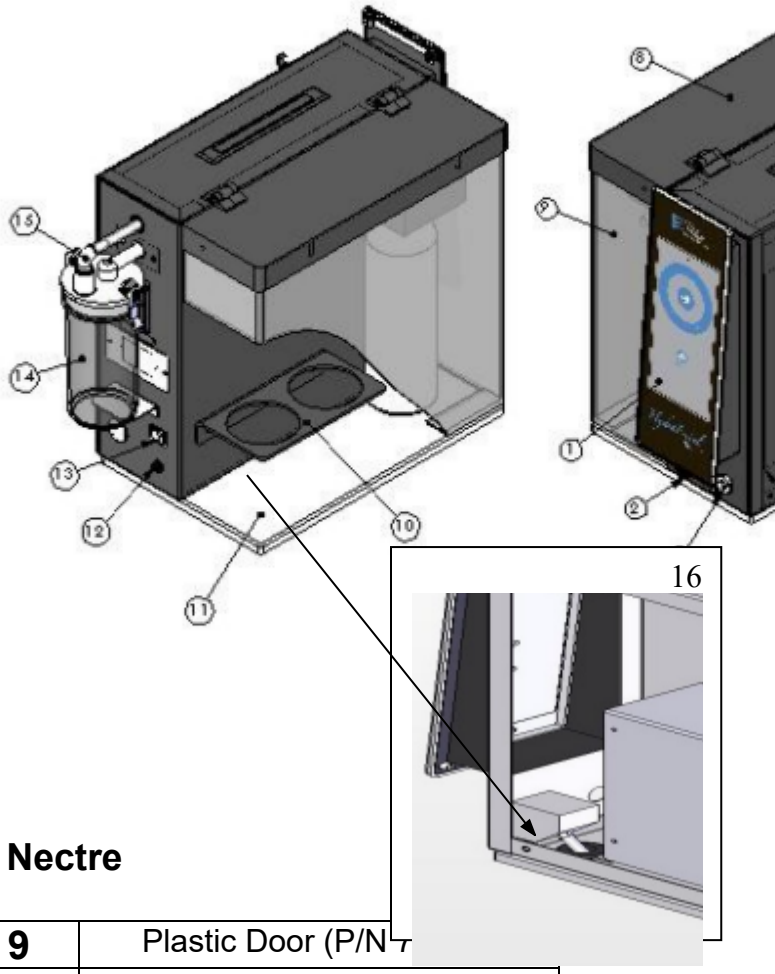

Hydrafacial Nectre

1	Control Panel (P/N 72129)	**9**	Plastic Door (P/N 7
2	Fluid Coupling (P/N 17502)	**10**	Bottle Holder (P/N 75048)
3	Vacuum Coupling (P/N 17566)	**11**	Base (P/N 73209)
4	Cover Shell (P/N 73207)	**12**	Power Connector (P/N 17565)
5	Tubing Clamps (P/N 16271)	**13**	On/Off Switch (P/N 17382)
6	Power Unit (P/N 71143)	**14**	Canister (P/N 74205)
7	Tool Holder (P/N 74208)	**15**	Canister Coupling (P/N 72065)
8	Door Cover (P/N 73208)	**16**	Internal Manifold (P/N 74227)

Identify the Handpiece(s):

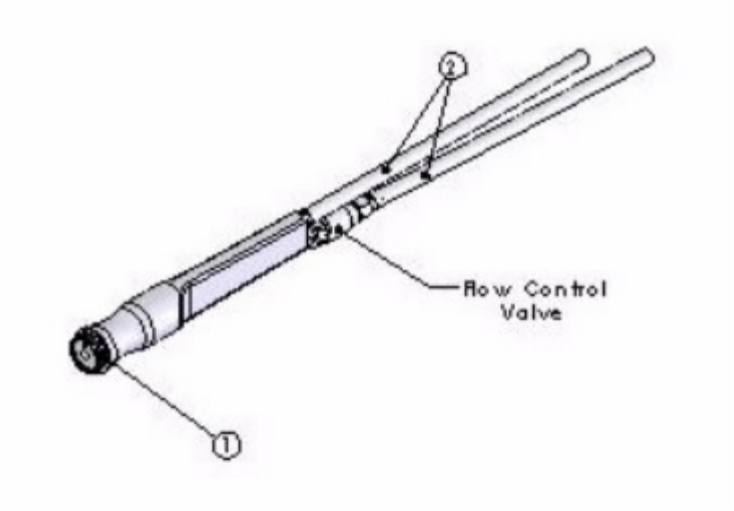

Standard Handpiece

1	O-Ring	**2**	Tubing (Replacement Avail.)

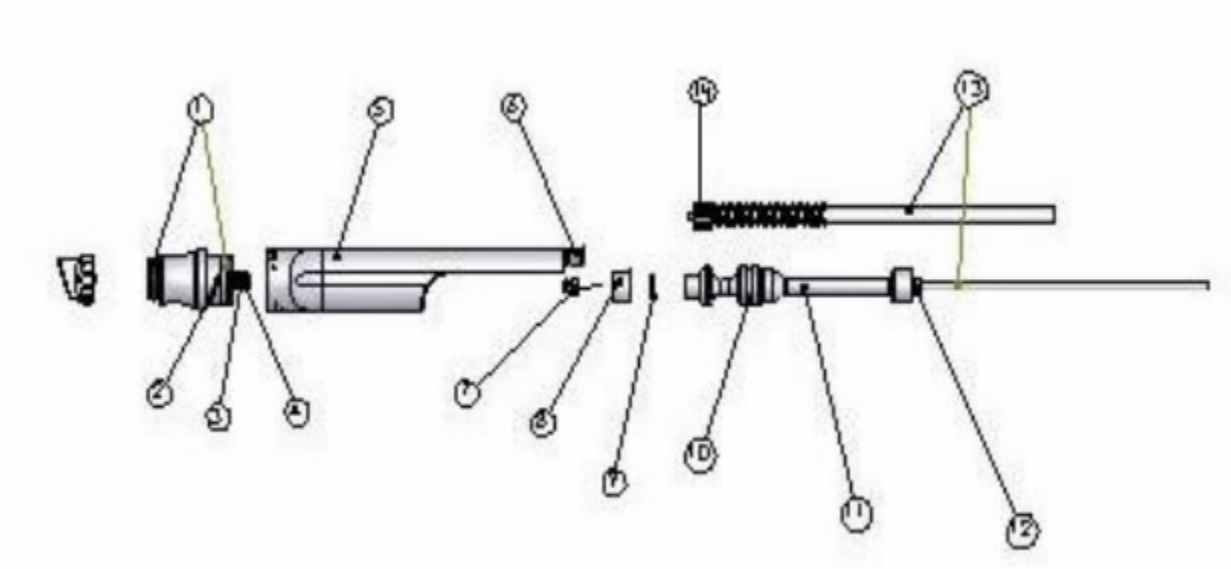

Cartridge Handpiece

1	EPDM O-Rings (-906)	**8**	Cap
2	Dowel Pins	**9**	Septa Seal
3	Viton O-Ring (-007)	**10**	EPDM O-Ring (-013)
4	EPDM Flat Washer	**11**	Cartridge
5	Handpiece Body	**12**	Barbed Fitting
6	Female Luer Lock	**13**	Tubing (Replacement Avail.)
7	Spike	**14**	Male Luer Lock

1. When replacing the Control Panel, first remove two Phillips screws from the top, along with the u-shaped bracket. Do the same for the bottom. Be careful when removing, as a connector on the back of the board needs to be disconnected prior. Once removed, replace with the new Control Panel. Reconnect the board with the connector and fasten panel to the unit with the two u-shaped brackets and four Phillips screws.

Control Panel

2. If the vacuum tubing needs replacing, slightly tilt the unit to the side so that the bottom can be visible. Simply pull the tubing off from the barb fitting that is threaded into the internal manifold. Disconnect the line from the canister and disengage from the clamps on the bottom and rear of the unit. Discard tubing and replace it with new tubing assembly by moistening the end of the tubing and connecting it to the barb fitting. Do a pull test just to be sure it was inserted properly. You may need a flashlight to illuminate the inside. Once the tubing is connected, engage the line to the clamps once again and to the canister.

Tubing Replacement

3. In order to replace the right coupling, simply use either a ½” deep socket wrench or a ½” open wrench to unscrew the coupling from the unit. Remove and replace it with a new coupling and fasten using either wrench. Fasten tightly. To replace the left coupling, remove the cover shell from the unit, as you may need to unscrew the nut off the coupling from the inside. Disconnect the tubing and use a 5/8” deep socket wrench (or a 5/8” open wrench for the outside) to unscrew the nut. Remove the coupling and nut and replace them with the new set of coupling. Orient it with the push-button facing downward as shown in the figure. Fasten tightly and reconnect the tubing. Place and fasten the cover shell back to the unit.

Fluid/Vacuum Couplings

4. If internal manifold is failing, it will need replacing. Remove the cover shell from the unit. Disconnect vacuum line from the barb fitting on the manifold and remove (2) #6-32 black screws from the front of the unit. Detach manifold from unit and replace it with a new manifold assembly. Attach new manifold to unit and fasten with same (2) #6-32 black screws. Orient with barb fitting facing base of unit. Reconnect vacuum line tubing to manifold and fasten cover shell back to the unit.

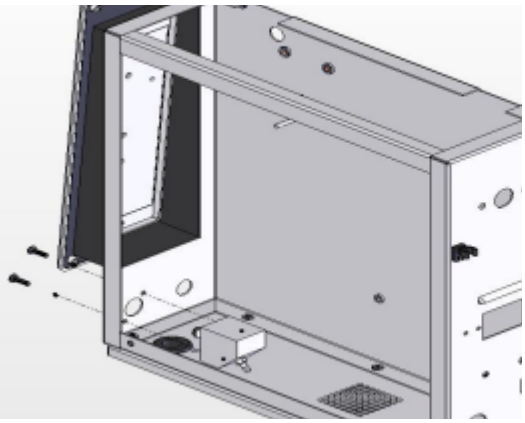

Internal Manifold

5. If replacing the Power Unit, first unfasten the cover shell by removing five Phillips screws, two on the outside of the unit and three on the inside by the door adaptor. When unfastened, remove the cover shell. The Power Unit should be visible. Disconnect the connector going to the board on the Control Panel and the connector on the backside of the Power Unit. After, remove four screws at the base of the Power Unit. (Note: Screws need to be removed from the bottom of the Unit). Remove the box and replace it with the new Power Unit. Fasten Power Unit to the base of the unit with the four screws that were previously removed. (Make sure it is oriented as shown in figure). Reconnect the box connector to the board on the Control Panel and the power connector to the back of the box. Place the cover shell back on the unit and refasten with five screws.

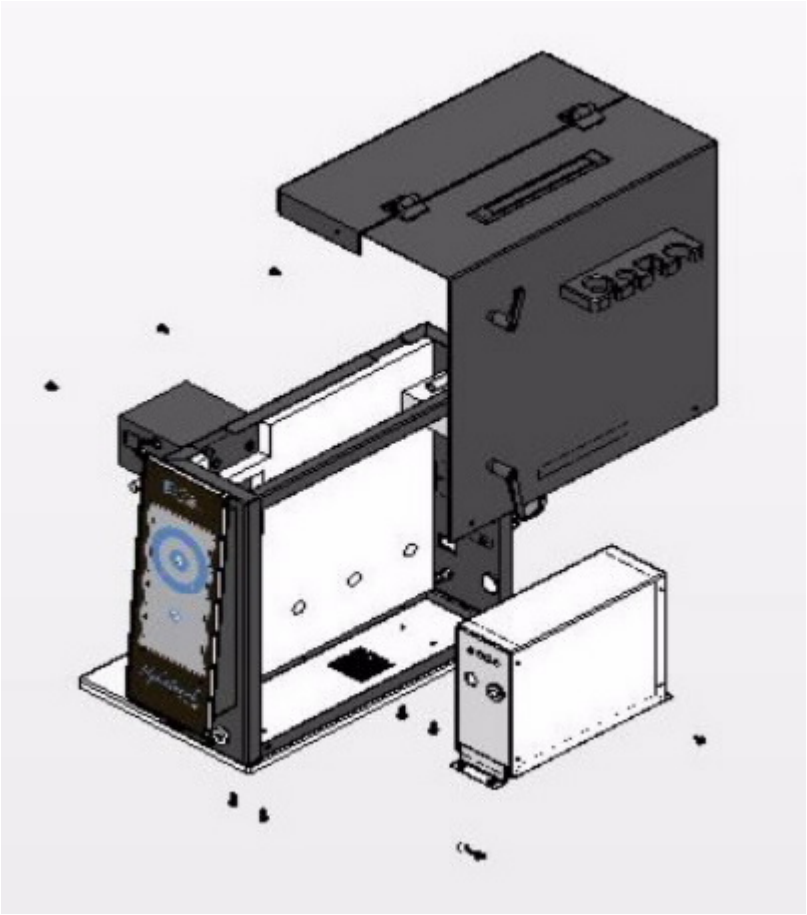

Power Unit

6. To replace plastic door, lift open the door so that the inside of the door adaptor is visible. Remove four kepnuts using an 11/32” socket wrench or open wrench and slide door off. Insert new door in and fasten with four kepnuts that were removed previously.

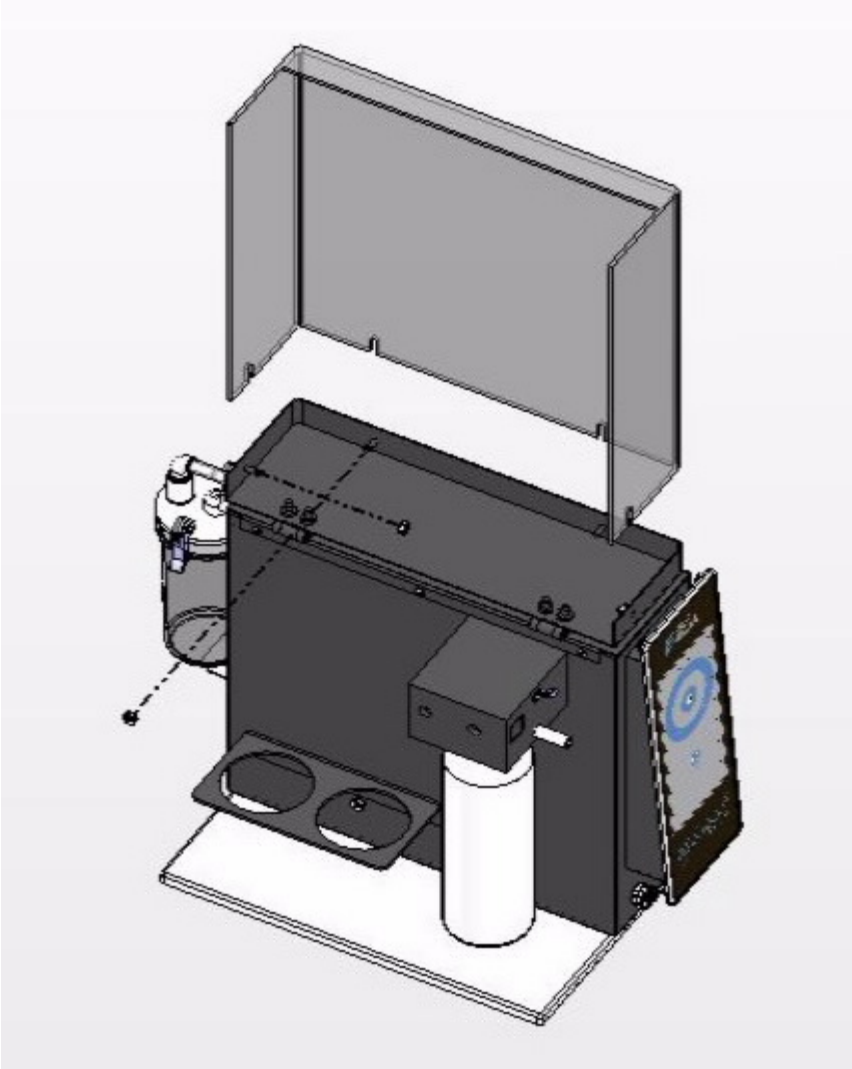

Plastic Door

HYDRAFACIAL™ PREVENTIVE MAINTENANCE AND SYSTEM CLEANING INSTRUCTIONS

I. HYDRAFACIAL SYSTEM CLEANING INSTRUCTIONS:

1. Wearing gloves is recommended.
2. After each service/treatment, run the "System Cleaning Process". Start by switching the blue toggle switch up to the ON position.
3. Make sure that the Rinseaway™ solution is properly installed. **ONLY USE THE EDGE SYSTEM™ RINSEAWAY™ SOLUTION**. This solution contains a biocide to properly clean your system. Partially used skin solution bottles must be capped and stored in a cool place.
4. Turn the Unit "ON" and set to the 4th LED.
5. **IMPORTANT: Use the cleaning cap (as shown) to occlude the hand piece and let the cleaning process run for 1 minute**. Can also be used as a protective cap.
6. When completed, be sure to switch the toggle switch to the OFF position.
7. Wash, dry and wipe/spray germicide over waste canister and lid. Leave open overnight to air-dry.

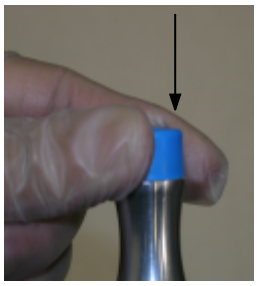

Put the cleaning cap on the handpiece

II. HYDRAFACIAL HANDPIECE CLEANING INSTRUCTIONS

The HydraFacial Standard Handpiece or Cartridge Handpiece skin solution tubing chambers must be cleaned and disinfected using the Cleaning Brush every week to prevent any bacteria contamination.

1. After completing the cleaning process in "Section 1: CLEANING INSTRUCTIONS", remove the blue cleaning cap.

<u>The Standard HydraFacial Valve Handpiece:</u>

Standard Handpiece:

2. Insert the Cleaning Brush into the vacuum (smaller) opening of the Standard handpiece. Push it in gently all the way, while rotating it in either direction. The Cleaning Brush may be generously moistened with a disinfectant before inserting it into any handpiece opening to be cleaned. A few drops of disinfectant may be dropped onto the "face" of the handpiece (held in an upright position) allowing the disinfectant to run into the handpiece opening before inserting the Cleaning Brush. (70% isopropynol alcohol is not suitable as a disinfectant).

   NOTE: Wash the brush bristles in soapy water between each handpiece opening insertion to clean off debris.

<u>The HydraFacial Cartridge Handpiece:</u>

Cartridge Handpiece:

a. Insert the Cleaning Brush into the vacuum (smaller) opening of the Cartridge Handpiece. Push it in gently all the way, while rotating in either direction. The Cleaning Brush may be generously moistened with a disinfectant before inserting it into any handpiece opening to be cleaned. A few drops of disinfectant may be dropped onto the “face” of the handpiece (held in an upright position) allowing the disinfectant to run into the handpiece opening before inserting the Cleaning Brush. (70% isopropynol alcohol is not suitable as a disinfectant).

NOTE: Wash the brush bristles in soapy water between each hand piece opening insertion to clean off debris.

b. Twist the Control Valve at the top of the handpiece to the large dot and pull outward to disassemble from the body of the handpiece. Using the Cleaning Brush, insert and clean each opening within both pieces of the handpiece. Reassemble the handpiece when cleaning is complete, by lining up the inner notches with the grooves and then press together and twist.

3. **Flush Handpiece:** Turn the toggle switch up to the ON position, turn unit ON and set the vacuum setting to the 4th LED. Press on the cleaning cap and flush through the handpiece and tubing for 1 minute.

   NOTE: Make sure that the Rinseaway™ solution is properly installed. **ONLY USE THE EDGE SYSTEM™ RINSEAWAY ™ SOLUTION**. This solution contains a biocide to properly clean your system. Partially used skin solution bottles must be capped and stored in a cool place.

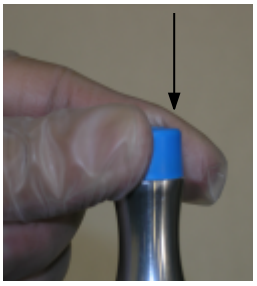

Put the cleaning cap on the handpiece