UNITED STATES PATENT AND TRADEMARK OFFICE

BEFORE THE PATENT TRIAL AND APPEAL BOARD

SINCLAIR PHARMA LIMITED, SINCLAIR PHARMA US, INC., VIORA, INC., EMA AESTHETICS LTD., AND AESTHETIC MANAGEMENT PARTNERS, LLC AND AESTHETIC MANAGEMENT PARTNERS, INC.,
Petitioner,

v.

HYDRAFACIAL LLC,
Patent Owner.

IPR2025-00145
Patent 11,865,287 B2

Before ERIC C. JESCHKE, CYNTHIA M. HARDMAN, and JAMIE T. WISZ, *Administrative Patent Judges.*

WISZ, *Administrative Patent Judge*.

DECISION
Granting Institution of *Inter Partes* Review
35 U.S.C. § 314

Dismissing Petitioner's Motion for Joinder
35 U.S.C. § 315(c); 37 C.F.R. § 42.122

EUNSUNG 1034
Eunsung v. Hydrafacial
IPR2025-00453

I. INTRODUCTION

Sinclair Pharma Limited, Sinclair Pharma US, Inc., Viora, Inc., EMA Aesthetics, Ltd., Aesthetic Management Partners, LLC, and Aesthetic Management Partners, Inc. (collectively "Petitioner") filed a Petition (Paper 2, "Pet.") requesting an *inter partes* review of claims 1–12, 14–20, 22–26, 28–37, and 39–45 of U.S. Patent No. 11,865,287 B2 (Ex. 1001, "the '287 patent") along with a Contingent Unopposed Motion for Joinder (Paper 3, "Motion for Joinder") to join IPR2024-01491 ("the -01491 IPR"). HydraFacial LLC ("Patent Owner") filed a Patent Owner Notice of Waiver of Patent Owner Preliminary Response (Paper 11, "Waiver"). Waiver, 1.[1]

Under 35 U.S.C. § 314(a), the Board "may not authorize an *inter partes* review to be instituted unless . . . the information presented in the petition . . . and any response . . . shows that there is a reasonable likelihood that the petitioner would prevail with respect to at least 1 of the claims challenged in the petition." After considering the Petition and the evidence of record, we determine that Petitioner has demonstrated a reasonable likelihood of prevailing with respect to at least one claim challenged in the Petition. Accordingly, we institute an *inter partes* review of claims 1–12,

[1] Patent Owner's Waiver states that "[p]ursuant to 37 C.F.R. § 42.107, Patent Owner HydraFacial LLC waives the filing of a Patent Owner's Preliminary Response (POPR) in this proceeding." Waiver, 2. The Waiver also states that, "Patent Owner preserves all arguments presented in its earlier POPR [in IPR2024-01491] and respectfully requests that the Board treat both Petitions consistently." *Id.* However, Patent Owner has explicitly waived the filing of a POPR in this case and, thus, has presented no arguments at this stage. Under 37 C.F.R. § 42.6(a)(3), "[a]rguments must not be incorporated by reference from one document into another document." Patent Owner may make its arguments in the Patent Owner Response.

14–20, 22–26, 28–37, and 39–45 of the ’287 patent, based on all of the grounds identified in the Petition. *See SAS Inst., Inc. v. Iancu*, 138 S. Ct. 1348, 1359–60 (2018); *PGS Geophysical AS v. Iancu*, 891 F.3d 1354, 1360 (Fed. Cir. 2018) (interpreting the statute to require “a simple yes-or-no institution choice respecting a petition, embracing all challenges included in the petition”); 37 C.F.R. § 42.108(a) (“When instituting *inter partes* review, the Board will authorize the review to proceed on all of the challenged claims and on all grounds of unpatentability asserted for each claim.”). We also dismiss Petitioner’s Motion for Joinder as moot for the reasons discussed below.

The following findings of fact and conclusions of law are not final, but are made for the sole purpose of determining whether Petitioner meets the threshold for initiating review. Any final decision shall be based on the full trial record, including any response timely filed by Patent Owner. Any arguments not raised by Patent Owner in a timely-filed Response may be deemed forfeited.

II. BACKGROUND

A. Real Parties in Interest

Petitioner identifies itself as the real party-in-interest. *See* Pet. 96. Patent Owner identifies itself and The Beauty Health Company as the real parties-in-interest. Paper 5, 1.

B. Related Matters

The parties identify the following International Trade Commission (“ITC”) and district court proceedings as involving the ’287 patent: *Certain Hydrodermabrasion Systems and Components Thereof*, Inv. No. 337-TA-1408 (ITC); *Certain Hydrodermabrasion Systems and Components Thereof II*, Inv. Nos. 337-TA-1416 (ITC); *HydraFacial LLC v. Luvo Medical*

Technologies et al., 2-24-cv-00587 (D. Utah); *HydraFacial LLC f/k/a Edge Systems LLC v. Sinclair Pharma Limited et al.*, 2-24-cv-06250 (C.D. Cal.); *HydraFacial LLC f/k/a Edge Systems LLC v. Aesthetic Management Partners, LLC et al.*, 2-24-cv-02480 (W.D. Tenn.); *HydraFacial LLC f/k/a Edge Systems LLC v. Cartessa Aesthetics, LLC*, 2-24-cv-04253 (E.D.N.Y.); *HydraFacial LLC f/k/a Edge Systems LLC v. Medicreations LLC*, 2-24-cv-00855 (D. Nev.); and *HydraFacial LLC et al. v. eMIRAmed USA LLC et al.*, 8-24-cv-01865 (C.D. Cal.). Pet. 96; Paper 5, 1.

C. The '287 Patent

The '287 patent is titled "Devices and Methods for Treating Skin." Ex. 1001, code (54). In the background section, the '287 patent explains that "[d]ermabrasion refers to a procedure in which the surface of the skin is removed due to mechanical rubbing by a handpiece with an abrasive element that is often in the form of a burr, wheel, or disc" and that it "tends to be painful and messy." *Id.* at 1:48–52. The procedure "leaves the skin red and raw-looking" and "removed skin can take several months to regrow and heal." *Id.* at 1:53–55. The '287 patent explains that a suction element can "decrease the mess caused by the process waste, such as removed skin and blood." *Id.* at 1:58–60.

As further background, the '287 patent explains that "[m]icrodermabrasion refers generally to a procedure in which the surface of the skin is removed due to mechanical rubbing by a handpiece emitting a stream of sand or grit." *Id.* at 1:65–67. As an example of microdermabrasion, the '287 patent describes using a handpiece "to direct an air flow containing tiny crystals of aluminum oxide, sodium chloride, or sodium bicarbonate." *Id.* at 2:1–3. The '287 patent also teaches that

"[m]icrodermabrasion removes moisture from the skin, so the procedure is always followed by the application of moisturizing creams." *Id.* at 2:16–18.

The '287 patent discloses "an apparatus for treating skin" that "deliver[s] fluid from at least one of the plurality of fluid sources to [a] handpiece assembly." Ex. 1001, 2:26–35. The apparatus has "a console with a user input device," a "handpiece assembly" that is "configured to treat skin," a "fluid line" that "provides fluid communication between the console and the handpiece assembly," and a "manifold system" that is "coupled to the console and controlled by the user input device, such as a computer, touchscreen, keyboard, and the like." *Id.* "The manifold system is configured to hold releasably a plurality of fluid sources and deliver fluid from at least one of the plurality of fluid sources to the handpiece assembly." *Id.* at 2:33–35. We reproduce Figure 1 from the '287 patent below.

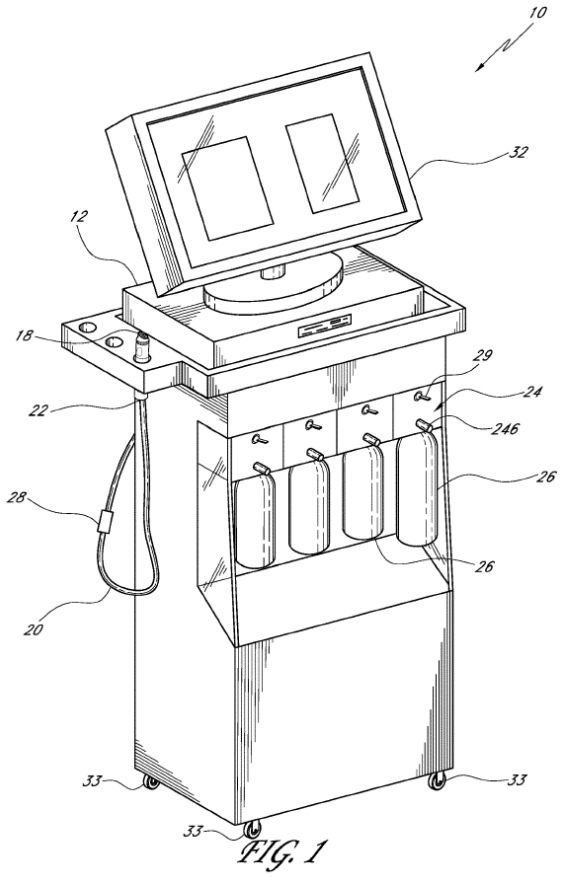

FIG. 1

Figure 1 "illustrates a skin treatment system 10" that includes a console 12, a handpiece assembly 18 connected to the console via a line 20, and a manifold system 24 that can control the flow of treatment material from containers 26 into and through line 20. *Id.* at 5:24–30.

D. Challenged Claims

Petitioner challenges claims 1–12, 14–20, 22–26, 28–37, and 39–45 of the '287 patent. Pet. 1. Of the challenged claims, claims 1, 11, 22, 26, and 37 are independent. Claim 1 is illustrative of the challenged claims, and is reproduced below:

> [1.pre] A system for treating skin, the system comprising:
>
> [1.1] a console configured to receive a first container and at least one additional container;
>
> [1.2] a handpiece configured to contact skin tissue of a subject; and
>
> [1.3] a block in the console, wherein the block is:
>
> > configured to selectively receive fluid from the first container when the first container is connected to the console;
> >
> > configured to selectively receive fluid from the at least one additional container when the at least one additional container is connected to the console; and,
> >
> > configured to selectively be in fluid communication with the handpiece through a first conduit when the handpiece is connected to the console;
>
> [1.4] a vacuum source, wherein the console comprises the vacuum source; and
>
> [1.5] wherein the handpiece is configured to be in fluid communication with the vacuum source through a second conduit when the handpiece is connected to the console;
>
> [1.6] wherein when the handpiece, the first container, the at least one additional container and a waste container are each

> connected to the console, the first container contains a first treatment fluid, and the at least one additional container contains an additional treatment fluid,
>
> [1.7] the handpiece is in fluid communication with the vacuum source and the waste container through the second conduit; and
>
> [1.8] the system is configured to deliver the first treatment fluid contained in the first container and the additional treatment fluid contained in the at least one additional container to the handpiece sequentially.

Ex. 1001, 21:25–57 (annotated with bracketed labels corresponding to the labels in the Petition (*see* Pet. vi, "Listing of Claims")).

E. The Asserted Grounds of Unpatentability

Petitioner asserts that claims 1–12, 14–20, 22–26, 28–37, and 39–45 of the '287 patent are unpatentable on the following grounds:

Ground	Claim(s) Challenged	35 U.S.C. §[2]	Reference(s)/Basis
1A	1–3, 8–12, 14–16, 22, 23, 26, 28, 29, 34–37, 39, 40, 45	103(a)	Karasiuk,[3] Palmer[4]
1B	1–10, 12, 17–20, 22–26, 28–36, 40–44	103(a)	Karasiuk, Palmer, Trueba[5]
2A	1–3, 8–12, 14–16,	103(a)	Greenberg[6]

[2] The Leahy-Smith America Invents Act, Pub. L. No. 112-29, 125 Stat. 284 (2011) ("AIA"), included revisions to 35 U.S.C. § 103 that became effective after the filing of the applications to which the '287 patent claims priority. Therefore, we apply the pre-AIA version of 35 U.S.C. § 103.
[3] Karasiuk, US 2003/0212415 A1, published Nov. 13, 2003 (Ex. 1004, "Karasiuk").
[4] Palmer et al., U.S. Patent No. 5,199,604, issued Apr. 6, 1993 (Ex. 1005, "Palmer").
[5] Trueba, U.S. Patent No. 6,684,880, issued Feb. 3, 2004 (Ex. 1008, "Trueba").
[6] Greenberg, US 2003/0093089 A1, published May 15, 2003 (Ex. 1006, "Greenberg").

Ground	Claim(s) Challenged	35 U.S.C. §[2]	Reference(s)/Basis
	22, 23, 26, 28, 29, 34–37, 39, 40, 45		
2B	1–10, 12, 17–20, 22–26, 28–36, 40–44	103(a)	Greenberg, Trueba

Pet. 2. Petitioner also relies on the Declarations of Eric Simon (Ex. 1003) and Harold Walbrink (Ex. 1028).[7]

III. ANALYSIS

A. Principles of Law

A claim is unpatentable under 35 U.S.C. § 103(a) if the differences between the claimed subject matter and the prior art are such that the claimed subject matter, as a whole, would have been obvious at the time the invention was made to a person having ordinary skill in the art to which the claimed subject matter pertains. *See also KSR Int'l Co. v. Teleflex Inc.*, 550 U.S. 398, 406 (2007). The question of obviousness is resolved on the basis of underlying factual determinations, including: (1) the scope and content of the prior art; (2) any differences between the claimed subject matter and the prior art; (3) the level of skill in the art; and (4) when in evidence, objective evidence of non-obviousness, i.e., secondary considerations. *See Graham v. John Deere Co.*, 383 U.S. 1, 17–18 (1966).

[7] Petitioner retained Harold Walbrink as a declarant in this proceeding. Pet. 1. Mr. Walbrink has adopted the opinions set forth in the Declaration of Mr. Simon (Ex. 1003) as his own. Ex. 1028 ¶ 20. According to Petitioner, "for expediency, this Petition cites only to [Ex. 1003]." Pet. 1 n.1. In this Decision, we similarly cite to Mr. Simon's Declaration (Ex. 1003) in order to be consistent with the citations in the Petition and to avoid confusion.

"The combination of familiar elements according to known methods is likely to be obvious when it does no more than yield predictable results." *KSR*, 550 U.S. at 416. "[W]hen the question is whether a patent claiming the combination of elements of prior art is obvious," the answer depends on "whether the improvement is more than the predictable use of prior art elements according to their established functions." *Id.* at 417. It is generally obvious to those skilled in the art to substitute one known equivalent for another. *See In re Omeprazole Patent Litig.*, 483 F.3d 1364, 1374 (Fed. Cir. 2007) ("[T]his court finds no . . . error in [the] conclusion that it would have been obvious to one skilled in the art to substitute one ARC [alkaline reactive compound] for another."); *see also Wm. Wrigley Jr. Co. v. Cadbury Adams USA LLC*, 683 F.3d 1356, 1364 (Fed. Cir. 2012) (the combination of known elements and substitution of one well known agent for another is obvious).

B. Level of Ordinary Skill in the Art

In determining the level of skill in the art, we consider the type of problems encountered in the art, the prior art solutions to those problems, the rapidity with which innovations are made, the sophistication of the technology, and the educational level of active workers in the field. *Custom Accessories, Inc. v. Jeffrey-Allan Indus., Inc.*, 807 F.2d 955, 962 (Fed. Cir. 1986).

Petitioner, relying on the testimony of Mr. Simon, contends that a person of ordinary skill in the art ("POSITA") as of the relevant date

> would have had an undergraduate degree (B.S.) in Mechanical Engineering or equivalent knowledge, training, or experience, with two years of work experience in the design of mechanical products, design of fluidic systems, and/or the design of devices intended for medical or cosmetological applications. Additional

> education or industry experience may compensate for a deficit in one of the other aspects of the requirements stated above.

Pet. 3 (citing Ex. 1003 ¶¶ 13, 14).

Because Petitioner's proposed definition is unopposed at this stage and is not inconsistent with the cited prior art, we adopt it for the purposes of this Decision.

C. Claim Construction

We interpret a claim "using the same claim construction standard that would be used to construe the claim in a civil action under 35 U.S.C. 282(b)." 37 C.F.R. § 42.100(b) (2024). Under this standard, we construe the claim "in accordance with the ordinary and customary meaning of such claim as understood by one of ordinary skill in the art and the prosecution history pertaining to the patent." *Id.*

Petitioner contends that no formal claim constructions are necessary. Pet. 2. As explained in Section III.F.3. below, we invite the parties to further brief the appropriate constructions for the terms "fluid," "treatment fluid," "fluid communication," and "treatment material" in the challenged claims. We will address the appropriate constructions of these terms on a full trial record as needed. However, for purposes of this Decision, we determine that no terms require express construction. *See Nidec Motor Corp. v. Zhongshan Broad Ocean Motor Co.*, 868 F.3d 1013, 1017 (Fed. Cir. 2017) (citing *Vivid Techs., Inc. v. Am. Sci. & Eng'g, Inc.*, 200 F.3d 795, 803 (Fed. Cir. 1999) ("[O]nly those terms need be construed that are in controversy, and only to the extent necessary to resolve the controversy.")).

D. Asserted Obviousness of Claims 1–3, 8–12, 14–16, 22, 23, 26, 28, 29, 34–37, 39, 40, and 45 over Karasiuk and Palmer (Ground 1A)

Petitioner contends that claims 1–3, 8–12, 14–16, 22, 23, 26, 28, 29, 34–37, 39, 40, and 45 are rendered obvious over Karasiuk and Palmer. Pet. 5–49.

1. Karasiuk (Ex. 1004)

Karasiuk, titled "Skin Treatment System and Method of Use," is "directed to a microdermabrasion device, microdermabrasion system employing the device and method of performing microdermabrasion." Ex. 1004, code (54), ¶ 14. Karasiuk discloses a microdermabrasion system that includes an applicator tool with a substantially non-abrasive tip adapted to contact the skin, and means for applying a vacuum through an opening in the non-abrasive tip. *Id.* ¶ 16. The applicator tool contains an abrasive member, and upon application of vacuum through the opening, a portion of the skin is drawn into contact with the abrasive member. *Id.*

Figure 6 of Karasiuk is reproduced below.

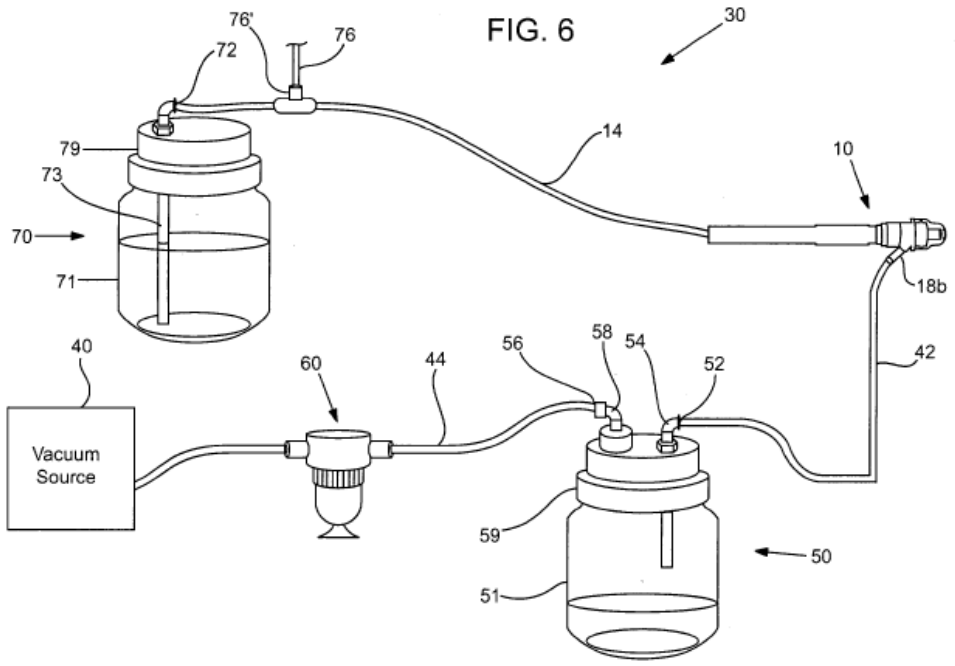

Figure 6 depicts a microdermabrasion system 30 that includes a device 10 with vacuum opening 18b connected with a vacuum source 40 by vacuum line 42. Ex. 1004 ¶ 56. A collection reservoir 50 and, optionally, an inline filter 60 are connected in the vacuum line between device 10 and vacuum source 40. *Id.* Vacuum line 42 connects to an input 52 to collection reservoir 50 via elbow 54, and output 56 connects with a second vacuum line 44 via elbow 58. *Id.* A manifold cover 59 sealably interfaces the input (52, 54) and output (56, 58) connections with a reservoir 51, which is typically a jar made of glass or plastic. *Id.* An extension tube 53 connects with input 52, 54 and extends into the reservoir 51 to ensure effective delivery of waste materials (abraded skin particles and, optionally, fluids) to reservoir 51. *Id.*

For use in microdermabrasion, "the fluid contents in fluid reservoir 70 are drawn through tube 14 and into device 10 where they flow out of the cannula 16 through openings 16d and are applied to the skin." Ex. 1004 ¶¶ 63–64. "As the flow of the fluids continues out of the vacuum head base and into vacuum line 42, it carries with it the exfoliated skin particles and any other waste that is removed through the microdermabrasion process." *Id.* ¶ 66.

Karasiuk was published on November 13, 2003, and Petitioner contends that it qualifies as prior art under 35 U.S.C. § 102(b). Ex. 1004, code (43); Pet. 2.

2. Palmer (Ex. 1005)

Palmer is titled "Irrigation System and Method for Delivering a Selected One of Multiple Liquid Solutions to a Treatment Site" and "relates generally to methods and apparatus for delivering liquid solutions to treatment sites, such as in connection with periodontic procedures, and more

particularly, to irrigation systems and methods for delivering a selected one of multiple liquid solutions to a treatment site." Ex. 1005, code (54), 1:10–15.

Figure 1 of Palmer is reproduced below.

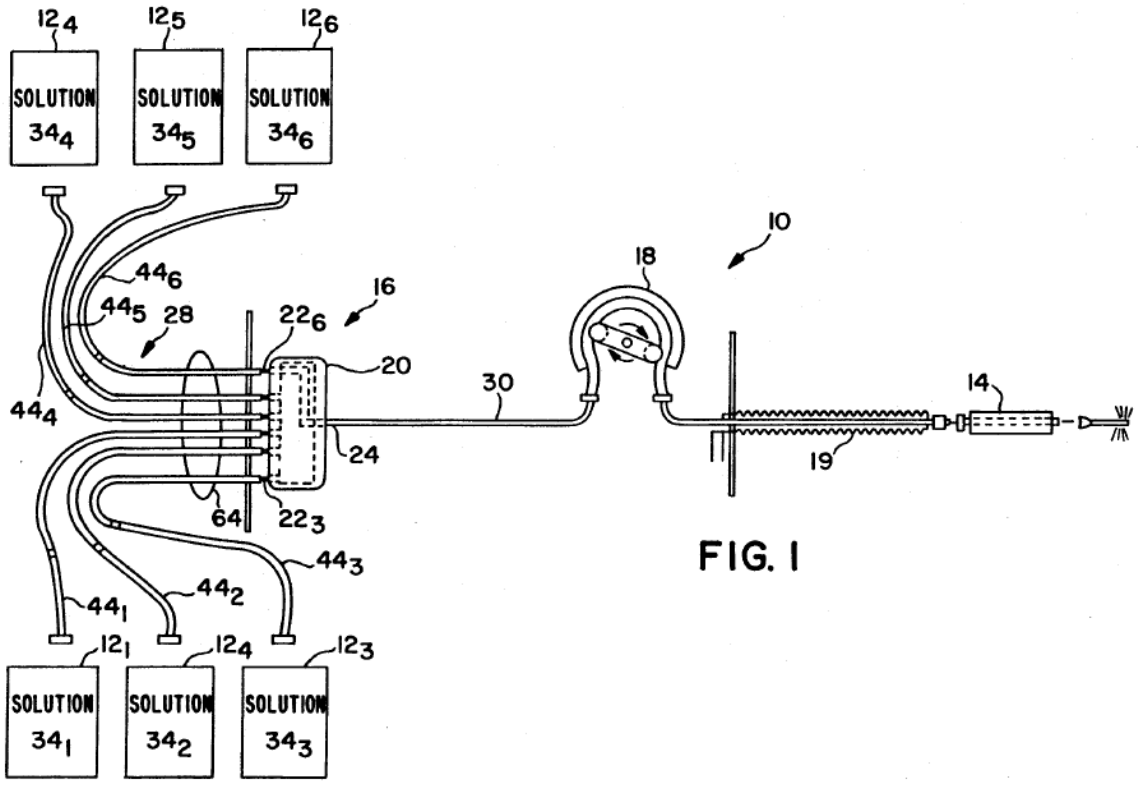

Figure 1 illustrates irrigation system 10 comprising a plurality of solution reservoirs 12, hand-piece means 14 for delivering a selected one of the liquid solutions contained in one of the reservoirs 12, liquid solution coupling and selector means 16, pump means 18, and heating means 19. Ex. 1005, 4:54–68. The liquid solution coupling and selector means 16 includes a selector valve means 20 having a plurality of inputs 22, an output 24, and means for coupling a selected one of the inputs 22 to the output 24. *Id.* at 5:1–4.

Figure 11B from Palmer is shown below:

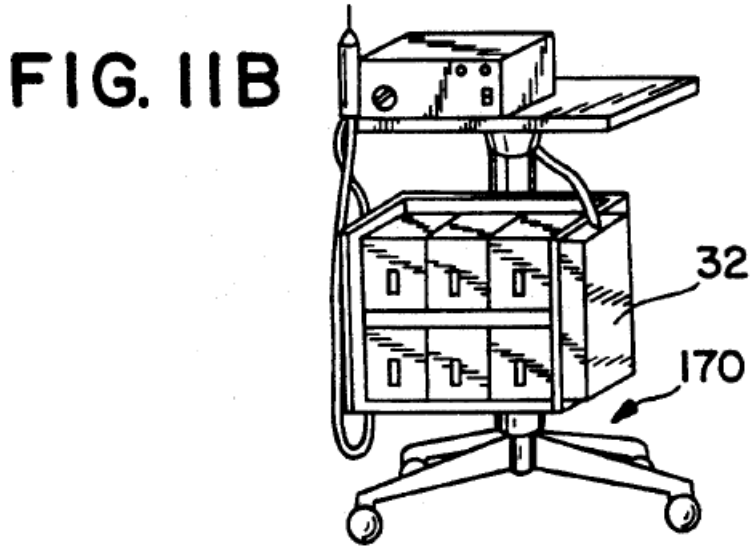

Figure 11B depicts the reservoir storage means 32 on mobile cart 170. Ex. 1005, 9:66–10:2. The reservoir storage means 32 can be in the form of modular single-shelf racks in order to provide "a high degree of flexibility." *Id.* at 9:63–66.

Palmer was published on April 6, 1993, and Petitioner contends that it qualifies as prior art under 35 U.S.C. § 102(b). Ex. 1005, code (45); Pet. 2.

3. Petitioner's Position

Petitioner contends that the combined teachings of Karasiuk and Palmer render the challenged claims obvious because one of ordinary skill in the art would have modified Karasiuk's reservoir 70 based on Palmer's teachings of multiple containers (e.g., reservoirs 12_1–12_6) and selector means 16 as shown in Petitioner's modified Figure 6 from Karasiuk reproduced below:

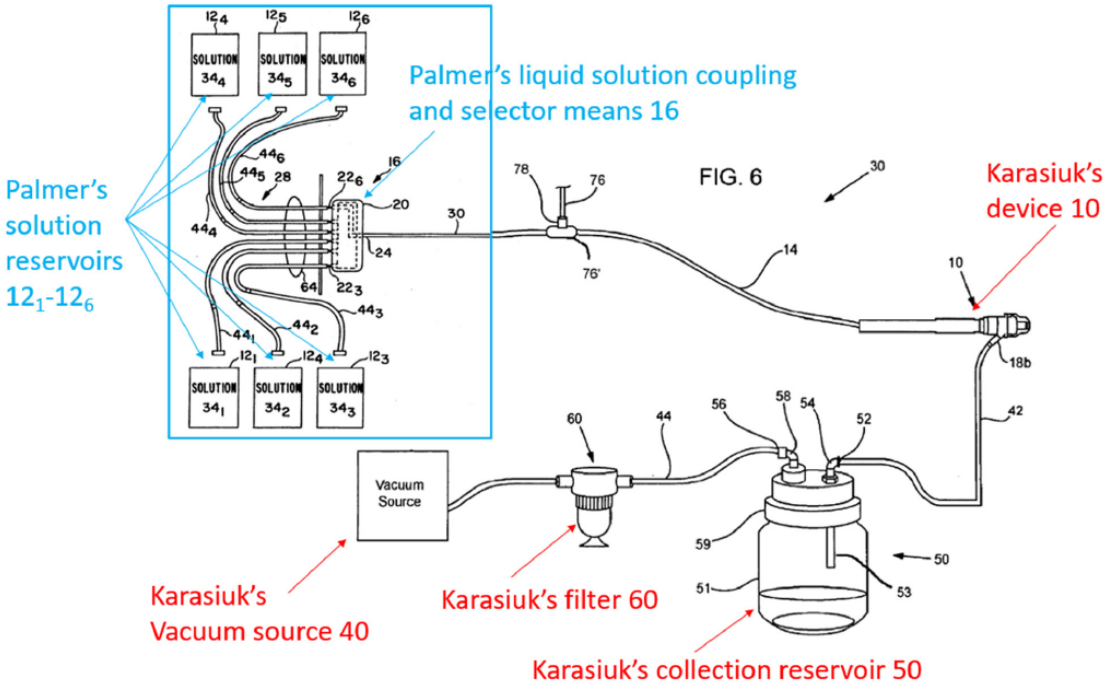

Pet. 7. Modified Figure 6 from Karasiuk illustrates the use of Palmer's solution reservoirs 12 and liquid solution coupling and selector means 16 in place of Karasiuk's single fluid reservoir 70. *See id.*

According to Petitioner, in such a combination, Karasiuk's vacuum source would be used to pump treatment solutions from Palmer's multiple fluid containers and collect waste/debris. Pet. 7 (citing Ex. 1003 ¶ 72; Ex. 1004 ¶¶ 20, 56, 64–66). "Instead of being connected to single reservoir 70, Karasiuk's tube 14 (e.g., upstream of breather line 76) would replace, or be connected to, Palmer's second tubing means 30 to achieve benefits resulting from selection of different treatment solutions." *Id.* at 7–8. Petitioner further contends that:

> Additionally, a POSITA would have been motivated and found it obvious to place (1) multiple containers and selector means (as taught by Palmer) and (2) handheld device 10, collection reservoir 50, vacuum source 40, and other relevant components (as taught by Karasiuk) in a modular structure (e.g.,

> Palmer's mobile cart 170) for known benefits, such as increased portability and organization.

Id. at 8 (citing Ex. 1003 ¶ 73).

Petitioner also discusses several reasons that would have prompted a person of ordinary skill in the art to modify Karasiuk's system based on Palmer's teachings. Pet. 8–11. For example, according to Petitioner, "[b]ased on general knowledge and Karasiuk's disclosure, a POSITA would have recognized the desirability of using multiple types of treatment solutions during microdermabrasion" and "would have been motivated to consider using multiple containers of treatment solutions to improve flexibility and functionality offered by Karasiuk's system." *Id.* at 9 (citing Ex. 1003 ¶¶ 78–80; Ex. 1004 ¶¶ 24, 47, 61, 70). Petitioner further asserts that the combination of the systems of Karasiuk with Palmer "would enable sequential delivery of different treatment solutions" and "would minimize refilling downtime because when a particular container runs out mid-operation, the combined system can quickly switch to a second container to keep the supply flowing." *Id.* at 10 (citing Ex. 1003 ¶¶ 86–87; Ex. 1011, 2:7–10).

Lastly, Petitioner contends that "a POSITA would have been motivated to adopt Palmer's modular design to provide added flexibility, organization, and portability." Pet. 11 (citing Ex. 1003 ¶ 88; Ex. 1005, 9:58–10:2). Specifically, Petitioner cites to Palmer's disclosure that "[b]y providing the reservoir storage means 32 in the form of modular single-shelf racks, a high degree of flexibility is provided" and "the reservoir storage means can be placed on a countertop 168 (FIG. 11A), or on a mobile cart 170 (FIG. 11B) or in a cabinet 172 underneath a counter (FIG. 11C)." *Id.* (citing Ex. 1005, 9:58–10:2). According to Petitioner, a person of ordinary

skill in the art would have viewed these modular/mobile benefits of Palmer as applicable to microdermabrasion systems like Karasiuk's. *Id.* (citing Ex. 1003 ¶ 88).

Petitioner also contends that a person of ordinary skill in the art would have had a reasonable expectation of success in combining the systems of Karasiuk and Palmer because both are directed to medical devices that deliver treatment solutions to treatment sites via a handpiece and, "[a]lthough Palmer describes an example of dental work, Palmer's disclosure 'relates generally to methods and apparatus for delivering liquid solutions to treatment sites.'" Pet. 11 (citing Ex. 1001, 6:53–56; Ex. 1003 ¶¶ 89–90; Ex. 1004, Abstract, ¶¶ 13–15, Fig. 6; Ex. 1005, Abstract, 1:10–15, Fig. 1; Ex. 1006 ¶ 3). According to Petitioner, "[f]rom this, a POSITA would have understood and found obvious that Palmer's teachings are applicable to delivering fluids for other medical procedures (e.g., microdermabrasion)." *Id.* at 11–12 (citing Ex. 1003 ¶ 89). Petitioner concludes that, "[r]eplacement of Karasiuk's reservoir 70 with Palmer's multiple containers and selector means reflects a simple substitution of a known element for another to obtain predictable results—allowing selection of different treatment solutions." *Id.* (citing Ex. 1003 ¶ 90).

Petitioner also provides an analysis as to where the limitations of the challenged claims are disclosed or suggested by the combined disclosures of Karasiuk and Palmer. *See* Pet. 12–49.

4. Analysis

For purposes of deciding whether to institute trial, we find that the present record sufficiently shows that the combination of Karasiuk and Palmer discloses or suggests the limitations of the challenged claims. We also credit the unrebutted testimony of Mr. Simon that a person having

ordinary skill in the art would have been motivated to combine the multiple containers, selector means, and modular structure as taught by Palmer, with the handheld device, collection reservoir, vacuum source, and other relevant components taught by Karasiuk for the reasons discussed herein and of record. On the current record, we further credit the unrebutted testimony of Mr. Simon that a person of ordinary skill in the art would have had a reasonable expectation of success in such a combination. Accordingly, on the present record, we conclude there is a reasonable likelihood that Petitioner will succeed in demonstrating that claims 1–3, 8–12, 14–16, 22, 23, 26, 28, 29, 34–37, 39, 40, and 45 of the ’287 patent are rendered obvious by the combined disclosures of Karasiuk and Palmer.

E. Asserted Obviousness of Claims 1–10, 12, 17–20, 22–26, 28–36, and 40–44 over Karasiuk, Palmer, and Trueba (Ground 1B)

Petitioner contends that claims 1–10, 12, 17–20, 22–26, 28–36, and 40–44 are rendered obvious over Karasiuk, Palmer, and Trueba. Pet. 49–56.

1. Trueba (Ex. 1008)

Trueba is titled “Applicator for Dispensing Bioactive Compositions and Methods for Using the Same” and “relates to administration of compositions (such as pharmaceutical compositions), including compositions administered topically or delivered to a mucous membrane, such as via inhalation.” Ex. 1008, code (54), 1:8–11.

Figure 3 of Trueba is reproduced below.

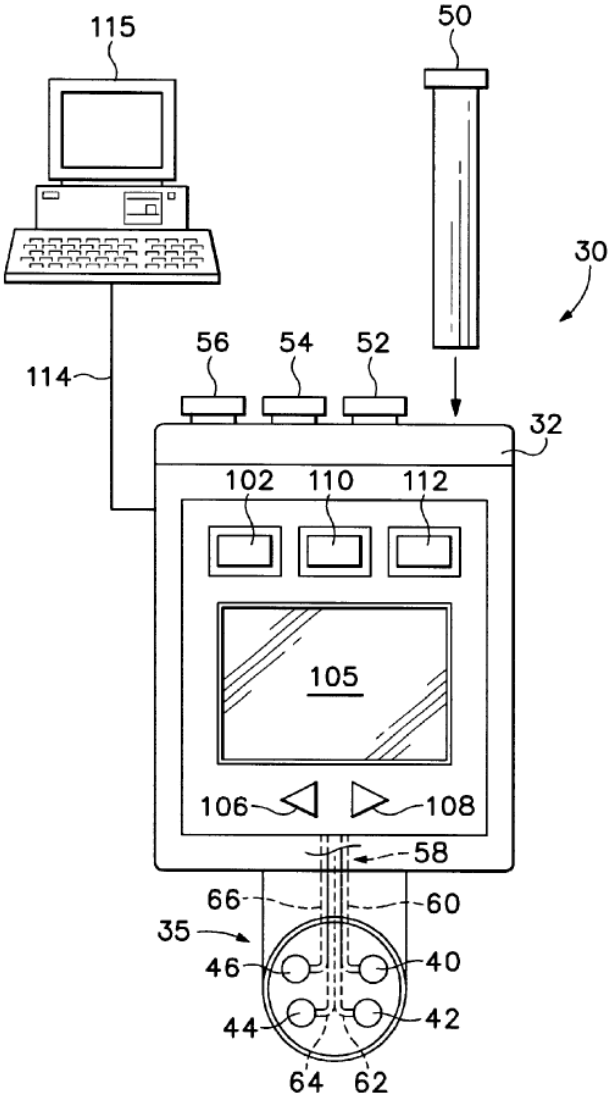

FIG.3

Figure 3 illustrates "a mucosal or inhalational application system 20 for administering a bioactive composition to a subject, such as a pulmonary inhaler." Ex. 1008, 8:49–52. Trueba discloses that "[i]n alternative embodiments, the mucosal application system may be a different type of inhaler, such as a nasal inhaler, or a different type of applicator, such as a topical applicator." *Id.* at 8:52–55. "Controller 100 operates to apply firing signals to the ejection heads 40–46, which respond by ejecting fluid from

reservoirs 50–56." *Id.* at 10:60–62. The controller 100 may be programmed to display various selections on screen 105, which can also be a touch screen. *Id.* at 11:44–51. Computerized control of medication dosing may be programmed by medical personnel and the controller may also be programmed to permit certain ranges of doses to be administered. *Id.* at 6:6–9, 12:2–6.

Trueba was published on February 3, 2004, and Petitioner contends that it qualifies as prior art under 35 U.S.C. § 102(b). Ex. 1008, code (45); Pet. 2.

2. Petitioner's Position

Petitioner contends that the combined teachings of Karasiuk, Palmer, and Trueba render the claims obvious because one of ordinary skill in the art would have modified Karasiuk-Palmer's system based on Trueba's teachings of computer control and display. Pet. 51 (citing Ex. 1003 ¶¶ 253–268). According to Petitioner, "in the resulting system, Karasiuk-Palmer's selector means (e.g. Palmer's selector valve 20) would be controlled by a computer (e.g., Trueba's controller 100), which is controlled by a user input (e.g., Trueba's touch screen 105), to control the flow of treatment solutions from containers (e.g., Palmer's reservoirs 12_1-12_6), so that a user can use the user input device to select a flow of fluids from the containers." *Id.* (citing Ex. 1003 ¶ 253). The combined device would also include a display (e.g., Trueba's touch screen 105) that indicates which solution is being delivered. *Id.*

Petitioner asserts that a person having ordinary skill in the art would have been motivated to modify Karasiuk-Palmer's system by including Trueba's computer display for several benefits, such as added precision, automation, and clarity. Pet. 51 (citing Ex. 1003 ¶¶ 254–268). According to

Petitioner, "in the combination, Trueba would allow programming delivery of different treatment materials at different times and thus allow automated delivery following complex administration protocols." *Id.* at 51–52 (citing Ex. 1008, 3:34–38, 4:65–5:17, 6:1–9, 6:27–7:9, 10:52–11:49, Fig. 1; Ex. 1003 ¶ 255).

According to Petitioner, "Trueba's techniques offer additional benefits in that '[c]omputerized control of medication dosing, which may be programmed by medical personnel for subsequent automated delivery, can help avoid toxic drug interactions, overdoses, and death.'" Pet. 52 (citing Ex. 1008, 6:1–9, 12:2–5; Ex. 1003 ¶ 256). Petitioner further contends that the combination would benefit from Trueba's touch screen, which "indicate[s] which selections have been made" and displays "information such as desired dosages, frequency, and potential side effects." *Id.* (citing Ex. 1008, 11:42–12:8, Fig. 3; Ex. 1003 ¶¶ 257, 264 (citing Ex. 1014)).

With supporting testimony from Mr. Simon, Petitioner asserts that a person having ordinary skill in the art would have had a reasonable expectation of success in implementing the combined teachings of Karasiuk, Palmer, and Trueba given the technical similarities between the references and alleges that the combination would merely constitute the use of a known technique to improve similar devices in the same way. *Id.* at 52–53 (citing Ex. 1003 ¶¶ 258, 265).

Petitioner also provides an analysis as to where the limitations of the challenged claims are disclosed or suggested by the combined disclosures of Karasiuk, Palmer, and Trueba. *See* Pet. 53–56.

3. Analysis

For purposes of deciding whether to institute trial, we find that the present record sufficiently shows that the combination of Karasiuk, Palmer,

and Trueba discloses or suggests the limitations of the challenged claims. We also credit the unrebutted testimony of Mr. Simon that a person having ordinary skill in the art would have been motivated to modify the combined system of Karasiuk and Palmer by including Trueba's computer control for the reasons discussed herein and of record. On the current record, we further credit the unrebutted testimony of Mr. Simon that a person having ordinary skill in the art would have had a reasonable expectation of success in implementing such a combination. Accordingly, on the present record, we conclude there is a reasonable likelihood that Petitioner will succeed in demonstrating that claims 1–10, 12, 17–20, 22–26, 28–36, and 40–44 of the '287 patent are rendered obvious by the disclosures of Karasiuk, Palmer, and Trueba.

F. Asserted Obviousness of Claims 1–3, 8–12, 14–16, 22, 23, 26, 28, 29, 34–37, 39, 40, and 45 over Greenberg (Ground 2A)

Petitioner contends that claims 1–3, 8–12, 14–16, 22, 23, 26, 28, 29, 34–37, 39, 40, and 45 are rendered obvious over Greenberg. Pet. 56–90.

1. Greenberg (Ex. 1006)

Greenberg is titled "Apparatus for Variable Micro Abrasion of Human Tissue and/or Hides Using Different Size and Types of Abrasive Particles" and describes "a micro-abrasion apparatus that may use a plurality of containers, each container having different size and/or types of particles, or by an apparatus with at least one container, where said particles used are ones that when treating the skin impart essential oils, fragrances or other substances to the skin." Ex. 1006, code (54), ¶ 12.

Greenberg's system includes: (1) "a pneumatic source operatively connected to a recovery container and to a hand tool"; (2) "a plurality of supply containers including particulates"; and (3) "a valve selectively

connecting said pneumatic source, recovery container and hand tool to a selected one of said supply containers." Ex. 1006 ¶¶ 13–16. In operation, the pneumatic source "provides for an air flow through the recovery container, hand tool and the selected supply container in communication with same, drawing said particles from the supply container through the hand tool and into the recovery container, said hand tool positioned on a surface to be treated and including an aperture so located that particles passing through said hand tool are caused to impinge on the surface thereby treating it." *Id.* ¶ 17.

Figure 1 of Greenberg is reproduced below.

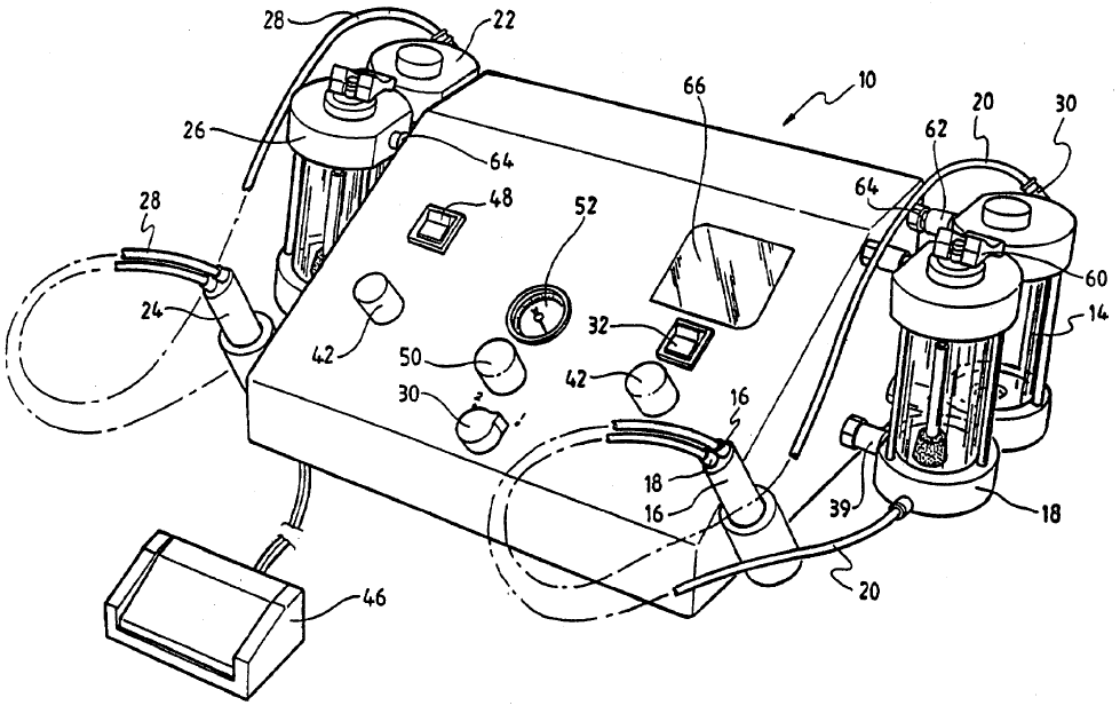

FIG 1

Figure 1 illustrates an apparatus 10 for making abrasions including a vacuum pump 12 operatively connected in series to either a first assembly including a recovery container 14, a handle 16, and a supply container 18 by tubes 20, or operatively connected to a second assembly including a recovery

container 22, a handle 24, and a supply container 26 by tubes 28. Ex. 1006 ¶ 49.

Figure 5 of Greenberg is shown below.

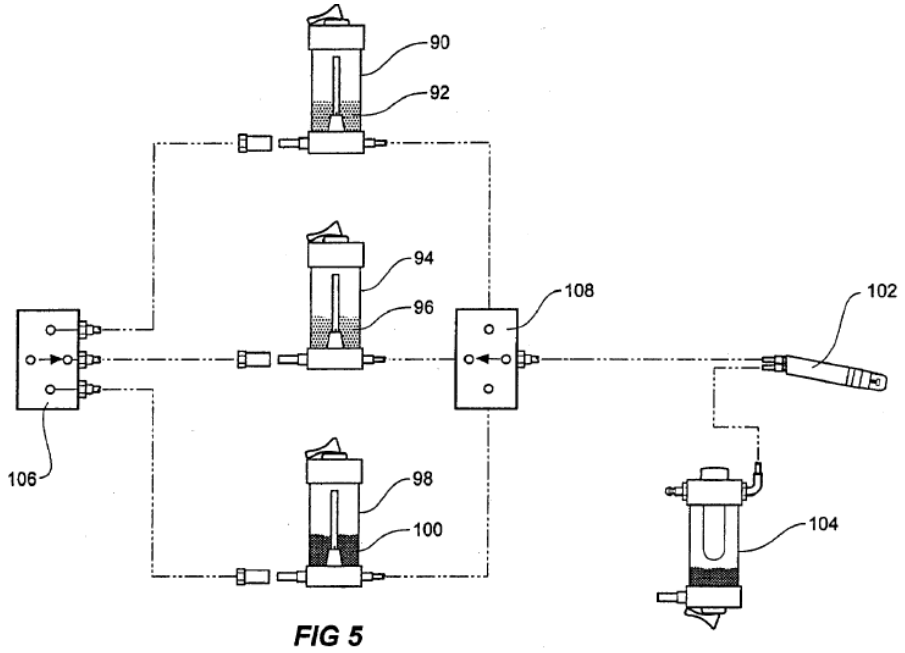

Figure 5 is a schematic representation of three supply containers (90, 94, 98) having different particles but only one recovery container (104). Ex. 1006 ¶¶ 46, 77.

Greenberg was published on May 15, 2003, and Petitioner contends that it qualifies as prior art under 35 U.S.C. § 102(b). Ex. 1006, code (43); Pet. 2.

2. Petitioner's Position

Petitioner alleges that Greenberg renders the challenged claims obvious based on a combination of Figures 1 and 5 of Greenberg. Pet. 56–60.

Petitioner provides annotated Figure 1 from Greenberg below:

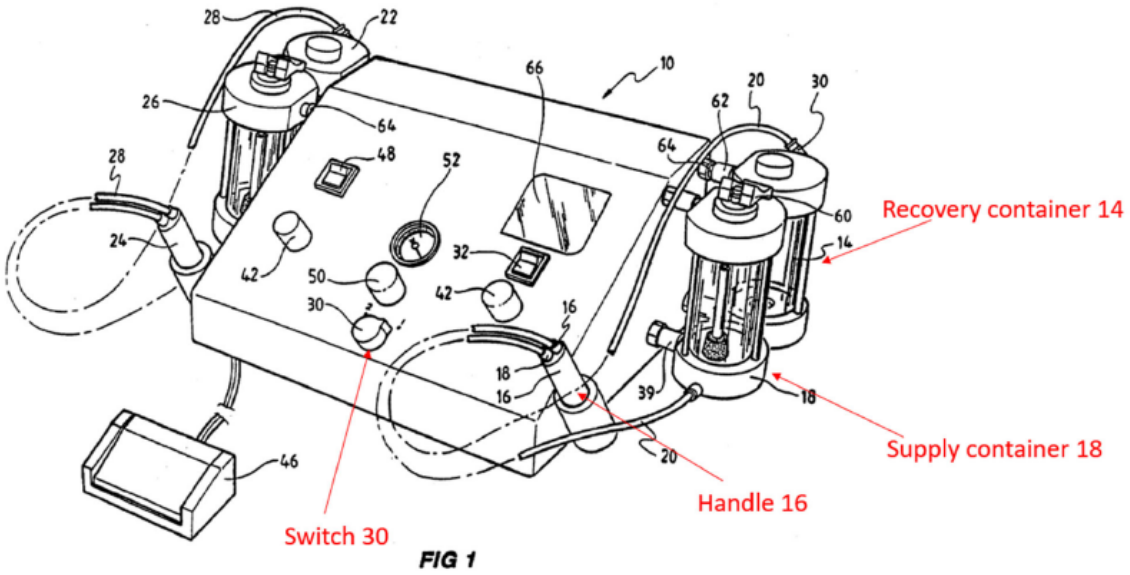

Pet. 56. Annotated Figure 1 from Greenberg shows Greenberg's system labeled to show the switch 30, handle 16, supply container 18, and recovery container 14. *Id.* at 57. According to Petitioner, "Greenberg's system allows 'a choice of different particles to use in a micro-dermabrasion machine,' 'with a plurality of supply containers housing different particles.'" *Id.* (citing Ex. 1006 ¶¶ 73–77; Ex. 1003 ¶ 67). In support of this argument, Petitioner points to annotated Figure 5 of Greenberg (shown below):

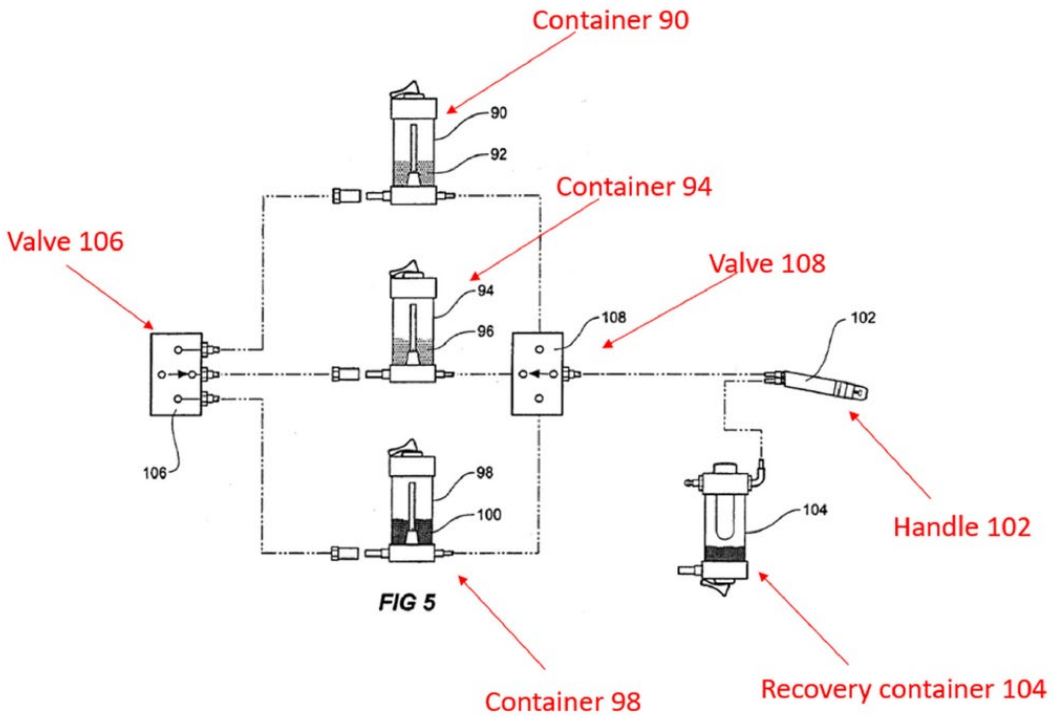

Id. at 58. Petitioner's annotated Figure 5 above shows three supply containers (e.g., containers 90, 94, and 98), and valves 106 and 108 that control which container is connected to handpiece 102 and recovery container 104. *Id.* at 57 (citing Ex. 1006 ¶ 77; Ex. 1003 ¶ 67).

According to Petitioner and its Declarant, Mr. Simon, Greenberg's Figure 5 would have been easily incorporated into the apparatus of Greenberg's Figure 1 as shown in the annotated Figure 1 below. Pet. 58 (citing Ex. 1003 ¶ 68; Ex. 1006 ¶ 77).

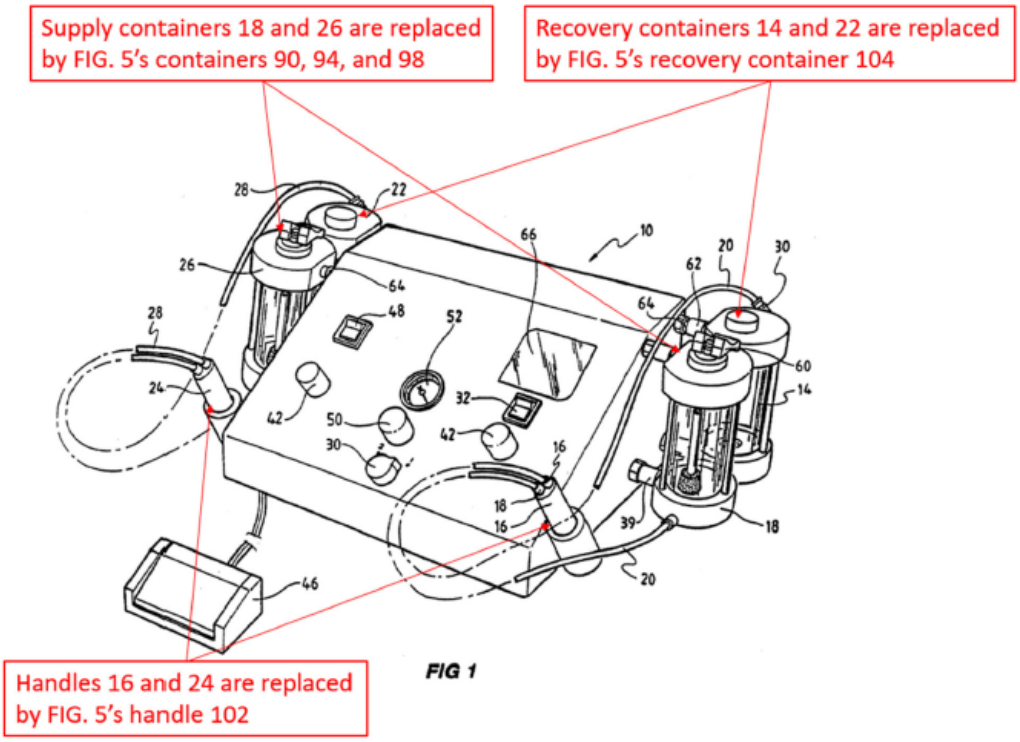

Id. at 59. In annotated Figure 1 above, "(1) FIG. 5's containers 90, 94, 98 and valves 106, 108 would be used instead of FIG. 1's supply containers 18 and 26; (2) FIG. 5's recovery container 104 would be used for FIG. 1's recovery containers 14 and 22, and (3) FIG. 5's single handle 102 would replace FIG. 1's two handles 16 and 24." *Id.* at 58–59 (citing Ex. 1003 ¶ 68). Further, according to Petitioner, "to connect multiple containers 90, 94, 98 with single handle 102, FIG. 5's control valves (e.g., valves 106 and 108) are used to enable selective fluid communication with each of the containers." *Id.* at 59 (citing Ex. 1003 ¶ 68). Petitioner also contends that "other structures described with respect to FIGS. 1-4 would have been similarly applicable for the FIG. 5 implementation" and "[t]he same mechanism and operation described for FIG. 1 would have been used for FIG. 5's implementation." *Id.* at 59–60 (citing Ex. 1003 ¶ 68).

Petitioner also provides an analysis as to where the limitations of the challenged claims are disclosed or suggested by the disclosure of Greenberg. *See* Pet. 60–90.

3. Analysis

First, we note that several of the ’287 patent claims recite the limitation of “fluid” or “treatment fluid.” For example, claim 1 recites that a block in the console is “configured to selectively receive *fluid* from the first container” and “configured to selectively receive *fluid* from the at least one additional container” (limitation [1.3]). Ex. 1001, 21:31–36 (emphasis added). Claim 1 also recites that “the first container contains a first *treatment fluid*, and the at least one additional container contains an additional *treatment fluid*” (limitation [1.6]), and that “the system is configured to deliver the first *treatment fluid* contained in the first container and the additional *treatment fluid* contained in the at least one additional container” (limitation [1.8]) (emphasis added). *Id.* at 21:48–50, 21:54–57. The claims also recite the limitation of “fluid communication.” For example, claim 1 recites that the block in the console is “configured to selectively be in *fluid communicatio*n with the handpiece” (limitation [1.3]), and that “the handpiece is configured to be in *fluid communication* with the vacuum source” (limitation [1.5]). *Id.* at 21:37–38, 21:42–43 (emphasis added).

Petitioner does not provide a proposed claim construction for “fluid” or “treatment fluid”; however, in discussing these limitations, Petitioner contends that, “[t]o the extent that Greenberg does not expressly describe ‘fluid’ for its treatment solutions, a POSITA would have understood and found obvious that Greenberg’s ‘particles’ constitute ‘fluid’ within the meaning of the ’287 patent.” Pet. 69 (citing Ex. 1003 ¶¶ 321–323). In

support of this argument, Petitioner points to the following disclosure from the ’287 patent:

> As used herein, the term “treatment material” is a broad term and includes, but is not limited to, medicament, a substance tending to flow or conform to the outline of its container such as fluid, gas, liquid (e.g., serums, water, saline, etc.), gel, fluidized materials, additives, and/or **a plurality of fine solids**. The general term “fluid” is used throughout synonymously with the term “treatment material” and is to be given the same broad definition.

See id. (citing Ex. 1001, 5:47–54) (emphasis in Petition). According to Petitioner, Greenberg’s abrasive particles correspond to the “plurality of fine solids” referenced in the ’287 patent and Greenberg’s system “us[es] an air flow to carry particles through a hand tool.” *Id.* (citing Ex. 1001, 5:47–52; Ex. 1003 ¶ 321; Ex. 1006 ¶¶ 40, 17) (alteration in original). Petitioner concludes that “[a] POSITA would have understood that the air flow carrying particles is considered to be ‘fluid’ as used in the ’287 patent.” *Id.* (citing Ex. 1003 ¶¶ 322–323).

We invite the parties to further address this claim construction issue and will base any final claim constructions on a full trial record. Specifically, we invite the parties to discuss the proper claim construction for the terms “fluid,” “treatment fluid,” and “fluid communication” in the claims. We also invite the parties to address the proper construction for the term “treatment material” as recited in claims 11 and 22. The parties should address whether these terms, as properly construed, encompass the particles disclosed in Greenberg. Because this issue is best resolved on a complete trial record, we do not make any findings on the current record as to whether the particles of Greenberg teach or suggest the “fluid,” “treatment fluid,” “fluid communication,” and “treatment material” limitations in the ’287

patent claims. Pursuant to *SAS* and *PGS*, however, when instituting on the basis that Petitioner has demonstrated a reasonable likelihood with respect to at least one challenged claim, we must institute on all claims and all grounds challenged in the Petition. *See SAS*, 138 S. Ct. at 1359–60; *PGS*, 891 F.3d at 1360; 37 C.F.R. § 42.108(a).

G. Asserted Obviousness of Claims 1–10, 12, 17–20, 22–26, 28–36, and 40–44 over Greenberg and Trueba (Ground 2B)

Petitioner contends that claims 1–10, 12, 17–20, 22–26, 28–36, and 40–44 are rendered obvious over Greenberg and Trueba. Pet. 90–94.

1. Petitioner's Position

Petitioner contends that the combined teachings of Greenberg and Trueba render the claims obvious because one of ordinary skill in the art would have modified Greenberg's system based on Trueba's teachings of computer control and display. Pet. 90 (citing Ex. 1003 ¶¶ 443–451). According to Petitioner, "in the resulting system, Greenberg's valve 106 and/or valve 108 are further controlled by a computer (e.g., Trueba's controller 100), which is controlled by a[] user input (e.g., Trueba's touch screen 105), to control the flow of treatment solutions from containers (e.g., Greenberg's containers 90, 94, and 98), so that a user can use the user input device to select a flow of fluids from the containers." *Id.* (citing Ex. 1003 ¶ 443). The combined device would also include a display (e.g., Trueba's touch screen 105) that indicates which solution is being delivered. *Id.*

Petitioner further contends that a person of ordinary skill in the art would have been motivated to modify Greenberg's device by including Trueba's computer display for several benefits, such as added precision, automation, and clarity. Pet. 90 (citing Ex. 1003 ¶¶ 444–451). According to Petitioner, "the same reasons that would have motivated the Karasiuk-

Palmer-Trueba combination . . . would similarly apply for the Greenberg-Trueba combination." *Id.* at 90–91 (citing Pet. 51–53). With supporting testimony from Mr. Simon, Petitioner also contends that a person having ordinary skill in the art would have had a reasonable expectation of success in implementing the combined teachings of Greenberg and Trueba given the technical similarities between the references and that the combination would merely constitute the use of a known technique to improve similar devices in the same way. *Id.* at 91 (citing Ex. 1003 ¶¶ 445–451).

Petitioner also provides an analysis as to where the limitations of the challenged claims are disclosed or suggested by the combined disclosures of Greenberg and Trueba. *See* Pet. 91–94.

2. Analysis

As discussed above, because the proper claim construction of the limitations "fluid," "treatment fluid," "fluid communication," and "treatment material" is best resolved on a complete trial record, we do not make any findings on the current record as to whether the particles of Greenberg teach or suggest such limitations. Pursuant to *SAS* and *PGS*, however, when instituting on the basis that Petitioner has demonstrated a reasonable likelihood with respect to at least one challenged claim, we must institute on all claims and all grounds challenged in the Petition. *See SAS*, 138 S. Ct. at 1359–60; *PGS*, 891 F.3d at 1360; 37 C.F.R. § 42.108(a).

IV. MOTION FOR JOINDER

"If the Director institutes an inter partes review, the Director, in his or her discretion, may join as a party to that inter partes review any person who properly files a petition under section 311 that the Director . . . determines warrants the institution of an inter partes review under section 314." 35 U.S.C. § 315(c). As specified in § 315(c), an *inter partes* review must be

instituted in order to join a party to that review. Petitioner seeks to join the -01491 IPR, but an *inter partes* review was not instituted in that case. *See* IPR2024-01491, Paper 17 (discretionarily denying institution).[8] Petitioner cannot join an *inter partes* review for which trial has not been instituted. Accordingly, we *dismiss as moot* Petitioner's Motion for Joinder.[9]

V. CONCLUSION

For the forgoing reasons, Petitioner has demonstrated a reasonable likelihood that at least one challenged claim of the '287 patent would have been obvious over the prior art of record. Accordingly, we institute an *inter partes* review on claims 1–12, 14–20, 22–26, 28–37, and 39–45 for all grounds set forth in the Petition.

VI. ORDER

In consideration of the foregoing, it is hereby:

ORDERED that, pursuant to 35 U.S.C. § 314, an *inter partes* review is instituted on claims 1–12, 14–20, 22–26, 28–37, and 39–45 of U.S. Patent No. 11,865,287 B2 for all grounds set forth in the Petition;

FURTHER ORDERED that, pursuant to 35 U.S.C. § 314(c) and 37 C.F.R. § 42.4, *inter partes* review of the '287 patent shall commence on the entry date of this Order, and notice is hereby given of the institution of a trial; and

---

[8] Petitioner in the -01491 IPR filed a Request for Director Review of the Decision Denying Institution on May 12, 2025. IPR2024-01491, Paper 18.
[9] Petitioner's Motion for Joinder states, "to the extent that IPR2024-01491 terminates prior to the Board's decision on this Motion for Joinder, rendering this Motion moot, [Petitioner] respectfully requests that the Board evaluate its Petition on the merits." Motion for Joinder, 2.

FURTHER ORDERED that Petitioner's Motion for Joinder (Paper 3) is *dismissed as moot*.

FOR PETITIONER:

Scott McKeown
WOLF, GREENFIELD & SACKS, P.C.
smckeown-ptab@wolfgreenfield.com

Roberto Fernandez
FOLEY & LARDNER, LLP
rfernandez@foley.com

FOR PATENT OWNER:

Ali Razai
Benjamin Everton
Benjamin Anger
Alexander Stein
Jacob Peterson
MORGAN, LEWIS & BOCKIUS LLP
ali.razai@morganlewis.com
ben.everton@morganlewis.com
ben.anger@morganlewis.com
alexander.stein@morganlewis.com
jacob.peterson@morganlewis.com

Craig Summers
KNOBBE, MARTENS, OLSON & BEAR LLP
2css@knobbe.com