US009714714B2

(12) **United States Patent**
Daansen

(10) **Patent No.: US 9,714,714 B2**
(45) **Date of Patent: *Jul. 25, 2017**

(54) **NOZZLE TIP WITH SLIT VALVE FOR FLUID DISPENSER**

(71) Applicant: **Warren S. Daansen**, Summerland Key, FL (US)

(72) Inventor: **Warren S. Daansen**, Summerland Key, FL (US)

(*) Notice: Subject to any disclaimer, the term of this patent is extended or adjusted under 35 U.S.C. 154(b) by 0 days.

This patent is subject to a terminal disclaimer.

(21) Appl. No.: **14/987,941**

(22) Filed: **Jan. 5, 2016**

(65) **Prior Publication Data**

US 2016/0131267 A1 May 12, 2016

Related U.S. Application Data

(63) Continuation of application No. 14/527,263, filed on Oct. 29, 2014, now Pat. No. 9,254,498, which is a continuation of application No. 11/854,360, filed on Sep. 12, 2007, now Pat. No. 8,899,449, which is a

(Continued)

(51) **Int. Cl.**

A47K 5/12	(2006.01)
F16K 3/28	(2006.01)
B05B 11/00	(2006.01)
B65D 47/20	(2006.01)

(Continued)

(52) **U.S. Cl.**

CPC ***F16K 3/28*** (2013.01); ***B05B 11/007*** (2013.01); ***B05B 11/3042*** (2013.01); ***B65D 47/2031*** (2013.01); ***F16K 15/147*** (2013.01); ***F16K 47/08*** (2013.01); *A47K 5/12* (2013.01); *B05B 11/3032* (2013.01)

(58) **Field of Classification Search**

CPC A47K 5/12; A47K 5/1208; B05B 11/3028; B05B 11/3035; B05B 11/3032; B05B 11/007; B05B 11/3042; B65D 47/2031; F16K 3/28; F16K 15/147; F16K 47/08

See application file for complete search history.

(56) **References Cited**

U.S. PATENT DOCUMENTS

2,328,382 A * 8/1943 Langdon F16K 15/147 137/218
2,347,988 A * 5/1944 Burke F16K 15/147 137/217

(Continued)

Primary Examiner — Patrick M Buechner
(74) *Attorney, Agent, or Firm* — McLane Middleton, Professional Association

(57) **ABSTRACT**

An outlet valve assembly for a fluid dispenser of a type having a pump fluidically coupled to a fluid reservoir includes an outlet nipple having a proximal end configured to be fluidically coupled to the pump and a distal end opposite the proximal end. The outlet nipple defines a conduit extending in a flow direction and has an annular protrusion extending radially inwardly intermediate the proximal end and the distal end. An outlet nozzle is coaxially received within the distal end of the outlet nipple. A resiliently deformable valve member is received within the conduit. The valve member includes a valve head portion having one or more slits defining an orifice and a peripheral valve portion outward of the valve head portion. The peripheral valve portion is retained between the annular protrusion of the outlet nipple and an end edge surface of the outlet nozzle.

20 Claims, 13 Drawing Sheets

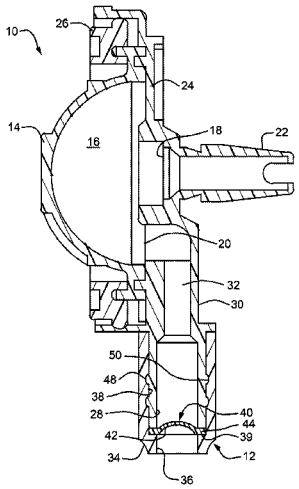

Related U.S. Application Data

continuation-in-part of application No. 11/220,018, filed on Sep. 6, 2005, now abandoned.

(60) Provisional application No. 60/608,239, filed on Sep. 9, 2004.

(51) **Int. Cl.**
F16K 15/14 (2006.01)
F16K 47/08 (2006.01)

(56) **References Cited**

U.S. PATENT DOCUMENTS

2,524,764 A * 10/1950 Burke F16K 15/147 137/217
2,598,002 A * 5/1952 Langdon F16K 15/147 137/218
2,642,259 A * 6/1953 Catlin F16K 15/147 137/515.7
2,662,724 A * 12/1953 Kravagna F16K 15/147 137/847
2,670,757 A * 3/1954 Delany F16K 15/147 137/515
3,118,468 A * 1/1964 Bochan F16K 15/147 137/846
3,160,329 A 12/1964 Radic et al.
3,220,611 A 11/1965 Zander et al.
3,485,419 A 12/1969 Taylor
3,504,699 A 4/1970 Grisé
4,143,853 A * 3/1979 Abramson A61M 39/26 137/515.7
4,155,487 A 5/1979 Blake
4,621,749 A * 11/1986 Kanfer A47K 5/1215 222/153.01
4,646,945 A 3/1987 Steiner et al.
4,991,745 A 2/1991 Brown
4,993,452 A * 2/1991 Hough F01N 3/025 137/515.7
5,071,017 A 12/1991 Stull
5,105,997 A 4/1992 Wakabayashi et al.
5,115,950 A 5/1992 Rohr
5,213,236 A 5/1993 Brown et al.
5,271,531 A 12/1993 Rohr et al.
5,339,995 A 8/1994 Brown et al.
5,377,877 A 1/1995 Brown et al.
5,409,144 A 4/1995 Brown
5,439,143 A 8/1995 Brown et al.
5,464,125 A 11/1995 Daansen
5,501,372 A * 3/1996 Daansen B67D 7/0205 222/181.3
5,531,363 A 7/1996 Gross et al.
5,626,262 A 5/1997 Fitten et al.
5,655,687 A 8/1997 Fitten et al.
5,676,289 A 10/1997 Gross et al.
5,680,969 A 10/1997 Gross
5,730,336 A 3/1998 Lerner
5,743,443 A 4/1998 Hins
5,788,108 A 8/1998 Rohr
5,839,614 A 11/1998 Brown
5,897,033 A 4/1999 Okawa et al.
5,904,275 A 5/1999 Suffa
5,911,344 A 6/1999 Kieras
5,927,567 A 7/1999 Fillmore
5,938,086 A 8/1999 Gross
6,006,960 A 12/1999 Gross
6,045,004 A 4/2000 Elliott
6,053,194 A 4/2000 Nelson et al.
6,062,435 A 5/2000 Hess, III
6,065,642 A 5/2000 Brown
6,089,411 A 7/2000 Baudin et al.
6,089,419 A 7/2000 Gross
6,095,381 A 8/2000 Schwanenberg
6,095,382 A 8/2000 Gross
6,112,952 A 9/2000 Hess, III et al.
6,142,343 A 11/2000 Wade et al.
6,152,330 A 11/2000 Polan
6,186,374 B1 2/2001 Gross
6,189,740 B1 2/2001 Wade et al.
6,199,725 B1 3/2001 Garibaldi
6,213,355 B1 4/2001 Schwanenberg
6,216,916 B1 4/2001 Maddox et al.
6,223,956 B1 5/2001 Albers
6,230,940 B1 5/2001 Manning et al.
6,273,296 B1 8/2001 Brown
6,273,305 B1 8/2001 Fioravanti et al.
6,279,783 B1 8/2001 Brown et al.
6,286,732 B1 9/2001 Daansen
6,293,437 B1 9/2001 Socier et al.
6,298,554 B1 10/2001 Fuchs
6,325,253 B1 12/2001 Robinson
6,394,315 B1 5/2002 Banks
6,394,316 B1 5/2002 Daansen
6,405,901 B1 6/2002 Schantz et al.
6,427,874 B2 8/2002 Brown et al.
6,446,844 B1 9/2002 Gross
6,530,504 B2 3/2003 Socier
6,543,652 B1 4/2003 Kelder et al.
6,612,468 B2 9/2003 Pritchett et al.
6,616,016 B2 9/2003 Hicks et al.
6,619,512 B1 * 9/2003 Sayers A47K 5/1207 222/181.3
6,672,479 B2 1/2004 Shiraishi et al.
6,705,492 B2 3/2004 Lowry
6,732,889 B2 5/2004 Oren et al.
6,749,092 B2 6/2004 Olechowski et al.
7,784,652 B2 8/2010 Gaus et al.
7,806,301 B1 10/2010 Ciavarella et al.
8,490,839 B2 7/2013 Mihashi et al.
8,899,449 B2 12/2014 Daansen
9,254,498 B2 * 2/2016 Daansen B05B 11/007
2002/0130139 A1 9/2002 Shiraishi et al.
2002/0158083 A1 10/2002 Brown et al.
2005/0087555 A1 4/2005 Hatton et al.
2006/0049208 A1 3/2006 Daansen
2007/0080177 A1 4/2007 Hatton et al.
2008/0035677 A1 2/2008 Daansen
2015/0048121 A1 2/2015 Daansen

* cited by examiner

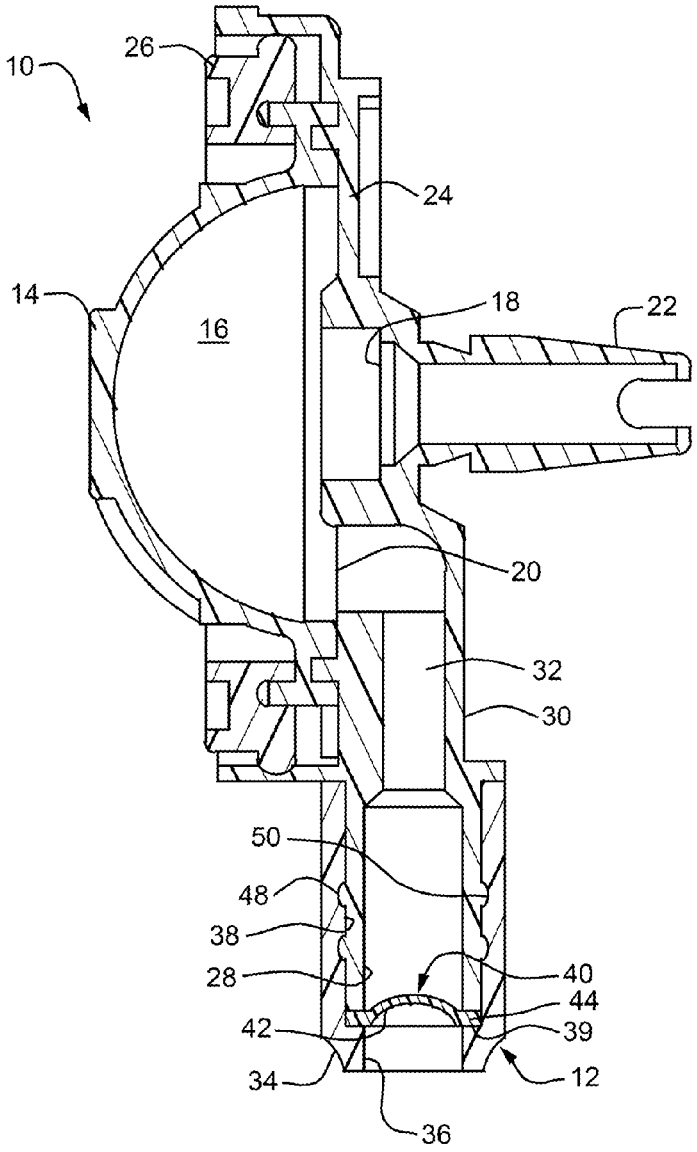
10
26
24
14
16
18
22
20
32
30
50
48
38
28
40
44
42
39
34
12
36

FIG. 1

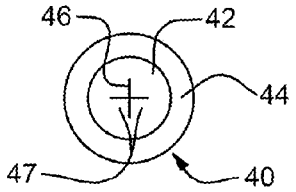
46
42
44
47
40

FIG. 2

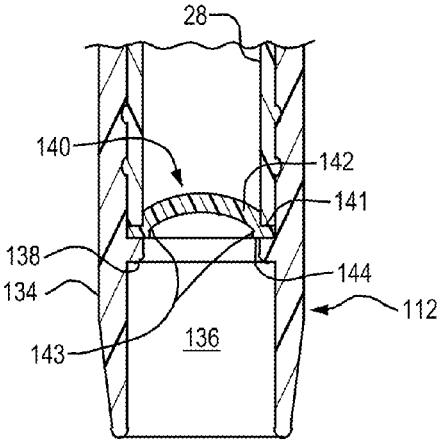

FIG. 3

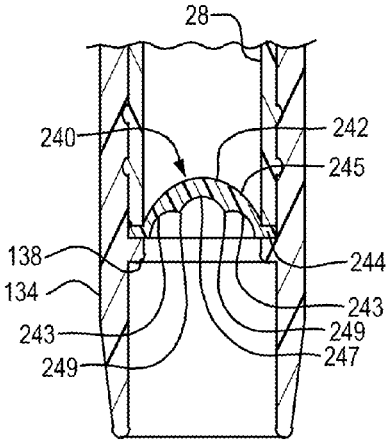

FIG. 4

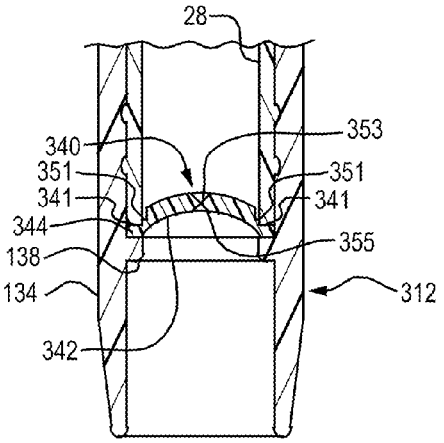

FIG. 5

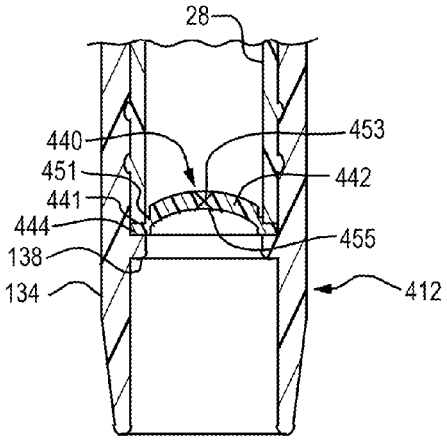

FIG. 6

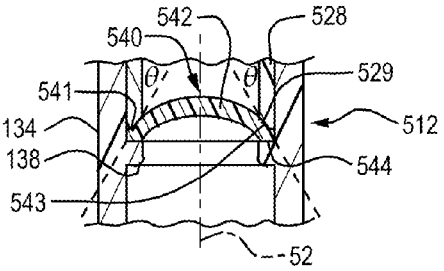

FIG. 7

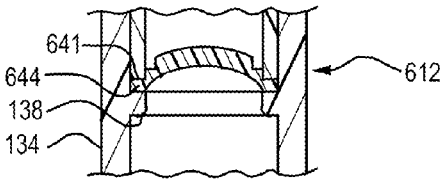

FIG. 8

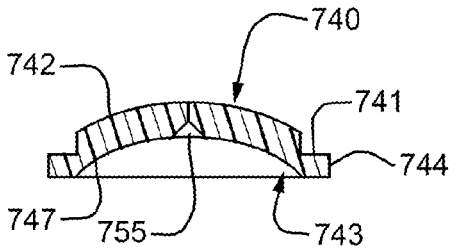

FIG. 9

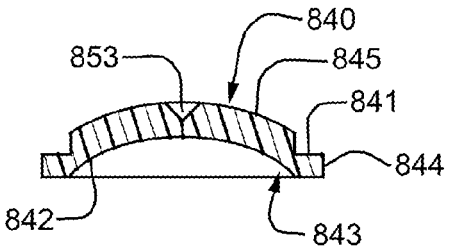

FIG. 10

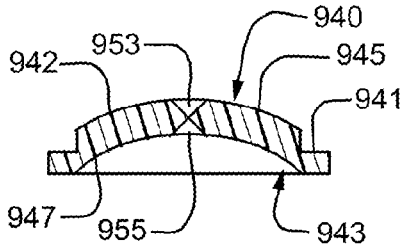

FIG. 11

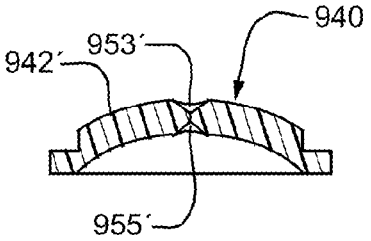

FIG. 12

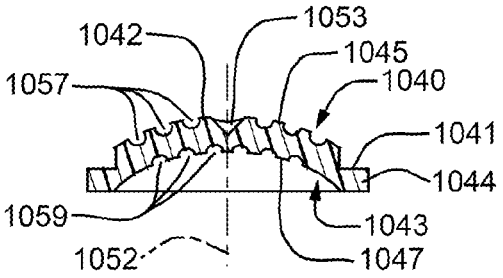

FIG. 13

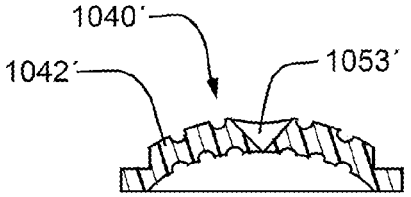

FIG. 14

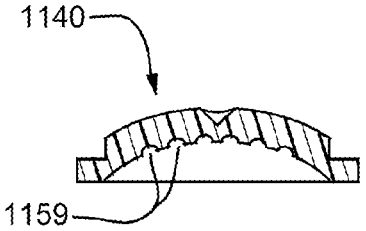

FIG. 15

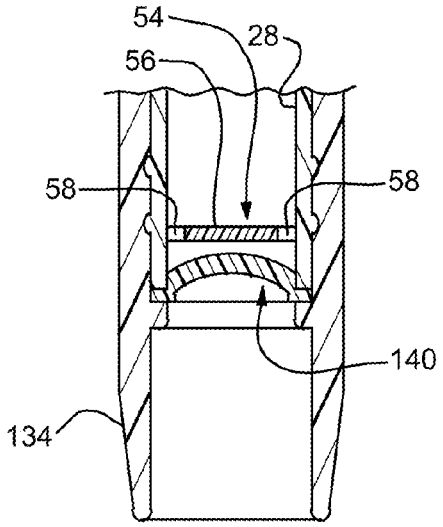

FIG. 16

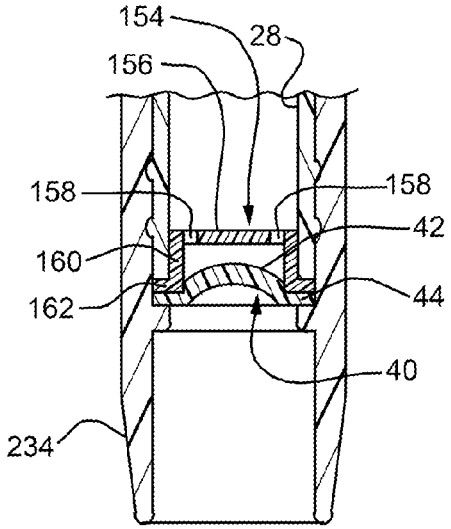

FIG. 17

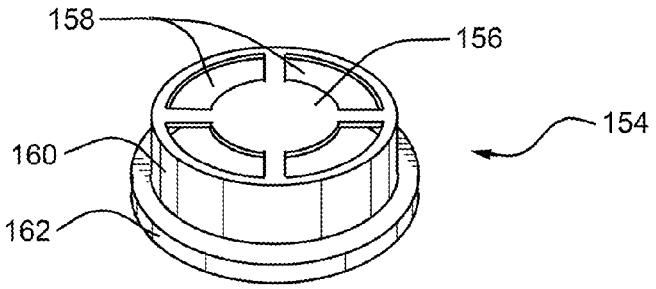

FIG. 18

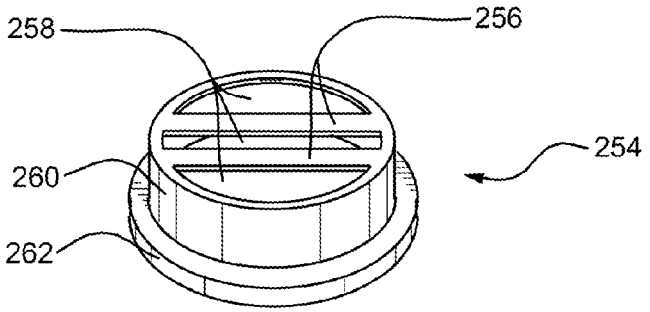

FIG. 19

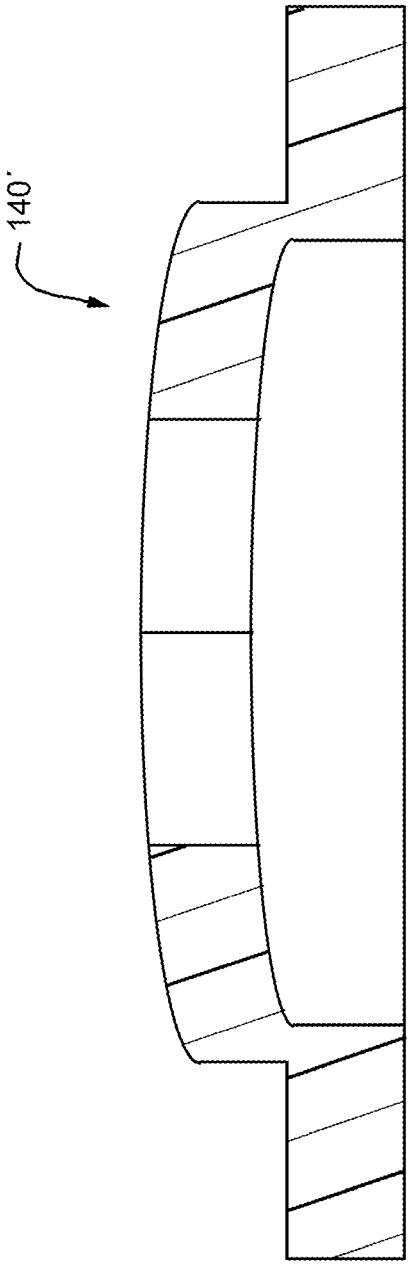

FIG. 20

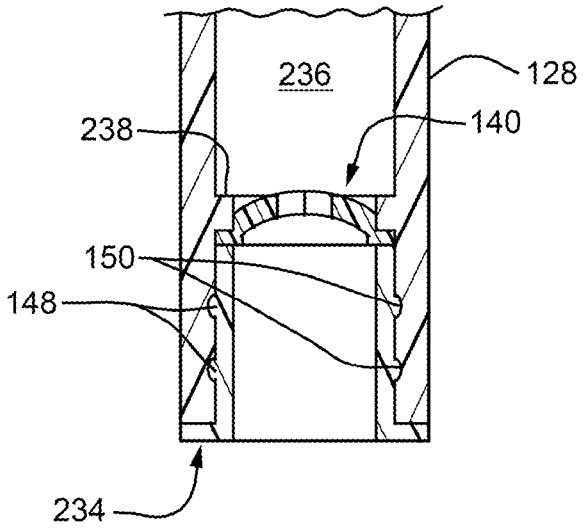

FIG. 21

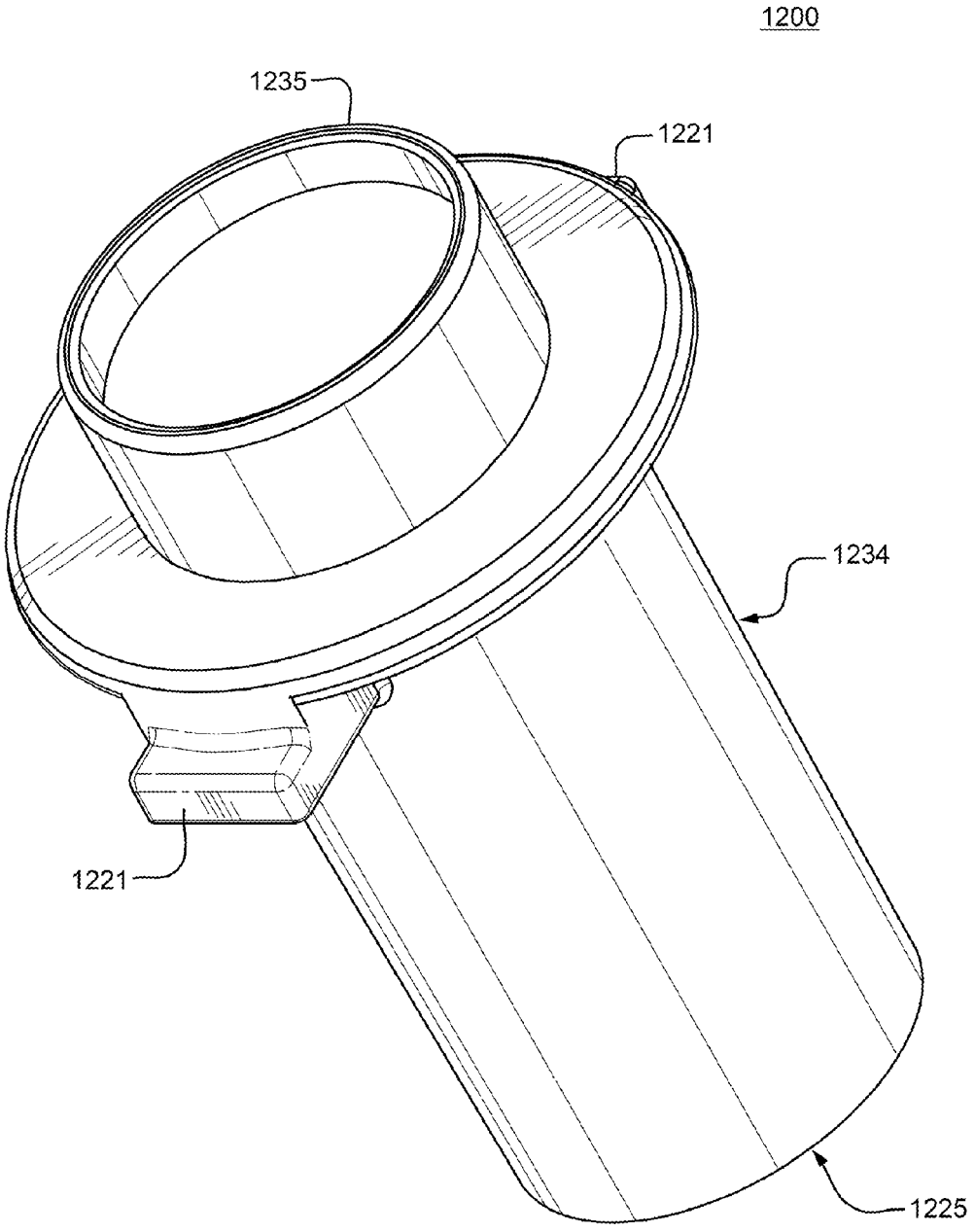

FIG. 22

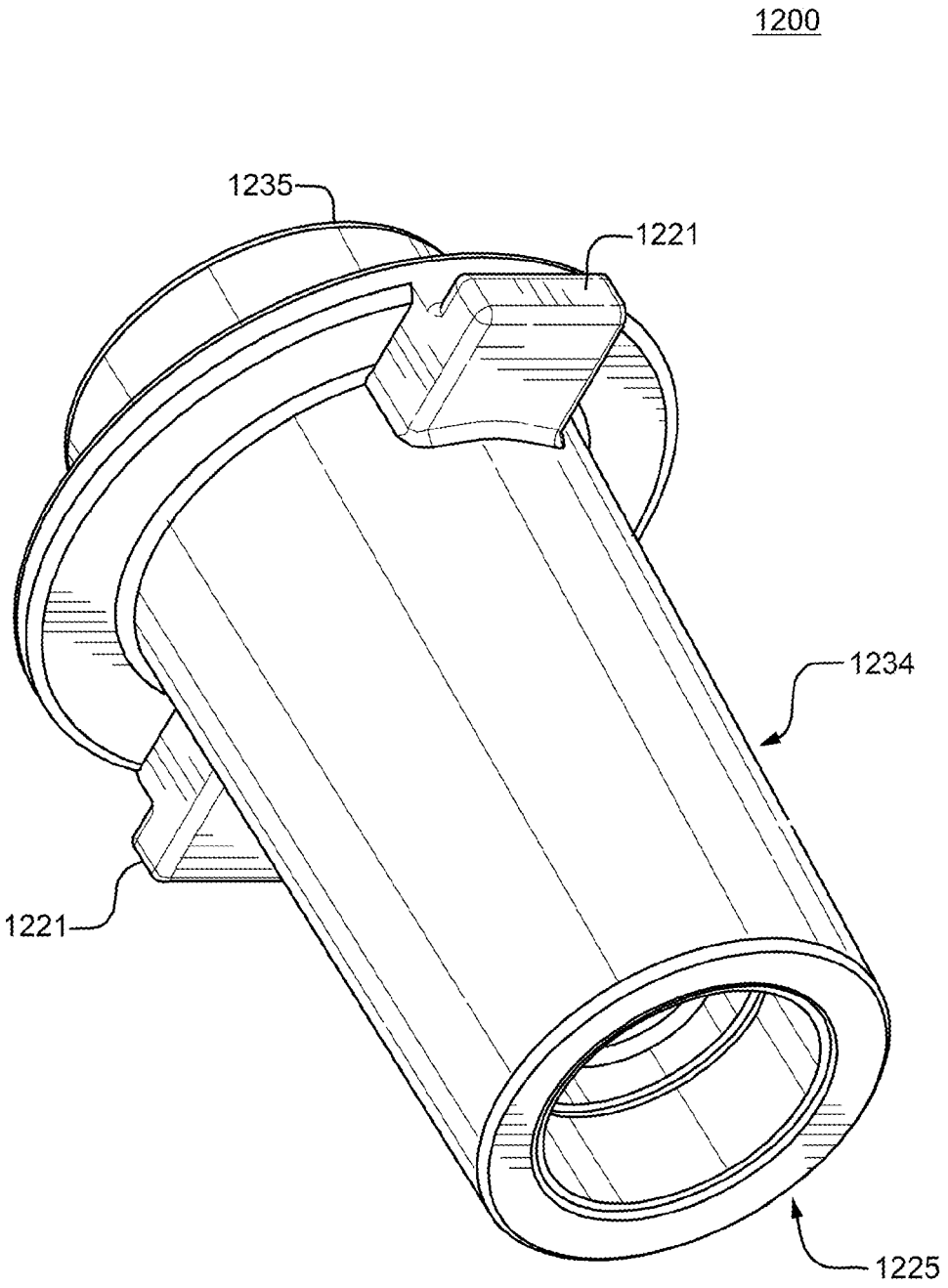

FIG. 23

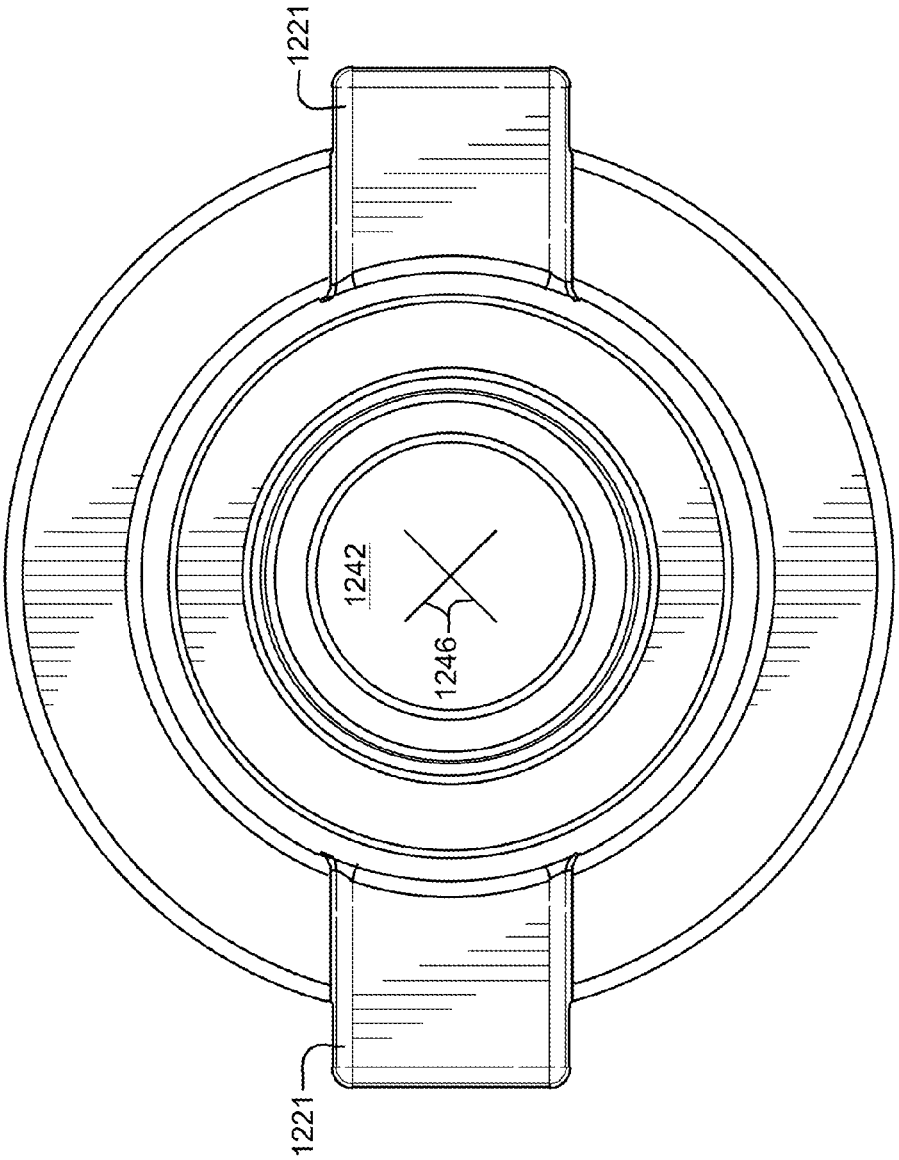

FIG. 24

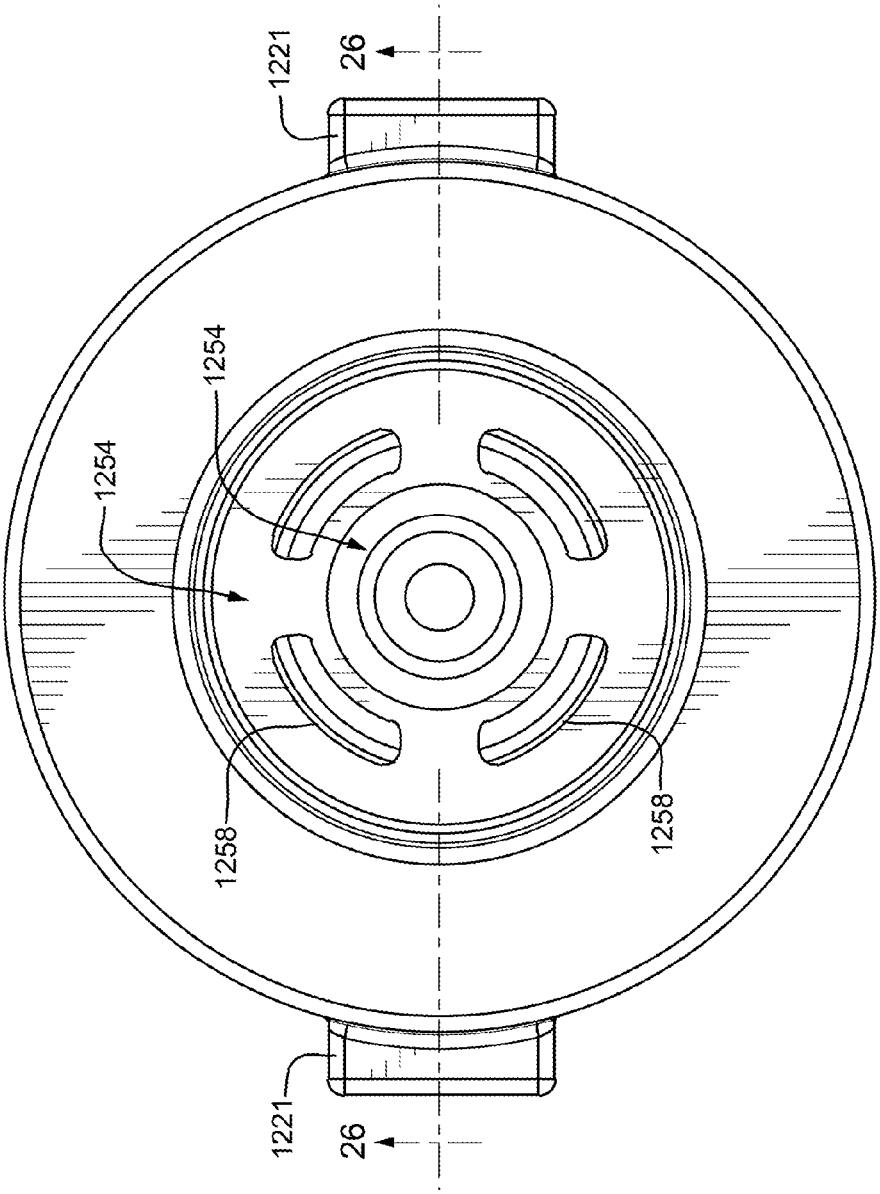

FIG. 25

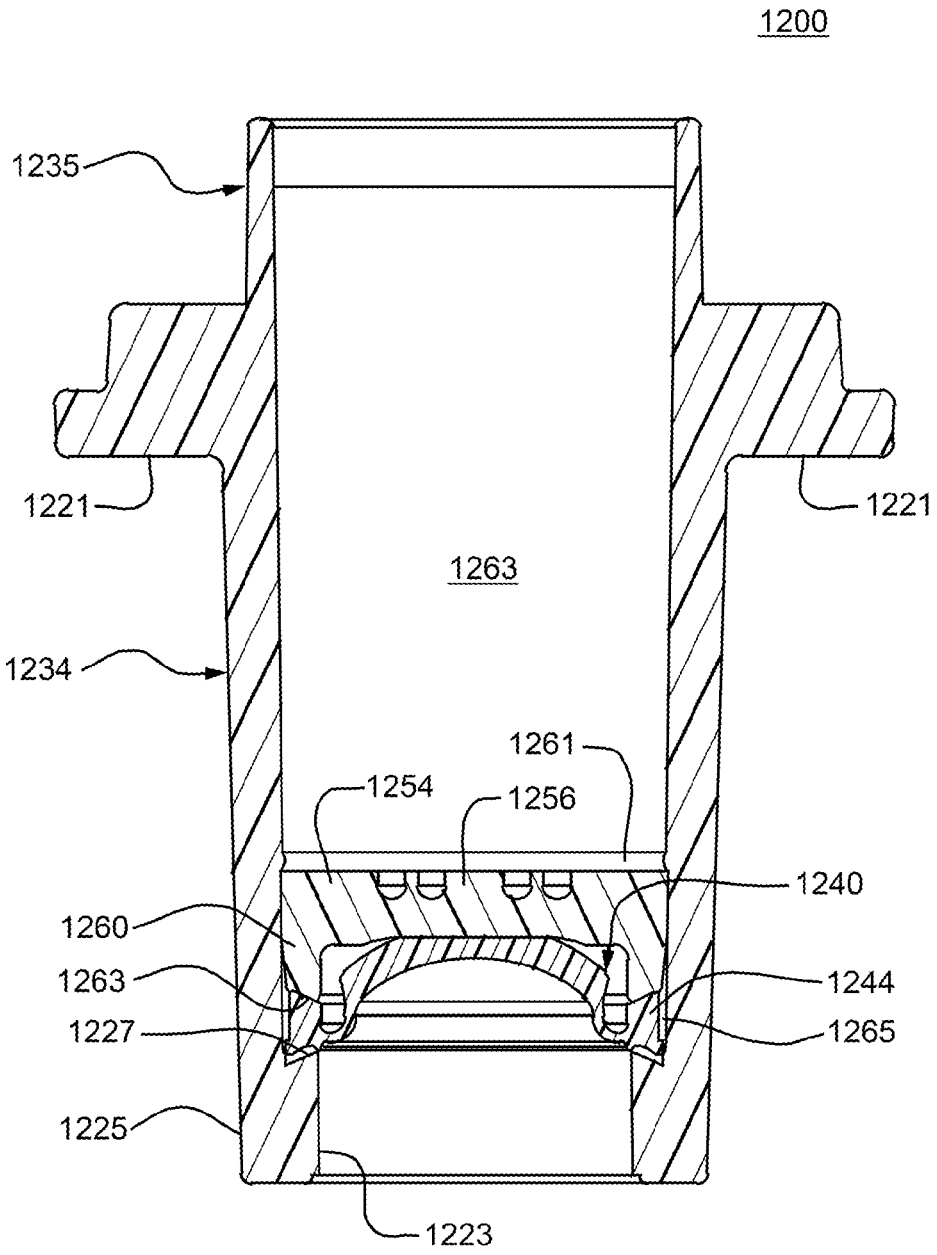
1200
1235
1221
1221
1263
1234
1261
1254
1256
1240
1260
1263
1244
1227
1265
1225
1223

FIG. 26

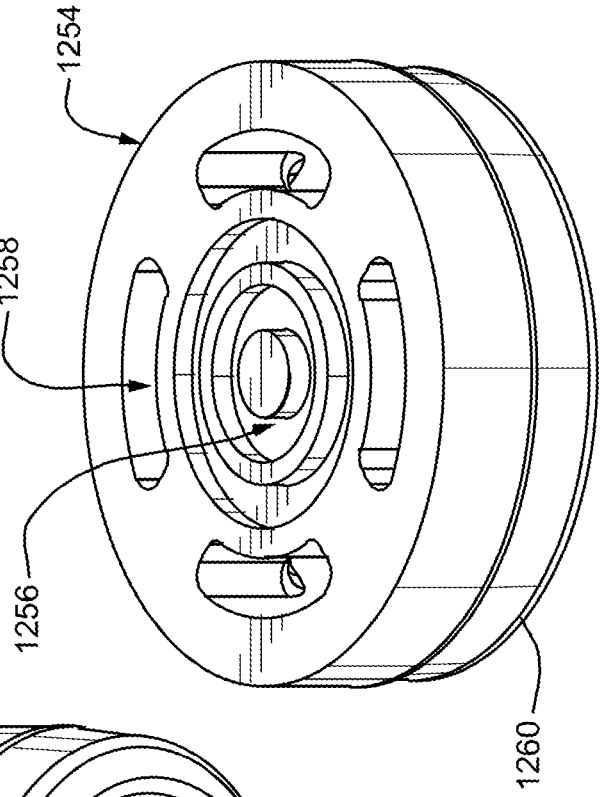

FIG. 28

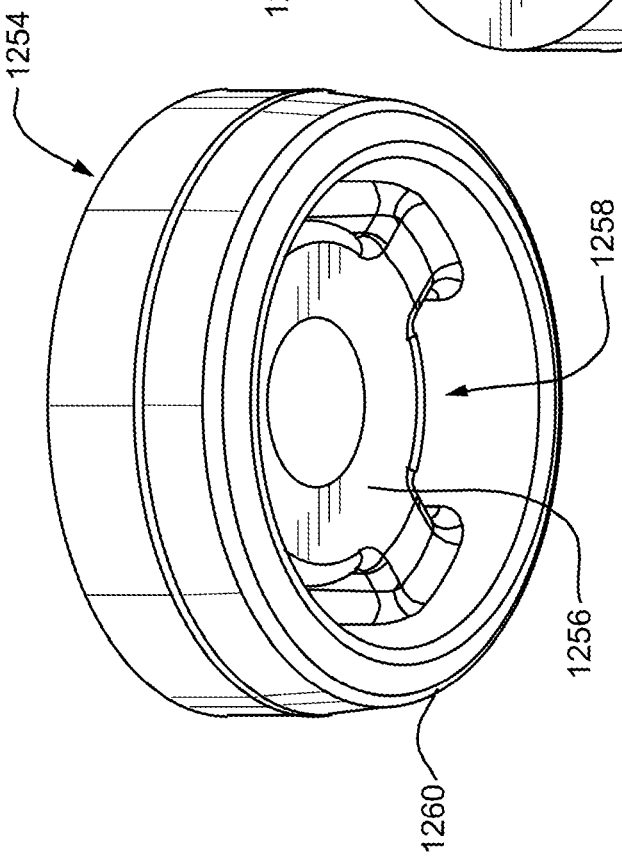

FIG. 27

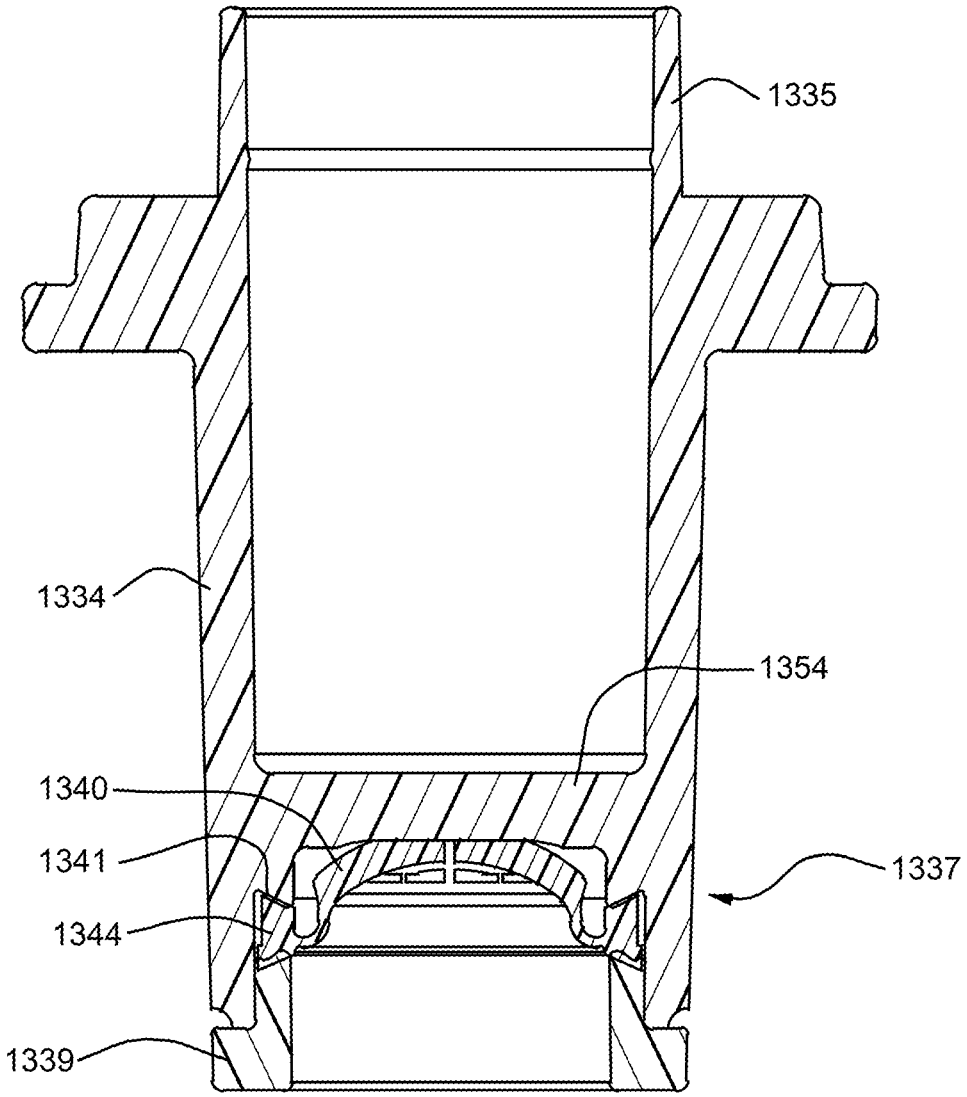

FIG. 29
(PRIOR ART)

NOZZLE TIP WITH SLIT VALVE FOR FLUID DISPENSER

CROSS-REFERENCE TO RELATED APPLICATIONS

This application is a continuation of application Ser. No. 14/527,263, filed Oct. 29, 2014, now pending, which is a continuation of application Ser. No. 11/854,360, filed Sep. 12, 2007, now U.S. Pat. No. 8,899,449, which is a continuation-in-part of U.S. patent application Ser. No. 11/220,018, filed Sep. 6, 2005, now abandoned, which, in turn, claimed priority under 35 U.S.C. §119(e) to U.S. provisional application Ser. No. 60/608,239, filed Sep. 9, 2004. Each of the aforementioned applications is incorporated herein by reference in its entirety.

BACKGROUND

The present disclosure relates to improved dispenser valves for a fluid dispenser and dispensing nozzle or pump tips employing the same. The valves and nozzle tip assembly in accordance with the present development may advantageously be employed in connection with a dispenser of a bag-in-a-box type and will be described herein primarily by way of reference thereto. However, it will be recognized that the valve and nozzle tip may also be used in connection with all manner of fluid types and fluid dispensers. In a preferred embodiment, the present disclosure relates to an improved liquid pump tip assembly for fluid dispenser and, specifically, to a tip assembly which utilizes an interiorly received resiliently flexible valve. In a further aspect, liquid dispensers incorporating the same are provided.

Liquid and semi-liquid dispensers are used in numerous applications and are used to dispense metered portions of soaps, creams, lotions, gels, and similar flowable materials. Such dispensers are commonly found in public restrooms, medical facilities, or the like and may be manually operated or may be powered units which may operate automatically, e.g., under preprogrammed control in response to sensory input.

Commonly, bag-in-box dispensing systems include a housing, such as a wall-mounted housing, and a disposable or reusable dispensing system. The disposable dispensing system includes a disposable pump assembly coupled to a flexible, collapsible bag or a semi rigid, unvented, bottle containing a supply of product to be dispensed. The reusable dispensing system includes a rigid or semi rigid refillable reservoir that is vented to the atmosphere and fitted with a pump as described herein. Although a wide variety of pump mechanisms have been developed, they generally include a resiliently flexible or deformable chamber having an inlet fluidically coupled to the bag or other container and a dispensing outlet having a spring loaded valve.

The spring loaded valve is normally closed and includes a spring and ball within the flow passageway, wherein the spring urges a ball into sealing engagement with the pump outlet. Commonly, the chamber is of a tube-type having a resiliently collapsible pump tube with its first end coupled to the bag or other container and the second end coupled to a pump tip for accurately dispensing a quantity of fluid, e.g., into the hand of a user.

In the tube-type pumps, the pump tip includes a ball and spring check valve in which a ball is seated against the inlet of the tip by a spring. In operation, the tube is compressed and the fluid moves the ball out of the seated position, compressing the spring, and thereby allowing the fluid to be

dispensed to flow around the ball and through the tip. A one-way valve may be provided at the first tube end to prevent soap in the tube from reentering the bag or other container when the tube is compressed. Such dispensers are described in the present applicant's prior U.S. Pat. Nos. 6,286,732, 5,598,952, 5,501,372, and 5,464,125, each of which is incorporated herein in its entirety.

Another type of pump is a so-called bubble, dome, or disc pump wherein the resiliently flexible chamber is hemispherical or dome shaped, and may be of the type described in my prior U.S. Pat. No. 6,394,316, which is incorporated herein by reference in its entirety.

In operation, a lever or other actuator on the housing is depressed to collapse the deformable chamber to increase the pressure in the chamber. The increased pressure in the chamber displaces the ball and liquid passes through the pump outlet, around the ball, and is expelled. When the actuator is released, the chamber returns from the collapsed state to its original volume, thereby decreasing the pressure within the chamber, thereby causing the ball to return to the seated position and to draw an additional charge of product from the bag or other container into the chamber.

A one-way check valve may also be provided at the dispensing pump inlet to permit flow from the bag into the collapsible chamber, but to prevent product in the chamber from flowing back into the bag or other container when the actuator is depressed. For example, a ball may be held in close proximity to the pump inlet via a perforated retainer. When the pressure in the chamber increases, the ball is seated against the pump inlet, thereby preventing flow of product from the chamber back into the bag. While the chamber returns to its original volume, the reduced pressure unseats the check ball and allows product to pass from the bag or other container, through the pump inlet and around the ball through the perforated ball retainer. In the disposable dispensing system, the bag or non-vented semi-rigid container collapses upon itself, thereby maintaining constant pressure within the bag. In the reusable dispensing system, the rigid or semi rigid container is vented to maintain balance between internal and atmospheric pressures and, as such, does not collapse during evacuation.

A common problem with the ball and spring dispenser valves is that they tend to clog and become unusable, particularly when liquid product containing particulate matter is used, or for highly viscous liquids.

In FIG. **29**, there is shown a known dispenser tip incorporating a resiliently flexible cross-slit valve **1340** instead of the conventional ball and spring check valve. The dispenser tip includes a body **1334**, a tube coupling **1335**, and an integrally formed, perforated internal baffle **1354**. The cross-slit valve **1340** is retained within an outlet end **1337** of the dispenser tip on the downstream side of the perforated baffle **1354**. An external retainer ring **1339** is secured to the outlet end **1337** to secure a peripheral portion **1344** of the valve **1340** within the tip outlet end **1337** between the ring **1339** and an interior shoulder **1341**. In one embodiment, a snap fit engagement of the retainer ring **1339** within the tip outlet end **1337** was found by the present applicant to exhibit unacceptable levels of stress cracks and splitting. In a further embodiment, the snap fit engagement between the retainer ring **1339** within the tip outlet end **1337** was replaced with an ultrasonic weld; however, this process adds expense and has shown other problems including excessive weld flash.

Accordingly, a need exists for an effective pump tip assembly incorporating a flexible, resilient valve with an

internally applied retainer ring that solves the above-referenced problems, is easy to manufacture, and lowers production cost.

SUMMARY

In one aspect, an improved outlet valve assembly for fluid dispenser of a type having a pump which has a pump inlet coupled to a fluid reservoir and a pump outlet is provided. The valve assembly includes a pump tip having a first end adapted to be coupled to the pump outlet and a second end defining a conduit extending in a flow direction therebetween. A first annular protrusion extends radially inwardly within the conduit and a resiliently deformable valve member is received within the conduit. The valve member includes a valve head portion having one or more slits defining an orifice and a peripheral valve portion bounding the valve head portion, which is retained on the first annular protrusion. A vent-resisting member is received within the conduit and includes a perforated baffle adjacent to the upstream side of the valve head portion and an axially-extending sidewall which has a distal edge engaging the peripheral valve portion.

In another aspect, an outlet valve assembly for a fluid dispenser of a type having a pump fluidically coupled to a fluid reservoir is provided. The outlet valve assembly includes an outlet nipple having a proximal end configured to be fluidically coupled to the pump and a distal end, the outlet nipple defining a conduit extending in a flow direction. An outlet nozzle comprises a sleeve and an annular protrusion extending radially inwardly, the sleeve and annular protrusion cooperating to define a counterbore. The counterbore coaxially receives at least a portion of the outlet nipple. A resiliently deformable valve member is received within the counterbore and includes a valve head portion having one or more slits defining an orifice and a peripheral valve portion around the valve head portion. The peripheral valve portion is retained between the annular protrusion of the outlet nozzle and the distal end of the outlet nipple. The valve head portion has a first side and a second side opposite the first side, the first side being upstream of the second side in the flow direction. A vent-resisting member is integrally formed within the conduit defined by the outlet nipple conduit, the vent-resisting member including a perforated baffle adjacent the first side of the valve head portion, wherein the baffle is positioned sufficiently close to the first side of the valve head portion so as to resist inward opening of the orifice during operation to prevent inward venting of ambient air during a dispensing operation.

In further aspects, fluid dispensers employing the outlet valve assemblies according to this disclosure are provided.

BRIEF DESCRIPTION OF THE DRAWINGS

The invention may take form in various components and arrangements of components, and in various steps and arrangements of steps. The drawings, wherein like reference numerals refer to like or analogous components throughout the several views, are only for purposes of illustrating preferred embodiments and are not to be construed as limiting the invention.

FIG. **1** side cross-sectional view of a dispensing pump for a fluid dispenser incorporating a nozzle outlet assembly according to an exemplary embodiment of the present invention.

FIG. **2** is a top plan view of the valve member shown in FIG. **1**.

FIGS. **3-6** are cross-sectional views of nozzle outlet assemblies according to further exemplary embodiments.

FIGS. **7** and **8** are fragmentary cross-sectional views of a nozzle outlet in accordance with still further exemplary embodiments of the present invention.

FIGS. **9-15** are cross-sectional views of some additional exemplary valves according to the present invention.

FIGS. **16** and **17** are cross-sectional views of exemplary embodiments employing a vent-resisting baffle.

FIG. **18** is an enlarged perspective view of the vent-resisting baffle shown in FIG. **17**.

FIG. **19** is a perspective view of an alternative baffle member embodiment.

FIG. **20** is an enlarged view of a cross-slit valve similar to the valve appearing in FIG. **3**.

FIG. **21** is a cross-sectional view of an alternative outlet nozzle assembly.

FIG. **22** is an isometric view, taken generally from above, of an exemplary embodiment nozzle tip having an internal vent-resisting member for retaining the valve within the nozzle tip.

FIG. **23** is an isometric view of the embodiment appearing in FIG. **22**, taken generally from below.

FIGS. **24** and **25** are bottom and top views, respectively, of the embodiment appearing in FIG. **22**.

FIG. **26** is a side cross-sectional view taken along the lines **26-26** appearing in FIG. **25**.

FIGS. **27** and **28** are isometric views, taken generally from below and above, respectively, of the retaining member.

FIG. **29** illustrates a prior art nozzle tip having an external retainer ring.

DETAILED DESCRIPTION OF THE PREFERRED EMBODIMENTS

Referring now to FIG. **1**, there appears an exemplary embodiment of a pump assembly **10** incorporating an outlet valve assembly **12** according to the present invention. The pump assembly **10** includes a resiliently flexible dome or bubble **14** defining a reservoir or chamber **16** for holding a charge of product to be dispensed. Exemplary fluids to be dispensed include, without limitation, liquid soap, shampoo, body wash, hand cream solutions, lotions or lotion soaps, gels, shaving cream, hand sanitizers, or any other flowable liquid.

The chamber **16** includes an inlet **18** and an outlet **20**. The inlet **18** of the chamber **16** is fluidically coupled to a source of product, preferably a flexible bag (not shown) containing the product to be dispensed via an inlet nipple **22**. The preferred bag-in-box embodiment is a closed system and venting is unnecessary, since pressure in the bag is maintained as the bag collapses upon itself.

A one-way valve, such as a ball (not shown) held in close proximity to the inlet **18** via a perforated retainer (not shown) may be provided to prevent fluid from passing from the chamber **16** back into the inlet nozzle **18** during operation. The hemispherical bubble **14** is secured to a cavity back wall **24** via a retaining ring **26**. The chamber outlet **20** is fluidically coupled a pump outlet nipple **28** via a conduit **30** defining a flow passageway **32**.

An outlet valve assembly **12** includes an outlet nozzle **34** having an axial bore or channel **36** therein and a counterbore **38**, and which is coaxially aligned with the outlet nipple **28**. A slit valve **40** is seated in the counterbore **38**, which defines a sleeve portion for receiving the outlet nipple **28** and an internal stop or shoulder **39**. The valve **40** includes a cylin-

head or membrane portion **42** which is bounded by a peripheral sealing edge or flange **44**. The peripheral edge **44** is compressed between the end edge surface of the outlet nozzle **28** and the base of the counterbore portion **38** of the outlet nozzle **12** to provide a sealing engagement and prevent fluid from flowing around the valve member **40**. Although the valve assembly is shown in connection with a dome-type pump, it will be recognized that the nozzle assembly may be used other pump types, such as tube-type pumps and others.

As best seen in FIG. **2**, and with continued reference to FIG. **1**, the valve head portion **42** includes one or more slits **46** forming an orifice and defining flexible flaps **47**. The membrane **42** is formed of a resiliently flexible material, such as flexible plastic, rubber, elastomers, silicone rubber, and the like. Exemplary resilient or flexible materials which may be used in making the valve member include, for example, polyurethane, polyisoprene, polybutadiene, neoprene, butadiene-acrylonitrile copolymers, ethylene-butadiene block copolymers, ethylene-propylene based copolymers including ethylene propylene diene terpolymer (EPDM), natural rubber, polychloroprene rubber, polyisoprene-isobutylene copolymers, silicone rubber, styrene-acrylonitrile copolymers, styrene-butadiene copolymers, styrene-isoprene copolymers, styrene-maleic anhydride copolymers, fluoroelastomers, polyolefins, and so forth, as well as blends thereof. This list is intended to be illustrative rather than limiting. The resiliency of the valve head maintains the flaps **46** in the closed position, thereby preventing fluid flow therethrough until the fluid pressure reaches some threshold value, i.e., when the dispenser actuator is depressed, whereupon the flaps **46** separate and the product is expelled through the valve orifice **46**.

The outlet nipple **28** is coaxially or telescopically received within the counterbore **38** of the outlet nozzle **34**. The inner diameter of the counterbore region **38** and the outer diameter of the outlet nipple **28** are sized to provide a friction or interference fit therebetween. The outlet nipple **28** outer surface and the counterbore **38** inner surface may optionally include aligned and mating or complimentary surface features. For example, in the depicted embodiment, the outlet nipple **28** includes raised annular ribs or protrusions **48** which engage complimentary annular channels or depressions **50** formed in the counterbore region **38**. The complimentary surface features **48** and **50** provide a snap fit between the nozzle outlet **34** and the nipple outlet **28** and ensure sufficient compression of the peripheral edge **44** to prevent fluid from flowing therearound during operation. Alternatively, the respective positions of the complimentary protrusions and depressions could be reversed. Other methods for securing the pump outlet nipple **28** and the connector sleeve portion of the nozzle **34** include the use of an adhesive, cross-hatching, texturing, or other surface modification of the counterbore **38** inner surface and/or outlet **28** outer surface, providing complimentary helical threads for rotational engagement, and so forth.

The nozzle outlet **34** may additionally include one or more exterior surface features (not shown) such as projections, fins, particular geometric shape, etc., which provides a keying function to ensure proper installation of the pump within the dispenser and/or to enable the pump assembly **10** to be keyed to fit a specific dispenser pump of like or mating configuration. The use of a separately attachable nozzle outlet **34** allows a common pump assembly to be readily adapted to fit any desired key configuration by installing an appropriately keyed nozzle outlet.

Referring now to FIG. **3**, there is shown an alternative outlet nozzle assembly **112** including an outlet nozzle **134** defining an axial bore **136** and an annular protrusion **138** forming an internal stop member which extends radially into the bore **136**. The pump outlet nipple **28** is telescopically received within the axial bore **136** of the outlet nozzle **134**. The inner diameter of the nozzle **136** and the outer diameter of the outlet nipple **28** are sized to provide a friction or interference fit. A valve member **140** includes a valve head portion **142** and peripheral edge **144** as detailed above and the peripheral edge **144** is sealingly retained between the end of the outlet nipple **28** and the annular ring **138**. An enlarged view of an alternative valve **140'** similar to the valve **140** appears in FIG. **20**.

In the embodiment depicted in FIG. **3**, the outlet nipple **28** outer surface and the outlet nozzle **134** inner surface may include optional aligned and mating surface features, e.g., raised annular ribs or protrusions **48** which engage complimentary annular channels or depressions **50**, as described above.

The peripheral flange portion **144** of the valve member **140** as shown in FIG. **3** is defined on the inward facing surface thereof by an peripheral annular notch **141** formed on the inward facing surface of the valve member **140** which is adapted to receive the distal end of the outlet nipple **28**. This permits sealing engagement of the edge **144** without distortion of the valve head member. In the embodiment of FIG. **3**, the annular notch **141** also serves to define a region **143** of reduced cross-sectional thickness with increased flexibility and/or articulability, thereby reducing the pressure necessary to cause the valve **140** to open.

Referring now to FIG. **4**, there is shown a nozzle assembly **212** including a nozzle outlet **134** having an inwardly extending retaining ridge **138** and which telescopically engages a pump outlet nipple **28**. The nozzle assembly **212** additionally includes a valve **240**. The valve **240** according to a further embodiment of the present invention includes a peripheral flange portion **244** bounding a valve head portion **242**. The flange portion **244** is sealingly retained between the outlet nipple **28** and the ridge **138**. The valve head portion **242** includes an inward or upstream facing surface **245** and exterior or downstream facing surface **247** which is opposite the surface **245**. The inwardly facing surface **245** is convex and the exterior facing surface **247** is generally concave and cusped in cross-sectional shape. That is, the interior surface **247** cross-sectional shape is defined by a series of curves or arcs defining regions of reduced thickness **243** and cusps **249** defining regions of increased thickness. The regions of reduced thickness **243** increase the flexibility and/or articulability of the valve **240** and reduce the pressure necessary to cause the valve **240** to open.

Referring now to FIG. **5**, there appears a nozzle assembly **312** including a nozzle outlet **134** having an inwardly extending retaining ridge **138** and which telescopically engages a pump outlet nipple **28**. The nozzle assembly **312** additionally includes a valve **340**. The valve **340** according to yet a further embodiment of the present invention includes a peripheral flange portion **344** bounding a valve head portion **342**. The flange portion **344** is sealingly retained between the outlet nipple **28** and the ridge **138**. The valve **340** includes a peripheral annular notch **341** receiving the distal end of the pump outlet nipple **28**. A second annular notch or groove **351** is disposed on the valve head portion **342**, radially inward from the peripheral notch **341**. The notch **351** defines a region of reduced valve head thickness, thereby increasing the flexibility and/or articulability of the valve and reducing the pressure necessary to cause the valve

to open and fluid to be expelled. The valve head portion **342** also includes a first generally conical cavity **353** formed in the inward facing surface thereof and a second generally conical cavity **355** formed in the exterior facing surface of the valve head **342**. The conical cavities **353**, **355** are axially aligned with the slits forming the valve orifice, with the apexes thereof being aligned and facing, whereby the thickness of the displaceable flaps is tapered toward the center of the orifice. This reduced thickness at the orifice reduces the pressure necessary to cause the flaps to open and expel the fluid therethough. The conical cavities described by way of reference to FIG. **3** and elsewhere herein may be replaced with other geometric configurations, such as frustoconical, pyramidical, frustopyramidical, and so forth.

Referring now to FIG. **6**, there appears an outlet valve assembly **412** including a nozzle outlet **134** having an inwardly extending retaining ridge **138** and which telescopically engages a pump outlet nipple **28**. The nozzle assembly **412** additionally includes a valve **440**. The valve **440** according to still a further embodiment of the present invention includes a peripheral flange portion **444** bounding a valve head portion **442**. The flange portion **444** is sealingly retained between the outlet nipple **28** and the ridge **138**. The base surface **459** of the flange **444** engages the ridge **138** and extends beyond the ridge **138** in the radially inward direction. The valve **440** includes a peripheral annular notch **441** receiving the distal end of the pump outlet nipple **28**. A second annular notch or groove is disposed on the valve head portion **442** radially inward from the peripheral notch **441**. The notch **451** defines a region of reduced valve head thickness, thereby increasing the flexibility and/or articulability of the valve, thereby reducing the pressure necessary to cause the valve to open. The valve head portion **442** also includes a first generally conical cavity **453** formed in the inward facing surface thereof and a second generally conical cavity **455** formed in the exterior facing surface of the valve head **442**. The conical cavities **453**, **455** are axially aligned with the slits forming the valve orifice, with the apexes thereof being aligned and facing, whereby the thickness of the displaceable flaps is tapered toward the center of the orifice. This reduced thickness at the orifice reduces the pressure necessary to cause the flaps to open and expel the fluid therethough.

Referring now to FIG. **7**, there is shown a fragmentary view of an outlet nozzle assembly **512**, including a nozzle outlet **134** having an inwardly extending retaining ridge **138** and which telescopically engages a pump outlet nipple **528**. The nozzle assembly **512** additionally includes a valve **540**. The valve **540** according to another embodiment of the present invention includes a peripheral flange portion **544** bounding a valve head portion **542**. The flange portion **544** is sealingly retained between the outlet nipple **528** and the ridge **138**. The peripheral flange portion **544** is defined on the inward facing surface thereof by a peripheral annular notch **541** which is adapted to receive the distal end of the outlet nipple **528**. The outlet nipple **528** includes a distal end **529**, which is tapered or beveled on its radially inward edge. The angle, theta, of the bevel is preferably in the range of about 5-60 degrees, and preferably about 25-45 degrees, relative to the axial or flow direction **52**. The annular notch **541** also serves to define a region **543** of reduced cross-sectional thickness with increased flexibility and/or articulability, thereby reducing the pressure necessary to cause the valve **540** to open during operation.

Referring now to FIG. **8**, there is shown a fragmentary view of a nozzle assembly **612** including a nozzle outlet **134** having an inwardly extending retaining ridge **138** and which telescopically engages a pump outlet nipple **28**. The nozzle assembly **612** additionally includes a valve **640**. The valve **640** is substantially as shown and described above by way of reference to the valve **340** shown in FIG. **5**, except that the conical cavities in the valve head orifice region are omitted. A peripheral flange portion **644** bounds a valve head portion **642**. The flange portion **644** is sealingly retained between the outlet nipple **28** and the ridge **138**. The valve **640** includes a peripheral annular notch **641** receiving the distal end of the pump outlet nipple **28**. A second annular notch or groove **651** is disposed on the valve head radially inward from the peripheral notch **641**. The notch **651** defines a region of reduced valve head thickness, thereby increasing the flexibility and/or articulability of the valve and reducing the pressure necessary to cause the valve to open and fluid to be expelled.

Referring now to FIG. **9**, there is shown a valve member **740** according to another embodiment of the present invention. The valve **740** includes a peripheral flange portion **744** bounding a valve head portion **742**. The valve **740** includes a peripheral annular notch **741** for receiving the distal end of the pump outlet nipple **28** (see FIGS. **1-8**). The notch **741** further defines a region **743** of reduced valve head thickness, thereby increasing the flexibility and/or articulability of the valve, and thereby reducing the pressure necessary to cause the valve to open. The valve head portion **742** also includes a generally conical cavity **755** formed in an exterior facing surface **747** of the valve head **742**. The conical cavity **755** is axially aligned with the slits forming the valve orifice, with the apex in the depicted embodiment extending roughly one-half of the cross sectional thickness of the valve head portion **742**. In this manner, the thickness of the displaceable valve flaps is tapered toward the center of the orifice and reduces the pressure necessary to cause the flaps to open and expel the fluid therethough. The degree of taper and/or degree to which the conical cavity extends through the cross-sectional thickness of the valve head portion may be varied in accordance with the product to be dispensed.

Referring now to FIG. **10**, there is shown a valve member **840** according to still another embodiment of the present invention. The valve **840** includes a peripheral flange portion **844** bounding a valve head portion **842**. The valve **840** includes a peripheral annular notch **841** for receiving the distal end of the pump outlet nipple **28** (see FIGS. **1-8**). The notch **841** further defines a region **843** of reduced valve head thickness, thereby increasing the flexibility and/or articulability of the valve, and thereby reducing the pressure necessary to cause the valve to open. The valve head portion **842** also includes a generally conical cavity **853** formed in an interior-facing surface **845** of the valve head **842**. The conical cavity **853** is axially aligned with the slits forming the valve orifice, with the apex in the depicted embodiment extending roughly one-half of the cross sectional thickness of the valve head portion **842**. In this manner, the thickness of the displaceable valve flaps is tapered toward the center of the orifice and reduces the pressure necessary to cause the flaps to open and expel the fluid therethough. Again, the degree of taper and/or degree to which the conical cavity extends through the cross-sectional thickness of the valve head portion may be varied in accordance with the product to be dispensed.

Referring now to FIG. **11**, there is shown a valve **940** according to a further embodiment of the present invention including a peripheral flange portion **944** bounding a valve head portion **942**. The valve **940** includes a peripheral annular notch **941** for receiving the distal end of a pump outlet nipple **28** (see FIGS. **1-8**) and defining a region **943**

of reduced valve head thickness, thereby increasing the flexibility and/or articulability of the valve and reducing the pressure necessary to cause the valve to open. The valve head portion **942** also includes a first generally conical cavity **953** formed in the inward facing surface **945** thereof and a second generally conical cavity **955** formed in the exterior facing surface **947** thereof. The conical cavities **953**, **955** are axially aligned with the slits forming the valve orifice, with the apexes thereof being aligned and facing, whereby the thickness of the displaceable flaps is tapered toward the center of the orifice. This reduced thickness at the orifice reduces the pressure necessary to cause the flaps to open and expel the fluid therethough. FIG. **12** illustrates a valve **940'** essentially as described above by way of reference to the valve **940** in FIG. **11**, but wherein cavities **953'** and **955'** are of differing taper and extend to a lesser degree through the valve head **942'** in the axial direction.

Referring now to FIG. **13**, there appears an outlet valve **1040** according to another embodiment of the present invention having a peripheral flange portion **1044** bounding a valve head portion **1042**. The valve **440** includes a peripheral annular notch **1041** receiving the distal end of the pump outlet nipple **28** (see FIGS. **1-8**). A series of concentric annular notches or grooves **1057** are formed on the inward facing surface **1045** of the valve head **1042**. The annular channels **1057** are concentric with an axial centerline **1052** of the valve **1040**. Likewise, a series of annular notches or grooves **1059** concentric with the centerline **1052** are formed on the outward facing surface **1047** of the valve head **1042**. The notch **1051**, the channels **1057**, and the channels **1059** provide regions of reduced valve head thickness, thereby increasing the flexibility and/or articulability of the valve, thereby reducing the pressure necessary to cause the valve to open. The valve head portion **1042** also includes a first generally conical cavity **1053** formed in the interiorly facing surface **1045**. In the depicted embodiment, the generally conical cavity **1053** is axially aligned with the slits forming the valve orifice and extends through the majority of the valve head cross-sectional thickness. In this manner, the thickness of the displaceable flaps is tapered toward the center of the orifice to reduce the pressure necessary to cause the flaps to open. FIG. **14** illustrates a valve **1040'** essentially as described above by way of reference to the valve **1040** in FIG. **13**, but wherein cavity **1053'** is of differing taper and extends to a lesser degree through the valve head **1042'** in the axial direction.

In the embodiments depicted in FIGS. **13** and **14**, the concentric annular grooves are depicted on both the interior and exterior valve head surfaces. In further embodiments, the annular grooves may be present on either the exterior surface only. For example, in FIG. **15**, a valve head **1140** is shown having annular grooves **1159** formed on the exterior facing surface only. In a further embodiment (not shown), a like valve head is provided with annular grooves formed only on the interior facing surface. Although the depicted embodiments illustrate concentric channels having curved, e.g., semicircular cross-sectional shapes, it will be recognized that other cross-sectional shapes are contemplated, such as V-shaped, rectangular, or other geometric cross-sectional shape.

The valve members of the present invention are preferably sufficiently resistant to flow in the reverse direction so as to resist venting of ambient air into the pump when the reduced pressure is present in the chamber **16**, i.e., after product has been dispensed and the actuator has been released. Ambient air is potentially contaminated and, in some cases, may degrade the product to be dispensed. Referring now to FIG. **16**, an outlet valve assembly **134** includes a vent resistant member **54** located adjacent to an interior facing surface of a valve member **140**. The vent resistant member **54** includes a generally disc-shaped baffle **56** having radially spaced-apart perforations **58** at its periphery. During operation, product flows through the perforations **58** and through the valve orifice. After the product is expelled and reduced pressure is present in the chamber **16**, the baffle central portion **56** prevents opening of the valve flaps in the inward direction, thereby preventing ingress of ambient air through the valve member. The perforated baffle **54** may be integrally formed or comolded with the outlet nipple **28** or may be separately formed and secured in place via an adhesive or other fastening means.

Referring now to FIGS. **17** and **18**, an outlet valve assembly **234** incorporating an alternative vent-resistant member **154** is shown. The vent-resisting member **154** is located adjacent to an interior facing surface of a valve member **140** having a valve head portion **142** and peripheral sealing edge **144**. The vent resistant member **154** includes a generally disc-shaped baffle **156** having radially spaced-apart perforations **158** at its periphery, an axially extending annular sidewall **160**, and a peripheral flange **162**. The peripheral flange **160** is retained along with the valve sealing edge **144** between the distal end of the outlet nipple **28** and the annular protrusion **138**.

Referring now to FIG. **19**, there is shown an alternative vent-resisting member **254** including transversely extending bars or baffles **256** defining perforations **258**. The vent-resistant member **254** also includes an axially extending annular sidewall **260** and a peripheral retaining flange **262**. In operation, the baffles **256** are adjacent to the inward facing surface of the valve member to prevent the valve flaps from opening inwardly, thereby preventing venting of ambient air following a dispensing operation.

Referring now to FIG. **21**, there appears an alternative outlet nozzle assembly including a male outlet nozzle **234** received within a pump outlet nipple **128** defining an axial bore **236**. The pump outlet **128** includes an annular protrusion **238** forming an internal stop member which extends radially into the bore **236**. The pump outlet nipple **128** coaxially receives the outlet nozzle **234** within the axial bore **236** of the outlet nipple **128**. The inner diameter of the nipple **128** and the outer diameter of the outlet nozzle **234** are sized to provide a friction or interference fit. In the depicted embodiment, a valve member **140** is sealingly retained between the end edge surface of the outlet nozzle **234** and the annular ring **238**.

The outlet nozzle **234** and the pump outlet **128** may be secured via a friction fit or any of the methods described above. In the embodiment depicted in FIG. **21**, the outlet nozzle **234** outer surface and the outlet nipple **128** inner surface include optional aligned and mating surface features as detailed above, e.g., raised annular ribs or protrusions **148** formed on the nozzle **234** outer surface which engage complimentary annular channels or depressions **150** on the outlet nipple surface inner surface. Alternatively, the relative positions of the protrusions **148** and channels **150** may be reversed. It will be recognized that the embodiment of FIG. **21** may be adapted to employ other valve and/or internal stop configurations as described herein. Likewise, it will be recognized that the embodiment of FIG. **21** may be adapted to employ the vent-resistant members as detailed above, either by directly securing the same to the interior surface of the pump outlet or by providing a vent-resistant member having a retaining flange, e.g., as shown in FIGS. **18** and **19**.

wherein the retaining flange is retained between the valve peripheral sealing ring and the internal stop member **238**.

Referring now to FIGS. **22-28**, there is shown a pump tip for a fluid dispenser, indicated generally as **1200**. The pump tip **1200** is preferably of a type for use with a tube-type pump dispenser although it will be appreciated that the pump tip **1200** shown may also be adapted for use with other pump types, such as a dome pump of the type shown in FIG. **1**.

The pump tip **1200** includes a nozzle **1234**, and outwardly extending tabs **1221** adapted to interface with a pump dispenser housing. It will be recognized that alternate tabs or other surface features may be provided which mate with complimentary or keyed features on the dispenser housing to accept lateral insertion of the pump tip while supporting and retaining the pump tip **1200** from downward movement.

An upper or inlet end **1235** of the pump tip **1200** is provided for coaxial and fluidic coupling with a pump tube (not shown). A narrowed diameter region or inward flange **1223** at an outlet end **1225** of the pump tip **1200** defines a shoulder **1227**.

A resiliently flexible cross-slit valve **1240** includes a valve head or membrane portion **1242** having one or more slits **1246** and is bounded by a peripheral sealing edge or flange **1244**. The depicted valve **1240** may be of the type shown, for example, in U.S. Pat. Nos. 5,213,236, 5,339,995, 5,377,877, 5,409,144, 5,439,143, 5,839,614, 5,890,621, 5,927,566, 5,944,234, 5,971,232, 6,112,951, 6,112,952, and 6,112,806. Each of the aforementioned patent documents is incorporated herein by reference in its entirety. Such valves are available from Liquid Molding Systems, Inc., of Midland, Mich. Alternatively, any of the aforementioned valves shown and described above by way of reference to FIGS. **1-21** may be employed.

The valve **1240** is preferably seated near the outlet end of the nozzle **1234**. Shortening the distance between the valve and the nozzle outlet reduces the surface area of the nozzle inner surface that is downstream of the valve. This reduced surface area for material collection, in turn, reduces the likelihood of material buildup, "jamming," stalactite formation, dripping, or deflected shots.

The peripheral edge **1244** of the valve **1240** is retained on the shoulder **1227** by a vent-resistant member **1254** having a central, generally disc-shaped baffle **1256** and a plurality of openings **1258** therearound. An axially extending annular sidewall **1260** extends downward (in the orientation shown in FIG. **26**) therefrom. The peripheral valve edge **1244** is retained between the shoulder **1227** and the axially-extending sidewall **1260**. Alternative vent-resisting baffle configures are also contemplated and may be as shown in FIGS. **17-19**. In still further embodiments, a rigid retaining ring, e.g., wherein the central vent-resisting baffle portion **1256** is omitted.

In constructing the pump tip **1200**, the valve **1240** and vent-resistant member **1254** are inserted into the nozzle from the upper end **1235**. The vent-resisting member **1254** may be retained within the nozzle **1234** via a friction fit, or, more preferably via a snap fit engagement. In the depicted preferred embodiment, the member **1254** is urged past an annular rib **1261** which is formed on the interior surface **1263** of the nozzle **1234** and provides a snap fit retention of the member **1254**. In the depicted embodiment, the rib **1261** engages the upper edge of the vent-resisting baffle. Alternately, a snap fit engagement may be provided by means of a complimentary peripheral groove or depression adapted to receive the rib **1261**.

In the depicted preferred embodiment, as can be seen in FIG. **26**, the valve peripheral edge **1244** has a generally tapered or dovetailed cross-sectional shape and the shoulder **1227** and downward facing surface **1263** of the annular wall **1260** cooperate to define a complimentary annular recess or channel **1265** for secure retention of the valve peripheral edge **1244**. The rib **1261** may be positioned such that the vent-resistant member **1254** compresses the valve peripheral edge **1244** to provide a sealing engagement therebetween to prevent fluid from flowing around the valve member **1240**.

The annular sidewalls **1260** may be slightly inwardly tapered to facilitate axially sliding movement of the member **1254** past the rib **1261** and into the locked position to assemble the unit. The baffle **1256** is adjacent to the inward facing surface of the valve member **1240** to prevent the valve flaps from opening inwardly, thereby preventing venting of ambient air following a dispensing operation.

The invention has been described with reference to the preferred embodiments. Modifications and alterations will occur to others upon a reading and understanding of the preceding detailed description. It is intended that the invention be construed as including these and other modifications and alterations.

Having thus described the preferred embodiments, the invention is now claimed to be:

1. An outlet valve assembly for a fluid dispenser, the fluid dispenser having a pump fluidically coupled to a fluid reservoir, said outlet valve assembly comprising:

an outlet nipple having a proximal end configured to be fluidically coupled to the pump and a distal end opposite the proximal end, the outlet nipple defining a conduit extending in a flow direction and having an annular protrusion extending radially inwardly intermediate the proximal end and the distal end;

an outlet nozzle coaxially received within the distal end of the outlet nipple; and

a resiliently deformable valve member received within said conduit, said valve member including a valve head portion having one or more slits defining an orifice and a peripheral valve portion outward of said valve head portion, said peripheral valve portion retained between the annular protrusion of the outlet nipple and an end edge surface of the outlet nozzle.

2. The outlet valve assembly of claim **1**, further comprising:

said valve head portion having a first side and a second side opposite the first side, said first side being upstream of said second side in the flow direction; and

a vent-resisting member received within the conduit defined by the outlet nipple conduit, the vent-resisting member including a perforated baffle adjacent the first side of said valve head portion, wherein the baffle is positioned sufficiently close to the first side of said valve head portion so as to resist inward opening of said orifice during operation to prevent inward venting of ambient air during a dispensing operation.

3. The outlet valve assembly of claim **2**, wherein the first side of said valve head portion is spaced apart from said baffle.

4. The outlet valve assembly of claim **2**, wherein said vent-resisting member is integral with the outlet nipple.

5. The outlet valve assembly of claim **2**, wherein the vent resisting member includes an axially extending annular sidewall extending between the perforated baffle and a peripheral flange, and further wherein the peripheral flange is retained along with the peripheral valve portion between the annular protrusion of the outlet nipple and the end edge surface of the outlet nozzle.

6. The outlet valve assembly of claim 1, wherein the outlet nozzle is secured within the outlet nipple via a friction fit.

7. The outlet valve assembly of claim 1, further comprising one or both of:

one or more protrusions formed on an outward facing surface of the outlet nozzle engaging one or more complementary recesses formed on an inward facing surface of the outlet nipple; and

one or more protrusions formed on an inward facing surface of the outlet nipple engaging one or more complementary recesses formed on an outward facing surface of the outlet nozzle.

8. The outlet valve assembly of claim 1, wherein said first surface of said valve head portion is generally convex.

9. The outlet valve assembly of claim 1, wherein said valve member is formed of a material selected from silicone rubber, neoprene, chloroprene rubber, and ethylene propylene diene terpolymer (EPDM).

10. The outlet valve assembly of claim 1, wherein said peripheral valve portion has a generally dovetailed cross-sectional shape.

11. The outlet valve assembly of claim 1, wherein said valve peripheral portion is clamped between the annular protrusion of the outlet nipple and the end edge surface of the outlet nozzle to provide a sealing interference therebetween.

12. A fluid dispenser comprising a pump having a pump inlet fluidically coupled to a fluid reservoir and an outlet valve assembly, said outlet valve assembly comprising:

an outlet nipple having a proximal end configured to be fluidically coupled to the pump and a distal end opposite the proximal end, the outlet nipple defining a conduit extending in a flow direction and having an annular protrusion extending radially inwardly intermediate the proximal end and the distal end;

an outlet nozzle coaxially received within the distal end of the outlet nipple; and

a resiliently deformable valve member received within said conduit, said valve member including a valve head portion having one or more slits defining an orifice and a peripheral valve portion outward of said valve head portion, said peripheral valve portion retained between the annular protrusion of the outlet nipple and an end edge surface of the outlet nozzle.

13. The fluid dispenser of claim 12, wherein said fluid reservoir is selected from the group consisting of a flexible non-vented container, a semi-rigid non-vented container, a rigid vented container, and a semi-rigid vented container.

14. The fluid dispenser of claim 12, wherein said pump is selected from a tube pump and a dome pump.

15. The fluid dispenser of claim 12, further comprising:

a housing for receiving said pump and fluid reservoir; and

a pump actuator on said housing.

16. The fluid dispenser of claim 12, further comprising:

said valve head portion having a first side and a second side opposite the first side, said first side being upstream of said second side in the flow direction; and

a vent-resisting member received within the conduit defined by the outlet nipple conduit, the vent-resisting member including a perforated baffle adjacent the first side of said valve head portion, wherein the baffle is positioned sufficiently close to the first side of said valve head portion so as to resist inward opening of said orifice during operation to prevent inward venting of ambient air during a dispensing operation.

17. The fluid dispenser of claim 12, wherein the first side of said valve head portion is spaced apart from said baffle.

18. The fluid dispenser of claim 12, wherein said valve member is formed of a material selected from silicone rubber, neoprene, chloroprene rubber, and ethylene propylene diene terpolymer (EPDM).

19. The fluid dispenser of claim 12, wherein said valve peripheral portion is clamped between the annular protrusion of the outlet nipple and the end edge surface of the outlet nozzle to provide a sealing interference therebetween.

20. The fluid dispenser of claim 12, wherein the outlet nozzle is secured within the outlet nipple via any one or more of:

a friction fit;

one or more protrusions formed on an outward facing surface of the outlet nozzle engaging one or more complementary recesses formed on an inward facing surface of the outlet nipple; and

one or more protrusions formed on an inward facing surface of the outlet nipple engaging one or more complementary recesses formed on an outward facing surface of the outlet nozzle.

* * * * *