UNITED STATES DISTRICT COURT
FOR THE EASTERN DISTRICT OF TEXAS
MARSHALL DIVISION

CERENCE OPERATING CO., Plaintiff, v. SAMSUNG ELECTRONICS CO., LTD.; and SAMSUNG ELECTRONICS AMERICA, INC., Defendants.	Case No. 2:24-cv-00181-JRG-RSP **JURY TRIAL DEMANDED**

DEFENDANTS' INVALIDITY CONTENTIONS

Pursuant to the Local Patent Rules and the Court's Scheduling Order, Defendants Samsung Electronics Co., Ltd. and Samsung Electronics America, Inc. (collectively, "Samsung" or "Defendants") provide these Invalidity Contentions with respect to the Asserted Claims of U.S. Patent Nos. 8,682,671 ("'671 patent), 8,825,486 ("'486 patent"), 8,914,291 ("'291 patent"), and 7,680,334 ("'334 patent"), (collectively, the "Asserted Patents") identified by Cerence Operating Co., ("Cerence" or "Plaintiff") in its Infringement Contentions.[1]

The Asserted Claims, as reflected in Plaintiff's Infringement Contentions, are as follows:

U.S. Patent No.	Asserted Claims
8,682,671	1-3, 5-7, 15-17, 19-20
8,825,486	1-3, 5-7, 15-17, 19-20
8,914,291	1-2, 4, 6-7
7,680,334	1-2, 4, 8-10, 15-16, 19-20, 22, 26-28

[1] Plaintiff served infringement contentions on July 18, 2024. Plaintiff's infringement contentions are referred to as the "Infringement Contentions."

As detailed further below, the Asserted Claims of the Asserted Patents are anticipated by, or obvious in view of, one more of the prior art references produced at SAMSUNG_C2_0000036630-SAMSUNG_C2_0000045644. The Asserted Claims are invalid pursuant to pre-AIA 35 U.S.C. §§102 and/or 103, as well as invalid under 35 U.S.C. §§101 and/or 112.

I. PRELIMINARY STATEMENT

These Invalidity Contentions are based on Defendants' current knowledge and regarding the Asserted Patents and prior art, of Plaintiff's infringement theories (inasmuch as they can be inferred from its Infringement Contentions), and of the facts and other information available as of the date of these Invalidity Contentions. Defendants' investigation, discovery, and analysis of information related to this action is ongoing. Additional discovery, elucidation of Plaintiff's impermissibly vague Infringement Contentions, and/or orders of the Court may require Defendants to amend or supplement these Invalidity Contentions, and Defendants expressly reserve the right to do so as the case proceeds. These Invalidity Contentions represent Defendants' good-faith effort to provide a comprehensive identification of relevant prior art, but Defendants reserve the right to modify or supplement their prior art list and Invalidity Contentions at a later time with, or based on, pertinent information that may be later discovered.

A. No Waiver

Nothing in these Invalidity Contentions is intended, nor should be construed, as a waiver of any noninfringement position or argument under 35 U.S.C. §§101 and/or 112. Defendants' statements herein (including the accompanying claim charts) reflect Defendants' present understanding of the purported scope of the claims as alleged by Plaintiff in its Infringement Contentions (as best those contentions can be understood given their present deficiencies).

The patent claims have yet to be construed. As a result, Defendants have based these Invalidity Contentions upon their knowledge and understanding of the potential scope of the Asserted Claims at this time, and, in part, upon the apparent interpretations of the Asserted Claims advanced by Plaintiff in its Infringement Contentions. Defendants may disagree with Plaintiff's interpretation of the meaning of many terms and phrases in the Asserted Claims. Defendants have provided these Invalidity Contentions based in part on their present understanding of Plaintiff's apparent constructions and interpretations of the Asserted Claims. These Invalidity Contentions do not represent Defendants' agreement or view on the proper interpretation of any claim term. Any similarity between any apparent claim interpretation in any of Defendants' charts of prior art reference(s) and Plaintiff's Infringement Contentions is not an admission or agreement with Plaintiff about the meaning of any claim term, but a reflection of the fact that the subject matter Plaintiff believes is claimed is present in the prior art, or that the claims are otherwise invalid. These Invalidity Contentions are made in the alternative, and should not be interpreted to rely on, or in any way affect, the non-infringement arguments Defendants may assert in this case. Defendants reserve the right to amend, supplement, or materially modify their Invalidity Contentions as the case proceeds. Defendants also reserve the right to amend, supplement, or materially modify their Invalidity Contentions based on any infringement and/or additional claim construction positions that Plaintiff may take in this case.

Defendants also reserve the right to amend, supplement, or materially modify their Invalidity Contentions in response to any claim construction or interpretation positions that Plaintiff may take. Defendants also reserve the right to assert that a claim is indefinite, not enabled, fails to claim what the applicants' regarded as their invention, or fails to meet the written description requirement of 35 U.S.C. §112 based on any claim construction or interpretation

Cerence Operating Company, Ex. 2004
Samsung Electronics Co., Ltd., etc. v. Cerence Operating Company, IPR2025-00459
Page 3 of 45

position Plaintiff may take in this case or based on any claim construction the Court may further adopt in this case.

B. No Admission

Nothing disclosed herein is an admission or acknowledgement that any product accused of infringement by Plaintiff in its Infringement Contentions ("Accused Products"), or any of Defendants' other products or services, infringes any of the Asserted Claims.

Defendants also note that Plaintiff appears to rely on overly broad interpretations of the Asserted Claims. At the same time, Plaintiff's Infringement Contentions are in most places too general and vague to discern Plaintiff's infringement theories and how exactly Plaintiff contends each Accused Product meets or practices each element of the Asserted Claims. For example, as explained in Defendants' letter dated September 6, 2024, Plaintiff's Infringement Contentions failed to clearly identify the aspects or features of the Accused Products that Plaintiff contends meet the elements of the Asserted Claims. As a result, Defendants have been prejudiced in their ability to prepare these Invalidity Contentions. In addition, Plaintiff's Infringement Contentions, in many cases, continue to fail to put Defendants on notice of Plaintiff's interpretation of the Asserted Claims, further prejudicing Defendants' ability to identify relevant prior art. To the extent that Plaintiff is later permitted by the Court to amend its Infringement Contentions to cure the deficiencies of its current contentions or to pursue any currently undisclosed doctrine of equivalents theories, Defendants expressly reserve the right to supplement or amend these Invalidity Contentions to account for such amendments.

If any of the prior art references disclose the same functionality or feature of any of the Accused Products, Defendants reserve the right to argue that said feature or functionality does not practice any element of any of the Asserted Claims, and to argue, in the alternative, that if said feature or functionality is found to practice any element of any of the Asserted Claims, then the

Cerence Operating Company, Ex. 2004
Samsung Electronics Co., Ltd., etc. v. Cerence Operating Company, IPR2025-00459
Page 4 of 45

prior art reference demonstrates that the element is not novel, is obvious, and/or is otherwise not patentable.

Attached hereto are representative claim charts that identify where the elements of the Asserted Claims of the Asserted Patents may be found in the prior art and further identifying why those elements are not novel or non-obvious. The references cited in the attached claim charts may disclose the limitations of the Asserted Claims expressly and/or inherently. The suggested obviousness combinations may be presented in conjunction with or in the alternative to Defendants' contentions regarding anticipation. These obviousness combinations should not be construed to suggest that any reference included in any combination is not anticipatory in its own right. Further, to the extent that Plaintiff contends that any of the references identified do not constitute prior art under pre-AIA 35 U.S.C. §102, Defendants reserve the right to rely upon other prior art references in the same patent family with substantially identical disclosures as evidence of invalidity based on the same theories as those disclosed below.

C. Reservation of Rights

Prior art not currently included in this disclosure may become relevant. Defendants are currently unaware of the extent, if any, to which Plaintiff will contend that limitations of the Asserted Claims are not disclosed in the prior art identified by Defendants. Defendants reserve the right to identify other references that would have made the addition of the allegedly missing limitation to the disclosed device or method obvious or show that the allegedly missing limitation would have been known or readily apparent to one of ordinary skill in the art at the time of the invention in light of the disclosure of the prior art at issue. Defendants also reserve the right to rely on any of the references produced at SAMSUNG_C2_0000036630-SAMSUNG_C2_0000045644 to demonstrate the state of art at the alleged times of invention and as evidence of the knowledge

of one of ordinary skill in the art[2] in support of any motivations to modify or combine the charted prior art references with other references or knowledge.

Plaintiff may also be aware of additional prior art that is not known to Defendants. If Plaintiff produces additional prior art responsive to Defendants' discovery requests after these contentions are served, Defendants may supplement their Invalidity Contentions with prior art contained in such production once they have had a fair opportunity to review, analyze, and chart such prior art. Defendants reserve the right to amend their Invalidity Contentions with any additional potential prior art known by Plaintiff but not yet disclosed to Defendants.

Defendants provide these Invalidity Contentions only for the claims that Plaintiff has asserted, but reserve the right to seek invalidation of all claims in the Asserted Patents.

D. Ongoing Investigation

Defendants' investigation is ongoing, and Defendants expressly reserve the right to amend their Invalidity Contentions and document production to account for evidence uncovered as their investigation continues. Such amendments include identifying and relying on additional references that may result from Defendants' further search and analysis. Defendants reserve the right to supplement these Invalidity Contentions in light of any additional prior art of which Plaintiff is aware and did not disclose to Defendants in discovery, or that might be disclosed by Plaintiff in response to Defendants' discovery requests. Defendants anticipate issuing subpoenas to third parties believed to have knowledge, documentation and/or corroborating evidence concerning some of the prior art listed herein and/or additional prior art. These third parties include, but are not limited to, the authors, employers of authors, inventors, assignees, or former or current

[2] For purposes of these Invalidity Contentions, the term "general knowledge" includes the common knowledge and common sense of a person having ordinary skill in the art ("POSITA") as well as the general knowledge of a POSITA in the field.

employees of assignees or previous assignees, of the references identified in these invalidity contentions. Defendants reserve the right to supplement these Invalidity Contentions in light of any newly discovered information produced by these or other individuals or entities from which Defendants may seek discovery.

E. Incorporation by Reference

Defendants herein incorporate by reference all arguments made in any IPR petitions challenging the Asserted Patents, filed by Defendants or any other party, including any filings either on or after the filing of these Invalidity Contentions.

II. PRIORITY DATES OF THE CLAIMS OF THE ASSERTED PATENTS

It is Plaintiff's burden to show entitlement to its asserted "priority date to which each asserted claim allegedly is entitled." (P.R. 3-1(e)). Plaintiff contends in its Infringement Contentions that the priority dates for *the patents* (but otherwise providing no other position as to individual Asserted Claims) are as follows:

U.S. Patent No.	Priority date[3]
8,682,671	February 12, 2010
8,825,486	
8,914,291	
7,680,334	August 16, 2002

If Plaintiff attempts to rely on a date earlier than the priority listed above for any Asserted Claim(s), Defendants reserve the right to strike that reliance and/or otherwise supplement these contentions.

Moreover, a patentee only has a right to obtain the benefit of priority to a prior application if that application includes §112 support for the claim. *Anascape, Ltd. v. Nintendo of Am., Inc.*,

[3] Moreover, Plaintiff did not identify or produce any documents in connection with P.R. 3-2(b), confirming priority dates, other than what is on the face of the patents.

601 F.3d 1333, 1335 (Fed. Cir. 2010) ("To obtain the benefit of the filing date of a parent application, the claims of the later-filed application must be supported by the written description in the parent in sufficient detail that one skilled in the art can clearly conclude that the inventor invented the claimed invention as of the filing date sought.") (quotations omitted). Samsung contends that Asserted Claims of the '671, '486, and '291 patents are not entitled to claim priority to February 12, 2010 because U.S. Application No. 12/704,859 to which those patents claim priority lacks Section 112 support for those claims.

III. THE ASSERTED PATENTS ARE INVALID OVER PRIOR ART

A. Identification of Prior Art – Claim Charts

Defendants contend that the prior art references charted in Exhibits A-1 through A-25, Exhibits B-1 through B-25, Exhibits C-1 through C-25, and Exhibits D-1 through D-14, and/or described below anticipate and/or render obvious, alone or in combination, one or more of the Asserted Claims of the '671 patent,'486 patent, '291 patent, and '334 patent, respectively.

Defendants identify the following references as anticipating and/or rendering obvious one or more of the Asserted Claims of the Asserted Patents under 35 U.S.C. §§102 and/or 103. The tables of prior art references below are exemplary, and they do not constitute an admission that any reference not listed below does not also anticipate and/or render obvious the Asserted Claims of the Asserted Patents. Further, Defendants contend that any prior art reference in the attached charts that is charted for each limitation of any given claim, anticipates and/or renders obvious that claim, regardless of whether that prior art reference is listed in the following tables.

1. Prior Art Patents and Applications

a) The '671, '486, '291 Patents

Exhibit	Number	Filing Date	Published/Issued Date	Short Name
A-1, B-1, C-1	US3704345	3/19/1971	11/28/1972	Coker

A-2, B-2, C-2	US5652828	3/1/1996	7/29/1997	Silverman
A-3, B-3, C-3	US7010489	3/9/2000	3/7/2006	Lewis
A-4, B-4, C-4	US20020072908	3/27/2001	6/13/2002	Case
A-5, B-5, C-5	US7313523	5/14/2003	12/25/2007	Bellegarda
A-6, B-6, C-6	US20060106618	10/29/2004	5/18/2006	Racovolis
A-7, B-7, C-7	US7177807	12/6/2004	2/13/2007	Schmid
A-8, B-8, C-8	US20050261905	5/19/2005	11/24/2005	Pyo
A-9, B-9, C-9	US20080195391	3/28/2006	8/14/2008	Marple
A-10, B-10, C-10	US20070233492	7/28/2006	10/4/2007	Matsumoto
A-11, B-11, C-11	US20080255850	4/12/2007	10/16/2008	Cross
A-12, B-12, C-12	US20100017000	7/15/2008	1/21/2010	Pulz
A-13, B-13, C-13	US20090048843	8/8/2008	2/19/2009	Nitisaroj
A-14, B-14, C-14	US20050096909	10/29/2003	05/05/2005	Bakis

b) The ’334 Patent

Exhibit	Number	Filing Date	Published/Issued Date	Short Name
D-1	US5121441	9/21/1990	6/9/1992	Chefalas
D-2	US5315667	10/31/1991	5/24/1994	Fujisaki
D-3	JPH06223221A	1/25/1993	8/12/1994	Ito
D-4	US5745599	1/18/1995	4/28/1998	Uchiyama
D-5	US5682439	8/7/1995	10/28/1997	Beernink
D-6	US6275611	10/17/1996	8/14/2001	Parthasarathy ’611
D-7	US5742705	8/28/1997	4/21/1998	Parthasarathy ’705
D-8	JP2000011094A	6/26/1998	1/14/2000	Miura

2. Non-Patent Literature

Defendants identify the following non-patent literatures as anticipating and/or rendering obvious one or more of the Asserted Claims of the Asserted Patents under 35 U.S.C. §§102 and/or 103. The tables of non-patent literatures below are exemplary, and they do not constitute an admission that any reference not listed below does not also anticipate and/or render obvious the Asserted Claims of the Asserted Patents. Further, Defendants contend that any non-patent literature in the attached charts that is charted for each limitation of any given claim, anticipates and/or renders obvious that claim, regardless of whether that non-patent literature is listed in the following tables.

a) The ’671, ’486, ’291 Patents

Exhibit	Title	Date of Publication	Short Name
A-15, B-15, C-15	John F. Pitrelli et al., *The IBM Expressive Text-to-Speech Synthesis System for American English*, 14 IEEE TRANSACTIONS ON AUDIO, SPEECH, AND LANGUAGE PROCESSING 4, 1099 (2006)	June 19, 2006	Pitrelli (Expressive TTS)
A-16, B-16, C-16	John F. Pitrelli & Ellen M. Eide, *Expressive speech synthesis using American English ToBI: questions and contrastive emphasis*, 2003 IEEE WORKSHOP ON AUTOMATIC SPEECH RECOGNITION AND UNDERSTANDING, 694 (2003)	Nov. 30, 2003	Pitrelli (ToBI)
A-17, B-17, C-17	Ellen Eide et al. *Multilayered Extensions to the Speech Synthesis Markup Language for Describing Expressiveness*, INTERSPEECH, 1645 (2003)	Sept. 2003	Eide (Multilayered Extensions)
A-18, B-18, C-18	Laurie Hiyakumoto et al., *Semantic and Discourse Information for Text-to-Speech Intonation*, *in* CONCEPT TO SPEECH GENERATION SYSTEMS, 47 (1997)	1997	Hiyakumoto
A-19, B-19, C-19	Géza Németh et al., *Proposals for Extending the Speech Synthesis Markup Language (SSML) 1.0 from the Point-of-View of Hungarian TTS Developers* (2003)	2003	Németh
A-20, B-20, C-20	*Speech Manager*, *in* INSIDE MACINTOSH: SOUND (Apple Technical Library)	Jan. 1, 1994	Macintosh Speech Manager
A-21, B-21, C-21	W3C Speech Synthesis Markup Language (SSML) Ver. 1.1 WD4 , June 11, 2007	June 11, 2007	W3C Standard June 2007
A-22, B-22, C-22	W3C Speech Synthesis Markup Language (SSML) Ver. 1.1 WD4 , September 4, 2007	September 4, 2007	W3C Standard September 2007
A-23, B-23, C-23	*Speech Synthesis*, *in* Speech and Language Processing: An introduction to natural language processing, computational linguistics, and speech recognition (Daniel Jurafsky & James H. Martin Oct. 13, 2007)	October 13, 2007	Jurafsky
A-24, B-24, C-24	Rachel Baker et al., *Synthesising Contextually Appropriate Intonation In Limited Domains*, PROC. 5TH ISCA SPEECH SYNTHESIS WORKSHOP, 91 (2004)	June 2004	Baker
A-25, B-25, C-25	Leonardo Badino et al., *Identification of Contrast and its Emphatic Realization in HMM-Based Speech Synthesis*, INTERSPEECH 520 (2009).	September 2009	Badino

b) The ’334 Patent

Exhibit	Title	Date of Publication	Short Name
D-9	Charles Tappert, et al., *The State of the Art in On-Line Handwriting Recognition*, 12 IEEE TRANSACTIONS ON PATTERN ANALYSIS AND MACHINE INTELLIGENCE 8, 787 (1990)	Aug. 1990	Tappert
D-10	David M. Ford, On-Line Recognition of Connected Handwriting (1991) (Ph.D. dissertation, University of Nottingham)	May 1991	Ford
D-11	Scott D. Connell & Anil K. Jain, *Template-Based Online Character Recognition*, 34 PATTERN RECOGNITION 1, 1 (2001)	Aug. 16, 1999	Connell

3. Prior Art Systems

On information and belief, the systems identified below were in public use, on sale, or otherwise available to the public before the priority dates of the Asserted Patents. Defendants’ further investigation and/or subsequent discovery from Plaintiff or third parties with knowledge regarding prior art systems may reveal additional relevant prior art systems and/or further information regarding the systems identified below, or other relevant prior art systems. Defendants reserve the right to supplement these Invalidity Contentions, based on subsequent investigation and discovery, including from third parties.

a) The ’671, ’486, ’291 Patents

Exhibit	System	Public Availability Date	Short Name
A-C: 15, 16, 17	The IBM Expressive Speech Synthesis System	At least as early as 2006	IBM Expressive TTS System
A-C: 20	Macintosh Speech Manager	At least as early as 1994	Macintosh Speech Manager

b) The '334 Patent

Exhibit	System	Public Availability Date	Short Name
D-12	Apple Newton 120	1994	Apple Newton
D-13	Microsoft Tablet PC	2002	Microsoft Tablet
D-14	IBM ThinkPad/TransNote	2002	IBM ThinkPad

Defendants additionally identify any other prototypes, models, or systems of Cerence or Nuance Communications, Inc. ("Nuance"), or any subsidiary, parent or affiliate of the Cerence or Nuance. Defendants additionally identify and rely on any system, product, or public knowledge or use that embodies or otherwise incorporates any of the prior art patents and publications listed above. Defendants reserve the right to identify and rely on systems that represent different versions or are otherwise related variations of the identified systems. Defendants also incorporate by reference any and all other prior art systems identified in any other case brought by Plaintiff and/or involving the Asserted Patents or related patents.

B. The Asserted Patents Are Anticipated by the Prior Art

Some or all of the Asserted Claims of the Asserted Patents are invalid as anticipated under 35 U.S.C. §102 in view of each of the prior art references identified in the claim charts included in Exhibits A-1 - A-25, B-1 - B25, C-1 - C25, and D-1 – D-14, which identify examples of where each limitation of the Asserted Claims is found in the prior art references. As explained above, the cited portions of prior art references identified in the attached claim charts are exemplary and representative of the content and teaching of the prior art references, and should be understood in the context of the reference as a whole and as they would be understood by a person of ordinary skill in the art.

To the extent any item of prior art cited above is deemed not to disclose, explicitly or inherently, any limitation of an Asserted Claim of the Asserted Patents, Defendants contend that any difference between that prior art and the corresponding patent claim would have been either inherent in the art or obvious to a person of ordinary skill in the art, even if Defendants have not specifically denoted that the art is to be combined with the knowledge of a person of ordinary skill in the art.

C. The Asserted Patents Are Obvious Over the Prior Art

1. Exemplary combinations: ’671, ’486, and ’291 patents (“Contrastive Stress Patents”)

This section lists out the exemplary combinations of references that would render obvious the Asserted Claims of the Contrastive Stress Patents, and the next section, details the exemplary limitations and motivations to combine.

In addition to the exemplary combinations of references below, the combination of (1) any of the references listed as anticipatory in Section III.A.3 with the knowledge of one of ordinary skill or (2) any of the exemplary combinations listed below with the knowledge of ordinary skill would render obvious the Asserted Claims of the Asserted Patents.

These identified combinations are exemplary, and Samsung reserves the right to identify additional combinations during expert discovery and later stages of the case within the scope of the Local Rules and jurisprudence.

a) The ’671 & ’486 Patents

(1) Claim 1

- Schmid alone or in view of one or more of Bellegarda, Matsumoto, Marple, Nitisaroj, Hiyakumoto, IBM Expressive TTS System, Pitrelli (Expressive TTS), Pitrelli (ToBI), Eide (Multilayered Extensions), and Macintosh Speech Manager

- Racovolis alone or in view of one or more of Bellegarda, Matsumoto, Marple, Nitisaroj, Hiyakumoto, IBM Expressive TTS System, Pitrelli (Expressive TTS), Pitrelli (ToBI), Eide (Multilayered Extensions), and Macintosh Speech Manager
- Cross alone or in view of one or more of Bellegarda, Matsumoto, Marple, Nitisaroj, Hiyakumoto, IBM Expressive TTS System, Pitrelli (Expressive TTS), Pitrelli (ToBI), Eide (Multilayered Extensions), and Macintosh Speech Manager
- Case alone or in view of one or more of Bellegarda, Matsumoto, Marple, Nitisaroj, Hiyakumoto, IBM Expressive TTS System, Pitrelli (Expressive TTS), Pitrelli (ToBI), Eide (Multilayered Extensions), and Macintosh Speech Manager
- Lewis alone or in view of one or more of Bellegarda, Matsumoto, Marple, Nitisaroj, Hiyakumoto, IBM Expressive TTS System, Pitrelli (Expressive TTS), Pitrelli (ToBI), Eide (Multilayered Extensions), and Macintosh Speech Manager
- Coker alone or in view of one or more of Bellegarda, Matsumoto, Marple, Nitisaroj, Hiyakumoto, IBM Expressive TTS System, Pitrelli (Expressive TTS), Pitrelli (ToBI), Eide (Multilayered Extensions), and Macintosh Speech Manager
- Bakis alone or in view of one or more of Bellegarda, Matsumoto, Marple, Nitisaroj, Hiyakumoto, IBM Expressive TTS System, Pitrelli (Expressive TTS), Pitrelli (ToBI), Eide (Multilayered Extensions), and Macintosh Speech Manager
- Macintosh Speech Manager alone or in view of one or more of Bellegarda, Matsumoto, Marple, Nitisaroj, Hiyakumoto, Pitrelli (Expressive TTS), Pitrelli (ToBI), Eide (Multilayered Extensions), IBM Expressive TTS System.

- IBM Expressive TTS System alone or in view of one or more of Bellegarda, Matsumoto, Marple, Nitisaroj, Hiyakumoto, Pitrelli (Expressive TTS), Pitrelli (ToBI), Eide (Multilayered Extensions), and Macintosh Speech Manager.

(2) Claim 2

- Each the exemplary combinations identified in §III.C.1.a)(1) in further view of one or more of the W3C Standard, Jurafsky, Pulz, Németh, and Silverman.

(3) Claim 3

- Each the exemplary combinations identified in §III.C.1.a)(1) in further view of one or more of the W3C Standard, Jurafsky, Pulz, Baker, Silverman.

(4) Claim 5

- Each the exemplary combinations identified in §III.C.1.a)(1).

(5) Claim 6

- Each the exemplary combinations identified in §III.C.1.a)(1) in further view of one or more of the W3C Standard, Wilcox, and Eide ’526.

(6) Claim 7

- Each the exemplary combinations identified in §III.C.1.a)(1) in further view of W3C Standard.

(7) Claim 15

- Each the exemplary combinations identified in §III.C.1.a)(1).

(8) Claim 16

- Each the exemplary combinations identified in §III.C.1.a)(1) in further view of one or more of the W3C Standard, Jurafsky, Pulz, Németh, and Silverman.

(9) Claim 17

- Each the exemplary combinations identified in §III.C.1.a)(1) in further view of one or more of the W3C Standard, Jurafsky, Pulz, Baker, Silverman.

(10) Claim 19

- Each the exemplary combinations identified in §III.C.1.a)(1).

(11) Claim 20

- Each the exemplary combinations identified in §III.C.1.a)(1) in further view of one or more of the W3C Standard, Wilcox, and Eide ’526.

b) The ’291 Patent

(1) Claim 1

- Each the exemplary combinations identified in §III.C.1.a)(1) in further view of one or more of the W3C Standard September 2007, W3C Standard June 2007, Jurafsky, Németh, Taylor.

(2) Claim 2

- Each the exemplary combinations identified in §III.C.1.a)(1) in further view of one or more of the W3C Standard September 2007, W3C Standard June 2007, Jurafsky, Németh, Silverman, Taylor.

(3) Claim 4

- Each the exemplary combinations identified in §III.C.1.a)(1) in further view of one or more of the W3C Standard September 2007, W3C Standard June 2007, Jurafsky, Silverman, Eide Multilayered Extensions, Németh, Taylor.

(4) Claim 6

- Each the exemplary combinations identified in §III.C.1.a)(1) in further view of one or more of the W3C Standard September 2007, W3C Standard June 2007, Jurafsky, Németh, Silverman, Taylor.

(5) Claim 7

- Each the exemplary combinations identified in §III.C.1.a)(1) in further view of one or more of the W3C Standard September 2007, W3C Standard June 2007, Jurafsky, Németh, Silverman, Taylor.

2. Motivation to Combine: '671, '486, and '291 patents ("Contrastive Stress Patents")

A claimed invention is not obvious even if all claim limitations are known in the prior art — there must be a motivation to modify or combine the disclosures of multiple references. *See Forest Laboratories, LLC v. Sigmapharm Laboratories, LLC*, 918 F.3d 928, 934 (Fed. Cir. 2019) ("An invention is not obvious simply because all of the claimed limitations were known in the prior art at the time of the invention. Instead, we ask 'whether there is a reason, suggestion, or motivation in the prior art that would lead one of ordinary skill in the art to combine the references, and that would also suggest a reasonable likelihood of success.'") (citation omitted).

The Supreme Court in *KSR International Co. v. Teleflex Inc.*, 550 U.S. 398, 415 (2007), counseled an "an expansive and flexible approach" to that inquiry. The Court explained: The obviousness analysis cannot be confined by… overemphasis on the importance of published articles and the explicit content of issued patents. The diversity of inventive pursuits and of modern technology counsels against limiting the analysis in this way. In many fields it may be that there is little discussion of obvious techniques or combinations, and it often may be the case that market demand, rather than scientific literature, will drive design trends. *Id*. at 419. Indeed, the Federal

Circuit has since explained that "a claimed invention may be obvious even when the prior art does not teach each claim limitation, so long as the record contains some reason why one of skill in the art would modify the prior art to obtain the claimed invention." *Nike, Inc. v. Adidas AG*, 812 F.3d 1326, 1335 (Fed. Cir. 2016), *overruled on other grounds by Aqua Prod., Inc. v. Matal*, 872 F.3d 1290 (Fed. Cir. 2017); *Fleming v. Cirrus Design Corp.*, 28 F.4th 1214, 1222 (Fed. Cir. 2022) ("That the proposed combination of [Reference A] and [Reference B]—rather than one of the individual references—discloses the disputed claim limitations does not defeat the Board's conclusion of obviousness."). The Federal Circuit has explained that the motivation to modify or combine may be explicit (*Optivus Technology, Inc. v. Ion Beam Applications S.A.*, 469 F.3d 978, 990–91 (Fed. Cir. 2006)) or implicit (*DyStar Textilfarben GmbH & Co. Deutschland KG v. C.H. Patrick Co.*, 464 F.3d 1356, 1368 (Fed. Cir. 2006)). Indeed, the motivation to combine may come from "common sense." *See, e.g.*, *Perfect Web Techs., Inc. v. InfoUSA, Inc.*, 918 F.3d 928, 1331 (Fed. Cir. 2009). In addition, there is no need to show that there was a known problem with the prior art. *Unwired Planet, LLC v. Google Inc.*, 841 F.3d 995, 1003 (Fed. Cir. 2016). And the evidence supporting a motivation to combine need not itself be prior art. *See National Steel Car, Ltd. v. Canadian Pacific Ry., Ltd.*, 357 F.3d 1319, 1337–39 (Fed. Cir. 2004).

If the Asserted Claims of the Contrastive Stress Patents are not anticipated, they are obvious because a POSITA would have been motivated to modify or combine the prior art references identified in Section III.A, including the exemplary combinations set forth in Section III.C.1, for a variety of reasons. All of the prior art identified in Section III.A is analogous to their respective Asserted Patent because they are from the same field of endeavor and are also pertinent to the same problem(s) with which the named inventors of the Asserted Patents were involved. As explained further below, their modification or combination would have amounted to combining

prior art elements according to known methods to yield predictable results; the use of known techniques to improve similar devices or methods in the same way; a simple substitution of one known, equivalent element for another to obtain predictable results; applying a known technique to a known device or method that is ready for improvement to yield predictable results; choosing from a finite number of identified, predictable solutions, with a reasonable expectation of success; and/or there was an express teaching, suggestion, or motivation in the prior art for their combination. *See Q.I. Press Controls v. Lee*, 732 F.3d 1371, 1379 (Fed. Cir. 2014); *Randall Mfg. v. Rea*, 733 F.3d 1355, 1362-63 (Fed. Cir. 2013); *KSR*, 550 U.S. at 421.

The prior art discloses performing processing steps such as receiving text input from a speech enabled application and generating/providing a speech or audio output for the speech-enabled application. *See, e.g.*, Schmid (Exs. A-7, B-7, C-7), Racovolis (Exs. A-6, B-6, C-6), Cross (Exs. A-11, B-11, C-11), Lewis (Exs. A-3, B-3, C-3), Case (Exs. A-4, B-4, C-4). For example, Racovolis explains that "[t]here are a variety of text-to-speech engines (TSEs) on the market today … Typically these TSEs are invoked by an application running on a computer. The application invokes the TSE by utilizing programming hooks in a standard Speech Application Programming Interface (SAPI) to make programming calls into the SAPI. The TSE converts the text to speech and plays the speech to a user over the computer's speakers. For example, some systems enable users to listen to their email messages by playing the messages as speech, and in some cases, playing the speech over the user's phone which has access to the user's email server on a network." Racovolis ¶[0001]. Schmid further explains that, "[i]n an effort to make [speech synthesis technology] more readily available, an interface between engines and applications was specified by a set of application programming interfaces (API's) referred to as the Microsoft Speech API version 4.0 (SAPI4)." Schmid at 1:37-48. As demonstrated by this prior art, it was known to

implement a speech-enabled application as claimed. Thus, if a prior art reference or combination of references does not disclose or suggest the limitations involving a speech-enabled application, the claims nevertheless would have been obvious.

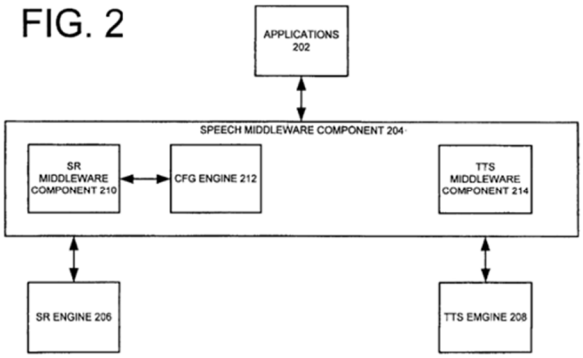

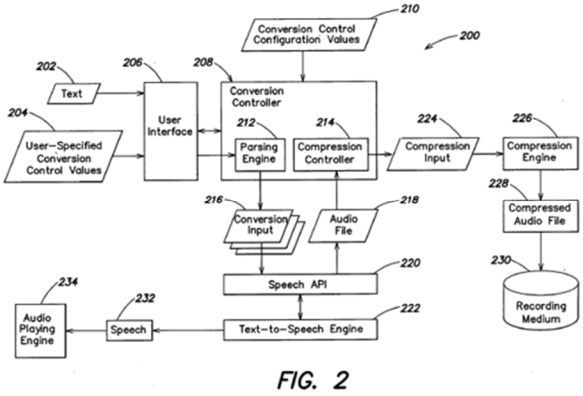

Schmid, FIG. 2; Racovolis, FIG. 2

The prior art also discloses that artisans in the field of TTS were developing systems to provide more natural sounding TTS (i.e., to make TTS systems speak more like humans), including by designing them to express contrastive stress. *See, e.g.*, Eide '443 ¶[0003]; Eide (Corpus Based); Pitrelli (Expressive TTS), Nitisaroj ¶¶ [0010], [0076], [0079], [0086], Badino (Exs. A-25, B-25, C-25). The Contrastive Stress patents acknowledge that "[h]uman speakers naturally apply contrastive stress to emphasize a word or syllable contrary to its normal accentuation, in order to contrast it with an alternative word or syllable or to focus attention on it" and it was known implement TTS systems to express contrastive stress. *See* '671 patent, 8:20-31. It was known, for example, that "[a] desirable quality of a TTS system is the ability to speak expressively, dynamically adapting the style of voice according to the message. Such a system would, for example, speak in an upbeat manner when conveying good news and in a more subdued tone when delivering bad news. Other examples of expressions that a TTS system might need include confusion, ***showing contrastive emphasis***, apology, asking a question, exuding confidence,

greeting, farewell, etc." Eide (Corpus Based), at 79-80 (emphasis added). Thus, the prior art suggests implementing TTS with contrastive stress.

The prior art also discloses systems and techniques for implementing TTS with contrastive stress by identifying portions of text input that differ and assigning contrastive stress. Indeed, Meyer '344 states that "[n]umerous techniques" existed for processing and analyzing a text input to determine prosodic information that can be inferred from the text, including contrastive stress. *See* Meyer '344 ¶[0047] ("Front-end 250 may process and/or analyze text input 240 to determine the sequence of words and/or sounds represented by the text, as well as any prosodic information that can be inferred from the text. Examples of prosodic information include, but are not limited to, locations of phrase boundaries, prosodic boundary tones, pitch accents, word-, phrase- and sentence-level stress or emphasis, ***contrastive stress*** and the like. ***Numerous techniques exist for such front-end processing***, ***including those used in known TTS systems***."); *see also* Bellegarda (Exs. A-5, B-5, C-5), Matsumoto (Exs. A-10, B-10, C-10), Marple (Exs. A-9, B-9, C-9), Hiyakumoto (Exs. A-18, B-18, C-18); Nitisaroj (Exs. A-13, B-13, C-13), Pitrelli (ToBI) (A-16, B-16, C-16), Pitrelli (Expressive TTS) (Exs. A-15, B-15, C-15), Eide (Multilayered Extensions) (Exs. A-17, B-17, C-17), Macintosh Speech Manager (A-20, B-20, C-20), W3C Standard June 2007 (Exs. A-21, B-21, C-21), Németh (Exs. A-19, B-19, C-19), Badino (Exs. A-25, B-25, C-25).

FIG. 8

	b=1	b=2	b=3	b=4	b=5	b=6
t (n=1) =1	KYOU NO	TOHOKU	CHIHOU NO	TENKI WA	HARE	DESU
t (n=2) =2	KYOU NO	KANTO	CHIHOU NO	TENKI WA	HARE	DESU
t (n=3) =3	KYOU NO	TOKAI	CHIHOU NO	TENKI WA	KUMORI TOKIDOKI AME	DESU
t (n=4) =4	ASU NO	KANSAI	CHIHOU NO	TENKI WA	HARE	DESU
t (n=5) =5	ASU NO	KANSAI	CHIHOU NO	SAITEIKION WA	JUDO	DESU
v (n, b)	0.5	1.08	0	1	1.83	0
C1 (n, b)	0.95	1.08	0.85	1.06	1.25	0.85

Matsumoto, FIG. 8

Thus, if a prior art reference or combination of references does not disclose or suggest the limitations involving a identifying or assigning contrastive stress, the claims nevertheless would have been obvious, at least under the rationales articulated in *KSR*.

Dependent claims 2 and 16 of the ’671 and ’486 patents and dependent claims 2 and 6 of the ’291 patent generally recite that “identifying” step is based on normalized orthography or normalization type. As the ’671 patent admits, “[t]echniques for normalizing text are known.” ’671 patent, 15:11-12. The prior art disclose or suggests this feature. *See, e.g.,* Bellegarda (Exs. A-5, B-5, C-5), Matsumoto (Exs. A-10, B-10, C-10), W3C Standard September 2007 (Exs. A-22, B-22, C-22), Németh (Exs. A-19, B-19, C-19); Pulz (Exs. A-12, B-12, C-12); Silverman (A-2, B-2, C-2). For example, Silverman states “[m]ore specifically, the invention has the more specific object of utilizing prosody rules applied to an automated text analysis to exploit prosodic characteristics particular to and readily ascertainable from the type and format of the text itself, and from the context and purpose of the discourse involving end-user access to that text.”

Silverman at 5:15-27; *see also id*. 19:31-22:40 (Detailed Rules for Named Field), 22:41 -25:15 (Detailed Rules for Address Field); Eide '443 ¶[0019] ("Generally, a text-to-speech system is configured for converting text as specified by a human or an application into an audio file of synthetic speech. In a basic system 100, such as shown in FIG. 1, there may typically be an arrangement for text normalization 104 which accepts text input 102."); Stoimenov ¶[0016].

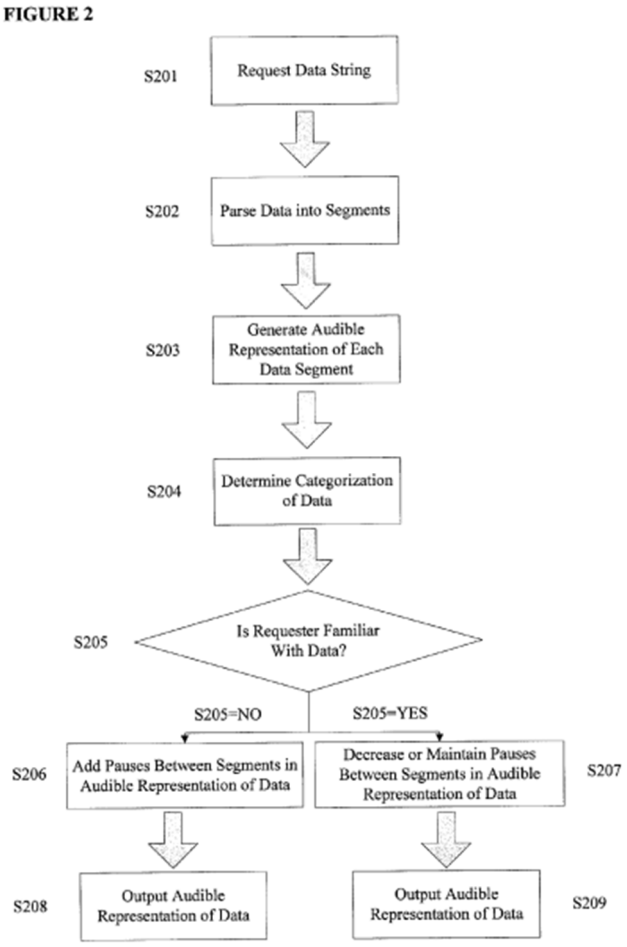

Pulz, Fig. 2

Thus, if a reference or combination of references does not expressly disclose this feature, dependent claims 2 and 16 of the '671 and '486 patents and dependent claims 2 and 6 of the '291 patent nevertheless would have been obvious, at least under the rationales articulated in *KSR*.

Dependent claims 3 and 17 of the ’671 and ’486 patents generally recite “the first and second text strings represent different numerical fields within a larger text string.” The prior art discloses or suggests this feature. *See, e.g.,* Matsumoto (Exs. A-10, B-10, C-10), Macintosh Speech Manager (Exs. A-20, B-20, C-20), W3C Standard September 2007 (Exs. A-22, B-22, C-22), Baker (Exs. A-24, B-24, C-24); Pulz (Exs. A-12, B-12, C-12). For example, it was known to apply different prosody to different fields of an input text sting, including numerical fields. *See*, e.g.*,* Silverman at 11:3-9, 12:32-52, 14:30-43, 32:50-63; Pulz ¶¶[0043]-[0056], [0064], Claims 1-8. Thus, if a reference or combination of references does not expressly disclose this feature, dependent claims 3 and 17 nevertheless would have been obvious, at least under the rationales articulated in *KSR*.

Dependent claims 5 and 19 of the ’671 and ’486 patents generally recite “receiving the first and second text strings as first and second parameters passed to a function called by the speech-enabled application to render the first and second text strings with a contrastive stress pattern.” The prior art discloses or suggests this feature. *See, e.g.*, Schmid (Exs. A-7, B-7, C-7), Cross (Exs. A-11, B-11, C-11), Racovolis (Exs. A-6, B-6, C-6). For example, Schmid discloses “the application indicates to the SpVoice object 216 that is wishes some textual information to be spoken. This… can be done, for example, by calling Speak or SpeakStream on the SpVoice object 216.” Schmid at 9:17–24. As another example, Racovolis discloses that “[f]or a given text portion, values may be set for any of the following conversion parameters: volume, cadence speed, voice accent, voice fluctuation, syllable emphasis, pausing before and/or after the portion, other parameters, and any suitable combination thereof. Values may be set for any of these parameters and sent to a text-to-speech engine (TSE) along with the given text portion. For example, a programming call may be made to a standard Speech API (SAPI) for each text portion, including

set values for certain SAPI parameters." Racovolis ¶[0003]; *see also id.* ¶[0050]. Thus, if a reference or combination of references does not expressly disclose this feature, dependent claims 5 and 19 nevertheless would have been obvious, at least under the rationales articulated in *KSR*.

Dependent claims 6 and 20 of the '671 and '486 patents generally recite "the speech synthesis output comprises identification of a plurality of audio recordings to render the plurality of text strings as speech, at least one of the plurality of audio recordings being selected to render the first portion of the first text string as speech carrying contrastive stress." The prior art discloses or suggests this feature. *See, e.g.*, Pitrelli (Expressive TTS) (Exs. A-15, B-15, C-15), Cross (Exs. A-11, B-11, C-11), W3C Standard September 2007 (Exs. A-22, B-22, C-22), Qin ¶¶[0009], [0048]-[0053], Eide '526 ¶¶[0002], [0051]-[0052], [0057], Claims 1-2. Thus, if a reference or combination of references does not expressly disclose this feature, dependent claims 6 and 20 nevertheless would have been obvious, at least under the rationales articulated in *KSR*.

Dependent claim 7 of the '671 and '486 patents generally recite "wherein the speech synthesis output comprises an indication of the identified first portion of the first text string as being assigned contrastive stress." The prior art discloses or suggests this feature. *See, e.g.*, Pitrelli (Expressive TTS) (Exs. A-15, B-15, C-15), Pitrelli (ToBI) (Exs. A-16, B-16, C-16), Eide (Multilayered Extensions) (Ex. A-17, B-17, C-17), Cross (Ex. A-11, B-11, C-11), Schmid (Exs. A-11, B-11, C-11). Thus, if a reference or combination of references does not expressly disclose this feature, dependent claim 7 nevertheless would have been obvious, at least under the rationales articulated in *KSR*.

Dependent claim 4 of the '291 patent generally recites that the "identifying" is performed based in part "on at least one indication in the text input that the contrastive stress pattern is desired in association with the plurality of tokens." The prior art discloses or suggests this feature. *See,*

e.g., Racovolis (Exs. A-6, B-6, C-6), Cross (Exs. A-11, B-11, C-11), W3C Standard September 2007 (A-22, B-22, C-22), Németh (Exs. A-19, B-19, C-19), Bakis (A-14, B-14, C-14), Eide (Multilayered Extensions) at 2 ("The left-hand side of the figure shows interfaces between the multilayered structure and users of the expressive text-to-speech system. These interface boxes enable developers with different areas of expertise to interact with the system in the manner that is most natural and suitable for them. For example, a natural-language-generation developer could interface with the mid-level markup layer of the figure, since that developer would know the expressive states used in a given dialog system. The states such as 'showing contrast' or 'asking a question' could be passed to the expressive TTS system directly at this level. A movie director, on the other hand, would have a concept of the emotion he is trying to portray, and would most suitably interface with the system at a high level of abstraction. Furthermore, the interfaces themselves could vary; anything from assembly code to a GUI could be used to interface with the system.")

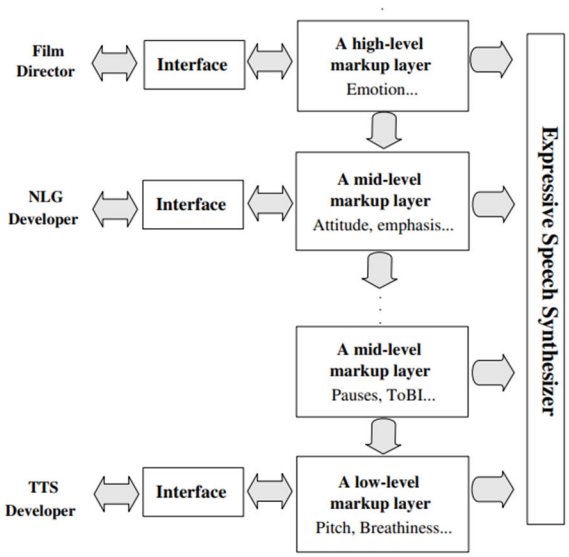

Figure 1: The proposed multilayered markup structure, showing four example hierarchical extended-SSML layers.

Eide (Multilayered Extensions), Figure 1

Cerence Operating Company, Ex. 2004
Samsung Electronics Co., Ltd., etc. v. Cerence Operating Company, IPR2025-00459
Page 26 of 45

Thus, if a reference or combination of references does not expressly disclose this feature, dependent claim 4 of the ’291 patent nevertheless would have been obvious, at least under the rationales articulated in *KSR*.

Dependent claim 7 of the ’291 patent generally recites “the at least one token to be rendered with contrastive stress is identified based at least in part on an order of the plurality of tokens in the text input.” The prior art discloses or suggests this feature. *See, e.g.*, Bellegarda (Exs. A-5, B-5, C-5), Matsumoto (Exs. A-10, B-10, C-10), Hiyakumoto (Exs. A-18, B-18, C-18), Marple (Exs. A-9, B-9, C-9), Nitisaroj (Exs. A-13, B-13, C-13), Pitrelli (ToBI) (Exs. A-16, B-16, C-16), Pitrelli (Expressive TTS) (Exs. A-15, B-15, C-15), Eide (Multilayered Extensions) (Exs. A-17, B-17, C-17), Macintosh Speech Manager (Exs. A-20, B-20, C-20), W3C Standard June 2007 (Exs. A-21, B-21, C-21), Németh (Exs. A-19, B-19, C-19). For example, Bellegarda discloses that “[i]f a current word is already in the FIFO buffer, no accent is applied to the word when spoken, but if the word is not in the buffer (i.e., the current word is a “new” word), prominence is applied to the word. In either event, the current word is placed at the “top” of the FIFO buffer, as the word is the most recent spoken word. Because the FIFO buffer has a set depth, words that are “old” are pushed out of the buffer. In a further alternative embodiment, in addition to the list of recently spoken words stored in the FIFO buffer, each word is also compared against synonyms of the words contained in the FIFO buffer. In yet another alternative embodiment, the comparison is based on word roots (e.g., word roots are stored in the FIFO buffer in addition to, or in lieu of, the recently spoken words).” Bellegarda at 5:64-6:10. As another example, Hiyakumoto discloses “a search for keywords commonly used to indicate contrast (e.g. however, unlike, on-the-other-hand), as well as explicit negation (not) must be incorporated. Identifying parallel phrasing may also be useful in identifying contrastive relationships not encoded in WordNet (namely for non-antonymic contrasts

between adjectives and adverbs)." Hiyakumoto at 51-52. Thus, if a reference or combination of references does not expressly disclose this feature, dependent claim 7 of the '291 patent nevertheless would have been obvious, at least under the rationales articulated in *KSR*.

3. Exemplary combinations: '334 Patent

This section lists out the exemplary combinations of references that would render obvious the Asserted Claims of the '334 Patent, and the next section, details the exemplary limitations and motivations to combine.

In addition to the exemplary combinations of references below, the combination of (1) any of the references listed as anticipatory in Section III.A.3 with the knowledge of one of ordinary skill or (2) any of the exemplary combinations listed below with the knowledge of ordinary skill would render obvious the Asserted Claims of the Asserted Patents.

These identified combinations are exemplary, and Samsung reserves the right to identify additional combinations during expert discovery and later stages of the case within the scope of the Local Rules and jurisprudence.

a) '334 Patent

(1) Claims 1 and 15

- Beernink alone or in view of one or more of Fujisaki, Miura, Parthasarathy '611, and Parthasarathy '705, Tappert, and Connell
- Ford alone or in view of one or more of Fujisaki, Miura, Parthasarathy '611, Parthasarathy '705, Tappert, and Connell
- Parthasarathy '705 alone or in view of one or more of Fujisaki, Miura, Parthasarathy '611, Ford, Tappert, and Connell
- Parthasarathy '611 alone or in view of one or more of Fujsiaki, Miura, Parthasarathy '705, Ford, Tappert, and Connell

- Apple Newton alone or in view of one or more of Fujisaki, Miura, Parthasarathy ’611, Parthasarathy ’705, Tappert, and Connell
- Microsoft Tablet alone or in view of one or more of Fujisaki, Miura, Parthasarathy ’611, Parthasarathy ’705, Tappert, and Connell
- IBM ThinkPad alone or in view of one or more of Fujisaki, Miura, Parthasarathy ’611, Parthasarathy ’705, Tappert, and Connell

(2) Claims 2 and 20

- Each the exemplary combinations identified in §III.C.3.a)(1) in further view of one or more of Uchiyama, and Chefalas.

(3) Claims 4 and 22

- Each the exemplary combinations identified in §III.C.3.a)(1)

(4) Claims 8 and 26

- Each the exemplary combinations identified in §III.C.3.a)(1)

(5) Claims 9 and 27

- Each the exemplary combinations identified in §III.C.3.a)(1)

(6) Claims 10 and 28

- Each the exemplary combinations identified in §III.C.3.a)(1)

(7) Claim 16

- Each the exemplary combinations identified in §III.C.3.a)(1)

(8) Claim 19

- Each the exemplary combinations identified in §III.C.3.a)(1)

4. Motivation to Combine: ’334 Patent

If the Asserted Claims of the ’334 Patent are not anticipated, they are obvious because a POSITA would have been motivated to modify or combine the prior art references identified in

Section III.A, including the exemplary combinations set forth in Section III.C.3, for a variety of reasons. All of the prior art identified in Section III.A is analogous to their respective Asserted Patent because they are from the same field of endeavor and are also pertinent to the same problem(s) with which the named inventors of the Asserted Patents were involved. As explained further below, their modification or combination would have amounted to combining prior art elements according to known methods to yield predictable results; the use of known techniques to improve similar devices or methods in the same way; a simple substitution of one known, equivalent element for another to obtain predictable results; applying a known technique to a known device or method that is ready for improvement to yield predictable results; choosing from a finite number of identified, predictable solutions, with a reasonable expectation of success; and/or there was an express teaching, suggestion, or motivation in the prior art for their combination. *See Q.I. Press Controls v. Lee*, 732 F.3d 1371, 1379 (Fed. Cir. 2014); *Randall Mfg. v. Rea*, 733 F.3d 1355, 1362-63 (Fed. Cir. 2013); *KSR*, 550 U.S. at 421.

The prior art discloses or suggests the limitations related to a handwriting recognition device including a processor that performs steps such detecting a handwritten pattern entered by a user. *See, e.g.*, Beernink (Ex. D-5), Ford (Ex. D-11), Parthasarathy '611 (Ex. D-6), Parthasarathy '705 (Ex. D-7), Fujisaki (Ex. D-2), Miura (Ex. D-8). For example, Beernink discloses "information is input into the pen-based computer system by 'writing' on the tablet 44 with stylus 110 or the like. Information concerning the location of the tip 132 of stylus 110 on the tablet 44 of the display system 16 is input into the CPU 12 via controller 28. Typically, this information comprises the Cartesian (i.e. x & y) coordinates of a pixel of the screen 60 over which the tip 132 of the stylus 110 is positioned. The CPU 12 then processes the data under control of an operating system (stored in ROM 40) and possibly an application program stored in memory system 14 or

elsewhere (such as on a PCMCIA card engaged with PCMCIA connector 24)." Beernink at 8:21-34. Thus, if a prior art reference or combination of references does not disclose or suggest the limitations related to a handwriting recognition device including a processor that performs steps such detecting a handwritten pattern entered by a user, the claims nevertheless would have been obvious, at least under the rationales articulated in *KSR*.

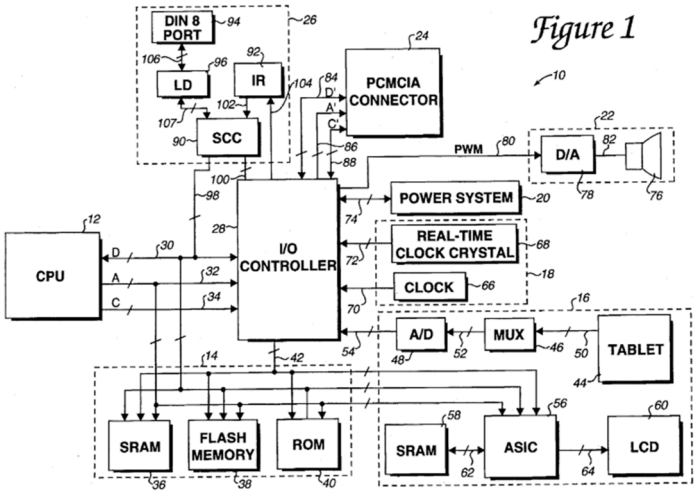

Beernink at FIG. 1, Parthasarathy, FIG. 10

The prior art discloses or suggests the limitations related to a recognizing process that includes comparing a handwritten pattern to templates. *See, e.g.,* Beernink (Ex. D-5), Parthasarathy '611 (Ex. D-6), Ford (Ex. D-11), Fujisaki (Ex. D-2), Miura (Ex. D-8), Connell (Ex. D-12). For example, Fujisaki discloses that "[m]any on-line, handwriting recognition systems use curve matching methods to match an unknown character against prototype (template) characters." As another example, Parthasarathy '611 discloses that "[a] popular paradigm for character recognition of handwritten Chinese input is to store one or more templates for each character of interest and using a nearest neighbor classifier to find the identity [*sic*] of the handwritten input. A nearest neighbor classifier is one that simply finds the nearest or best matching template and reports the

identity of that template as the identity of the handwritten input.") Parthasarathy '611 at 1:38-48. Thus, if a prior art reference or combination of references does not disclose or suggest the limitations related to a recognizing process that includes comparing a handwritten pattern to templates, the claims nevertheless would have been obvious, at least under the rationales articulated in *KSR*.

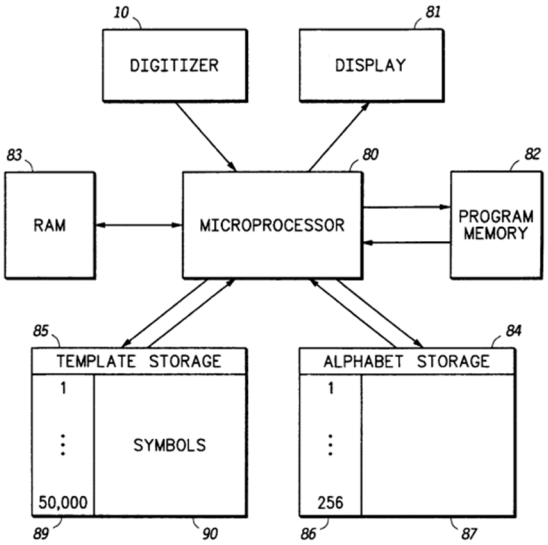

FIG.10

Parthasarathy '611, FIG. 10

The prior art discloses the limitations related to returning a best template or interpretation and presenting it. *See, e.g.,* Beernink (Ex. D-5), Parthasarathy '611 (Ex. D-6), Parthasarathy '705 (Ex. D-7), Ford (Ex. D-11), Fujisaki (Ex. D-2), Miura (Ex. D-8), Connell (Ex. D-12). For example, Fujisaki discloses a screen 40 which shows the user why a handwriting recognition device misrecognized the user's writing of "now" as "wow." Screen 40 shows the existing prototypes (or templates) for the letter "n" including the "matched prototype (with unintended label w)" along with other prototypes for the unintended label w. Fujisaki at 5:25-51. Thus, if a prior art reference or combination of references does not disclose or suggest the limitations related to returning a best

template or interpretation and presenting it, the claims nevertheless would have been obvious, at least under the rationales articulated in *KSR*.

FIG. 2

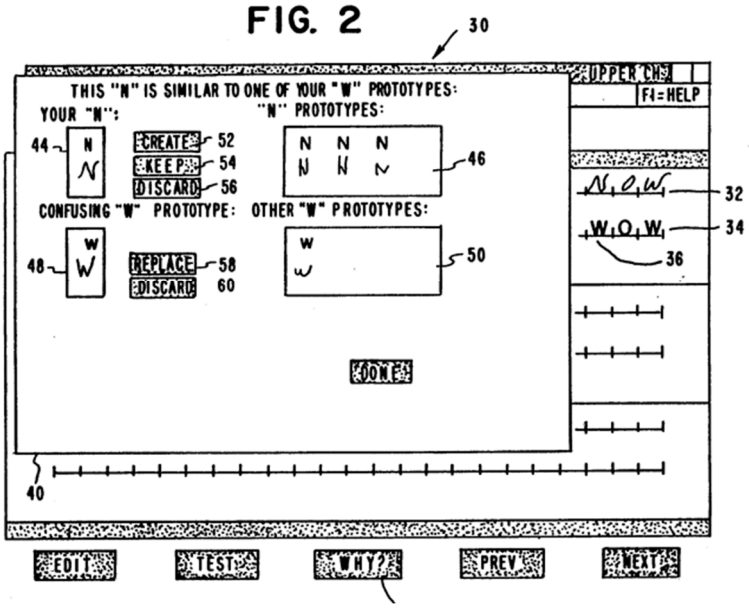

Fujisaki, FIG. 2

Dependent claims 2 and 20 generally recite that the handwriting symbol patterns are represented by geometrical information. The prior art discloses or suggests this feature. *See, e.g.*, Ford (Ex. D-11). Thus, if a prior art reference or combination of references does not disclose or suggest the limitations related to representing the handwriting symbol patterns by geometrical information, the claims nevertheless would have been obvious, at least under the rationales articulated in *KSR*.

Dependent claims 4 and 22 generally recite presenting "presenting the whole best handwriting symbol pattern." The prior art discloses or suggests this feature. *See, e.g.*, Fujisaki (Ex. D-2). Thus, if a prior art reference or combination of references does not disclose or suggest the limitations related to presenting the whole best handwriting symbol pattern, the claims nevertheless would have been obvious, at least under the rationales articulated in *KSR*.

Dependent claims 8 and 26 generally recite that a presentation area overlaps the input area. The prior art discloses or suggests this feature. *See, e.g.*, Fujisaki (Ex. D-2), Beernink (Ex. D-5). Thus, if a prior art reference or combination of references does not disclose or suggest the limitations related to a presentation area that overlaps the input area, the claims nevertheless would have been obvious, at least under the rationales articulated in *KSR*.

Dependent claims 9 and 27 generally recite returning at least one alternative template or interpretation. The prior art discloses or suggests this feature. *See, e.g.*, Fujisaki (Ex. D-2), Parthasarathy '611 (Ex. D-6). Thus, if a prior art reference or combination of references does not disclose or suggest the limitations related to returning at least one alternative template selected from the plurality of templates, the claims nevertheless would have been obvious, at least under the rationales articulated in *KSR*.

Dependent claims 10 and 28 generally recite presenting an alternative template or interpretation at the request of a user. The prior art discloses or suggests this feature. *See, e.g.*, Fujisaki (Ex. D-2). Thus, if a prior art reference or combination of references does not disclose or suggest the limitations related to presenting the at least one of the plurality of handwriting symbol patterns of the at least one alternative template at a request of a user, the claims nevertheless would have been obvious, at least under the rationales articulated in *KSR*.

Dependent claim 16 generally recites retrieving a best allograph that is associated with the best handwriting symbol pattern of the best template. The prior art discloses or suggests this feature. *See, e.g.*, Fujisaki (Ex. D-2), Parthasarathy '611 (Ex. D-6). Thus, if a prior art reference or combination of references does not disclose or suggest the limitations related to retrieving a best allograph that is associated with the best handwriting symbol pattern of the best template, the claims nevertheless would have been obvious, at least under the rationales articulated in *KSR*.

Dependent claim 19 generally recites presenting the best handwriting symbol pattern of the best template on a screen. The prior art discloses or suggests this feature. *See, e.g.*, *See, e.g.*, Fujisaki (Ex. D-2), Parthasarathy '611 (Ex. D-6). Thus, if a prior art reference or combination of references does not disclose or suggest the limitations related to presenting the best handwriting symbol pattern of the best template on a screen, the claims nevertheless would have been obvious, at least under the rationales articulated in *KSR*.

IV. THE ASSERTED PATENTS ARE INVALID UNDER 35 U.S.C. §112

Based on Defendants' present understanding of Plaintiff's asserted scope of the claims of the Asserted Patents, to the extent such positions can be understood from Plaintiff's Infringement Contentions, and to the extent Plaintiff contends that the asserted claims are not anticipated or obvious in view of the prior art, Defendants contend that the following limitations render the Asserted Claims invalid based on indefiniteness under 35 U.S.C. §112 ¶ 2 or enablement or written description under 35 U.S.C. §112 ¶ 1:

A. The '671 & '486 Patents

- "identifying a first portion of a first text string of the plurality of text strings as differing from a corresponding first portion of a second text string of the plurality of text strings, and a second portion of the first text string as not differing from a corresponding second portion of the second text string"
- "assigning contrastive stress to the identified first portion of the first text string, but not to the identified second portion of the first text string" / "assigning contrastive stress to the first portion of the first text string and/or to the corresponding first portion of the second text string, but not to the second portion of the first text string, and not to the corresponding second portion of the second text string"

- "at least one software module configured to identify a first portion of a first text string of the plurality of text strings as differing from a corresponding first portion of a second text string of the plurality of text strings, and a second portion of the first text string as not differing from a corresponding second portion of the second text string"
- "wherein the at least one software module is configured to identify the first portion of the first text string as differing from the corresponding first portion of the second text string based at least in part on a normalized orthography of the first and second text strings."
- "generating … speech synthesis output"
- "providing the speech synthesis output"

B. The '291 Patent

- "identifying at least one first portion of at least one token of the text input that differs from at least one corresponding first portion of at least one other token of the text input, and at least one second portion of the at least one token that does not differ from at least one corresponding second portion of the at least one other token"
- "assigning contrastive stress to the identified at least one first portion of the at least one token, but not to the identified at least one second portion of the at least one token"
- "identifying a plurality of tokens of the text input of a same text normalization type for which a contrastive stress pattern is to be applied," and "identifying the at least one token to be rendered with contrastive stress from among the plurality of tokens of the same text normalization type"

- "tokenizing the text input," "automatically identifying the text normalization type of the plurality of tokens," and "automatically determining that the contrastive stress pattern is to be applied for the plurality of tokens."

C. The '334 Patent

- "A method performed by a handwriting recognition device for presenting a recognized handwritten symbol"
- "the recognition device having a processor and detection means for detecting entry of a handwritten symbol"
- "returning a best template selected from the plurality of templates that represents one of the plurality of handwriting symbol patterns as a best handwriting symbol pattern which, according to a predefined rule, is most similar to the handwritten pattern"
- "geometrical information relating to an appearance of said handwriting symbol pattern"
- "wherein the handwritten pattern is entered on an input area on the screen"
- "the whole best handwriting symbol pattern"
- "returning at least one alternative template selected from the plurality of templates"
- "the step of presenting comprises presenting the at least one of the plurality of handwriting symbol patterns of the at least one alternative template at a request of a user."
- "A method performed by a handwriting recognition device for sequentially presenting a plurality of recognized handwritten symbols"

- "wherein the step of recognizing comprises returning at least one alternative interpretation"

V. THE ASSERTED PATENTS ARE INVALID UNDER 35 U.S.C. §101

The Asserted Claims are directed to abstract ideas and lack an inventive concept, and they are therefore ineligible for patent protection under the subject matter requirements of Section 101 of the Patent Act. In accordance with the Standing Order Regarding Subject Matter Eligibility Contentions issued by this Court on July 25, 2019, Defendants submit their subject matter eligibility contentions concurrently herewith as Exhibits A-26, B-26, C-26, and D-15.

VI. ADDITIONAL RELEVANT PRIOR ART

In addition to those references cited in prior sections, Defendants hereby cite the following additional references as being relevant to the subject matter claimed in the Asserted Patents. In addition, Defendants incorporate by reference all references found on the face of the Asserted Patents and/or in the prosecution history of the Asserted Patents or patent family. Defendants reserve the right to rely on one or more of the following references as anticipatory references under 35 U.S.C. §102, as further evidence of obviousness under 35 U.S.C. §103, as background references demonstrating the state of the art, as a limitation upon the doctrine of equivalents, or for any other purpose. Based on further investigation and discovery, based on positions that Plaintiff may take regarding the scope of the asserted claims, and/or based on the Court's claim construction, Defendants reserve the right to revise these contentions and to rely on these references to prove the invalidity of the Asserted Patents in a manner consistent with this Court's Rules and with the Federal Rules of Civil Procedure.

A. Patents & Published Patent Applications

1. The ’671, ’486, ’291 Patents

Number	Filing Date	Published/Issued Date	Short Name
EP1016985A	12/23/1999	5/7/2000	Wilcox
US20020191757	6/3/2002	12/19/2002	Belrose
US20040193421	3/25/2003	9/30/2004	Blass
US20050177369	2/11/2004	8/11/2005	Stoimenov
US20050256716	5/13/2004	11/17/2005	Bangalore
EP1702319B1	10/27/2004	12/10/2008	Schramm
US20050144002	12/9/2004	6/30/2005	Janardhanan
US20070055526	8/25/2005	3/8/2007	Eide ’526
US20070033049	6/27/2006	2/8/2007	Qin
US20080282153	5/9/2007	11/13/2008	Kindeberg
US20070106514	11/7/2006	5/10/2007	Oh
US20090076819	2/22/2007	3/19/2009	Wouters
US20090254345A1	4/5/2008	3/31/2015	Fleizach
US20080294443	7/14/2008	11/27/2008	Eide ’443
US20080288257A1	7/14/2008	11/20/2008	Eide ’257
US8306356	9/23/2008	11/6/2012	Bever
US20100332224	6/30/2009	12/30/2010	Makela
US20110202344	02/12/2010	8/18/2011	Meyer ’344
JP2006039120	07/26/2004	02/09/2006	Hiroe
JP2009042509A	08/09/2007	02/26/2009	Kagoshima
KR100590553B1	05/21/2004	06/19/2006	Nan
US7953600B2	04/24/2007	05/31/2011	Hertz
US8065150	07/14/2008	11/22/2011	Eide ’150
US8510113B1	08/31/2006	09/13/2013	Conkie
US5652828A	03/01/1996	07/29/1997	Ernest
JP2740510B2	02/09/1988	04/15/1998	Tetsuya
US5212731A	09/17/1990	05/18/1993	Zimmerman
US20090055158A1	08/21/2008	02/26/2009	Xu
US8712776B2	09/29/2008	04/29/2014	Bellegarda ’776
EP1212748A1	08/16/2000	06/12/2002	Benzmuller
US6553341B1	04/27/1999	04/22/2003	Mullaly
EP1835488B1	03/17/2006	11/19/2008	Wouters ’488

2. The ’334 Patent

Number	Filing Date	Published/Issued Date	Short Name
US5073956	10/23/1989	12/17/1991	Kawamoto
US5016000	6/28/1990	5/14/1991	Bugg
EP0539749B1	9/30/1992	2/8/2000	Bellegarda ’749
US5644652A	4/19/1995	7/1/1997	Bellegarda ’652
US5796867	6/12/1996	8/18/1998	Chen
US6421461B1	9/20/1996	7/16/2002	Arai
EP0896704A1	3/6/1997	2/17/1999	Ehsani
US6272243	9/15/1997	8/7/2001	Ulgen
US4972499	3/28/1989	11/20/1990	Kurosawa
JP2000036007A	7/16/1998	2/2/2000	Kumazawa
US6289124	4/26/1999	9/11/2001	Okamoto
US5555320A	11/29/1993	9/10/1996	Irie
JP2000035844A	7/17/1998	02/02/2000	Yamamoto
JP2622004B2	2/6/1990	6/18/1997	Sasaki
US6084985A	10/3/1997	7/4/2000	Dolfing
JPH0573725A	9/17/1991	3/26/1993	Chatani
US6789231B1	10/5/1999	9/7/2004	Reynar
JP2001256438A	3/14/2000	9/21/2001	Otomo
JP2002007962A	6/27/2000	1/11/2002	Shiraishi
JP2002175498A	8/29/2001	6/21/2002	Nakagawa
JPH09237321A	3/4/1996	9/9/1997	Saito
US6094506	10/25/1995	7/25/2000	Hullender
JPH11203408A	1/13/1998	7/30/1999	Takatsugu
JPH08106513A	10/07/1994	4/23/1996	Naka
JPH1027217A	11/14/1996	1/27/1998	Yasumoto
JPH09114824A	10/19/1995	5/02/1997	Nishida
JPH0877295A	9/05/1994	3/22/1996	Gunji
JP2000123114A	10/15/1998	4/28/2000	Ono
JPH03135598A	10/20/1989	6/10/1991	Mizuno
JPH04155596A	10/19/1990	5/28/1992	Shimizu
JPH07160829A	12/09/1993	6/23/1995	Yamashita

B. Prior Art Systems

1. The ’671, ’486, ’291 Patents

System	Public Availability Date	Short Name
MI Talk	At least as early as 1987	MI Talk
Sproat	At least as early as 1998	The Bell Labs System
DecTalk	At least as early as 1987	DecTalk

C. Non-Patent Literature

1. The ’671, ’486, ’291 Patents

Title	Date of Publication	Short Name
Ellen Eide et al. *A Corpus-Based Approach to< ahem/> Expressive Speech Synthesis*, PROC. 5TH ISCA SPEECH SYNTHESIS WORKSHOP, 79 (2004)	June 2004	Eide (Corpus-Based)
Ellen Eide et al., *Recent improvements to the IBM trainable speech synthesis system*, 2003 IEEE INTERNATIONAL CONFERENCE ON ACOUSTICS, SPEECH, AND SIGNAL PROCESSING 1, 708 (2003)	April 2003	Eide (Recent Improvements)
Brendan S. Gillon, *Ambiguity, generality, and indeterminacy: Tests and definitions*, Synthese 85, 391–416 (1990)	Dec. 1990	Gillon
Laura D. Han, *Primary stress and intelligibility: Research to motivate the teaching of suprasegmentals*, 38 TESOL quarterly 2 (2004): 201-223.	June 2004	Han
Rene Collier, et al., *Language and Speech Generation*, 49 Philips Journal of Research 4 (1995) (419-437)	1995	Collier
Paul, Rhea, et al. *Production of syllable stress in speakers with autism spectrum disorders*, 2 Research in autism spectrum disorders 1 (2008) (110-124)	2008	Rhea
J. Kathryn Bock, et al., *Intonational marking of given and new information: Some consequences for comprehension*, 11 *Memory & Cognition* (1983) (64-76)	1983	Bock

Graeme Hirst, et al., *Correcting real-word spelling errors by restoring lexical cohesion*, 11 Natural Language Engineering 1 (2005) (87-111)	2005	Hirst
William E. Cooper, et al., *Acoustical aspects of contrastive stress in question–answer contexts*, 77 The Journal of the Acoustical Society of America 6 (1985) (2142-2156)	1985	Cooper
Julia Hirschberg, *Pitch Accent in Context Predicting Intonational Prominence from Text*, 63 ARTIFICIAL INTELLIGENCE 1-2, 305 (1993)	Oct. 1, 1993	Hirschberg Pitch Accent
E. Krahmer, M. Swerts, *On the Alleged Existence of Contrastive Accents*, 34 SPEECH COMMUNICATION 391-405 (2001)	2001	Krahmer
S. Pan, *Prosody Modeling in Concept-to-Speech Generation*, Columbia University (2002)	2002	Pan
P. Taylor, *Text-to-speech Synthesis*, Cambridge University Press (2009)	2009	Taylor
J.C. Wells, *Tonicity: Where Does The Nucleus Go?, in* English Intonation: An Introduction (2006)	2006	Wells
S. Bauman, M. Grice, *The Intonation Of Accessibility*, *in* Journal of Pragmatics 38 (2006) 1636–1657	2006	Bauman
M. Celik, *Teaching English Intonation to EFL/ESL Students*, The Internet TESL Jounral, Vol. VII, No. 12, (2001)	Dec. 2001	Celik
J. Pierrehumbert, J. Hirschberg, *The Meaning of Intonational Contours in the Interpretation of Discourse*, *in* INTENTIONS IN COMMUNICATION (1990)	1990	Pierrehumbert
V. Karaiskos, V, S. King, Clark, RAJ & Mayo, *The Blizzard Challenge 2008*, *in* Blizzard Challenge Workshop, The University of Edinburgh (2008)	2008	Karaiskos
S. Prevost, M. Steedman, *Specifying Intonation from Context for Speech Synthesis*, University of Pennsylvania School of Engineering and Applied Science, (1994)	July 1994	Prevost
M. Hasegawa-Johnson, S. Levinson, *Extraction of pragmatic and semantic salience from spontaneous spoken English, in* SPEECH COMMUNICATION (2006)	March 2006	Hasegawa-Johnson
Sridhar, V., Nenkova, A., Narayanan, S. & Jurafsky, D., *Detecting Prominence in Conversational Speech: Pitch Accent, Givenness*	2008	Sridhar

and Focus, 4th Conference on Speech Prosody (2008)		
Sasha Calhoun, et. al., *A Framework for Annotating Information Structure in Discourse*, Proceedings of the Workshop on Frontiers in Corpus Annotation II: Pie in the Sky, pp. 45-52 (2005)	2005	Calhoun
L. Badino, R. Clark, *Automatic labeling of contrastive word pairs form spontaneous spoken English*, *in* IEEE/ACL Workshop on Spoken Language Technology, pp.101-104 (2008)	2008	Badino, Automatic Labeling
J. Nivre et. al., *Maltparser: A Language-independent system for data-driven dependency parsing*, *in* Natural Language Engineering 13 (2): 95-135 (2007)	June 2007	Nivre
H. Zen et. al., *Details of Nitech HMM-Based Speech Synthesis System for the Blizzard Challenge 2005*, *in* IEICE TRANS. INF. & SYST, VOL E90-D NO. 1 (2007) pp. 325-333	Jan. 2007	Zen
K. Tokuda, H. Zen, A. Black, *An HMM-based Speech Synthesis System Applied to English*, *in* Proceedings of 2002 IEEE Workshop on Speech Synthesis (2002)	2002	Tokuda
L. Badino, A. Clark, V. Strom, *Including Pitch Accent Optionality in Unit Selection Tect-to-Speech Synthesis*, INTERSPEECH, 2118 (2008)	2008	Badino, Including Pitch Accent Optionality
Strom, V., Nenkova, A., Clark, R., Vazquez-Alvarez, Y., Brenier, J., King, S. and Jurafsky, D., *Modelling prominence and emphasis improves unit-selection synthesis,* INTERSPEECH, 1282 (2007)	2007	Strom
K. Tokuda, T. Kobayashi, S. Imai, S*peech parameter generation from HMM using dynamic features*, *International Conference on Acoustics, Speech, and Signal Processing* Vol. 1 (1995) pp. 660-663	1995	Tokuda, Speech Parameter Generation
J. Godfrey, E. Holliman, J. McDaniel, *SWITCHBOARD: Telephone Speech Corpus for Research and Development*, IEEE International Conference on Acoustics, Speech, and Signal Processing, Vol 1 (1992) pp. 517-520	1992	Godfrey
W. Hallahan, *DECtalk Software: Text-to-Speech Technology and Implementation*, Digital Technical Journal Vol. 7 No. 4 (1995)	1995	Hallahan

J. Davis, T. Trobaugh, *Direction Assistance*, Speech Research Group Technical Memo 1, The Media Laboratory, Massachusetts Institute of Technology (1987)	Dec. 1987	Davis, Direction Assistance
J. Davis, *A voice interface to a Direction giving program*, Speech Research Group Technical Memo 2, The Media Laboratory, Massachusetts Institute of Technology (1987)	Jan. 1987	Davis, A Voice Interface
J. Davis, J. Hirschberg, *Assigning Intonational Features in Synthesized Spoken Directions*, Proceedings of the 26th Annual Meeting of the Association for Computational Linguistics ACL, pp.187-193 (1988)	June 1988	Davis, Assigning Intonational Features
Olive, J. P., van Santen, J. P. H., M¨obius, B., and Shih, C. (1998). Synthesis. In Sproat, R. (Ed.), *Multilingual Text-To-Speech Synthesis: The Bell Labs Approach*, pp. 191–228. Kluwer, Dordrecht	1998	Olive
Jonathan Allen, M. Sharon Hunnicutt and Dennis Klatt (with Robert C. Armstrong and David Pisoni): *From Text to Speech: The MITalk System.* Cambridge (1987)	1987	Allen
Julia Hirschberg Hirschberg, *Using Discourse Context to Guide Pitch Accent Decisions in Synthetic Speech*, PROC. 1ST ISCA SPEECH SYNTHESIS WORKSHOP, 181 (1990)	Sept. 1990	Hirschberg Discourse Context
Dwight L. Bolinger, Contrastive Accent and Contrastive Stress, 37 LANGUAGE 1, 83 (1961)	1961	Bolinger

2. The ’334 Patent

Title	Date of Publication	Short Name
Toru Wakahara, et al., *On-line handwriting recognition*, 80, Proceedings of the IEEE 7 (1992) (1181-1194).	1992	Wakahara
Kazumi Odaka, et al., On-line recognition of handwritten characters by approximating each stroke with several points, 12 IEEE Transactions on Systems, Man, and Cybernetics 6 (Nov. 1982).	Nov. 1982	Odaka
T. Ohishi, et al., *Online signature verification using pen-position, pen-pressure and pen-inclination trajectories*, Proceedings 15th International Conference on Pattern Recognition. ICPR-2000 (Sept. 2000)	2000	Ohishi
Fevzi Alimoğlu, et al., *Combining multiple representations for pen-based handwritten digit recognition,* 9 Turkish Journal of Electrical Engineering and Computer Sciences 1 (2001) (1-12).	2001	Alimoğlu

Title	Date of Publication	Short Name
Kim, Seung-Gwon. A study of hand-written Chinese character recognition using machine learning (Thesis: University of New South Wales, 1998)	1998	Kim
P. Foggia, Definition and Validation of a Distance Measure Between Structural Primitives, 2 Pattern Analysis & Applications (1998) (215-227)	1999	Foggia
Yann LeCun, et al., Learning algorithms for classification: A comparison on handwritten digit recognition, 261 Neural networks: the statistical mechanics perspective 276 (1995)	1995	LeCun
Gyeonghwan Kim, et al., *An architecture for handwritten text recognition systems*, 2 International Journal on Document Analysis and Recognition (1999) (37-44)	1999	Kim-2
D. Inman, *Japanese handwriting recognition using AI techniques,* Proceedings VLSI and Computer Peripherals COMPEURO 89 (1989)	1989	Inman
Jianying Hu, *HMM based online handwriting recognition*, 18 IEEE Transactions on Pattern Analysis and Machine Intelligence 10 (1996) (1039-1045)	1996	Hu
Toru Wakahara, *On-Line Recognition Algorithms for Handwritten Chinese Characters and Hand-sketched Line Figures*, 6 ITE Technical Report 44 (1983) (43-48)	1983	Wakahara-2

Cerence Operating Company, Ex. 2004
Samsung Electronics Co., Ltd., etc. v. Cerence Operating Company, IPR2025-00459
Page 45 of 45