(19)Japan Patent Office (JP)

(12)JAPANESE UNEXAMINED PATENT APPLICATION PUBLICATION (A)

(11)Patent Application Publication No.

JP 2003-158672 A
(P2003-158672A)

(43)Publication Date: May 30, 2003 (Heisei 15)

(51) Int.Cl.[7]		Identification Code	FI			Theme code (Reference)
H04N	5/238		H04N	5/238	Z	2H002
G02B	7/28		G03B	7/16		2H011
	7/36			15/05		2H051
G03B	7/16			17/18	B	2H053
	13/36			17/20		2H102

Examination Request: Not yet Number of claims: 10 OL (8 claims total) Continued on last page

(21) Application No. JP 2001-355024 (P2001-355024)

(22) Application Date: November 20, 2001 (Heisei 13)

(71) Applicant000001007
Canon Inc.
3-30-2 Shimomaruko, Ota-ku, Tokyo-to

(72) Inventor Hiroshi Endo
c/o Canon Inc. 3-30-2 Shimomaruko, Ota-ku, Tokyo-to

(74) Agent 100090273
Patent Attorney Takayoshi Kokubun

Continued on last page

(54) [Title of Invention] IMAGING DEVICE, AND CORRECTION METHOD, PROGRAM, AND COMPUTER-READABLE STORAGE MEDIUM IN IMAGING DEVICE

(57) [Abstract]

[Problem] To favorably correct peripheral light amount of a photographed image to obtain a more natural image.

[Resolution Means] A flash ROM 18 provided on a flash 101 side which is detachable from a camera body stores data relating to a light distribution property of a flash, and the data is communicated to the camera body as necessary. In a CPU 7 of the camera body, based on focal length information and object distance information of a photographic lens 1 and data relating to the light distribution property of the flash 101, a correction coefficient is calculated and put out, and the correction coefficient is used by an ASIC 5 to perform brightness correction on the photographed image, whereby correction of an peripheral light amount of the photographed image is performed.

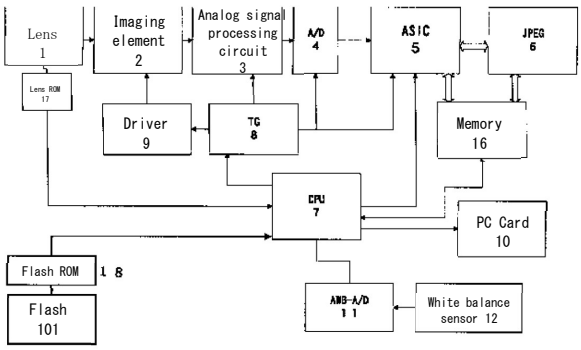

[Scope of Patent Claims]
[Claim 1] An imaging device comprising: an imaging device body comprising imaging means for converting a subject image into an electrical signal;
a photographic lens attached to the imaging device body; and
a flash integrated with or detachable from the imaging device body, wherein
the imaging device comprises storage means for storing information relating to a light distribution property of the flash, and
correction means for using the information relating to the light distribution property to correct a peripheral light amount of the photographed image.
[Claim 2] The imaging device according to claim 1, wherein the correction means use the information relating to the light distribution property as well as information relating to photography conditions to correct the peripheral light amount of the photographed image.
[Claim 3] The imaging device according to claim 2, wherein the information relating to the photography conditions is focal length information and object distance information.
[Claim 4] The imaging device according to claim 3, wherein the photographic lens comprises storage means for storing data regarding peripheral light amount falloff of the lens, and
the correction means use the data regarding peripheral light amount falloff of the lens to perform brightness correction of the photographed image.
[Claim 5] The imaging device according to claim 1, wherein the photographic lens comprises object distance detection means for detecting an object distance or a focus lens position corresponding to the object distance, and
the correction means perform correction on the peripheral light amount when a photographing distance is determined to be a short distance.
[Claim 6] The imaging device according to claim 1, wherein the flash is a zoom flash, and the storage means store information relating to the light distribution property for each focal length.
[Claim 7] The imaging device according to claim 1, wherein the correction means calculate a photographing field of view or photographing angle of view based on the focal length information and the object distance information, and use the photographing field of view information or photographing angle of view information and the information relating to the light distribution property of the flash to perform correction of the peripheral light amount of the photographed image.
[Claim 8] A correction method in an imaging device comprising an imaging device body having imaging means for converting a subject image into an electrical signal, a photographic lens attached to the imaging device body, and a flash integrated with or detachable from the imaging device body, the method comprising
a correction procedure for using information relating to the light distribution property of the flash stored in the storage means to correct a peripheral light amount of the photographed image.
[Claim 9] A program for performing correction processing in an imaging device comprising an imaging device body having imaging means for converting a subject image into an electrical signal, a photographic lens attached to the imaging device body, and a flash integrated with or detachable from the imaging device body, wherein
the program executes correction processing for using information relating to the light distribution property of the flash stored in the storage means to correct a peripheral light amount of the photographed image.
[Claim 10] A computer-readable storage medium storing the program according to claim 9.
[Detailed Description of Invention]
[0001]
[Technical Field of Invention] The present invention relates to an imaging device such as a digital still camera or video camera provided with a photographic lens and a flash integrated with or detachable from the imaging device body, and a correction method, program, and computer-readable storage medium in the imaging device.
[0002]
[Conventional Art] Conventionally, a device for correcting illumination nonuniformity and a peripheral light amount falloff of a photographed image by illumination of an artificial light source, is taught in JP 2000-59653 A, JP H11-331575 A, and the like.
[0003] JP 2000-59653 A discloses art in which, when illuminating a subject by artificial light and photographing, a test plate having a constant reflectance is pre-photographed, illumination nonuniformity due to artificial light is stored, then real photography is performed and illumination nonuniformity of the photographed image is corrected.
[0004] Furthermore, JP H11-331575 A above discloses art relating to a digital laboratory system, wherein, when printing a silver halide film photographed using a flash, a main subject and a background are separated, and correction of the light distribution property of the flash are performed on the main subject and the background so as to eliminate discomfort due to a difference in an amount of light between the main subject and the background.
[0005]
[Problem to be Solved by Invention] When photographing using a flash, the light distribution property of the flash may cause a periphery of the photographed image to be darker than a center, which may result in an unnatural image.
[0006] Moreover, not only the light distribution property but also the photography conditions may result in an unnatural image. For example, in a scene where the main subject is in the front and a background is in the back, the illumination by the flash light weakens in proportion to the square of the distance from the light source, so illumination nonuniformity occurs not only due to the light distribution property but also due to the distance.
[0007] Furthermore, even when the light distribution property of the flash is fixed, when the focal length of the photographic lens changes, the peripheral light amount falloff of the photographed image changes.
[0008] Furthermore, particularly in an inner focus type photographic lens, a photographing angle of view changes depending on the object distance, which causes changes in the peripheral light amount falloff in the photographed image. Moreover, due to distortion of each photographic lens as well, the photographing angle of view changes and the peripheral light amount falloff changes.
[0009] The present invention has been made in view

of the above points, and has an object to use information such as the light distribution property of the flash and the focal length and object distance of the photographic lens to perform brightness correction of the photographed image and obtain a natural image, even when the photographic lens is replaced or when the flash is replaced.

[0010]

[Means For Solving Problem] An imaging device of the present invention is provided with an imaging device body having imaging means for converting a subject image into an electrical signal, a photographic lens attached to the imaging device body, and a flash integrated with or detachable from the imaging device body, the imaging device having a characteristic of being provided with storage means for storing information relating to a light distribution property of the flash, and correction means for using the information relating to the light distribution property to correct a peripheral light amount of the photographed image.

[0011] Furthermore, another characteristic of the imaging device of the present invention is that the correction means use the information relating to the light distribution property as well as information relating to photography conditions to correct the peripheral light amount of the photographed image.

[0012] Furthermore, another characteristic of the imaging device of the present invention is that the information relating to the photography conditions is focal length information and object distance information.

[0013] Furthermore, another characteristic of the imaging device of the present invention is that the photographic lens has storage means for storing data regarding peripheral light amount falloff of the lens, and the correction means use the data regarding peripheral light amount falloff of the lens to perform brightness correction of the photographed image.

[0014] Furthermore, another characteristic of the imaging device of the present invention is that the photographic lens has object distance detection means for detecting an object distance or a focus lens position corresponding to the object distance, and the correction means perform correction on the peripheral light amount when a photographing distance is determined to be a short distance.

[0015] Furthermore, another characteristic of the imaging device of the present invention is that the flash is a zoom flash, and the storage means store information relating to the light distribution property for each focal length.

[0016] Furthermore, another characteristic of the imaging device of the present invention is that the correction means calculate a photographing field of view or photographing angle of view based on the focal length information and the object distance information, and use the photographing field of view information or photographing angle of view information and the information relating to the light distribution property of the flash to perform correction of the peripheral light amount of the photographed image.

[0017] A correction method in the imaging device of the present invention is a correction method in an imaging device provided with an imaging device body having imaging means for converting a subject image into an electrical signal, a photographic lens attached to the imaging device body, and a flash integrated with or detachable from the imaging device body, and has a characteristic of having a correction procedure for using information relating to the light distribution property of the flash stored in the storage means to correct a peripheral light amount of the photographed image.

[0018] A program of the present invention is a program for performing correction processing in an imaging device provided with an imaging device body having imaging means for converting a subject image into an electrical signal, a photographic lens attached to the imaging device body, and a flash integrated with or detachable from the imaging device body, and has a characteristic of executing correction processing for using information relating to the light distribution property of the flash stored in the storage means to correct a peripheral light amount of the photographed image.

[0019] A computer-readable storage medium of the present invention has a characteristic of storing the above program.

[0020]

[Embodiments of Invention] Embodiments of an imaging device of the present invention, and a correction method, program, and computer-readable storage medium in the imaging device will be described below with reference to drawings.

[0021] FIG. 1 is a block diagram illustrating a configuration of a digital still camera which is an imaging device of the present embodiment. In the figure, 1 is a photographic lens that is detachable from a camera body and has means for detecting information regarding a focal length and object distance of the lens. Specifically, as an example, a zoom encoder and/or a non-focus encoder is had that is configured by a flexible cable having an electric pattern and an electric contact that moves while sliding relative to the flexible cable. A lens ROM 17 provided on the photographic lens 1 side stores various data related to a property of the lens, for example, sensitivity of a focus lens, peripheral light amount falloff, exit pupil, distortion, and the like, and has a function for communicating information related to photography conditions, for example, information such as the focal length and object distance, to the camera body.

[0022] Furthermore, 101 is a flash which is made detachable from the camera body. The flash ROM 18 provided on the flash 101 side stores data relating to a light distribution property of the flash, and the data is communicated to the camera body as necessary. Particularly in the case of a zoom flash, the above data is stored for each focal length as discrete data or as coefficients of a function related to the focal length.

[0023] Next, when the configuration in the camera body is described, 2 is an imaging element for converting a subject image incident through the photographic lens 1 into an electrical signal. 3 is an analog signal processing circuit, and includes an AGC circuit and CDS circuit. 4 is an A/D converter which makes an analog image signal to be a digital image signal. 5 is an ASIC that functions as an image processing circuit. 6 is a format processing unit for performing the format processing for JPEG compression.

[0024] 7 is a CPU for performing control and the like of the entire imaging device. 8 is a timing generator (TG) for generating a timing signal. 9 is a driver for driving the imaging element 2. 10 is a storage

medium such as a PC card. 11 is an A/D converter (AWB-A/D) that makes an analog signal from a white balance sensor 12 to be a digital signal. 12 is a white balance sensor which is a color temperature sensor. 16 is a memory.

[0025] The CPU 7 drives the imaging element 2 via the timing generator 8 and the driver 9 in conjunction with an operation release button, not illustrated, and causes the flash 101 to emit light in accordance with subject conditions or camera settings. Furthermore, the analog signal processing circuit 3 and the A/D converter 4 are controlled by the timing generator 8.

[0026] Moreover, white balance detection processing is started by a signal from the CPU 7. That is, an analog color temperature signal output from the white balance sensor 12 is made to be a digital color temperature signal by the A/D converter 11, and the CPU 7 generates a white balance correction signal based on the digital color temperature. The white balance sensor 12 consists of, for example, a plurality of photoelectric conversion elements having sensitivity to, respectively, red R, blue B, and green G, and estimates light source color temperature by extracting a partial white, making an average light of all pixels to be achromatic color, and the like. The CPU 7 puts out an R gain and B gain based on outputs of the plurality of photoelectric conversion elements. Note that although the white balance sensor 12 in FIG. 1 is a dedicated sensor, it may also serve as the imaging element 2.

[0027] Subject light from the photographic lens 1 is formed on a light receiving surface of the imaging element 2, and a signal charge corresponding to a brightness of the subject image is accumulated in the imaging element 2. The signal charge accumulated in the imaging element 2 is discharged by the driver 9 and input to the analog signal processing circuit 3. In the analog signal processing circuit 3, analog processing such as gain control and normal mode rejection is applied to the analog image signal, and then the analog image signal is converted into a digital image signal by the A/D converter 4. The digitally converted image signal is fed to the ASIC 5 where image pre-processing such as white balance adjustment and gamma correction is performed.

[0028] Format processing for JPEG compression is further performed by the format processing unit 6 on the image data on which image pre-processing performed, and then the image data is temporarily stored in the buffer memory 16. Finally, the data is compressed at a predetermined ratio using the JPEG format and recorded in the storage medium 10 such as a flash memory.

[0029] FIG. 2 illustrates a functional configuration of the ASIC 5. A gain circuit 13 applies a predetermined gain uniformly to each of the R, G, and B signals output from the imaging element 2 in a dot-sequential manner for each line with respect to the output of the image sensor 2, and also performs correction for variations in the sensitivity of the image sensor 2 on the G signal, and further performs correction for variations in the sensitivity ratio of the image sensor 2 on the R and B signals.

[0030] In the present embodiment, as described later, the CPU 7 calculates and puts out a correction coefficient based on data relating to the focal length information and object distance information of the photographic lens 1 and the light distribution property of the flash 101, and uses the correction coefficient to perform brightness correction on the photographed image.

[0031] A white balance circuit 14 adds the R gain and B gain, which are white balance adjustment coefficients determined in advance and stored in the CPU 7, to the R and B signals in a dot-sequential manner for each line with respect to the output of the imaging element 2.

[0032] A γ correction circuit 15 performs γ correction using a gradation look-up table in a dot-sequential manner for each line with respect to the output of the imaging element 2.

[0033] FIG. 3 is an example of a property diagram illustrating the light distribution property of the flash, where the radial direction indicates illumination. The left side of the figure indicates the illumination in the vertical direction and the right side indicates the illumination in the horizontal direction. Generally, the flash is designed to target a bright guide number and a uniform light distribution property.

[0034] FIG. 4 is a diagram for describing a relationship between the photographing distance and illumination, where P is a light source such as a flash, O is an object plane, O0, O0 are positions on the object plane O, R0, and R1 are distances from the light source P to the positions O0, O1. Generally, illumination decreases in proportion to the square of the distance, the relationship between illuminations I0, I1 at positions O0, O1 is:

$I1 = I0 \times (R0/R1)^2$... (1)

. FIG. 5 shows the relationship between positions O0, O1 on the object plane O and illuminations I0, I1.

[0035] FIG. 6 is an example of a property diagram illustrating the peripheral light amount falloff of the photographic lens, where the horizontal axis shows the distance so-called image height from a photography screen center, and the vertical axis shows an amount of light. As illustrated in the figure, the amount of light is reduced at the periphery compared to the screen central area.

[0036] FIG. 7 is a cross-sectional view of a lens illustrating a state in which the photographing angle of view changes according to a change in focal length, where (a) is a wide angle end, (b) is an intermediate focal length, (c) shows the state at the telephoto end.

[0037] Table 1 below shows a relationship between the photographing distance and the focal length. The present lens is a so-called inner focus type zoom lens for moving a second lens group when focusing, where the focal length of the lens changes depending on the photographing distance, and, particularly at the telephoto end (see FIG. 7(c)), because the focal length becomes short at a close distance, the photographing magnification is not increased as compared to a fully extending lens.

[0038]

[Table 1]

f			
inf	5m	3m	1m
24.8	24.7	24.6	24.2
53.2	52.3	51.7	48.9
101.8	96.1	92.8	80.2

[0039] Furthermore, Table 2 below shows a relationship between the photographing distance and the photographing angle of view.

[0040]

[Table 2]

ω			
f	5m	3m	1m
24.8	42.7	42.8	43.3
53.2	21.5	21.7	22.4
101.8	12.0	12.2	13.4

[0041] Furthermore, Table 3 below shows a relationship between the photographing distance and the photographing magnification.

[0042]

[Table 3]

β			
f	5m	3m	1m
24.8	−0.005	−0.008	−0.027
53.2	−0.011	−0.018	−0.055
101.8	−0.020	−0.033	−0.093

[0043] Furthermore, Table 4 below shows a relationship between the photographing distance and the photographing field of view. The photographing field of view may be found from the photographing magnification and distortion.

[0044]

[Table 4]

Short side × long side			
f	5m	3m	1m
24.8	4759×7139	2827×4240	894×1340
53.2	2245×3368	1342×2013	438×657
101.8	1208×1812	735×1102	257×386

[0045] Next, correction of peripheral light amount will be described. The CPU 7 in the camera body calculates a correction coefficient based on data relating to the focal length information and object distance information transmitted from the lens ROM 17 of the photographic lens 1, as well as peripheral light amount falloff information of the lens and the light distribution property transmitted from the flash ROM 18 of the flash 101, then the correction coefficient is fed to an image processing circuit configured as the ASIC 5, and brightness correction is performed on the photographed image.

[0046] The above object distance information is particularly useful for a lens such as an inner focus lens, whose photographing angle of view changes depending on the photographing distance, and by converting the photographing angle of view into the focal length according to the object distance and using information relating to the light distribution property of the flash according to the converted focal length, it is possible to perform favorable brightness correction.

[0047] As a method of brightness correction, the photographing field of view or photographing angle of view is calculated from the focal length information, the object distance information, and the size of the imaging element 2, and a brightness correction amount is determined from this information and data relating to the light distribution property of the flash. The above photographing field of view may be stored in the lens ROM 17 as a table according to the focal length and the object distance.

[0048] Furthermore, when the subject is at a close distance in photography using the flash, there are many scenes in which the peripheral light amount falloff particularly stands out, so it is also possible to configure to equip the photographic lens with object distance detection means and perform correction of the peripheral light amount when it is determined that the photographing distance is a close distance.

[0049] Moreover, when the subject is at a close distance and is a planar object such as a bulletin board, an illumination falloff due to the distance from the light source becomes noticeable, as shown in FIGS. 4 and 5. For this reason, it is desirable to also correct the illumination falloff due to the distance from the light source using the object distance information and photographing field of view information.

[0050] In addition, it is also possible to provide a function such as displaying a warning mark in the viewfinder of the camera when the photographing angle of view exceeds an illumination angle of the flash.

[0051] (Other Embodiments) The scope of the present invention also includes implementations in which a program code of software for achieving the functions of the above embodiment is supplied to a computer in a device or system connected to various devices so as to operate the various devices to achieve the functions of the above embodiment, and the various devices are operated in accordance with the program stored in the computer (CPU or MPU) of the system or device.

[0052] Furthermore, in this case, the program code of the software itself achieves the functions of the above embodiment, and the program code itself configures the present invention. As a transmission medium of the program code, a communication medium (a wired line such as optical fiber, a wireless line, or the like) in a computer network (a LAN, a WAN such as the Internet, a wireless communication network, or the like) system for propagating program information as a carrier wave then supplying such may be used.

[0053] Moreover, means for supplying the above program code to a computer, for example, a recording medium storing such program code, configures the present invention. As a recording medium storing such program code, for example, floppy disks, hard disks, optical disks, magneto-optical disks, CD-ROMs, magnetic tapes, non-volatile memory cards, and ROMs, and the like may be used.

[0054] Furthermore, by executing the program code supplied by the computer, not only are the functions of the above embodiment achieved, but it goes without saying that such program code is also included in the embodiments of the present invention when the functions of the above embodiment are achieved in cooperation with an OS (operating system) or other application software running on a computer.

[0055] Moreover, it goes without saying that the present invention also includes cases where the supplied program code is stored in a memory provided on a function expansion board of a computer or a function expansion unit connected to a computer, and then a CPU or the like provided on the function expansion board or function expansion unit performs some or all of the actual processing based on instructions of the program code, and the functions of the above embodiment are achieved through by processing.

[0056] Note that, the shapes and structures of each unit indicated in the above embodiment are merely an example of a concrete embodiment for implementing the present invention, and the technical scope of the present invention should not be interpreted in a limited manner based on these. That is, the present invention may be implemented in various forms without departing from the spirit or main characteristics thereof. For example, in the above embodiment, the

flash 101 is detachable from the camera body, but when integrated with the camera body, a ROM or the like for storing data relating to the light distribution property may be provided in the camera body.

[0057]

[Effect of Invention] As described above, according to the present invention, it is possible to obtain a more natural image by favorably correcting a peripheral light amount in a photographed image using a light distribution property of a flash as well as information relating to photography conditions such as focal length information and object distance information.

[Brief Description of Drawings]

[FIG. 1] A block diagram illustrating a schematic configuration of an imaging device of the present embodiment.

[FIG. 2] A block diagram illustrating a functional configuration of an ASIC 5.

[FIG. 3] A property diagram illustrating a light distribution property of a flash.

[FIG. 4] A diagram for describing a relationship between photographing distance and illumination.

[FIG. 5] A diagram showing a relationship between positions O0, O1 on the object plane O and illuminations I0, I1.

[FIG. 6] A property diagram illustrating peripheral light amount falloff of a photographic lens.

[FIG. 7] A lens cross-sectional view illustrating a state in which a photographing angle of view changes according to a change in focal length.

[Description of Reference Numerals]

101	Flash
1	Photographic lens
2	Imaging element
3	Analog signal processing circuit
4	A/D converter
5	ASIC
6	Format processing unit
7	CPU
8	Timing generator
9	Driver
10	Storage medium
11	A/D converter
12	White balance sensor
13	Gain circuit
14	White balance circuit
15	γ correction circuit
16	Memory
17	Lens ROM
18	Flash ROM

[FIG. 1]

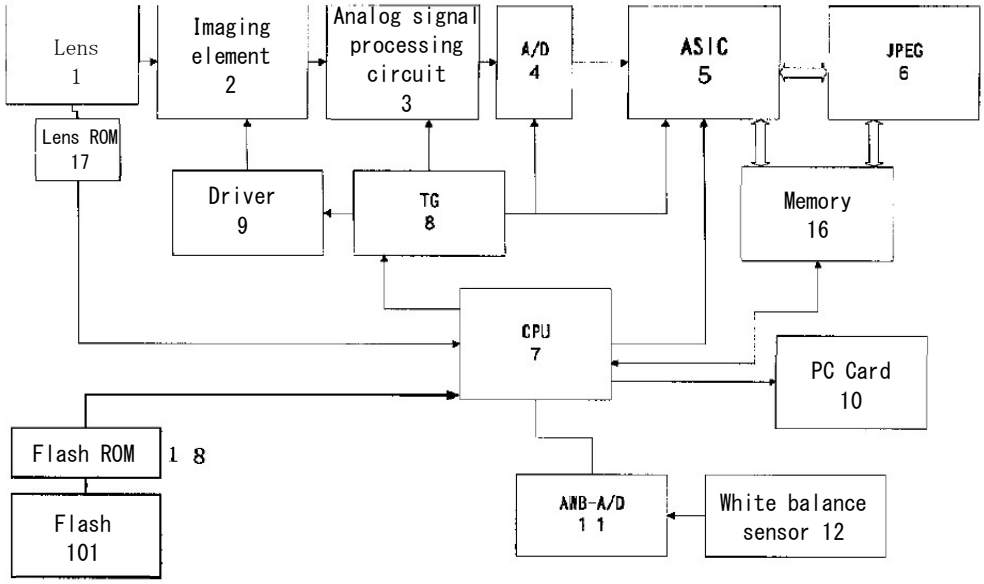

[FIG. 5]

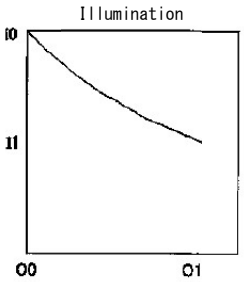

[FIG. 2]

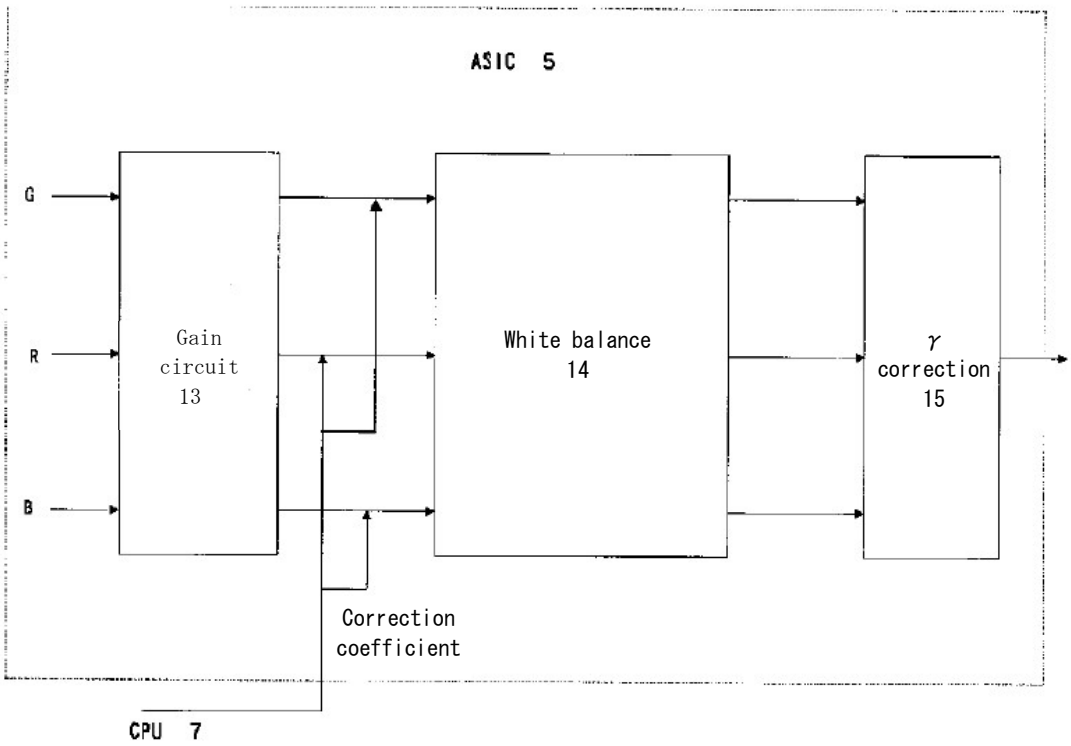

[FIG. 3]

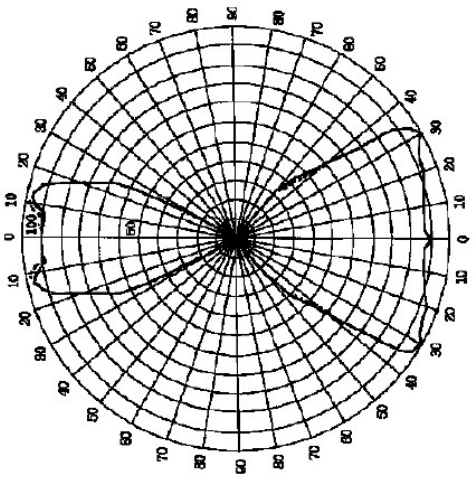

[FIG. 4]

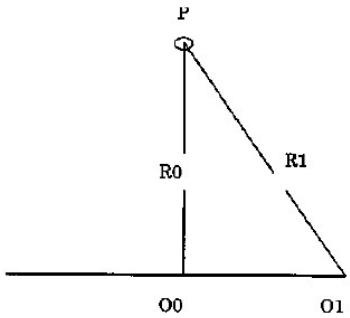

[FIG. 6]

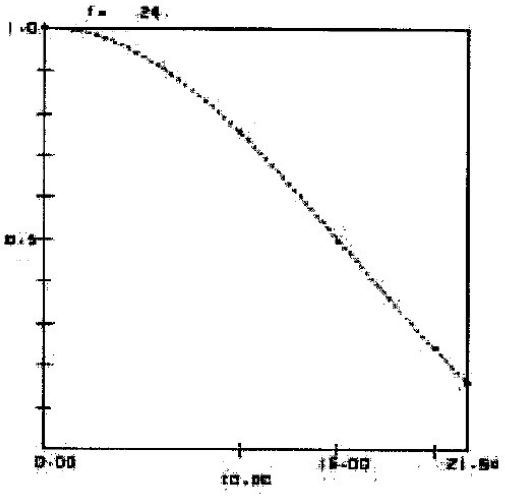

[FIG. 7]

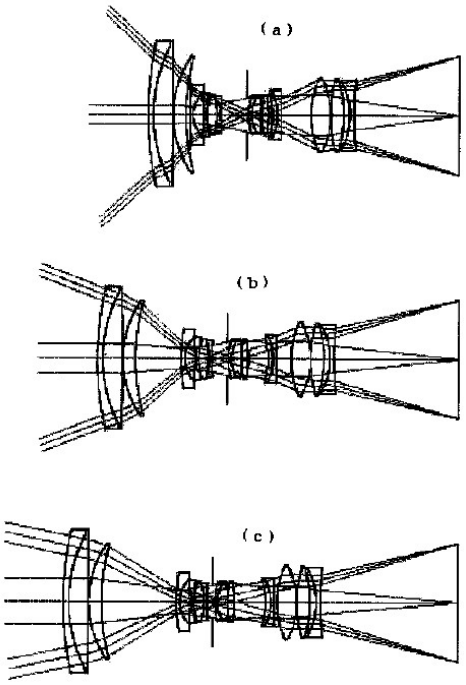

Continued from front page

(51) Int.Cl.[7]		Identification Code	FI			Theme code (Reference)
G03B	15/05		G02B	7/11	D	5C022
	17/18				K	
	17/20		G03B	3/00	A	

F-term (Reference)

2H002 EB00 EB09 FB38 FB58 FB64 GA55 GA75
2H011 BA31 DA07
2H051 AA08 BA41 EB07
2H053 BA72 BA75 BA76 CA13 CA21 CA44
2H102 AA41 AB13 BA17 BB01 CA11
5C022 AA13 AB15 AB21 AC42 AC54 AC69 AC77

July 30, 2024

Certification

Welocalize Translations

TRANSLATOR'S DECLARATION:

I, David Takata, am fluent in both the Japanese and English languages. I have translated the application JP2003-158672A from Japanese to English. I hereby certify that the translation is accurate and complete to the best of my judgment and ability. I understand that willful false statements and the like are punishable by fine or imprisonment, or both, pursuant to 18 U.S.C. § 1001.

I certify under penalty of perjury under the laws of the United States of America that the foregoing is true and correct.

David Takata

David Takata

Project Number: JODAY_2407_P0058

15 W. 37th Street 4th Floor
New York, NY 10018
212.581.8870