(19) Japan Patent Office (JP)

(12) JAPANESE UNEXAMINED PATENT APPLICATION PUBLICATION (A)

(11) Patent Application Publication No. JP H6-113309A

(43) Publication Date: April 22, 1994 (Heisei 6)

(51) Int. Cl.[6]	Ident. Code	Internal Ref. No.	FI	Technical Indication Location
H 0 4 N 9/04	B	8943−5C		

Examination Request: Not Yet Total No. of Claims: 3 (Total 4 pages)

(21) Application No. JP H4-282493

(22) Date of Filing September 28, 1992 (Heisei 4)

(71) Applicant 000002185
Sony Corporation
6-7-35 Kita-Shinagawa, Shinagawa ku, Tokyo

(72) Inventor Seijiro Ito
c/o Sony Corporation
6-7-35 Kita-Shinagawa, Shinagawa ku, Tokyo

(72) Inventor Osamu Kuno
c/o Sony Corporation
6-7-35 Kita-Shinagawa, Shinagawa ku, Tokyo

(72) Inventor Nobumoto Momochi
c/o Sony Corporation
6-7-35 Kita-Shinagawa, Shinagawa ku, Tokyo

(74) Agent Patent Attorney Akira Koike (2 others)

(54) [Title of Invention] DIGITAL VIDEO CAMERA

(57) [Abstract]
[Configuration] Provided are: an optical lens system 1 for forming an optical image of a captured subject; an imaging system 2 and decomposition circuit 3 for imaging the incident image that is from the optical lens system and outputting RGB signals; correction circuits 4R, 4G, 4B for correcting the chromatic aberration of the RGB signals by using focal-length correction values that are according to the chromatic aberration that is inherent to the optical lens system 1; and a synthesis circuit 5 for synthesizing the RGB outputs, the chromatic aberration in said outputs having been corrected, and outputting an image signal in which chromatic aberration has been corrected.
[Effect] An image with no chromatic aberration can be obtained even if a small, lightweight, and inexpensive optical lens system is used.

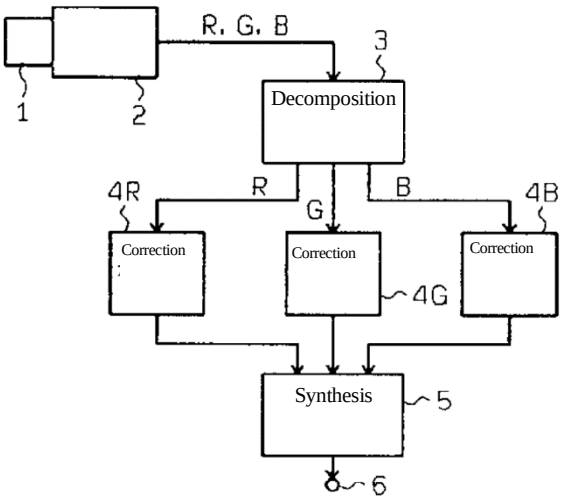

[Claims]
[Claim 1] A digital video camera comprising: imaging means for imaging an incident image that is from an optical lens system and outputting RGB signals; correction means for correcting the chromatic aberration of the RGB signals from the imaging means by using predetermined chromatic-aberration correction values; and synthesis means for synthesizing the RGB outputs from the correction means, the chromatic aberration in said outputs having been corrected, and outputting an image signal in which chromatic aberration has been corrected.
[Claim 2] The digital video camera of claim 1, wherein focal-length correction values according to the chromatic aberration that is inherent to the optical lens system are set as the predetermined chromatic-aberration correction values in the correction means.
[Claim 3] The digital video camera of claim 1, wherein: the digital video camera comprises storage means for storing an image signal; the RGB signals from the imaging means are written in the storage means and then individually read; the RGB signals that are read from the storage means are corrected by the correction means; and an image signal, in which chromatic aberration has been corrected, that is obtained by using the synthesis means to synthesize the RGB outputs from the correction means, the chromatic aberration in said outputs having been corrected, is again written in the storage means and then read.
[Detailed description of invention]
[0001]
[Industrial applicability] The present invention relates to a digital video camera for converting an incident image, obtained by means of an optical lens system, into an electrical signal by an imaging element.
[0002]
[Background] So-called chromatic aberration, which occurs due to the refractive index of glass or the like changing according to optical wavelength, is normally found in an optical lens system of, for example, a digital video camera for imaging an incident image by an imaging element.
[0003] Chromatic aberration includes so-called longitudinal chromatic aberration, wherein the position of an image changes according to wavelength, and chromatic aberration of magnification, wherein the size of an image changes according to wavelength. Chromatic aberration wherein both longitudinal chromatic aberration and chromatic aberration of magnification appear on the same image plane is so-called transverse chromatic aberration. Chromatic aberration causes loss of sharpness in an image and image coloring.
[0004]
[Problem to be solved by invention] Conventional digital video cameras have a disadvantage wherein the above optical lens system is large and heavy due to attempts to remove chromatic aberration by improving the lenses constituting the optical lens system.
[0005] Completely eliminating chromatic aberration is difficult, and there are problems such as needing expensive lenses such as aspheric lenses.
[0006] The purpose of the present invention is to provide a digital video camera by which an image with no chromatic aberration can be obtained even if a small, lightweight, and inexpensive optical lens system is used.
[0007]
[Means for solving problem] The digital video camera of the present invention is proposed to achieve the above purpose and comprises: imaging means for imaging an incident image that is from an optical lens system and outputting RGB signals; correction means for correcting the chromatic aberration of the RGB signals from the imaging means by using predetermined chromatic-aberration correction values; and synthesis means for synthesizing the RGB outputs from the correction means, the chromatic aberration in said outputs having been corrected, and outputting an image signal in which chromatic aberration has been corrected.
[0008] Focal-length correction values according to the chromatic aberration that is inherent to the optical lens system are set as the predetermined chromatic-aberration correction values in the correction means.
[0009] The digital video camera of the present invention is also configured so: the digital video camera comprises storage means for storing an image signal; the RGB signals from the imaging means are written in the storage means and then individually read; the RGB signals that are read from the storage means are corrected by the correction means; and an image signal, in which chromatic aberration has been corrected, that is obtained by using the synthesis means to synthesize the RGB outputs from the correction means, the chromatic aberration in said outputs having been corrected, is again written in the storage means and then read.
[0010]
[Actions] According to the digital video camera of the present invention, focal-length correction values according to the chromatic aberration that is inherent to an optical lens system are found in advance and held as chromatic-aberration correction values, and the chromatic-aberration correction values are used to correct individual RGB signals that are obtained by imaging by means of the optical lens system.
[0011]
[Examples] Examples of the digital video camera of the present invention are described below with reference to the drawings.
[0012] The schematic configuration of the digital video camera of an example of the present invention is shown in fig. 1. The digital video camera of the present example comprises: an optical lens system 1 for forming an optical image of a captured subject; an imaging system 2 and decomposition circuit 3 as imaging means for imaging the incident image that is from the optical lens system and outputting RGB signals, the imaging system 2 outputting an imaging signal that is the result of imaging the incident image that is from the optical lens system 1, the decomposition circuit 3 decomposing the image signal from the imaging system 2 into the RGB signals; correction circuits 4R, 4G, 4B for correcting the chromatic aberration of the RGB signals from the decomposition circuit 3 by using predetermined chromatic-aberration correction values; and a synthesis circuit 5 for synthesizing the RGB outputs from the correction circuits 4R, 4G, 4B, the chromatic aberration in said outputs having been corrected, and outputting an image signal in which chromatic aberration has been corrected.
[0013] In the correction circuits 4R, 4G, 4B, focal-length correction values according to the chromatic aberration that is inherent to the optical lens system 1 are set as the

predetermined chromatic-aberration correction values.

[0014] In other words, in fig. 1, an image is formed on an imaging element, such as a CCD, of the imaging system 2 by light rays from the captured subject, the image formation being by means of the optical lens system 1, which is composed of, for example, a zoom lens. An imaging signal (RGB signal) that is obtained by imaging by the CCD is output from the imaging system 2. The RGB signal from the imaging system 2 is separated into each color by the decomposition circuit 3. The RGB signals from the decomposition circuit 3 are sent to the corresponding correction circuits 4R, 4G, 4B.

[0015] The focal-length correction values, which correspond to the image magnifications according to color of the optical lens system 1, are stored in advance in the correction circuits 4R, 4G, 4B for R, G, and B. Focal-length correction for each color is performed by digital signal processing in which the focal-length correction values are used. Specifically, one color among R, G, and B (for example, G) is used as the standard, and the image is corrected by being enlarged or reduced with respect to the other colors (R, B). In other words, the optical lens system 1 of the present example, which is composed of a zoom lens, is designed so, for example, only G (green) wavelengths are focused on the CCD. When only the green wavelengths are focused, the other red and blue wavelengths have different magnifications due to the lens system being a zoom lens. Therefore, in the present example, the focal lengths are corrected by enlarging or reducing by digital signal processing in the correction circuits (correction circuits 4R, 4B).

[0016] The color that is the standard is not limited to G and may be R or B. However, when the standard in the optical lens system 1 is R or B, only R or B wavelengths are focused on the CCD.

[0017] A fast Fourier transform can be used as the chromatic-aberration correction that is by digital signal processing.

[0018] In the present invention, chromatic aberration can also be corrected by subjecting each color to a fast Fourier transform, instead of using one color as the standard and correcting the focal lengths of the other colors as in the example described above.

[0019] The signals that have been subjected to chromatic-aberration correction are sent to the synthesis circuit 5 by the correction circuits 4R, 4G, 4B described above. In the synthesis circuit 5, the corrected RGB signals are synthesized, a color image signal is created, and the image signal is output from an output terminal 6.

[0020] As above, in the digital video camera of the present example, an image with no chromatic aberration is obtained by using digital signal processing that is by a fast Fourier transform to correct, for each color, the chromatic aberration that occurs in the optical lens system 1 (for example, correcting chromatic aberration of magnification by enlarging or reducing each color). Therefore, according to the present example, no considerations need to be made for chromatic aberration when designing the optical lens system 1, and a small, lightweight, and inexpensive lens system can be easily produced. Moreover, an image with no chromatic aberration whatsoever can be obtained.

[0021] As another example of the digital video camera of the present invention, the configuration shown in fig. 2 can also be adopted. In fig. 2, components that are the same as the components in fig. 1 are labeled with the same reference signs. In the digital video camera shown in fig. 2, an image memory 10 for storing image data is provided, and the operations of the decomposition circuit 3 in fig. 1 are made to be performed by the image memory 10.

[0022] In other words, in fig. 2, the RGB signals from the imaging system 2 are written in the image memory 10, and address control is then used to individually read the RGB signals. The image memory 10 thus operates in the same manner as the decomposition circuit 3 in fig. 1.

[0023] Next, the RGB signals that are read from the image memory 10 are corrected in the same manner as above by the correction circuits 4R, 4G, 4B. The corrected signals are then synthesized in the synthesis circuit 5, and the synthesized signal is sent back to the image memory 10.

[0024] The image memory 10 that is supplied with the image signal from the synthesis circuit 5 is read upon the image signal being written again. Afterward, the image signal from the image memory 10 is subjected to predetermined signal processing such as white-balance adjustment, edge enhancement, and γ correction. The image signal is then subjected to digital/analog conversion by a D/A conversion circuit 11 and displayed on a monitor 12.

[0025]

[Effect of invention] As above, in the digital video camera of the present invention, RGB signals that are obtained by imaging an incident image that is from an optical lens system are subjected to chromatic-aberration correction (focal-length correction) by using, as chromatic-aberration correction values, focal-length correction values that are according to the inherent chromatic aberration of the optical lens system, and the outputs are then synthesized. An image with no chromatic aberration can thus be obtained even if a small, lightweight, and inexpensive optical lens system is used.

[Brief description of drawings]

[Fig. 1] A diagram showing the schematic configuration of a digital video camera of an example of the present invention.

[Fig. 2] A diagram showing the schematic configuration of the digital video camera in another example.

[Reference signs list]

1 ... optical lens system
2 ... imaging system
3 ... decomposition circuit
4R, 4G, 4B ... correction circuit
5 ... synthesis circuit
10 ... image memory
11 ... D/A conversion circuit
12 ... monitor

[FIG. 1]

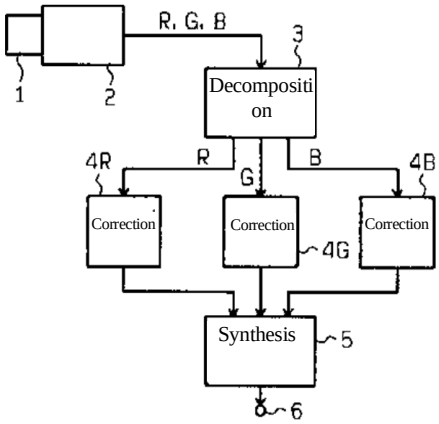
R, G, B
3
1
2
Decomposition
4R
R
G
B
4B
Correction
Correction
Correction
4G
Synthesis
5
6

[FIG. 2]

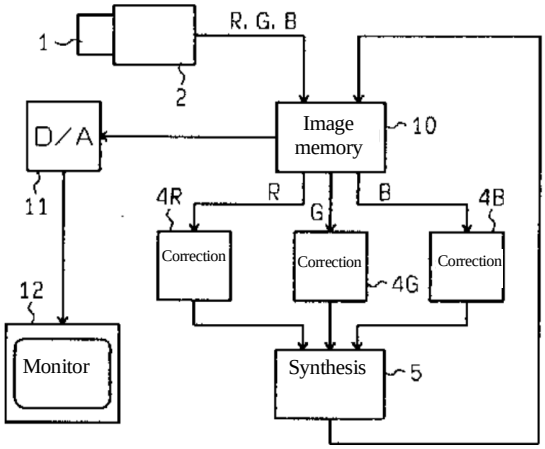
1
R, G, B
2
D/A
Image memory
10
11
4R
R
G
B
4B
Correction
Correction
Correction
4G
12
Monitor
Synthesis
5

CONSORTRA
TRANSLATIONS

100 Park Avenue, 16th Fl
New York, NY 10017
www.consortra.com

STATE of TEXAS)
) ss:
COUNTY of HARRIS)

CERTIFICATE OF ACCURACY

This is to certify that the attached document, "JP1994-113309 - Itoh"-- originally written in *Japanese* -- is, to the best of our knowledge and belief, a true, accurate, and complete translation into *English*.

Dated: 7/11/2024

Susannah Smith
Susannah Smith
Project Manager
Consortra Translations

Sworn to and signed before ME
This 11th day of July, 2024

Jeffrey Mamera
Notary Public

JEFFREY MAMERA
Notary Public, State of Texas
Comm. Expires 12-07-2026
Notary ID 134094816

Your legal translation partner