(19) Japan Patent Office (JP)

(12) **Unexamined Patent Publication (A)**

(11) Patent Application Publication No.

JPH11-205652

(43) Publication date: July 30, 1999

(51) Int. Cl.[6]	Identification symbol	FI	
H04N 5/225		H04N 5/225	Z
G06T 3/00		5/335	P
H04N 1/40		17/00	K
5/335		G06F 15/66	360
17/00		H04N 1/40	101Z

Request for examination: Unrequested Number of claims: 7 FD (8 pages in total)

(21) Application No. H10-22810

(22) Application date: January 19, 1998

(71) Applicant 597073450
Yoshikazu Ichiyama
35-1 Saga Shakado Monzen,
Urayanagicho, Ukyo-ku, Kyoto

(72) Inventor: Yoshikazu Ichiyama
35-1 Saga Shakado Monzen,
Urayanagicho, Ukyo-ku, Kyoto

(54) [Title of the invention]

(57) [Abstract]

[Problem to be solved] Remedying aberrations such as chromatic aberration in optical imaging systems, improving color reproducibility and remedying pixel defects in image sensors, and the like in imaging input systems for digital image input devices such as digital cameras and video cameras.

[Means of solving the problem] A predetermined calibration graphic is captured as an image, a correction function for conversion thereof to a proper image is derived for each digital image input device and stored in the device or system, and after normal photography, the image is converted to a correct image, using the correction function.

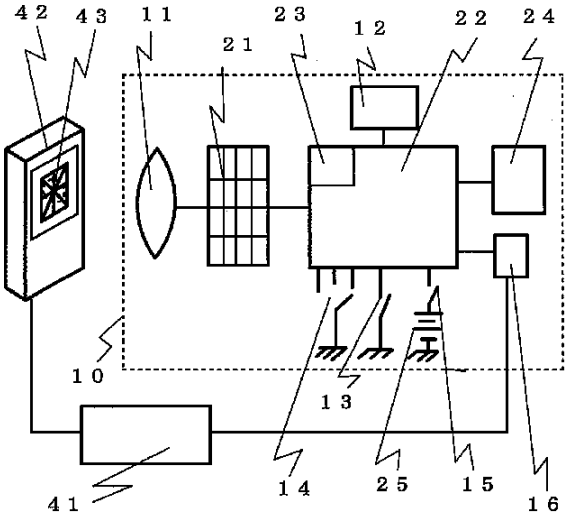

[Claims]

[Claim 1] A digital image input device comprising at least a lens, an imaging sensor, a control unit, a control memory, and the like, characterized in that in a calibration mode, an image of a predetermined calibration graphic is captured via a lens and an image sensor under predetermined conditions, and the control unit derives, through comparison with a previously stored desired image, and stores in the control memory, a function for correction of a captured image to a desired image; and during normal photography, the control unit perfects the captured image by conversion and correction of the captured image through prescribed calculation processing on the basis of the aforementioned correction function.

[Claim 2] A digital image input device comprising at least a lens, an imaging sensor, a control unit, a control memory, a connector for connecting to external equipment, and the like, characterized in that in the calibration mode, an image of a calibration graphic, which is generated by a calibration control device through connection to the calibration control device via a connector, is captured via a lens and an image sensor, and the calibration control device derives, and stores in the control memory, a function for correction of a captured image to a desired image through comparison with a desired image; and during normal photography, the control unit perfects the captured image by conversion and correction of the captured image through a prescribed calculation process on the basis of the aforementioned correction function.

[Claim 3] The digital image input device set forth in claims 1 and 2, characterized in that in the calibration mode, a function for correction of an image, captured via a lens and an image sensor, to a desired image is derived as a pixel-by-pixel mapping function, and during normal photography, the control unit perfects the captured image by mapping conversion of the captured image on the basis of the aforementioned correction function.

[Claim 4] The digital image input device set forth in claims 1 and 2, characterized in that in the calibration mode, a function for correction of an image, captured via a lens and an image sensor, to a desired image is derived in a spatial frequency domain, and during normal photography, the control unit perfects the image by multiplying the correction function by the Fourier-transformed form thereof for an image of a photographic subject to perform inverse Fourier transform.

[Claim 5] The digital image input device set forth in claims 1, 2, 3, and 4, characterized in that a correction function is derived for each primary color constituting a pixel of an image sensor, and chromatic aberration in the optical imaging system is also corrected.

[Claim 6] The digital image input device set forth in claims 1, 2, 3, 4, and 5, characterized in having a calibration graphic for a color conversion feature in a part of the calibration graphic, and in that color conversion corrections are made in the optical imaging system and image sensor.

[Claim 7] The digital image input device set forth in claims 1, 2, 3, 4, 5, and 6, characterized in that in the calibration mode, defects in pixels of the image sensor are detected, and defect information such as the positions thereof are stored, and images obtained during normal photography are corrected by performance of calculation processing such as interpolation on the basis of information on defects in pixels of the aforementioned image sensor.

[Detailed description of the invention]

[001]

[Industrial application field] The present invention relates to digital image input devices such as digital cameras and digital video cameras that convert images into electrical signals and record them, and in particular relates to digital image input devices that can individually correct various distortions by the optical imaging system, the conversion function of the image sensor, and the like.

[002]

[Prior art] In conventional cameras that use film, as well as in the increasingly popular digital cameras, an image of a photographic subject is formed by an optical imaging system, and the image is recorded by chemical reaction in film cameras, and by conversion of each pixel to an electrical signal in an image sensor in digital cameras. A CCD image sensor is usually used for the image sensor, but for color, the image sensor has unique structures such as color filters; the conditions as to the primary colors of the pixels, for example red, green, and blue, when viewed from the optical imaging system, are not necessarily the same, and there are stricter conditions as to aberrations than in conventional optical imaging systems. Of course, from the perspective of the fidelity of the image to the photographic subject, various aberrations, including chromatic aberration, have in the past been a shared problem among optical imaging systems, and both film types and image sensors have various problems in the process of recording the image, especially with regard to color reproducibility.

[003] In order to solve these problems, a great deal of effort has been devoted to the materials and design of the lenses constituting optical imaging systems. It is no exaggeration to say that most of the cost of a high-grade camera is in the lens system, and the situation has not changed to this day. Moreover, there actually

are subtle differences between products in terms of the color conversion functions of film and image sensors.

[004]

[Problem to be solved by the invention] Accordingly, the purpose of the present invention, is to devise, within the field of digital image input devices such as digital cameras and video cameras, a digital image input device that can obtain a faithful image of a photographic subject by digitally correcting various aberrations in the optical imaging system, as well as errors in the color conversion function of the image sensor, and defects and the like in each individual device, without increasing cost.

[005]

[Means of solving the problem] The basic concept of the present invention is to capture an image for calibration in a digital image input device such as a digital camera or video camera, derive in advance a correction function for the desired image for each individual device, store it in the control memory of the devices or system, and then perform specified calculations to perfect the image, on the basis of the correction function, each time an image is captured by photography, or all at once thereafter.

[006] The correction function can be derived by any of such methods as use of a control unit and a calibration program built into the digital image input device, or by preparing a separate calibration device and connecting it to the digital image input device after manufacture, analyzing the images captured by the device and deriving the correction function for each individual device, and recording it in the control memory of the digital image input device or system.

[007] In addition, the correction function can be obtained directly as a mapping function for each pixel of the image sensor, or a correction function can be obtained in the spatial frequency domain by Fourier transforming the image once captured. Note that the latter requires a control unit with high computing power since it is likely to require a lot of calculation processing and thus to take time, but has an advantage in enabling correction of reduced resolution by high-frequency band correction, etc.

[008] In addition to image distortion, chromatic aberration in the optical imaging system and errors in the color conversion function of the image sensor can also be targeted for correction. In other words, by generating a correction function for each primary color of the image sensor and correcting each primary color, it is possible to eliminate unfavorable conditions such as chromatic aberration in the optical imaging system or environments affecting primary colors differently in images due to structural problems of the CCD image sensor. Alternatively, a correction function that enables correction of the intensity of each primary color of a pixel can be generated by including a pattern in the calibration image that enables calibration of parameters that affect color reproducibility, such as color brightness and saturation, so that the image can be corrected after photography.

[009] Image sensors, liquid crystal displays, etc. have many pixels within a screen, but it is difficult to obtain elements that are completely free of defects, and if there was a method that could correct these defects, the quality of the image would improve, or if the range of permissible defects could be expanded, the overall cost could be reduced. Another purpose of the present invention is to improve quality or reduce costs through use of digital technology; thus, in a calibration mode, it enables detection of defects and storage thereof in the image sensor, and correction thereof each time an image is captured.

[010]

[Effect] The basic concept of the present invention has been explained above, but after a digital camera, video camera, or other digital image input device has been manufactured, a function for correction to a desired image is generated for each individual digital image input device through a calibration process, and the image is converted and corrected on the basis of the correction function at the time of photography to perfect the image, making it possible to correct various distortions and errors in the optical imaging system, image sensor, etc. Thus, the present invention makes it possible to obtain images of higher quality from a digital image input device than in the past, and from another perspective, makes it possible to obtain images sufficient for practical use even if a cheap, low-quality lens system is used, and thus can contribute to reduced costs of digital image input devices such as digital cameras and video cameras.

[011]

[Embodiments of the invention] Figure 1 shows an external view of a digital camera of the present invention. Multiple embodiments are cited below to explain the present invention, and Figure 1 is used as the shared external view. This drawing shows the external appearance of a digital camera 10, with number 11 representing a lens i.e. optical imaging system, number 12 representing a finder or a liquid crystal display for displaying an image after photography, number 13 representing a shutter button, number 14 representing a mode selector for switching between various functions, number 15 representing a power switch, and number 16 representing a connector for connection to an external device.

[012] Figure 2 shows a functional block diagram of a digital camera in the first embodiment of the present invention. In the first embodiment, an image of a predetermined calibration graphic is captured as a photographic subject in a calibration mode. Meanwhile, a proper, correct image of the calibration graphic is stored separately in a memory inside the digital camera, and a function mapping between pixels is derived as a correction function from the relationship of said image to the proper image, that is, to an ideal image. In other words, the location for correct positioning of individual pixels forming a captured image is determined, and the relationship that indicates this is the correction function. The objective during normal photography is to use the correction function to map and thus move the pixels of the captured image to obtain a correct image.

[013] In this drawing, an image of a photographic subject is formed on the image sensor 21 by the lens 11 i.e. an optical imaging system, and is activated by pressing the shutter button 13, so that the control unit 22 uses the image sensor 21 to convert the image into an electrical signal, to be stored in a memory 24. Number 23 represents a control memory in the control unit 22, and number 25 represents a battery. The other numbers 12, 13, 14, 15, and 16 represent the same terms as in Figure 1.

[014] Switching between normal photography and the calibration mode is by command from a mode selector 14. In the calibration mode, a predetermined calibration graphic 26 is used as a photographic subject, and the control unit 22 imports the calibration graphic 26 into the memory 24, taking various conditions such as the distance between the calibration graphic 26 and the lens 11, brightness, aperture, and/or shutter speed to be predetermined conditions. The control unit 22 then makes comparison to an ideal image stored in a part of the control memory 23 to calculate and derive a correction function, storing the latter in the control memory 23.

[015] During normal photography, an image captured by the lens 11 and the image sensor 12 is perfected by converting and correcting each pixel from the image through use of the correction function stored in the control memory 23. Figure 3 is used here to further explain the derivation of the correction function and the correction of the image using the correction function.

[016] Figure 3 shows an image 32 of the calibration graphic 26 captured in the memory 24 and an ideal image 33 for the calibration graphic stored in the control memory 23 as placed on the image sensor 21. Number 31 represents a representative portion of the pixels in the image sensor 21. The image 32 of the calibration graphic 26 is distorted by the optical imaging system, and the straight lines are curved as compared with the ideal image 33. This is an exaggerated drawing, but other partial distortions are also possible. The correction function in the present invention is a function that shows how to correctly interpret the pixels of the image obtained by comparing these two images 32 and 33 to clarify the relationship between the pixels. For example, the pixels may be numbered by column i and row j, and the brightness of a pixel (i, j) may be expressed as A(i, j), as shown in Figure 3(a); a pixel in Figure 3(b) may be similarly expressed as (p, q), the brightness of that point being expressed as B(p, q), to express the relationship whereby the pixel (i, j) in Figure 3(a) moves to (p, q) in Figure 3(b). Although there are various specific methods, the locations in which there are displacement of key points on the calibration graphic are tracked, and the remainder are determined by interpolation on the basis of their relationships.

[017] However, as can be understood by comparing Figures 3(a) and (b), there are pixels appearing in Figure 3(a) that lose their destination, and there are blank pixels of unspecified origin in Figure 3(b). While the former is permissible, the latter is not desirable, since it creates blank areas in the image, and the brightness of these points is determined by interpolation from the surrounding pixels. In this sense, B(p,q) is a function of A(i,j). It may be expressed mathematically as in Equation 1. This is the correction function.

[018]

[Equation 1]

$$B(p, q) = E[A(i, j)]$$

[019] Figure 4 shows a functional block diagram of a second embodiment of the present invention. The same numbers and names as in Figure 2 are used for the functional block diagram of the digital camera 10 in this drawing. A calibration control device 41 is connected to a connector 16 and also connected to a calibration graphic generator 42. In this embodiment, a program or ideal image for deriving a correction function is stored in the calibration control device 41, and the calibration control device 41 controls the calibration graphic generator 42 to show a calibration graphic 43 on a display thereof; meanwhile, the calibration control device 41 imports an image into the memory 24 via the lens 11 and image sensor 12 of the digital camera 10, further imports the image into the calibration control device 41 via the connector 16 to calculate and derive a correction function, and stores the correction function thus obtained in the control memory 23.

[020] The process of deriving the correction function is the same as in the first embodiment, but a system slightly simpler than in the first embodiment can be adopted. That is, the correction function can be derived easily if several dotted graphics are displayed in sequence as the calibration graphic 43, without displaying the entire graphic, since it is then clear where the pixels present in the dotted image in the captured image should be. This procedure can be repeated for all pixels; the correspondences of representative points are confirmed, and the rest are interpolated.

[021] The advantages of the second embodiment is that it enables use of a dedicated device with high computing power, and makes it possible to obtain a highly precise correction function by preparing multiple types of calibration graphics and performing a calibration operation while sequentially switching between them.

[022] Figures 5 and 6 are drawings for explaining the third embodiment of the present invention. The third embodiment is an example of obtaining a correction function in a spatial frequency domain and trying to perform image correction in the spatial frequency domain after photography. The photographic subject in Figure 5 is represented by number 51, the lens i.e. optical imaging system is represented by number 52, and the image input to the image sensor is represented by number 53, respectively, and taking the coordinates on the plane in which the photographic subject is located to be (x,y) and the coordinates on the plane in which the image is located to be (x',y') as indicated in the drawing, the amplitude u(x',y') of the image is expressed in integral form as Equation 2 on the basis of the amplitude g(x,y) of the photographic subject.

[023] Here h(x,y) is the amplitude of the image when a point light source δ(x)δ(y) is placed as the subject, and as a transfer function for an optical imaging system, represents a feature of that system. Note that δ(x) and δ(y) represent delta functions. When these expressions are Fourier transformed, the Fourier-transformed forms of the respective functions are U(X, Y), G(X, Y), and H(X, Y), wherein X and Y are spatial frequencies, and the convolution integral of Equation 2 is expressed as Equation 3. Accordingly, the correction function is calculated in the spatial frequency domain, taking H(X, Y) to be the desired design transfer function of the optical imaging system, and the actual transfer function obtained by Fourier transforming the image of the point light source actually obtained via the lens and image sensor of a digital camera to be K(X, Y), the correction function is stored in the control memory as H(X, Y)/K(X, Y).

[024]

[Equation 2]

$$u(x', y') = \iint g(x, y)\, h(x' - x, y' - y)\, dx\, dy$$

[025]

[Equation 3]

$$U(X, Y) = G(X, Y)\, H(X, Y)$$

[026] During normal photography, the Fourier transform U'(X,Y) of the amplitude u'(x,y) of the captured image is calculated and multiplied by the correction function H(X,Y)/K(X,Y), and then an inverse Fourier transform is performed to obtain a corrected image. That is, since U'(X,Y) is expressed as Equation 4, the result of multiplication thereof by the correction function and performing an inverse Fourier transform is the image that would be obtained if the optical imaging system were used as designed.

[027]

[Equation 4]

$$U'(X, Y) = G(X, Y)\, K(X, Y)$$

[028] In the above explanation, the relational expression between the amplitude of the subject and the image is the relational expression when coherent light is used for simplicity. In general, the relational expression is considered to be the time average of the squares of the respective amplitudes, and although the expression is somewhat more complicated, the relationship is almost the same.

[029] Figure 6 shows an example of the flow of arithmetic operations in the third embodiment of the present invention, in which calculations are performed in the spatial frequency domain to derive a correction function for calibration, correct an obtained image to a desired image, and the like. In the drawing, a point light source is placed as a calibration graphic to obtain a correction function for calibration, an image corresponding to it is obtained, the Fourier transform thereof is calculated, and a correction function in the spatial frequency domain is obtained by dividing the Fourier-transformed form for an ideal image already stored by the design transfer function of the lens system, and the correction function is stored in the control memory.

[030] During normal photography, the image captured and stored in memory is Fourier transformed and multiplied by a correction function at that stage, and then an inverse Fourier transform is performed to obtain a correct image. Fourier transform or inverse Fourier transform is required at each stage, and this calculation process uses a known FFT-type calculation algorithm to speed up the necessary calculations.

[031] So far, the first, second and third embodiments have been used to explain a method of using digital technology to correct image distortion mainly caused by the optical imaging system. If this concept is expanded, it can be applied to other functional improvements, in addition to merely correcting distortion. More specific would be: correction of manufacturing defects in image sensors, improvement of resolution through assistance in optical imaging system performance, complete elimination of chromatic aberration, and the like. These are briefly explained below.

[032] An example of application to correction of defects in an image sensor will be described here as a fourth embodiment of the present invention. No drawings are used, since the appearance and functional configuration of the digital camera are the same as in the first and second embodiments. An image sensor ordinarily comprises hundreds of thousands to millions of pixels, and it is extremely difficult to make all of these perform uniformly. Of course, efforts are made to improve quality despite the difficulties in manufacturing, but there may be performance fluctuations and sometimes defects in individual pixels when viewed microscopically. In the calibration mode of this embodiment, a graphic in one primary color is for example input to detect pixel defects or malfunctions, information on the position or defect of the defective pixel is stored in the control memory, and corrections are made on a pixel-by-pixel basis during normal shooting on the basis of the information as to defects. That is, if there is a problem with the relationship of the output to the input intensity, it is interpreted as such after the fact, and if a pixel is completely defective, it is corrected by a method of interpolation from the values of the surrounding pixels.

[033] An example in which resolution is improved is described below as a fifth embodiment of the present invention. There are no differences from the third embodiment in appearance, functional blocks, and so on of the digital camera, and there is therefore no use of drawings specifically for that purpose. The resolution of an image is determined by the resolution of the optical imaging system and number of pixels therein, and provided that the number of pixels is sufficient, a resolution greater than the capability of the optical imaging system can be obtained. That is, correction is made in the spatial frequency domain in the third embodiment so that the transfer function in the optical imaging systems of individual digital cameras approach the design target. A function that emphasizes the high range of spatial frequency is selected by actively ascertaining the implications of the correction function at this stage. In other words, while there is naturally a limit, since the correction function is needed for the transfer function of a somewhat high-grade optical imaging system, it is possible to obtain a resolution beyond the capability of the optical imaging system.

[034] An example in which chromatic aberration can be almost completely eliminated is described below as a sixth embodiment of the present invention. This embodiment has the same functional block configuration as in the first, second, and third embodiments, and therefore no specific diagram will be used for description. Specifically, each primary color of the image sensor is corrected when color images are processed. Depending on structure, CCD image sensors require color filters, and the conditions are not necessarily optically identical between the primary colors, hence of course the optical imaging system as such ordinarily has chromatic aberration. It is clear that these problems can be easily solved by preparing the image distortion correction function described in the present invention for each primary color of the image sensor. Through active consideration of the implications of this embodiment, it is also possible to implement cheap lenses regardless of chromatic aberration in the optical imaging system, and to rely completely on this embodiment for chromatic aberration elimination. Total cost reduction, if possible, would also have great significance.

[035] Color reproducibility is improved in the seventh embodiment of the present invention. Color reproduction is also a major problem in color images, but there is also chromatic aberration in the optical imaging system, image sensors have differences in sensitivity to color, and in some cases, there are also differences in sensitivity at the pixel level. Attributing all of these to the manufacturing process and hence increasing costs would be a social loss, but the present invention can provide a solution by a concept similar to that for remedying distortion. That is, a pattern capable of monitoring color reproducibility is included in the calibration graphic used in the calibration mode, and a correction function is derived for each pixel. For example, patterns with different parameters related to color reproducibility, such as brightness and saturation, are appropriately arranged on the screen 71, as indicated by the number 72 in Figure 7, to import an image into the digital camera. Since the color attributes of each pattern in the image are known in advance, the correction function is the interpretation thereof on the basis of the image obtained. The correction function is thus determined and

stored in the control memory inside the digital camera, and during normal shooting, the output is interpreted and corrected for each pixel in accordance with this correction function. The color conversion function of the image sensor, including degradation in the optical imaging system, is corrected by this process, thereby improving color fidelity.

[036] The present invention is intended to improve image quality by reducing the burden on the imaging optical system, the image sensor, etc., through storage of a correction function in advance and conversion of the image obtained into a correct image through arithmetic processing. Considered positively, use of low-cost components is conversely enabled thereby. This is premised on each camera having a correction function and performing arithmetic processing, through exploitation of the characteristics of digital cameras to the maximum degree. This arithmetic processing requires a considerable number of calculations due to the enormous number of pixels, and hence the computing device also requires high-performance elements. However, there is today amazing progress in this field of semiconductor integrated circuit technology, and although realizing all of the invention at once might take too much time, it can be partially implemented immediately; and considering the rapid progress in this technology, the necessary performance will be realized in the near future, and thus the importance of the present invention will not be lost.

[037]

[Effect of the invention] As explained with the digital camera as an example, the present invention can be easily realized by storing the correction functions for the optical imaging system or imaging and electrical signal conversion system of each device in a digital image input device, and using the correction functions each time an image is obtained or all at once afterward to obtain correct or better quality images. As explained above, the present invention makes it possible to obtain a high-quality digital image input device, but at the same time enables cost reduction through use of cheaper components while maintaining the current level of quality.

[038] Moreover, devices and materials in general often cannot sustain their initial performance due to deterioration or misalignment of adjustment points over time after manufacture. The present invention is for calibrating digital image input devices such as digital cameras and video cameras after manufacture, and employs digital processing technology to ensure that they exhibit quality performance, but it should be recognized that even calibration points will of course shift over time. The present invention is also effective in this regard, and a calibration program can be built into the device, or recalibration can be performed by a specialty store, manufacturer, etc. having a calibration control device to maintain the design performance. This is another important purpose of the present invention.

[039] Although the digital image input device according to the present invention has been described above, the abovementioned embodiments do not limit the scope of the present invention in any way. For example, the embodiments all cite digital cameras as examples, but the conditions are exactly the same for digital video cameras. Moreover, image correction is performed inside a digital camera in the embodiments of the present invention, but it is also possible to add a correction function to an image and perform correction in a separate device. Various applications and modifications are possible within the scope of the present invention.

[Brief explanation of the drawings]

[Figure 1] External view of a digital camera

[Figure 2] Functional block diagram of the first embodiment

[Figure 3] Calibration graphic image and desired image

[Figure 4] Functional block diagram of the second embodiment

[Figure 5] Coordinates of a photographic subject and an image

[Figure 6] Calculation flowchart for the third embodiment

[Figure 7] Calibration graphic for a color conversion feature in the seventh embodiment

[Explanation of symbols]

10: Digital camera, 11: Lens, 12: Liquid crystal display,
13: Shutter button, 14: Mode selector,
15: Power switch, 16: Connector
21: Image sensor, 22: Control unit
23: Control memory in control unit 32 [sic],
24: Memory, 25: Battery, 26: Calibration graphic,
31: Pixel of an image sensor,
32: Image of calibration graphic 36 [sic], 33: Ideal image,
41: Calibration control device, 42: Calibration graphic generator, 43: Calibration graphic,
51: Photographic subject, 52: Lens, 53: Image,
71: Screen, 72: Color correction pattern

[Figure 1]

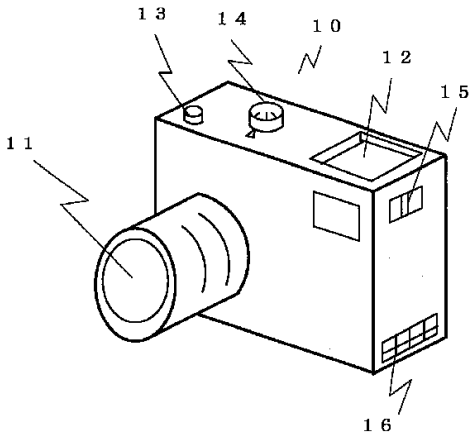

[Figure 2]

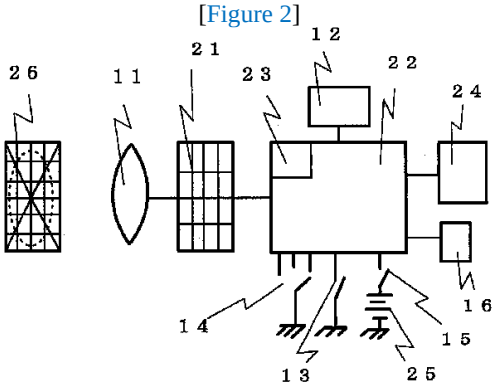

[Figure 3]

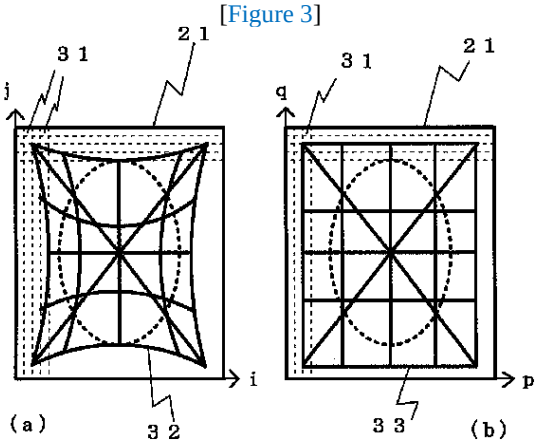

[Figure 4]

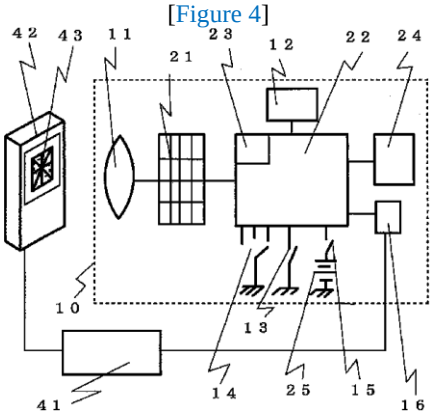

[Figure 5]

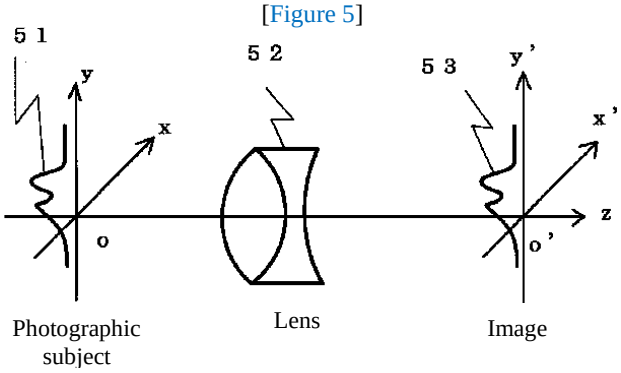

[Figure 7]

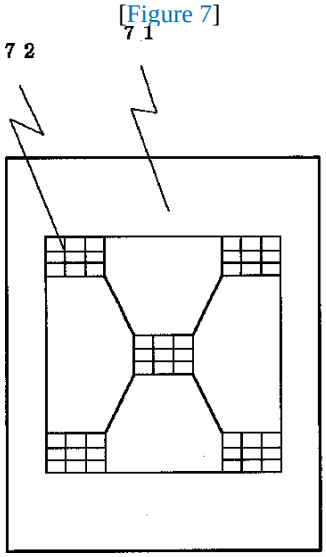

[Figure 6]

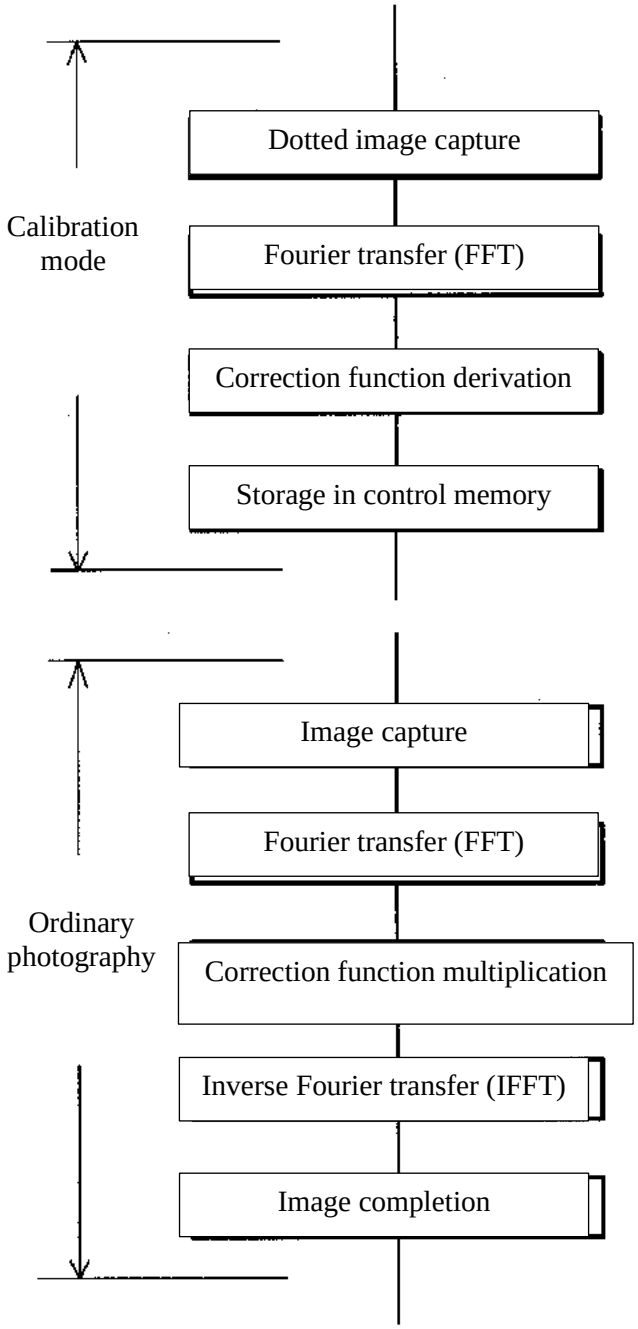
Calibration mode
Dotted image capture
Fourier transfer (FFT)
Correction function derivation
Storage in control memory
Ordinary photography
Image capture
Fourier transfer (FFT)
Correction function multiplication
Inverse Fourier transfer (IFFT)
Image completion

DECLARATION OF JEROME CONWAY

I, Jerome CONWAY, declare the following:

1. I am over 18 years of age and competent to make this declaration.

2. I am a qualified Japanese to English translator with more than 25 years of experience.

3. I have translated into English the attached document identified as "Japanese Unexamined Patent Application Publication No. JPH11-205652," bearing a publication date of July 30, 1999.

4. I affirm that the translated text has been translated and edited to the best of my ability and knowledge to accurately reflect the content, meaning, and style of the original text. I hereby certify under penalty of perjury under the laws of the United States of America that the foregoing constitutes, pursuant to my knowledge and belief, a true and correct translation of the original document.

5. I declare that all statements made herein of my knowledge are true, and that all statements made on information and belief are believed to be true, and that these statements were made with the knowledge that willful false statements and the like are punishable by fine or imprisonment, or both, under Section 1001 of Title 18 of the United States Code.

Date: August 23, 2024

Jerome Conway

Jerome CONWAY