US 20040179131A1

(19) United States

(12) Patent Application Publication

(10) Pub. No.: US 2004/0179131 A1

(43) Pub. Date: Sep. 16, 2004

Honda et al.

(54) IMAGE CAPTURING APPARATUS AND EXPOSURE SETTING METHOD THEREOF

(75) Inventors: **Tsutomu Honda**, Osaka (JP); **Akira Fukuda**, Osaka (JP)

Correspondence Address:
McDERMOTT, WILL & EMERY
600 13th Street, N.W.
Washington, DC 20005 (US)

(73) Assignee: **Minolta Co., Ltd.**

(21) Appl. No.: **10/464,448**

(22) Filed: **Jun. 19, 2003**

(30) **Foreign Application Priority Data**

Mar. 13, 2003 (JP) P2003-068304

Publication Classification

(51) **Int. Cl.**[7] **H04N 5/235**

(52) **U.S. Cl.** **348/362**

(57) **ABSTRACT**

A digital camera (image capturing apparatus) includes a liquid crystal display (LCD), a crossed switch constructed by a plurality of buttons, and a turnable dial. The digital camera has a plurality of function modes including an exposure correction mode and a histogram display mode of displaying a finder image and a histogram (luminance distribution) of the finder image on an LCD prior to an image capturing operation. In the exposure correction mode, an exposure correction value is changed by an operation input of two or more steps (actions) of the user on the buttons of the crossed switch. On the other hand, in the histogram display mode, an exposure correction value is changed by an operation input of a single step on the dial. With the configuration, in the case of displaying the luminance distribution regarding a finder image, a simple exposure setting can be made.

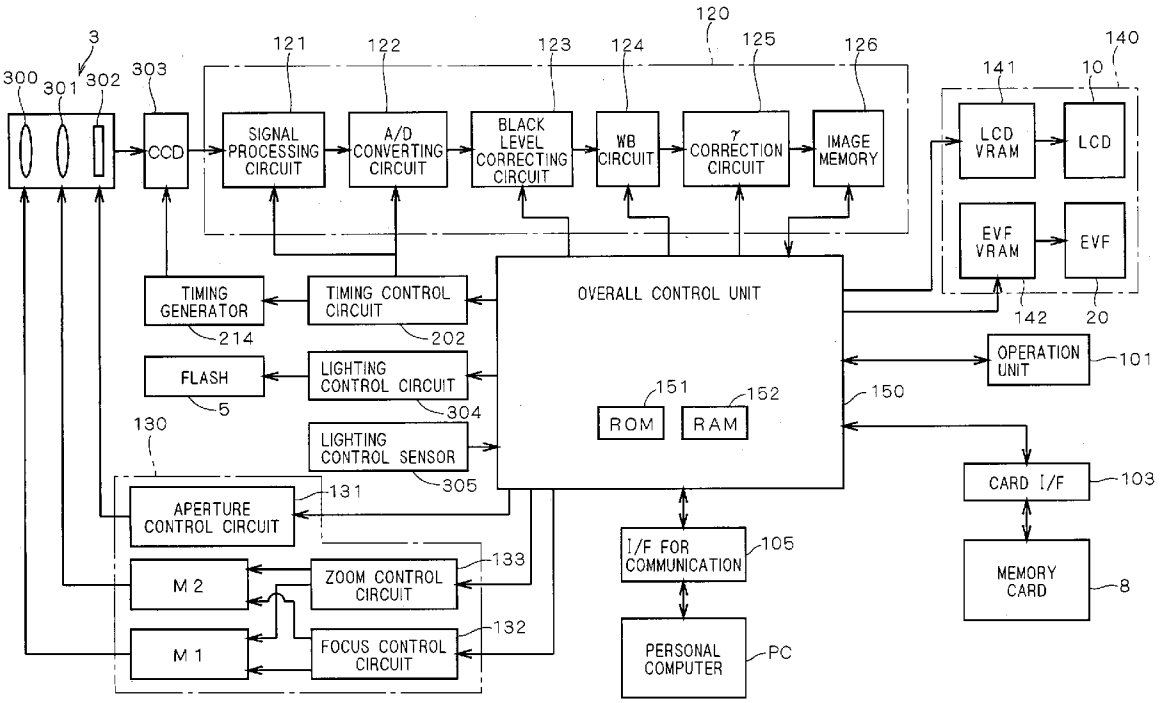

F I G . 1

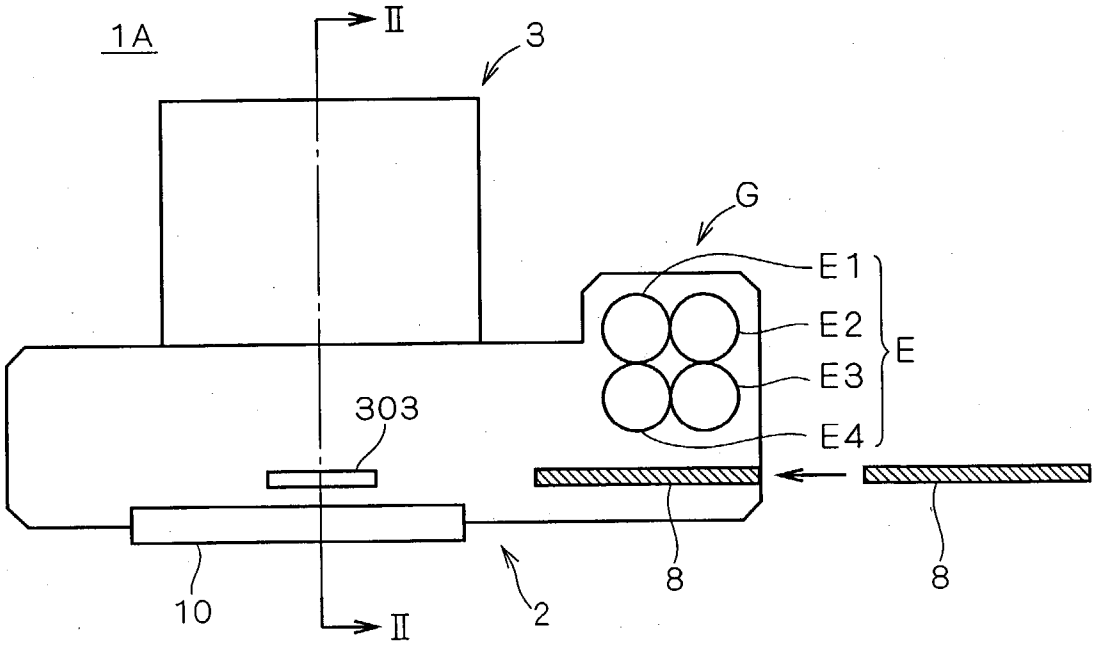
1A
II
3
G
E1
E2
E3
E4
E
303
8
8
10
2
II

F I G . 2

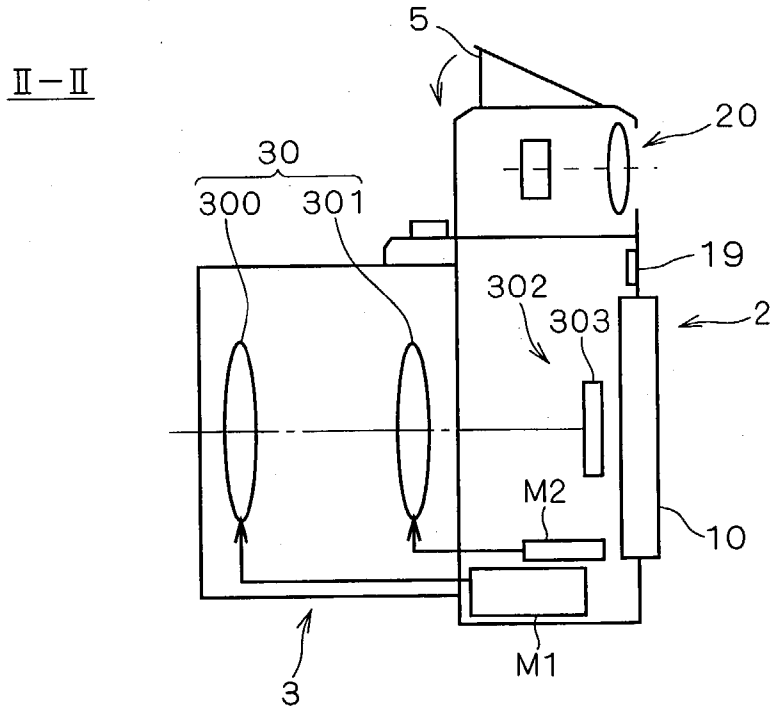
II−II
5
20
30
300
301
19
302
303
2
M2
10
3
M1

F I G . 3

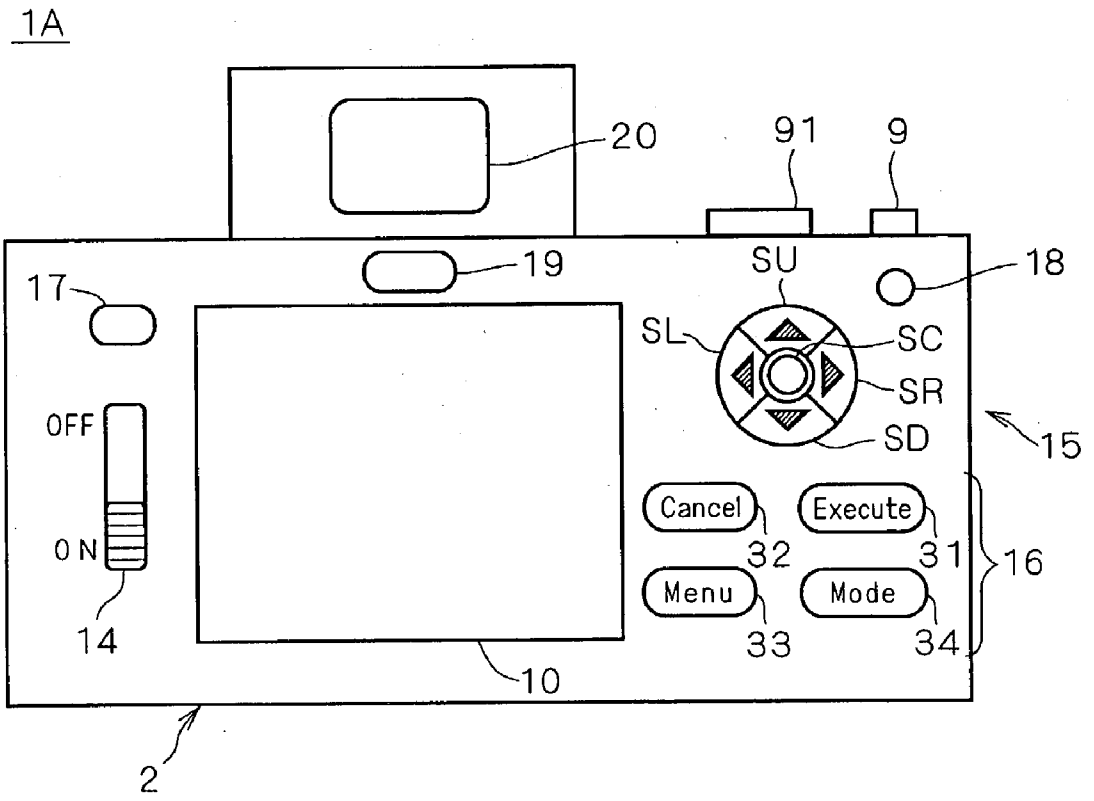
1A
20
91
9
19
18
17
SU
SL
SC
SR
SD
15
OFF
ON
Cancel
Execute
32
31
16
Menu
Mode
33
34
14
10
2

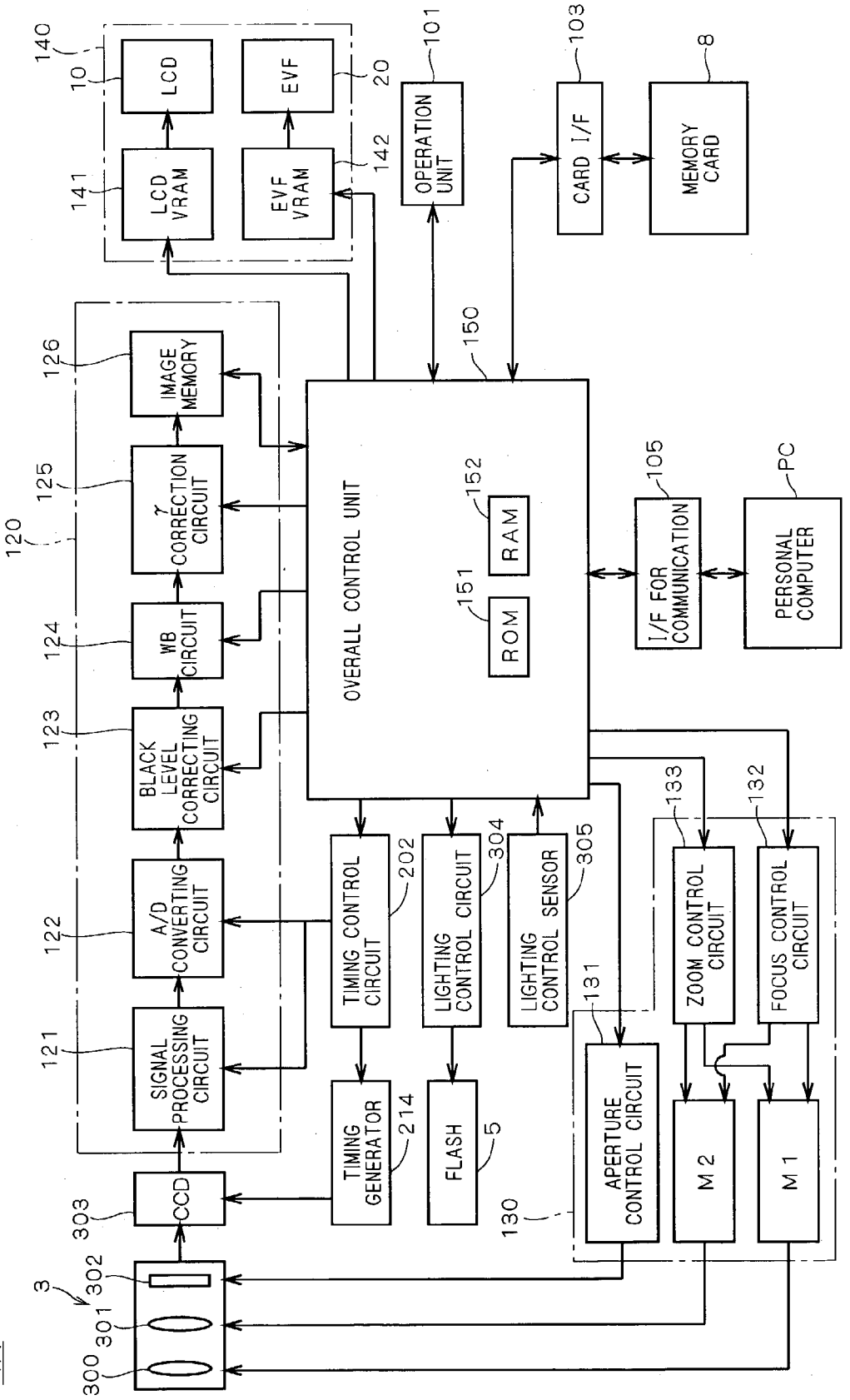
140
10
LCD
141
LCD VRAM
EVF
20
EVF VRAM
142
101
OPERATION UNIT
103
CARD I/F
8
MEMORY CARD
126
IMAGE MEMORY
125
γ CORRECTION CIRCUIT
120
124
WB CIRCUIT
123
BLACK LEVEL CORRECTING CIRCUIT
122
A/D CONVERTING CIRCUIT
121
SIGNAL PROCESSING CIRCUIT
150
OVERALL CONTROL UNIT
152
RAM
151
ROM
105
I/F FOR COMMUNICATION
PC
PERSONAL COMPUTER
TIMING CONTROL CIRCUIT
202
LIGHTING CONTROL CIRCUIT
304
LIGHTING CONTROL SENSOR
305
133
ZOOM CONTROL CIRCUIT
132
FOCUS CONTROL CIRCUIT
131
APERTURE CONTROL CIRCUIT
M 2
M 1
TIMING GENERATOR
214
FLASH
5
130
303
CCD
3
302
301
300

FIG. 4

1A

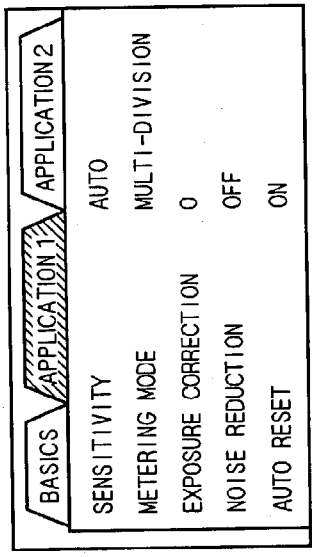

FIG. 5A

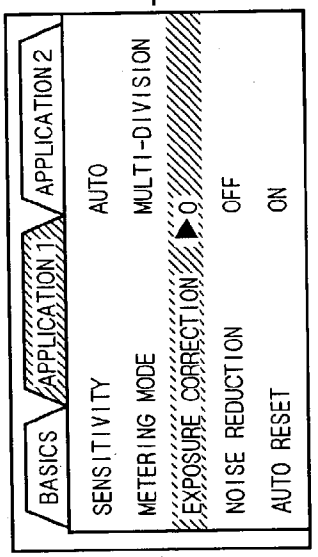

FIG. 5B

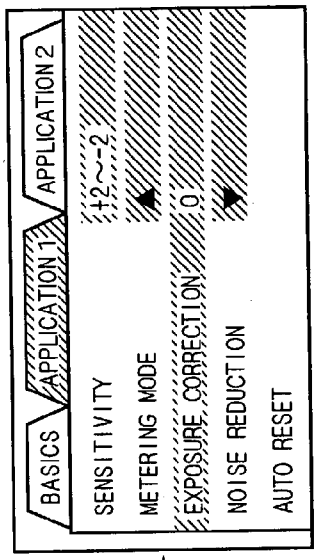

FIG. 5C

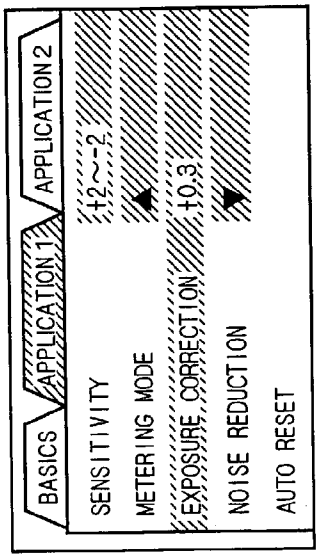

FIG. 5D

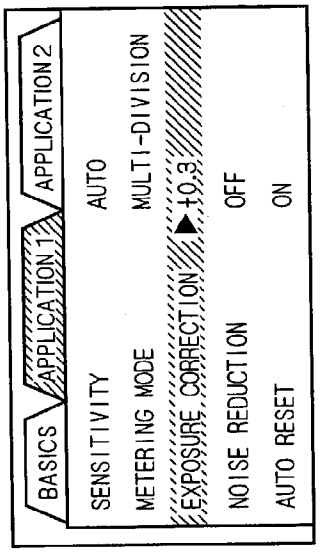

FIG. 5E

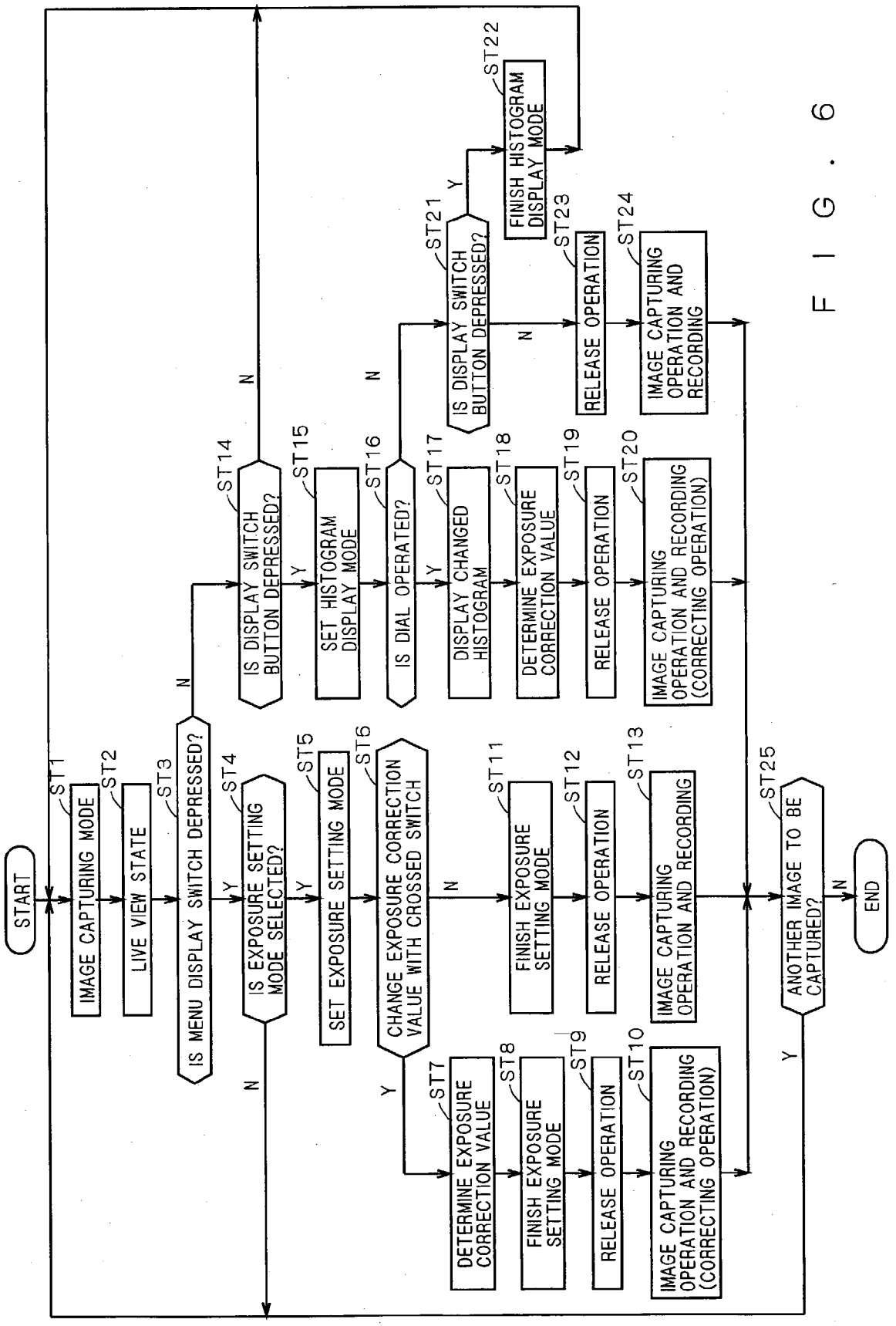
START
ST1
IMAGE CAPTURING MODE
ST2
LIVE VIEW STATE
ST3
IS MENU DISPLAY SWITCH DEPRESSED?
ST4
IS EXPOSURE SETTING MODE SELECTED?
ST5
SET EXPOSURE SETTING MODE
ST6
CHANGE EXPOSURE CORRECTION VALUE WITH CROSSED SWITCH
ST7
DETERMINE EXPOSURE CORRECTION VALUE
ST8
FINISH EXPOSURE SETTING MODE
ST9
RELEASE OPERATION
ST10
IMAGE CAPTURING OPERATION AND RECORDING (CORRECTING OPERATION)
ST11
FINISH EXPOSURE SETTING MODE
ST12
RELEASE OPERATION
ST13
IMAGE CAPTURING OPERATION AND RECORDING
ST14
IS DISPLAY SWITCH BUTTON DEPRESSED?
ST15
SET HISTOGRAM DISPLAY MODE
ST16
IS DIAL OPERATED?
ST17
DISPLAY CHANGED HISTOGRAM
ST18
DETERMINE EXPOSURE CORRECTION VALUE
ST19
RELEASE OPERATION
ST20
IMAGE CAPTURING OPERATION AND RECORDING (CORRECTING OPERATION)
ST21
IS DISPLAY SWITCH BUTTON DEPRESSED?
ST22
FINISH HISTOGRAM DISPLAY MODE
ST23
RELEASE OPERATION
ST24
IMAGE CAPTURING OPERATION AND RECORDING
ST25
ANOTHER IMAGE TO BE CAPTURED?
END
Y
N

FIG. 6

F I G . 7

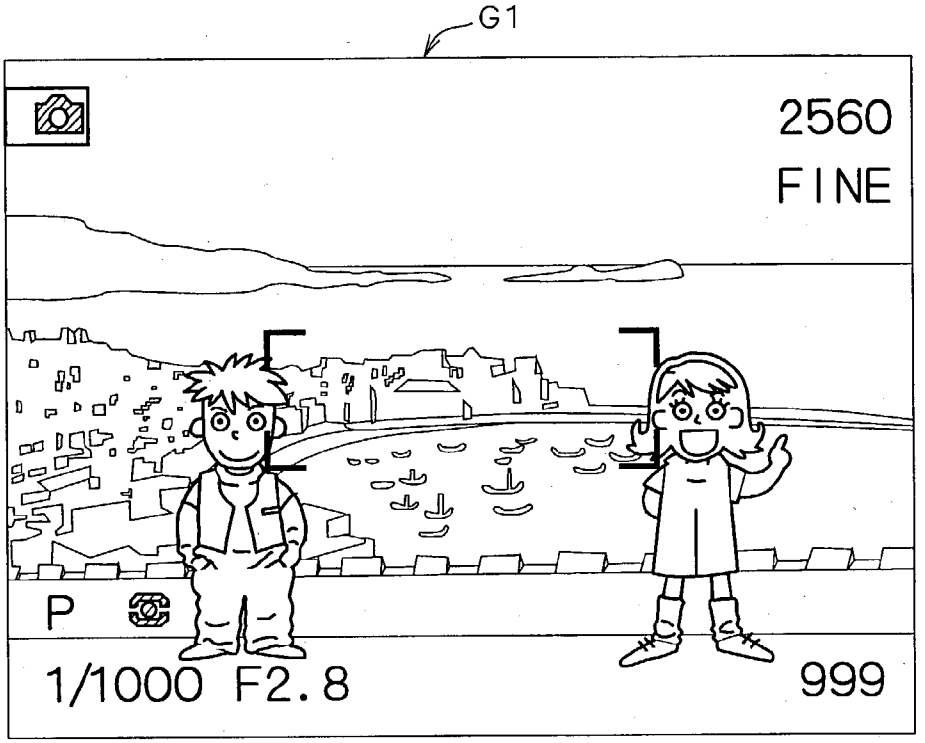

F I G . 8

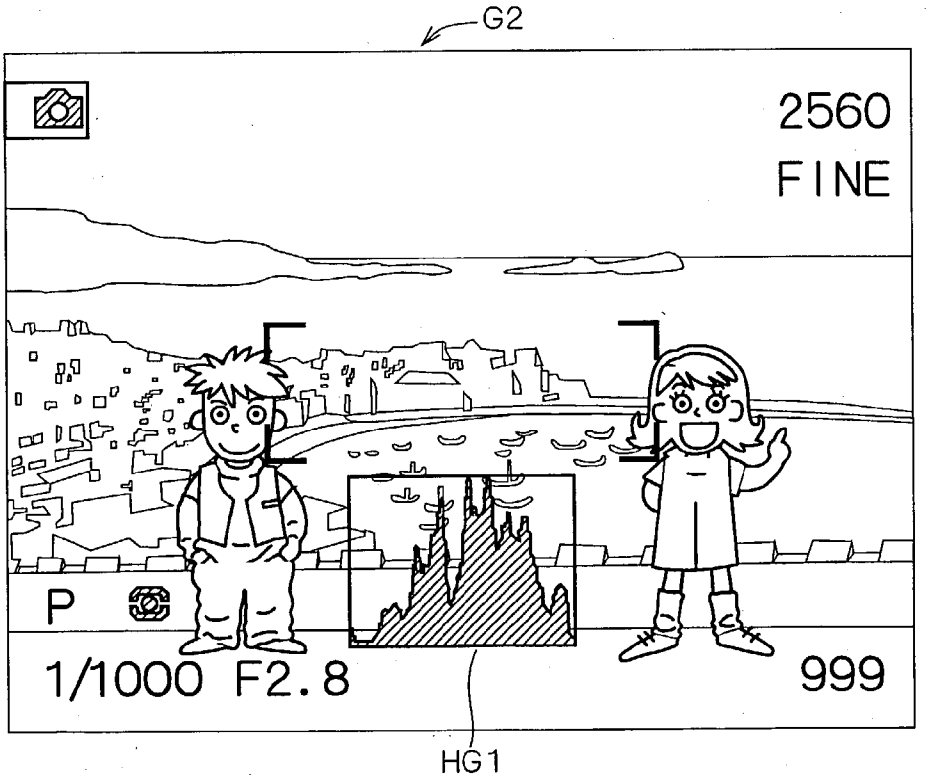

F I G . 9

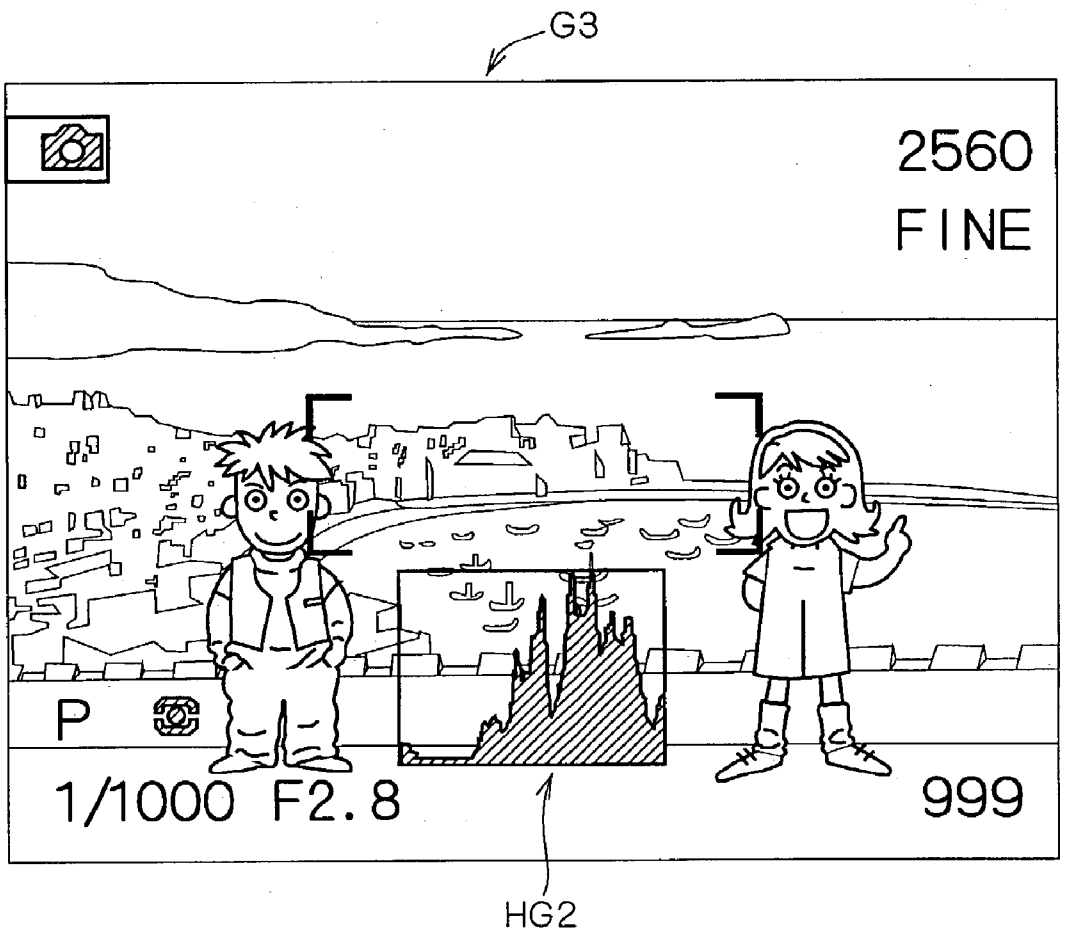

F I G . 1 0

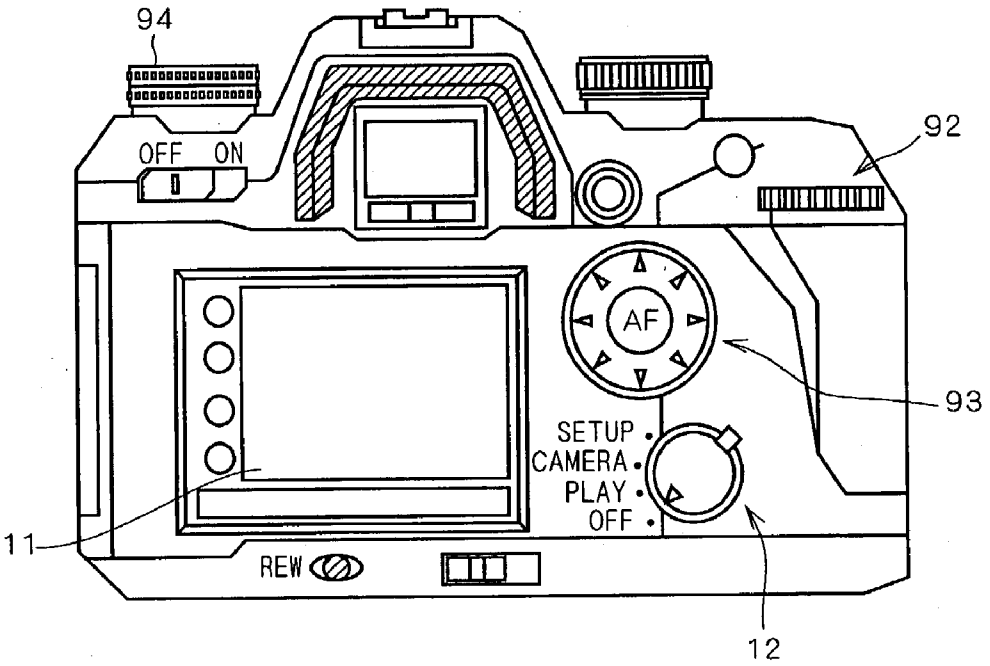

F I G . 1 1

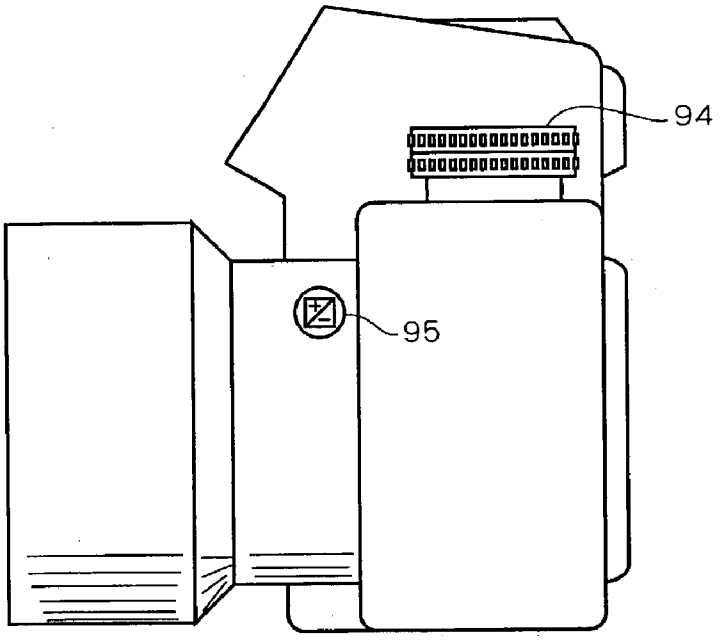

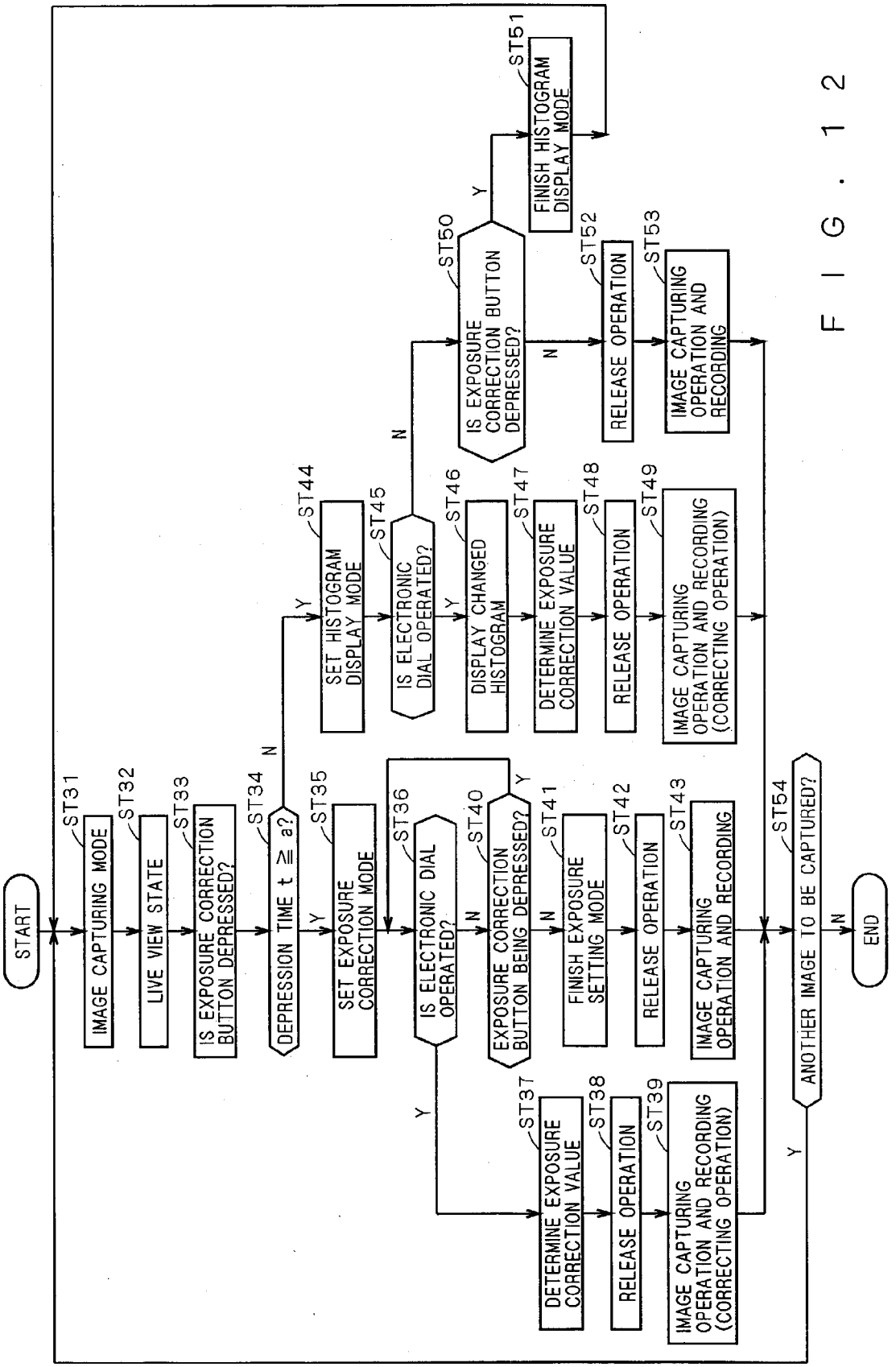
START
ST31
IMAGE CAPTURING MODE
ST32
LIVE VIEW STATE
ST33
IS EXPOSURE CORRECTION BUTTON DEPRESSED?
ST34
DEPRESSION TIME t ≧ a?
Y
N
ST35
SET EXPOSURE CORRECTION MODE
ST36
IS ELECTRONIC DIAL OPERATED?
Y
N
ST37
DETERMINE EXPOSURE CORRECTION VALUE
ST38
RELEASE OPERATION
ST39
IMAGE CAPTURING OPERATION AND RECORDING (CORRECTING OPERATION)
ST40
EXPOSURE CORRECTION BUTTON BEING DEPRESSED?
Y
N
ST41
FINISH EXPOSURE SETTING MODE
ST42
RELEASE OPERATION
ST43
IMAGE CAPTURING OPERATION AND RECORDING
ST44
SET HISTOGRAM DISPLAY MODE
ST45
IS ELECTRONIC DIAL OPERATED?
Y
N
ST46
DISPLAY CHANGED HISTOGRAM
ST47
DETERMINE EXPOSURE CORRECTION VALUE
ST48
RELEASE OPERATION
ST49
IMAGE CAPTURING OPERATION AND RECORDING (CORRECTING OPERATION)
ST50
IS EXPOSURE CORRECTION BUTTON DEPRESSED?
Y
N
ST51
FINISH HISTOGRAM DISPLAY MODE
ST52
RELEASE OPERATION
ST53
IMAGE CAPTURING OPERATION AND RECORDING
ST54
ANOTHER IMAGE TO BE CAPTURED?
Y
N
END

FIG. 12

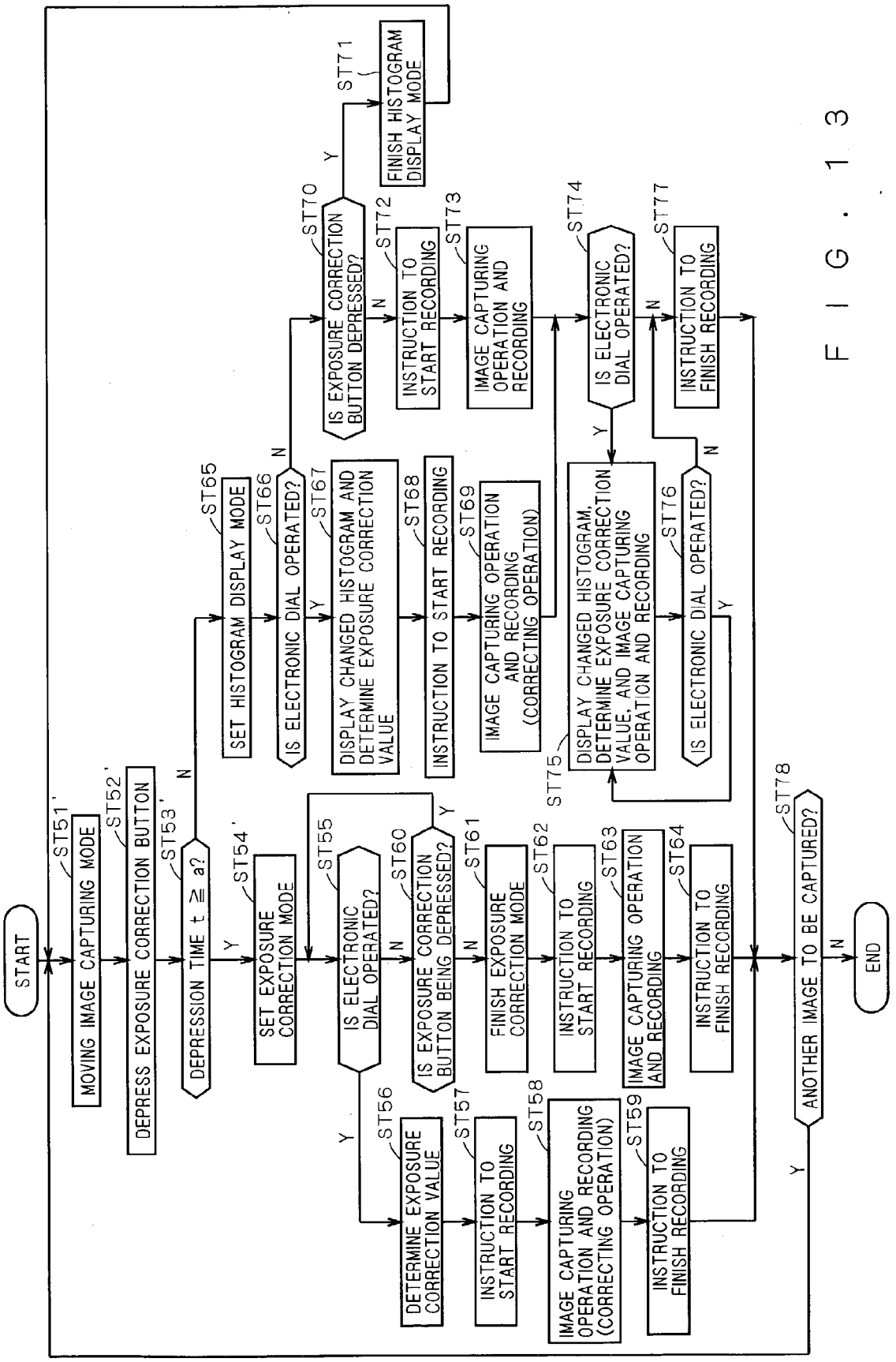
START
ST51'
MOVING IMAGE CAPTURING MODE
ST52'
DEPRESS EXPOSURE CORRECTION BUTTON
ST53'
DEPRESSION TIME t ≧ a?
Y
N
ST54'
SET EXPOSURE CORRECTION MODE
ST55
IS ELECTRONIC DIAL OPERATED?
ST56
DETERMINE EXPOSURE CORRECTION VALUE
ST57
INSTRUCTION TO START RECORDING
ST58
IMAGE CAPTURING OPERATION AND RECORDING (CORRECTING OPERATION)
ST59
INSTRUCTION TO FINISH RECORDING
ST60
IS EXPOSURE CORRECTION BUTTON BEING DEPRESSED?
ST61
FINISH EXPOSURE CORRECTION MODE
ST62
INSTRUCTION TO START RECORDING
ST63
IMAGE CAPTURING OPERATION AND RECORDING
ST64
INSTRUCTION TO FINISH RECORDING
ST65
SET HISTOGRAM DISPLAY MODE
ST66
IS ELECTRONIC DIAL OPERATED?
ST67
DISPLAY CHANGED HISTOGRAM AND DETERMINE EXPOSURE CORRECTION VALUE
ST68
INSTRUCTION TO START RECORDING
ST69
IMAGE CAPTURING OPERATION AND RECORDING (CORRECTING OPERATION)
ST70
IS EXPOSURE CORRECTION BUTTON DEPRESSED?
ST71
FINISH HISTOGRAM DISPLAY MODE
ST72
INSTRUCTION TO START RECORDING
ST73
IMAGE CAPTURING OPERATION AND RECORDING
ST74
IS ELECTRONIC DIAL OPERATED?
ST75
DISPLAY CHANGED HISTOGRAM, DETERMINE EXPOSURE CORRECTION VALUE, AND IMAGE CAPTURING OPERATION AND RECORDING
ST76
IS ELECTRONIC DIAL OPERATED?
ST77
INSTRUCTION TO FINISH RECORDING
ST78
ANOTHER IMAGE TO BE CAPTURED?
END

FIG. 13

IMAGE CAPTURING APPARATUS AND EXPOSURE SETTING METHOD THEREOF

[0001] This application is based on application No. 2003-068304 filed in Japan, the contents of which are hereby incorporated by reference.

BACKGROUND OF THE INVENTION

[0002] 1. Field of the Invention

[0003] The present invention relates to a technique of an image capturing apparatus having a plurality of function modes.

[0004] 2. Description of the Background Art

[0005] Some digital cameras (image capturing apparatuses) can display not only a captured image on a display such as an LCD but also various information before an image capturing operation.

[0006] For example, Japanese Patent Application Laid-Open Nos. 6-282004 (1994) and 2001-245204 disclose a technique of displaying a finder image which is not yet subjected to image capturing operation (preview image) and, in addition, a luminance distribution of the finder image as a histogram in a real-time manner. It is described that the histogram changes according to exposure conditions.

[0007] Although not described in the above publications, even in the case of changing the exposure conditions while recognizing an exposure state by using the histogram, the same operation as a normal exposure condition changing operation is required. The operation is generally a complicated operation of two or more actions, so that it is difficult to easily make exposure setting.

SUMMARY OF THE INVENTION

[0008] The present invention is directed to an image capturing apparatus.

[0009] An image capturing apparatus according to the present invention has a plurality of function modes and comprises: (a) an image capturing part for obtaining a preview image of a subject prior to an image capturing operation; (b) a display for displaying the preview image; (c) a mode setting part for setting an image information display mode for displaying information regarding the preview image on the display; (d) a first exposure setting member for making an exposure setting on the basis of a first input operation when a function mode of the image capturing apparatus is set to the image information display mode; and (e) a second exposure setting member for making an exposure setting on the basis of a second input operation when a function mode of the image capturing apparatus is set to a predetermined function mode different from the image information display mode, wherein the number of action(s) of the first input operation by the first exposure setting member is smaller than that of the second input operation by the second exposure setting member. Consequently, at the time of displaying image information of a finder image, a simple exposure setting can be made.

[0010] According to a preferred embodiment, in the image capturing apparatus, the first input operation is constructed by a single input action, and the second input operation is constructed by a plurality of input actions. Therefore, a prompt exposure correction can be performed in the image information display mode.

[0011] The present invention is also directed to an exposure setting method in an image capturing apparatus having a plurality of function modes.

[0012] Therefore, an object of the present invention is to provide a technique of an image capturing apparatus in which a simple exposure setting can be made at the time of displaying image information regarding a finder image.

[0013] These and other objects, features, aspects and advantages of the present invention will become more apparent from the following detailed description of the present invention when taken in conjunction with the accompanying drawings.

BRIEF DESCRIPTION OF THE DRAWINGS

[0014] **FIG. 1** is a diagram showing a schematic configuration of the appearance of a digital camera according to a first embodiment of the present invention;

[0015] **FIG. 2** is a diagram showing a schematic configuration of the appearance of the digital camera of **FIG. 1**;

[0016] **FIG. 3** is a diagram showing a schematic configuration of the appearance of the digital camera of **FIG. 1**;

[0017] **FIG. 4** is a schematic block diagram showing the internal configuration of the digital camera of **FIG. 1**;

[0018] **FIGS. 5A** to **5**E are diagrams for describing setting of exposure correction values in an exposure correction mode;

[0019] **FIG. 6** is a flowchart showing basic operation of the digital camera of **FIG. 1**;

[0020] **FIG. 7** is a diagram for describing the operation of the digital camera of **FIG. 1**;

[0021] **FIG. 8** is a diagram for describing the operation of the digital camera of **FIG. 1**;

[0022] **FIG. 9** is a diagram for describing the operation of the digital camera of **FIG. 1**;

[0023] **FIG. 10** is a diagram showing a schematic configuration of the appearance of a digital camera according to a second embodiment of the present invention;

[0024] **FIG. 11** is a diagram showing a schematic configuration of the appearance of the digital camera of **FIG. 10**;

[0025] **FIG. 12** is a flowchart showing basic operation of the digital camera of **FIG. 10**; and

[0026] **FIG. 13** is a flowchart for describing moving image capturing operation.

DESCRIPTION OF THE PREFERRED EMBODIMENTS

[0027] First Embodiment

[0028] Configuration of Main Components of Digital Camera

[0029] FIGS. **1** to **3** are diagrams each schematically showing the appearance of a digital camera **1**A according to

a first embodiment of the present invention. **FIG. 1** is a plan view of the digital camera **1**A. **FIG. 2** is a cross section taken along line **11-11** of **FIG. 1**. **FIG. 3** is a rear view of the digital camera **1**A.

[**0030**] The digital camera **1**A functions as an image capturing apparatus and is constructed by a camera body **2** having an almost rectangular parallelepiped shape and a taking lens **3** which can be detachably attached to the camera body **2**. As shown in **FIG. 1, a** memory card **8** for recording a captured image is removably housed in the digital camera **1**A. The digital camera **1**A operates on, as a driving source, a power supply battery E in which four AA cells E**1** to E**4** are connected in series.

[**0031**] As shown in **FIG. 2**, the taking lens **3** as a zoom lens has a lens unit **30**. The diagram shows, as the taking lens **3**, two groups of zoom lenses, and the lens unit **30** is roughly divided into two lens units **300** and **301**. In **FIGS. 2 and 3**, for simplicity of the drawings, each of the lens units **300** and **301** is shown as a single lens. In practice, each of the lens units **300** and **301** is not limited to a single lens but may be a group of a plurality of lenses.

[**0032**] The camera body **2** has therein a motor M**1** for driving the lens unit **300** and a motor M**2** for driving the lens unit **301**. By moving the lens units **300** and **301** in the optical axis direction independently at each other by driving the motors M**1** and M**2**, the zoom magnification of the taking lens **3** can be changed. By driving the lens units **300** and **301** by using the motors M**1** and M**2**, the focus state of the taking lens **3** can be changed, that is, focusing (AF) operation can be performed.

[**0033**] A color image capturing device **303** is provided in a proper position rearward of the lens unit **30** of the imaging lens **3**. The color image capturing device **303** takes the form of a single-chip color area sensor in which color filters of R (red), G (green) and B (blue) are adhered in a checker pattern on the surface of pixels of the area sensor formed by a CCD. The color image capturing device (hereinafter, referred to as "CCD" (Charged Coupled Device)) **303** has, for example, 1600×1200 pixels. The CCD **303** functions as image capturing means for capturing a finder image (preview image) of a subject before image capturing operation.

[**0034**] As shown in **FIG. 1**, in the front face of the camera body **2**, a grip part G is provided. A pop-up-type built-in flash **5** is provided in a proper position of an upper end of the camera body **2**. The built-in flash **5** can emit flat light.

[**0035**] As shown in **FIG. 3, a** shutter start button **9** and a dial **91** are provided on the top face of the camera body **2**. The shutter start button **9** has the function of detecting a lightly depressed state (hereinafter, referred to as "S1 state") used as a trigger for focus adjustment and a full depression state (hereinafter, referred to as "S2 state") used as a trigger of capturing an image for recording and determining the state.

[**0036**] The dial **91** is turnable. By turning the dial **91**, various setting values can be continuously easily changed. In the case where a histogram display mode (which will be described later) in the plurality of function modes of the digital camera **1**A is set, the dial **91** is switched to be used for exposure correction. Specifically, in the histogram display mode, on the basis of an operation input constructed by a single operation input step on the dial **91**, exposure setting regarding exposure correction is made. In the case where a function mode other than the histogram display mode is set, a setting of a kind other than the exposure setting is made on the basis of the operation inputted to the dial **91**. The settings of other kinds include, for example, adjustment of contrast or saturation and are mainly settings of image capturing conditions other than the exposure adjustment.

[**0037**] On the other hand, on the rear face of the camera body **2**, an electronic view finder (hereinafter, referred to as "EVF") **20** and a liquid crystal display (hereinafter, "LCD") **10** are provided. Different from an optical finder, the EVF **20** and the LCD **10** for performing live view display of image signals from the CCD **303** in an image capturing standby state function as a finder. A finder image which is not yet subjected to the image capturing operation can be displayed on the EVF **20** and the LCD **10**.

[**0038**] The LCD **10** can also display a menu screen for setting image capturing conditions in an image capturing mode and reproduce and display a captured image which is recorded on the memory card **8** in a reproduction mode.

[**0039**] A power switch **14** is provided in the left part of the rear face of the camera body **2** and a crossed switch **15** is provided in the right part of the rear face. The crossed switch **15** has five operation buttons. By depressing buttons SU, SD, SR and SL of four ways of up, down, right and left directions in the operation buttons, various operation can be performed. By depressing an execution button SC, various settings can be determined. The crossed switch **15** functions as, for example, a switch for changing an item selected in the menu screen displayed on the LCD **10** and changing a frame to be reproduced which is selected in an index screen. In the image capturing mode, the right and left buttons SR and SL function as a switch for changing the zoom magnification. Concretely, by changing relative positions of the two lens units **300** and **301** by the driving of the motors M**1** and M**2**, the zoom magnification is changed. More specifically, when the right switch SR is depressed, the lens units **300** and **301** continuously move to the wide angle side. When the left switch SL is depressed, the lens units **300** and **301** continuously move to the telephoto side.

[**0040**] Below the crossed switch **15**, a switch group **16** of an execution switch **31**, a cancel switch **32**, a menu display switch **33** and a mode switch **34** is provided. The execution switch **31** is a switch for determining an item selected on the menu screen. The cancel switch **32** is a switch for canceling an item selected on the menu screen. The menu display switch **33** is a switch for displaying a menu screen on the LCD **10** or switching the item on the menu screen. The mode switch **34** is a switch for switching between an "image capturing mode" and a "reproduction mode" as function modes of the digital camera **1**A. The image capturing mode is a mode of capturing a still image or a moving image. The reproduction mode is a mode of reproducing and displaying a captured image recorded on the memory card **8** onto the LCD **10** or EVF **20**. When the digital camera **1**A is started, the image capturing mode is automatically selected. After the start, each time the mode switch **34** is depressed, the image capturing mode and the reproduction mode are switched.

[**0041**] On the rear face of the camera body **2**, a display switch button **17** is provided above the power switch **14**, and an AE lock button **18** is provided in the vicinity of the shutter

start button **9**. The display switch button **17** is a button for switching the function mode to a histogram display mode (luminance distribution display mode) for displaying a histogram indicative of a luminance distribution of image data so as to be superposed on a live view image displayed on the LCD **10** (EVF **20**). The AE lock button **18** is a button for locking an AE setting.

[**0042**] In the rear face of the camera body **2**, an eye approach sensor **19** is also provided in a center upper portion in the LCD **10**. The eye approach sensor **19** senses approach of the user peeping through the EVF **20**. When the eye approach sensor **19** senses the approach, the EVF **20** is turned on.

[**0043**] The internal configuration of the digital camera **1**A will now be described. **FIG. 4** is a schematic block diagram showing the internal configuration of the digital camera **1**A.

[**0044**] The taking lens **3** has the lens units **300** and **301** and also an aperture **302** for adjusting the quantity of light passed to the inside. In **FIG. 4**, for convenience of the diagram, the aperture **302** is disposed on the rear side of the lens unit **301**. However, the placement of the aperture **302** is not limited to the above placement. For example, the aperture **302** may be provided in the lens unit **301** (or **300**) or provided between the lens units **300** and **301**.

[**0045**] A CCD **303** photoelectrically converts a light image of the subject, which is formed by the taking lens **3** into an image signal of color components of R (red), G (green) and B (blue) (signal made by a signal sequence of pixel signals received by each pixel) and outputs the image signal. A timing generator **214** generates various timing pulses for controlling the driving of the CCD **303**.

[**0046**] An exposure control in the digital camera **1**A is executed by adjusting an exposure amount of the aperture **302** and the CCD **303**, that is, charge accumulation time corresponding to shutter speed. In the case where proper shutter speed cannot be set when the luminance of the subject is low, by adjusting the level of an image signal outputted from the CCD **303**, improper exposure due to insufficient exposure is corrected. Specifically, at the time of low luminance, the exposure control is executed by a combination of shutter speed and gain adjustment. The level adjustment of an image signal is performed by adjusting the gain of an AGC circuit in a signal processing circuit **121**.

[**0047**] The timing generator **214** generates a drive control signal of the CCD **303** synchronously with a reference clock transmitted from a timing control circuit **202**. The timing generator **214** generates clock signals such as timing signals indicative of start/end of integration (start/end of exposure) and read control signals (horizontal sync signal, vertical sync signal and transfer signal) of a photosensitive signal of each pixel, and outputs the clock signals to the CCD **303**.

[**0048**] A signal processing unit **120** executes predetermined analog signal processing and digital signal processing on the image signal outputted from the CCD **303**. The signal processing on the image signal is performed on every photosensitive signal of each of pixels constructing image data. The signal processing unit **120** has the analog signal processing circuit **121**, an A/D converting circuit **122**, a black level correcting circuit **123**, a white balance (WB) circuit **124**, a γ correcting circuit **125** and an image memory **126**.

[**0049**] The analog signal processing circuit **121** for performing analog signal processing is constructed by mainly a CDS (Correlated Double Sampling) circuit and an AGC (Auto Gain Control) circuit, and performs reduction in sampling noise of a pixel signal outputted from the CCD **303** and adjustment of the signal level. The gain control in the AGC circuit is performed also in the case of compensating an insufficient level of a captured image when proper exposure cannot be obtained from the f-number of the aperture **302** and exposure time of the CCD **303**.

[**0050**] The A/D converting circuit **122** converts an image signal as an analog signal outputted from the analog signal processing circuit **121** to image data as a digital signal. The converted image data is temporarily stored in the image memory **126**.

[**0051**] The black level correcting circuit **123** corrects the black level of the image signal subjected to A/D conversion in the A/D converting circuit **122** to a reference black level. The WB circuit **124** performs level conversion on image data of each of the color components R, G and B. The WB circuit **124** converts the level of image data of each of the color components R, G and B by using a level conversion table inputted from an overall control unit **150**. A conversion coefficient (gradient of a characteristic) of each color component in the level conversion table is set for each captured image by the overall control unit **150**.

[**0052**] The γ correcting circuit **125** is a circuit for correcting the γ characteristic of image data and corrects the level of image data by using a preset γ correction table.

[**0053**] The image memory **126** is a memory for temporarily storing image data outputted from the γ correcting circuit **125**. The image memory **126** has a storage capacity capable of storing image data of one frame. Specifically, the image memory **126** has a storage capacity of storing image data of 2500×1920 pixels corresponding to the number of pixels of the CCD **303**. Each pixel data is stored in a corresponding pixel position.

[**0054**] A lighting control unit **304** controls a light emission quantity of a built-in flash **5** used for photographing with flashlight to a predetermined light emission quantity which is set by the overall control unit **150**. At the time of photographing with flashlight, reflection light of flashlight from a subject is received by a lighting control sensor **305** on start of exposure. When a received light amount reaches a predetermined light amount, a light emission stop signal is outputted from the lighting control unit **304**. In response to the light emission stop signal, light emission of the built-in flash **5** is forcedly stopped, and the light emission amount of the built-in flash **5** is controlled to a predetermined light emission amount.

[**0055**] A lens control unit **130** controls driving of members of the lens units **300** and **301** and the aperture **302** in the taking lens **3**. The lens control unit **130** includes an aperture control circuit **131** for controlling the f-number of the aperture **302**, a zoom control circuit **133** for changing the variable power of the zoom by driving the motors M**1** and M**2**, and a focus control circuit **132** for performing focusing control by driving the motors M**1** and M**2**.

[**0056**] The aperture control circuit **131** drives the aperture **302** on the basis of the f-number inputted from the overall control unit **150** and sets the opening amount as the f-num-

ber. The focus control circuit **132** controls the drive amount of the motors M1 and M2 on the basis of an AF control signal inputted from the overall control unit **150** to set the lens units **300** and **301** to the focal positions. The zoom control circuit **133** moves the lens units **300** and **301** by driving the motors M1 and M2 on the basis of a zoom control signal inputted from the overall control unit **150** in accordance with an input by the crossed switch **15**, thereby moving the zoom to the wide angle side or the telephoto side.

[**0057**] A display unit **140** displays an image on the LCD **10** and the EVF **20**. The display unit **140** has, in addition to the LCD **10** and the EVF **20**, an LCD VRAM **141** as a buffer memory of image data to be reproduced and displayed on the LCD **10**, and an EVF VRAM **142** as a buffer memory of image data reproduced and displayed on the EVF **20**. The LCD VRAM **141** has a storage capacity of image data corresponding to the pixel number of 640×480 of the LCD. The EVF VRAM **142** has a storage capacity of image data corresponding to the pixel number of 400×300 of the EVF **20**.

[**0058**] In an image capturing standby state, each of pixel data of an image (finder image) sequentially generated every 1/30 (second) by the CCD **303** is subjected to a predetermined signal process by the signal processing unit **120** and, after that, the processed data is temporarily stored in the image memory **126**. The data is read by the overall control unit **150** and its data size is adjusted. After that, the resultant data is transferred to the LCD VRAM **141** and the EVF VRAM **142** and displayed as a finder image on the LCD **10** and the EVF **20**. Consequently, the user can visually recognize an image of the subject. In a reproduction mode, an image read out from the memory card **8** is subjected to a predetermined signal process by the overall control unit **150** and, after that, the processed data is transferred to the LCD VRAM **141** and reproduced and displayed on the LCD **10**.

[**0059**] An operation unit **101** is used to input operation information of operating members related to image capturing and reproduction provided for the camera body **2** to the overall control unit **150**. The operation information inputted from the operation unit **101** includes operation information of operating members such as the shutter start button **9**, power switch **14**, crossed switch **15** and switch group **16**.

[**0060**] The overall control unit **150** is a microcomputer for performing centralized control on the image capturing function and the reproducing function. To the overall control unit **150**, the memory card **8** is connected via a card interface **103** and a personal computer PC is externally connected via an interface **105** for communication.

[**0061**] The overall control unit **150** has: a ROM **151** in which a processing program for performing a number of concrete processes in the image capturing function and the reproducing function and a control program for controlling driving of the members of the digital camera **1A** are stored; and a RAM **152** as a work area for performing a number of computing works in accordance with the processing program and the control program. Program data such as an exposure correction value setting program recorded on the memory card **8** as a recording medium can be read via the card interface **103** and stored into the ROM **151**. Therefore, the processing and control programs can be installed from the memory card **8** into the digital camera **1A**. Alternately, the processing and control programs may be installed from the personal computer PC via the interface **105** for communication.

[**0062**] The overall control unit **150** has a luminance determining unit and an exposure amount setting unit for setting exposure control values (shutter speed (SS) and an aperture value). In exposure correction, usually, by calling the exposure setting mode as a function mode of the digital camera **1A** by using the menu display switch **33** and operating the crossed switch **15**, the exposure correction value can be adjusted. A concrete operating method will be described later.

[**0063**] **FIGS. 5A** to **5**E are diagrams for describing setting of an exposure correction value in the exposure setting mode.

[**0064**] First, the user depresses the menu display switch **33**, thereby displaying a selection screen shown in **FIG. 5A** on the LCD **10**. Next, by operating the button SU or SD in the crossed switch **15**, the exposure setting mode is selected as shown in **FIG. 5B**. By depressing the execution button SC, the digital camera **1A** shifts to the screen shown in **FIG. 5C**. In the screen, a correction value can be increased/decreased by 0.3 in the range "from +2to −2" each time the button SU or SD is operated. After the correction value is set to a desired correction value as shown in **FIG. 5**D, the execution button SC is depressed, thereby determining the exposure correction value as "+0.3" (**FIG. 5E**). When the exposure setting mode is set as described above, exposure setting for the exposure correction is made on the basis of an operation input realized by a plurality of operation input actions with the buttons SU, SD and SC in the crossed switch **15**.

[**0065**] For performing a process of recording the captured image, the overall control unit **150** has a filter unit for performing a filtering process and a recording image generating unit for generating a thumbnail image and a compressed image. For reproducing the image recorded on the memory card **8** onto the LCD **10** or EVF **20**, the overall control unit **150** has a reproduction image generating unit for generating a reproduction image.

[**0066**] The filter unit corrects high frequency components of an image to be recorded by a digital filter, thereby correcting the picture quality related to a contour. The recording image generating unit reads image data from the image memory **126** and generates a thumbnail image and a compressed image to be recorded on the memory card **8**. The recording image generating unit reads pixel data every eight pixels in each of the horizontal and vertical directions from the image memory **126** and sequentially transfers the read pixel data to the memory card **8**, thereby recording the thumbnail image onto the memory card **8** while generating the thumbnail image. Further, the recording image generating unit reads all of pixel data from the image memory **126**, performs a predetermined compressing process according to the JPEG method such as two-dimensional DCT or Huffman coding on the pixel data to generate image data of a compressed image, and records the compressed image data into an image area in the memory card **8**.

[**0067**] In the image capturing mode, when image capturing is instructed by the shutter start button **9**, the overall control unit **150** generates a thumbnail image of an image

stored into the image memory **126** after the image capturing instruction and an image compressed according to the JPEG method at a set compression ratio and stores both of the images to the memory card **8** together with information such as tag information (frame number, exposure value, shutter speed, compression ratio, date of photographing, data of on/off state of flash at the time of photographing, scene information, an image determination result, and the like) of the captured image.

[**0068**] In each frame in an image recorded on the memory card **8** via the card I/F **103**, the tag information, image data of high resolution (1600×1200 pixels) compressed in the JPEG method, and image data (80×60 pixels) for displaying a thumbnail are stored.

[**0069**] When the reproduction mode is selected by the mode switch **34**, image data of the largest frame number in the memory card **8** is read and decompressed by the reproduction image generating unit, and the decompressed image is transferred to the LCD VRAM **141** or EVF VRAM **142**. Consequently, an image of the largest frame number, that is, the image captured most recently is displayed on the LCD **10** or EVF **20**. By operating the button SU, an image of the large frame number is displayed. By operating the button SD, an image of the small frame number is displayed.

[**0070**] Operation of Digital Camera **1**A

[**0071**] **FIG. 6** is a flowchart for describing basic operation of the digital camera **1**A. The operation, particularly, as operation in the image capturing mode, is performed by executing the exposure correction value setting program stored in the ROM **151** in the overall control unit **150**.

[**0072**] First, the user turns on the power switch **14** and the image capturing mode is selected by the mode switch **34** (step ST**1**).

[**0073**] In step ST**2**, based on image data obtained by the CCD **303**, a finder image G**1** shown in **FIG. 7** is displayed as a live view on the LCD **10**. When approach of the user is sensed by the eye approach sensor **19**, the LCD **10** is turned off, the EVF **20** is turned on, and the finder image G**1** is displayed on the EVF **20**. In the following, for convenience of description, the case where approach of the user is not detected, that is, the case where the finder image is displayed on the LCD **10** will be described.

[**0074**] In step ST**3**, whether the menu display switch **33** is depressed by the user or not is judged. If YES, the selection screen shown in **FIG. 5A** is displayed on the LCD **10** and the program advances to step ST**4**. If NO, the program advances to step ST**14**.

[**0075**] In step ST**4**, whether the exposure setting mode is selected or not is judged. In this case, as described above, whether or not the exposure setting mode is selected by operating the buttons SU and SD in the crossed switch **15** and the execution button SC is depressed (see **FIG. 5B**). When the exposure setting mode is selected, the program advances to step ST**5** where the exposure setting mode is set. On the other hand, when the exposure setting mode is not selected, the program returns to step ST**1**.

[**0076**] In step ST**6**, whether the exposure correction value is changed by the crossed switch **15** or not is judged. In this case, whether or not the exposure correction value "0" shown in **FIG. 5C** is changed, for example, as shown in **FIG. 5D** by operating the buttons SU and SD in the crossed switch **15** is decided. In the case where the exposure correction value is changed, the program advances to step ST**7**. If not, the program advances to step ST**11**.

[**0077**] In step ST**7**, the exposure correction value is determined. Concretely, by depressing the execution button SC, the exposure correction value is determined as shown in **FIG. 5E**.

[**0078**] In step ST**8**, the exposure setting mode is finished. Concretely, by depression of the menu display switch **33**, the exposure setting mode is canceled.

[**0079**] In step ST**9**, a shutter release operation, that is, an operation of depressing the shutter start button **9** (S2 state) is performed.

[**0080**] In step ST**10**, image capturing operation is performed and a captured image is recorded. To be specific, image data is captured by the CCD **303** and recorded on the memory card **8**. In this case, based on the exposure correction value determined in step ST**7**, an exposure correcting operation is performed.

[**0081**] In step ST**11**, in a manner similar to step ST**8**, the exposure setting mode is finished.

[**0082**] In step ST**12**, a shutter releasing operation is executed in a manner similar to step ST**9**.

[**0083**] In step ST**13**, in a manner similar to step ST**10**, the image capturing operation is performed and a captured image is recorded. Since the exposure correction value is not changed, different from step ST**10**, the image capturing operation is performed in a state where the exposure correction value is "0".

[**0084**] In step ST**14**, whether the display switch button **17** is depressed by the user or not is judged. If YES, the program advances to step ST**15**. If NO, the program returns to step ST**1**.

[**0085**] In step ST**15**, a histogram display mode of displaying a histogram on the LCD **10** is set. Concretely, as shown in **FIG. 8, a** histogram HG**1** (hatched portion) indicative of a luminance distribution of the whole image obtained by the CCD **303** is displayed so as to be superimposed on a finder image G**2**. By the histogram HGI, the user can grasp average luminance of the finder image G**2**.

[**0086**] In step ST**16**, whether the dial **91** is operated by the user or not is judged. If YES, the program advances to step ST**17**. If NO, the program advances to step ST**21**.

[**0087**] In step ST**17**, a changed histogram is displayed. In this case, a histogram is re-generated from a finder image captured under exposure conditions based on the exposure correction value changed by the operation of the dial **91**. For example, when the exposure correction value is changed to the "+side" by the operation of the dial **91**, a histogram HG**2** (hatched portion in **FIG. 9**) which is shifted to the high luminance side from the histogram HG**1** in **FIG. 8**.

[**0088**] By operating the dial **91** as described above, the exposure correction value can be changed in a manner similar to the exposure setting mode. To be specific, interlockingly with setting of the histogram display mode, a function mode capable of making an exposure setting is set in a manner similar to the exposure setting mode, so that

convenience is improved. By the exposure setting made by operating the dial **91**, the number of actions of operation input becomes smaller as compared with that of operation input of selecting the exposure setting mode and changing the exposure correction value by the operation of the crossed switch **15** as in steps ST**4** to ST**6**. Thus, the exposure correction value can be changed promptly and accurately.

[**0089**] The reason why the exposure correction value is changed by employing the complicated operation (action) with the buttons SU, SD and SC in the crossed switch **15** in the exposure setting mode is to prevent erroneous operation by certainly making the user aware of a change in the exposure correction value. In contrast, in the histogram display mode, the operation related to the histogram (luminance distribution) is only the exposure correcting operation of changing the luminance condition, so that the user can be clearly aware of it and there is no possibility of an erroneous operation. Therefore, it is arranged so that the exposure correction value can be changed only a simple operation on the dial **91**.

[**0090**] In step ST**18**, the correction value changed by the dial **91** is determined as an exposure correction value.

[**0091**] In step ST**19**, a shutter release operation is performed in a manner similar to step ST**9**.

[**0092**] In step ST**20**, in a manner similar to step ST**10**, the image capturing operation is performed and a captured image is recorded. In this case, the exposure correcting operation is carried out on the basis of the exposure correction value determined in step ST**18**.

[**0093**] In step ST**21**, whether the display switch button **17** is depressed by the user or not is judged. If YES, the program advances to step ST**22**. If NO, the program advances to step ST**23**.

[**0094**] In step ST**22**, the histogram display mode is finished. Specifically, the display of the histogram HGI is erased from the finder image G**2** shown in **FIG. 8**.

[**0095**] In step ST**23**, a shutter releasing operation is performed in a manner similar to step ST**9**.

[**0096**] In step ST**24**, in a manner similar to step ST**13**, the image capturing operation is performed and a captured image is recorded.

[**0097**] In step ST**25**, whether the user captures another image or not is judged. In this case, whether a mode other than the image capturing mode is selected by the mode switch **34** or not is decided. If a mode other than the image capturing mode is selected, the operation in the image capturing mode is finished. On the other hand, when the user takes another image, the program returns to step ST**1**.

[**0098**] By the above-described operation of the digital camera **1**A, the exposure correction value is changed only by the operation of the dial **91** in the histogram display mode. Consequently, in the case of displaying a luminance distribution regarding a finder image, a simple and prompt exposure setting can be made. On the other hand, in the exposure setting mode, the exposure setting is made by an operation which is more complicated as compared with the exposure setting in the histogram display mode. Thus, the user is certainly made aware of the fact that the operation is regarding the exposure setting, so that erroneous operation can be prevented.

[**0099**] At the time of photographing with flash of the built-in flash **5** in the digital camera **1**A, in the case where the histogram display mode is selected, the user lightly presses the shutter start button **9** (or depresses the AE lock button **18**), thereby allowing the built-in flash **5** to make pre-emission, and a finder image and a histogram may be displayed on the LCD **10**. In this case, it is not indispensable to obtain image data of total pixel number of 2500×1920 of the CCD **303** as image data but image data obtained by reducing the pixels to the number corresponding to the display pixel number of the LCD **10** may be obtained. The user operates the dial **91** in consideration of a histogram displayed and performs image capturing with flashlight.

[**0100**] In the case of using a CCD in which pixels can be combined, the light amount in the pre-emission operation can be decreased according to a pixel addition amount. Concretely, in the case of combining neighboring two pixels, the light amount which is about the half of the light amount in the case where the pixels are not combined is sufficient. Therefore, charge-up time of the built-in flash **5** is shortened so that promptly photographing with flashlight can be realized. A chance to take a good picture can be prevented from being missed. Alternately, by increasing the gain of the AGC circuit in the signal processing circuit **121**, the quantity of pre-emission can be suppressed.

[**0101**] Second Embodiment

[**0102**] Main Components of Digital Camera

[**0103**] **FIGS. 10 and 11** are diagrams each schematically showing the appearance of a digital camera **1**B according to a second embodiment of the present invention. **FIG. 10** is a rear view of the digital camera **1**B. **FIG. 11** is a side view of the digital camera **1**B seen from the left side of **FIG. 10**.

[**0104**] In the rear face of the digital camera **1**B, a liquid crystal display (LCD) **11** similar to that in the digital camera **1**A, a mode dial **12**, an electronic dial **92**, and a point selection dial **93** are provided. On the top face of the digital camera **1**B, a sensitivity setting dial **94** for setting sensitivity is provided.

[**0105**] The mode dial **12** functions as a main switch for turning on/off the power source and also functions as a switch for switching between the image capturing mode (CAMERA mode) and a reproduction mode (PLAY mode) in a manner similar to the digital camera **1**A.

[**0106**] In the camera lens barrel of the digital camera **1**B, an exposure correction button **95** is provided. According to an operation inputted to the exposure correction button **95** (one operation member), either the exposure correction mode or the histogram display mode can be set (which will be described in detail later). With the configuration, an increase in the number of operation members can be suppressed. In addition, since operation inputs regarding the exposure correction mode and the histogram display mode which are related to each other are assigned to the exposure correction button **95**, so that the user can easily understand the operation inputs through intuition and operability is improved.

[**0107**] Further, in the exposure correction mode and the histogram display mode, the exposure correction value can be changed by operation including operation inputs to the electronic dial **92**, that is, the same operation member

(detailed description will be given later). It makes intuitive understanding of the user regarding the operation inputs easier, so that operability is further improved.

[0108] The internal configuration of the digital camera 1B is similar to that in the first embodiment shown in **FIG. 4**. By executing the exposure correction value setting program in the overall control unit **150**, the operation of the digital camera 1B described later is executed.

[0109] Operation of Digital Camera 1B

[0110] **FIG. 12** is a flowchart for describing basic operation of the digital camera 1B.

[0111] In steps ST**31** and ST**32**, operations similar to those in steps ST**1** and ST**2** in **FIG. 6** are performed.

[0112] In step ST**33**, the exposure correction button **95** is depressed by the user.

[0113] In step ST**34**, depression time on the exposure correction button **95** is detected and whether the depression time "t" becomes equal to or longer than predetermined time "a" (for example, two seconds) is judged. If YES, the program advances to step ST**35** and the exposure correction mode is set. On the other hand, when the depression time "t" is shorter than the predetermined time "a", the program advances to step ST**44**. By the operation in step ST**34**, the setting is selectively switched between the setting to the histogram display mode and the setting to the exposure correction mode in accordance with operation time of the exposure correction button **95**.

[0114] In step ST**36**, whether the electronic dial **92** is operated by the user or not is judged. If YES, the program advances to step ST**37**. If NO, the program advances to step ST**40**.

[0115] In step ST**37**, a correction value changed by the electronic dial **92** is determined as an exposure correction value.

[0116] In steps ST**38** and ST**39**, operations similar to those in steps ST**9** and ST**10** shown in **FIG. 6** are performed.

[0117] In step ST**40**, whether or not the exposure correction button **95** has been continuously depressed since the depression started in step ST**33** is judged. In the case where the exposure correction button **95** is being depressed, the program returns to step ST**36**. If the exposure correction button **95** is not depressed, the program advances to step ST**41**.

[0118] In steps ST**41** to ST**43**, operations similar to those in steps ST**11** to ST**13** shown in **FIG. 6** are performed.

[0119] In step ST**44**, the histogram display mode for displaying a histogram on the LCD **11** is set. Concretely, as shown in **FIG. 8**, the histogram HGI (hatched portion) indicative of the luminance distribution of the whole image is displayed so as to be superimposed on the finder image G2.

[0120] In step ST**45**, whether the electronic dial **92** is operated by the user or not is judged. If YES, the program advances to step ST**46**. If NO, the program advances to step ST**50**.

[0121] In step ST**46**, a changed histogram is displayed. For example, when the exposure correction value is changed to the "+side" by the operation of the electronic dial **92**, the histogram HG**2** (hatched portion in **FIG. 9**) shifted to a higher luminance side as compared with the histogram HG**1** of **FIG. 8** is graphically displayed. In the histogram display mode, the exposure correction value is changed by the operation input of one action only to the electronic dial **92**. Consequently, the number of actions of the operation input is smaller than that of the operation input of two actions constructed by the depression of the exposure correction button **95** (step ST**40**) and the operation of the electronic dial **92** (step ST**36**) as in the exposure correction mode. As a result, the exposure correction value can be changed promptly and accurately.

[0122] The reason why the exposure correction value is changed by employing the complicated operation of operating the electronic dial **92** while depressing the exposure correction button **95** in the exposure correction mode is to prevent erroneous operation by certainly making the user aware of a change in the exposure correction value. In contrast, in the histogram display mode, the operation related to the histogram (luminance distribution) is only the exposure correcting operation of changing the luminance condition, so that the user can be clearly aware of it and there is no possibility of an erroneous operation. Therefore, it is arranged so that the exposure correction value can be changed only a simple operation on the electronic dial **92**.

[0123] In step ST**47**, the correction value changed by the electronic dial **92** is determined as an exposure correction value.

[0124] In steps ST**48** and ST**49**, operations similar to those in steps ST**19** and ST**20** shown in **FIG. 6** are performed.

[0125] In step ST**50**, whether the exposure correction button **95** is depressed by the user or not is judged. If YES, the program advances to step ST**51**. If NO, the program advances to step ST**52**.

[0126] In step ST**51**, in a manner similar to step ST**22** shown in **FIG. 6**, the histogram display mode is finished.

[0127] In steps ST**52** and ST**53**, operations similar to those in steps ST**23** and ST**24** shown in **FIG. 6** are performed.

[0128] In step ST**54**, whether the user takes another photograph or not is judged. In this case, whether a mode other than the image capturing mode is selected by the mode dial **12** or not is decided. If a mode other than the image capturing mode is selected, the operation in the image capturing mode is finished. On the other hand, when the user takes another image, the program returns to step ST**31**.

[0129] By the above-described operation of the digital camera 1B, the exposure correction value is changed only by the operation of the electronic dial **92** in the histogram display mode. Consequently, in the case of displaying a luminance distribution regarding a finder image, a simple exposure setting can be made. On the other hand, in the exposure correction mode, the exposure setting is made by an operation which is more complicated as compared with the exposure setting in the histogram display mode. Thus, the user is certainly made aware of the fact that the operation is regarding the exposure setting, so that erroneous operation can be prevented.

[0130] In the case where the digital camera 1B has a moving image capturing mode capable of capturing a mov-

ing image, the exposure setting method may be applied to the moving image capturing. In the following, the operation regarding the moving image capturing will be described.

[0131] **FIG. 13** is a flowchart for describing the operation of the moving image capturing.

[0132] In step ST**51**', the moving image capturing mode is set by the user.

[0133] In steps ST**52**', ST**53**', ST**54**', ST**55** and ST**56**, operations similar to those in steps ST**33** to ST**37** in **FIG. 12** are performed.

[0134] In step ST**57**, it is instructed by the user to start recording a moving image.

[0135] In step ST**58**, the moving image capturing operation is performed and a moving image captured is recorded. In this case, on the basis of the exposure correction value determined in step ST**56**, the exposure correcting operation is performed.

[0136] In step ST**59**, the user instructs to finish the recording of a moving image.

[0137] In steps ST**60** and ST**61**, operations similar to those in steps ST**40** and ST**41** in **FIG. 12** are performed.

[0138] In step ST**62**, in a manner similar to step ST**57**, it is instructed to start recording a moving image.

[0139] In step ST**63**, in a manner similar to step ST**58**, the moving image capturing operation is performed and a captured moving image is recorded. Although the exposure correction value is not changed, different from step ST**58**, the image capturing operation is performed in a state where the exposure correction value is "0".

[0140] In step ST**64**, in a manner similar to step ST**59**, it is instructed to finish the moving image recording.

[0141] In steps ST**65** and ST**66**, operations similar to those in steps ST**44** and ST**45** in **FIG. 12** are performed.

[0142] In step ST**67**, operations similar to steps ST**46** and ST**47** in **FIG. 12** are performed.

[0143] In steps ST**68** and ST**69**, operations similar to those in steps ST**57** and ST**58** are performed.

[0144] In steps ST**70** and ST**71**, operations similar to those in steps ST**50** and ST**51** in **FIG. 12** are performed.

[0145] In steps ST**72** and ST**73**, operations similar to those in steps ST**62** and step ST**63** are performed.

[0146] In step ST**74**, an operation similar to that in step ST**66** is performed. Specifically, when the electronic dial **92** is operated also during capture of a moving image, the program advances to step ST**75** where the histogram is changed and displayed. Consequently, the user can sequentially execute exposure correction by operating the electronic dial **92** while recognizing the histogram during photographing.

[0147] In step ST**75**, operations similar to those in steps ST**67** and ST**69** are performed.

[0148] In step ST**76**, an operation similar to that in step ST**74** is performed.

[0149] In step ST**77**, in a manner similar to step ST**59**, end of recording is instructed.

[0150] In step ST**78**, an operation similar to that in step ST**54** in **FIG. 12** is carried out.

[0151] By the above-described operation of the moving image capturing mode, the exposure correction value is changed only by the operation of the electronic dial **92** in the histogram display mode also during capture of a moving image. Consequently, in the case of displaying a luminance distribution regarding a captured image, a simple and prompt exposure setting can be made. On the other hand, in the exposure correction mode, the exposure setting is made by an operation which is more complicated as compared with the exposure setting in the histogram display mode. Thus, the user is certainly made aware of the fact that the operation is regarding the exposure setting, so that erroneous operation can be prevented.

[0152] Modifications

[0153] In each of the foregoing embodiments, it is not indispensable to perform the exposure control by adjustment of charge accumulation time by the CCD. The exposure control can be also performed by additionally providing a mechanical shutter and adjusting exposure time with the mechanical shutter.

[0154] In each of the foregoing embodiments, a luminance distribution is obtained from pixel information of all of red (R), green (G) and blue (B) in image data and expressed as a histogram or the like. However, the present invention is not limited thereto. Alternately, density information based on pixel values of one color selected from R, G and B, that is, regarding one wavelength range of light may be displayed. Concretely, a component distribution (density distribution) of a wavelength range is displayed. In this case, for example, a menu screen is displayed by operating the menu display switch, and a specific wavelength range in the menu screen is designated. By such density information display, a more-detailed density distribution can be grasped.

[0155] In each of the foregoing embodiments, it is not indispensable to display the luminance distribution by a histogram. The luminance distribution may be displayed by a display form such as a line graph.

[0156] While the invention has been shown and described in detail, the foregoing description is in all aspects illustrative and not restrictive. It is therefore understood that numerous modifications and variations can be devised without departing from the scope of the invention.

What is claimed is:

1. An image capturing apparatus having a plurality of function modes, comprising:

(a) an image capturing part for obtaining a preview image of a subject prior to an image capturing operation;

(b) a display for displaying said preview image;

(c) a mode setting part for setting an image information display mode for displaying information regarding said preview image on said display;

(d) a first exposure setting member for making an exposure setting on the basis of a first input operation when a function mode of said image capturing apparatus is set to said image information display mode; and

(e) a second exposure setting member for making an exposure setting on the basis of a second input operation when a function mode of said image capturing apparatus is set to a predetermined function mode different from said image information display mode, wherein

the number of action(s) of said first input operation by said first exposure setting member is smaller than that of said second input operation by said second exposure setting member.

2. The image capturing apparatus according to claim 1, wherein

said first input operation is constructed by a single input action, and said second input operation is constructed by a plurality of input actions.

3. The image capturing apparatus according to claim 1, wherein

said mode setting part sets an exposure correction mode interlockingly with setting of said image information display mode.

4. The image capturing apparatus according to claim 1, wherein

said second exposure setting member has an operation member for setting an exposure correction mode, and

said mode setting part sets said image information display mode in response to an input operation on said operation member.

5. The image capturing apparatus according to claim 4, further comprising:

(f) an operation time detector for detecting operation time on said operation member, wherein

said mode setting part switches between said image information display mode and said exposure correction mode in accordance with said operation time detected by said operation time detector.

6. The image capturing apparatus according to claim 4, wherein

said first input operation and said second input operation include an input action to a same operation member.

7. The image capturing apparatus according to claim 1, wherein

luminance information of said preview image is displayed in said image information display mode.

8. The image capturing apparatus according to claim 1, wherein

density information of said preview image is displayed in said image information display mode.

9. An exposure setting method in an image capturing apparatus having a plurality of function modes, comprising the steps of:

(a) obtaining a preview image of a subject prior to an image capturing operation;

(b) displaying said preview image on a display;

(c) setting an image information display mode for displaying information regarding said preview image on said display;

(d) making an exposure setting on the basis of a first input operation when a function mode of said image capturing apparatus is set to said image information display mode; and

(e) making an exposure setting on the basis of a second input operation when a function mode of said image capturing apparatus is set to a predetermined function mode different from said image information display mode, wherein

the number of action(s) of said first input operation by said first exposure setting member is smaller than that of said second input operation by said second exposure setting member.

10. The exposure setting method according to claim 9, wherein

said first input operation is constructed by a single input action, and said second input operation is constructed by a plurality of input actions.

11. The exposure setting method according to claim 9, further comprising the step of:

(f) setting an exposure correction mode interlockingly with setting of said image information display mode.

12. The exposure setting method according to claim 9, wherein

said second input operation includes an input action performed by an operation member for setting an exposure correction mode, and

said image information display mode is set in response to an input operation on said operation member.

13. The exposure setting method according to claim 12, further comprising the steps of:

(g) detecting operation time on said operation member; and

(h) making a switching between said image information display mode and said exposure correction mode in accordance with said operation time detected in said step (g).

14. The exposure setting method according to claim 12, wherein

said first input operation and said second input operation include an input action to a same operation member.

15. An image capturing apparatus comprising:

(a) an image capturing part for obtaining a preview image of a subject prior to an image capturing operation in a moving image capturing mode;

(b) a display for displaying said preview image; and

(c) a controller for displaying image information regarding said preview image onto said display.

16. The image capturing apparatus according to claim 15, wherein

said image information includes luminance information of said preview image.

17. The image capturing apparatus according to claim 15, wherein

said image information includes density information of said preview image.

18. The image capturing apparatus according to claim 15, further comprising:

(d) an exposure setting member for making an exposure setting on the basis of said image information displayed on said display.

19. The image capturing apparatus according to claim 18, wherein

an exposure setting is made by said exposure setting member, a moving image is captured and recorded and, after that, said image information changed by said exposure setting is displayed on said display.

* * * * *