US006151171A

United States Patent [19]

Kenin et al.

[11] **Patent Number: 6,151,171**

[45] **Date of Patent: Nov. 21, 2000**

[54] **ZOOM ASSEMBLY HAVING ZOOM LENS WITH PLURALITY OF LENS GROUP THAT MOVE TOGETHER OR DIFFERENTIALLY FOR ZOOMING AND FOCUSING**

[75] Inventors: **Michael Kenin**, Rochester; **James A. Schmieder**, Wayland; **Mark D. Bedzyk**, Rochester; **William T. Goosey**, Fairport; **Dean A. Johnson**, Churchville, all of N.Y.

[73] Assignee: **Eastman Kodak Company**, Rochester, N.Y.

[21] Appl. No.: **09/281,898**

[22] Filed: **Mar. 31, 1999**

[51] **Int. Cl.**[7] **G02B 15/14**

[52] **U.S. Cl.** **359/684**; 359/676; 359/685; 359/689; 359/691; 359/695; 359/696; 359/697; 359/701

[58] **Field of Search** 359/676, 684, 359/685, 689, 691, 695, 696, 701, 697

[56] **References Cited**

U.S. PATENT DOCUMENTS

4,002,405	1/1977	Stahl	359/697
4,198,129	4/1980	Vockenhuber .	
4,848,884	7/1989	Enomoto	359/696
4,854,682	8/1989	Yamanashi	359/689
4,963,006	10/1990	Inadome	359/684
5,069,536	12/1991	Ogata	359/689
5,144,490	9/1992	Yamanouchi	359/694
5,170,294	12/1992	Haraguchi et al.	359/697
5,194,991	3/1993	Yamanashi	359/693
5,450,242	9/1995	Kohmoto et al.	359/676
5,572,365	11/1996	Ito	359/684
5,646,790	7/1997	Kohmoto et al.	359/689
5,726,810	3/1998	Meyers	359/684
5,825,556	10/1998	Meyers	359/690
5,838,500	11/1998	Ito et al.	359/689
5,999,330	12/1999	Goosey, Jr.	359/689
6,028,714	2/2000	Koyama	359/695
6,064,533	5/2000	Kenin et al.	359/695

Primary Examiner—Georgia Epps
Assistant Examiner—Evelyn A. Lester
Attorney, Agent, or Firm—Svetlana Z. Short

[57] **ABSTRACT**

It is an object of the present invention to provide a very compact zoom assembly with a minimum number of parts. Another object of this invention is to provide a zoom assembly which does not require guide rods and utilizes with only one motor for both zooming and focusing. Briefly summarized, according to one aspect of the present invention, a zoom assembly includes a zoom lens defining an optical axis. This zoom lens is capable of operating in a plurality of different zoom positions and of focus adjustment for different object distances in each of the zoom positions. The zoom positions are (i) two extreme zoom positions (a wide angle position and a telephoto position), and (ii) a plurality of intermediate zoom positions. The zoom lens includes at least a first movable lens group and a second movable lens group. These first and second lens group are separated from one another by a variable distance. The first and second movable lens groups move (i) together, at the same speed and direction in order to focus at one of the extreme zoom positions and at an adjacent intermediate zoom position; and (ii) differentially in order to focus at another one of the extreme zoom positions.

20 Claims, 11 Drawing Sheets

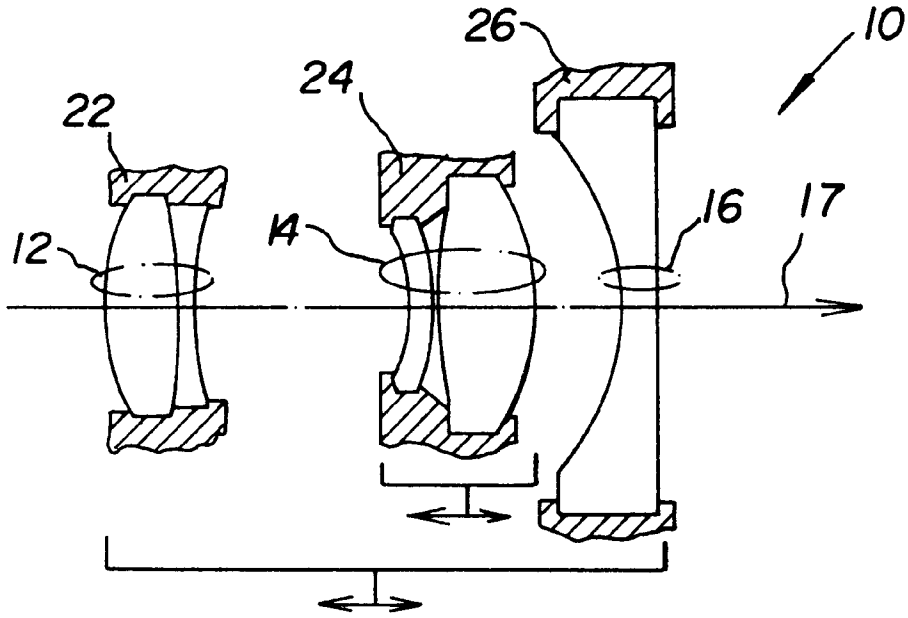

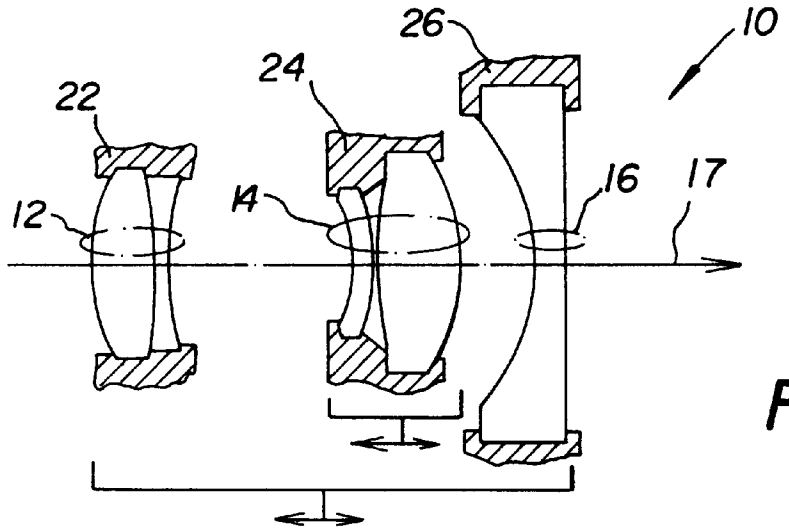
10
26
24
22
16
17
14
12

Fig. 1

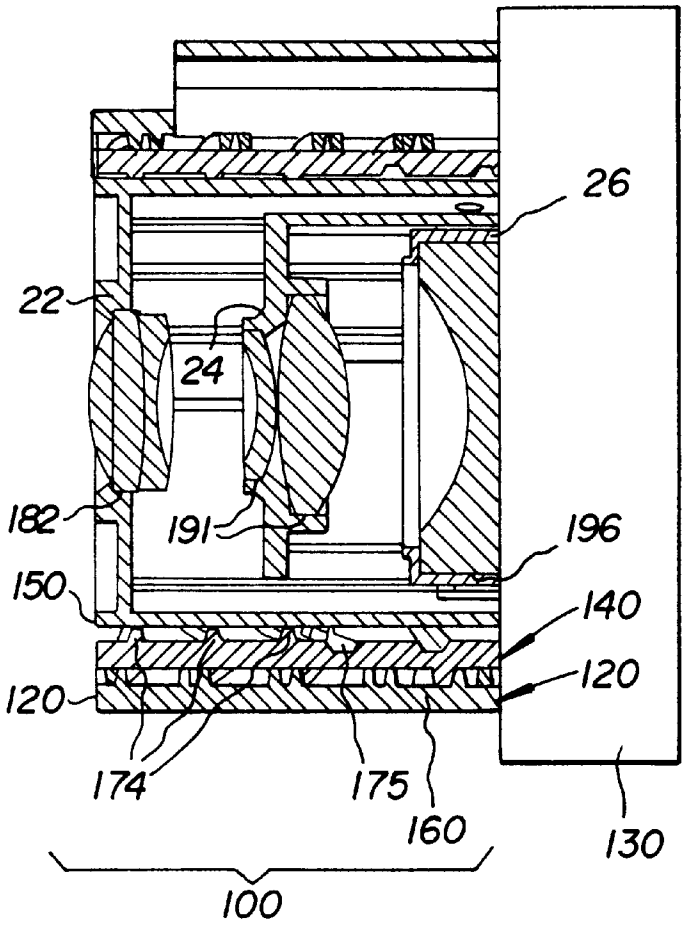
26
22
24
182
191
196
150
140
120
120
174
175
160
130
100

Fig. 2A

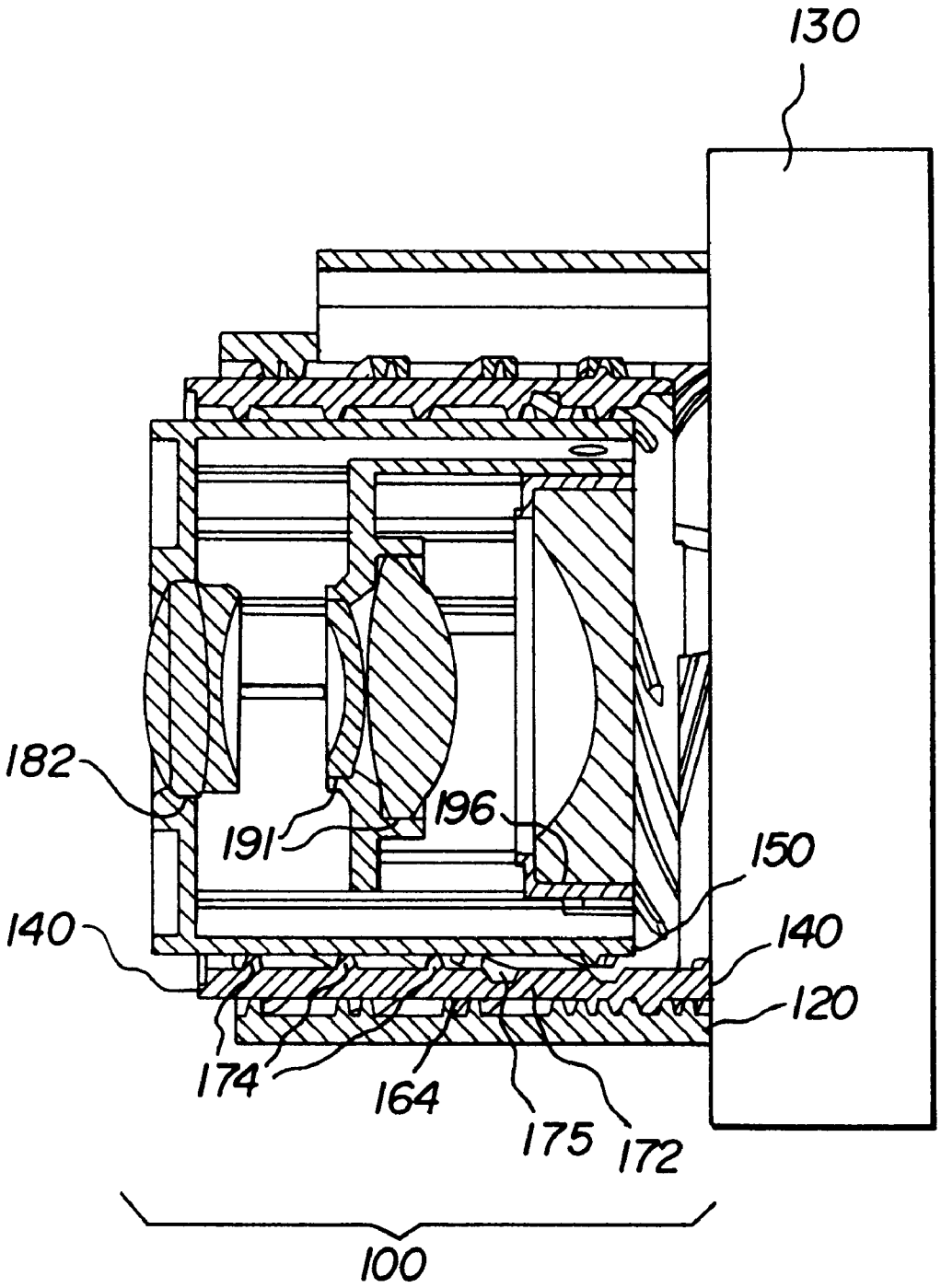

Fig. 2B

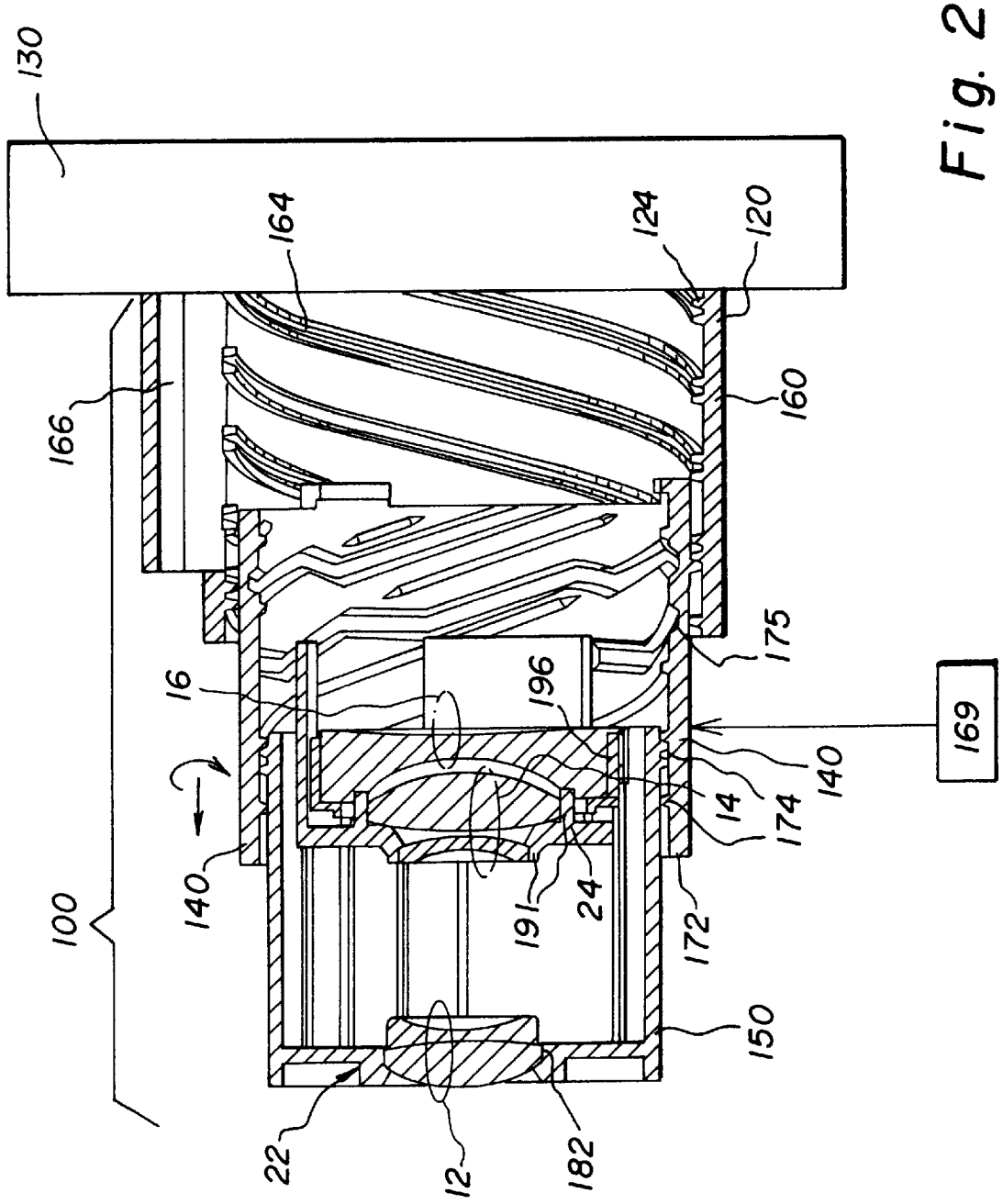
130
164
124
120
166
160
175
16
196
169
140
14
174
140
100
191
24
172
150
22
12
182

Fig. 2C

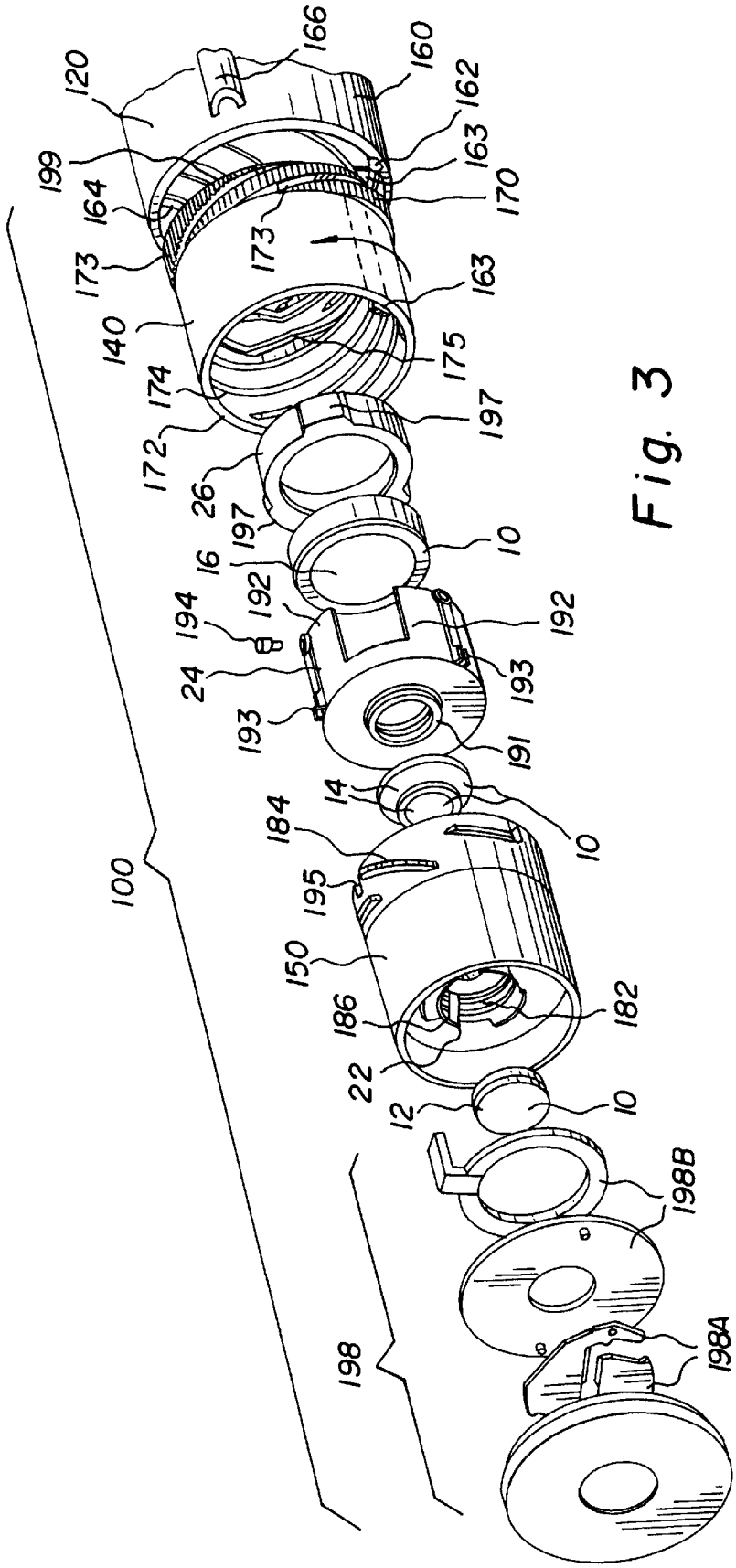
166
160
120
162
163
199
170
164
173
173
163
140
175
174
197
172
26
197
10
16
192
194
192
24
193
193
191
14
10
184
100
195
150
186
182
22
12
10
198B
198
198A

Fig. 3

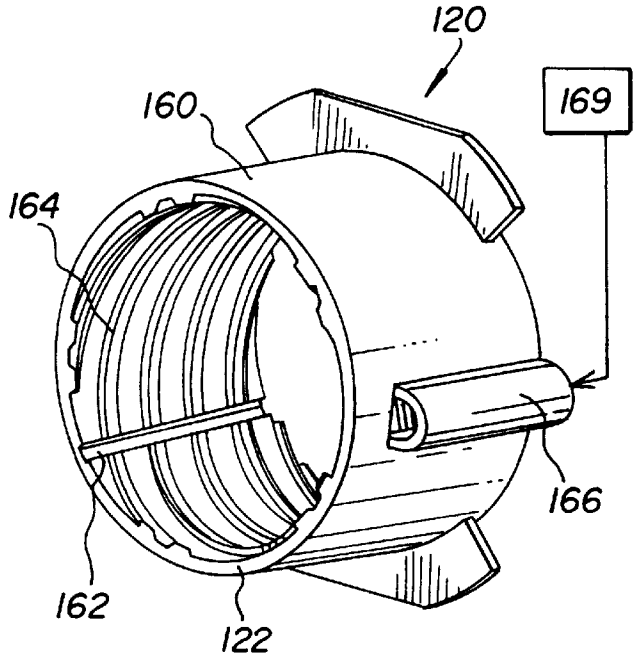

Fig. 4A

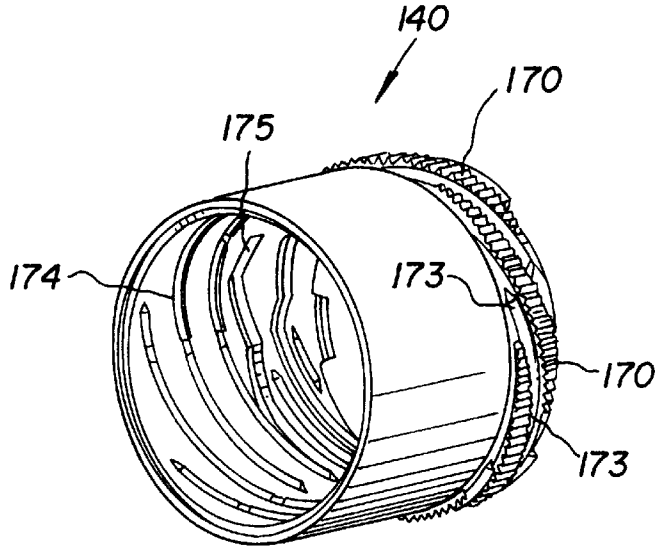

Fig. 4B

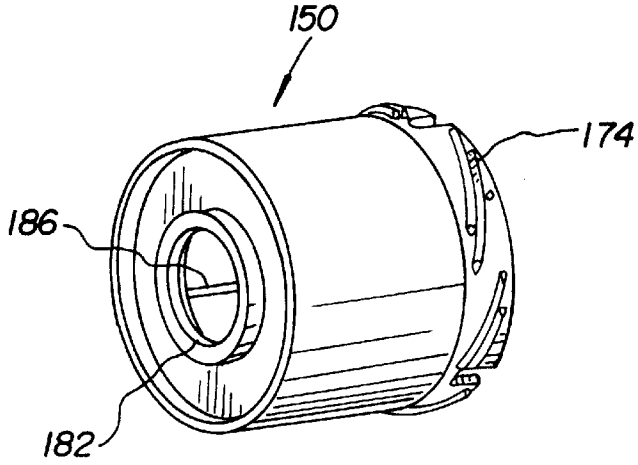

Fig. 4C

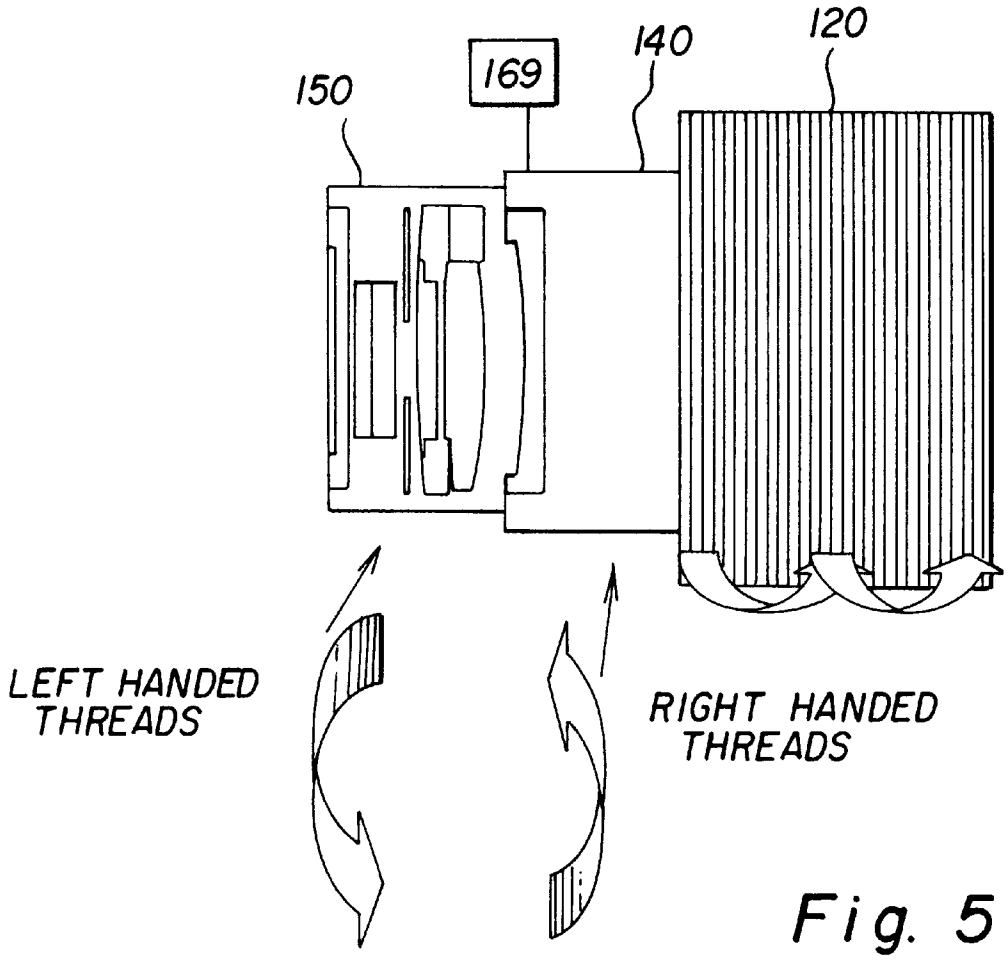
150
169
140
120
LEFT HANDED THREADS
RIGHT HANDED THREADS

Fig. 5

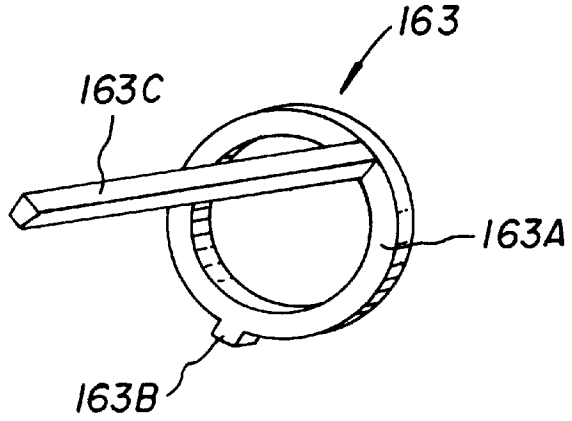
163
163C
163A
163B

Fig. 6

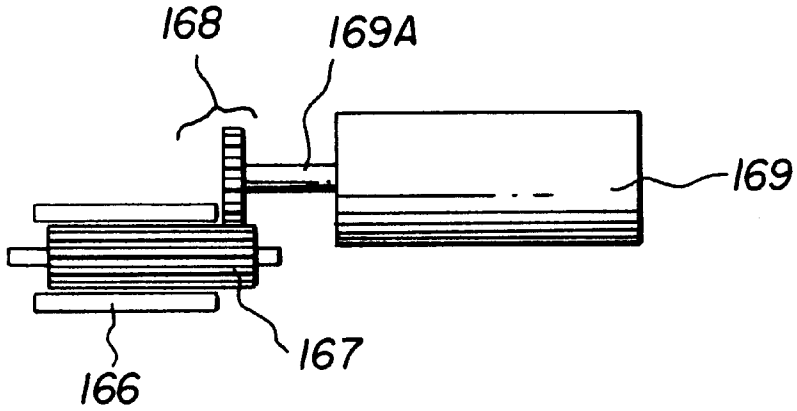

Fig. 7

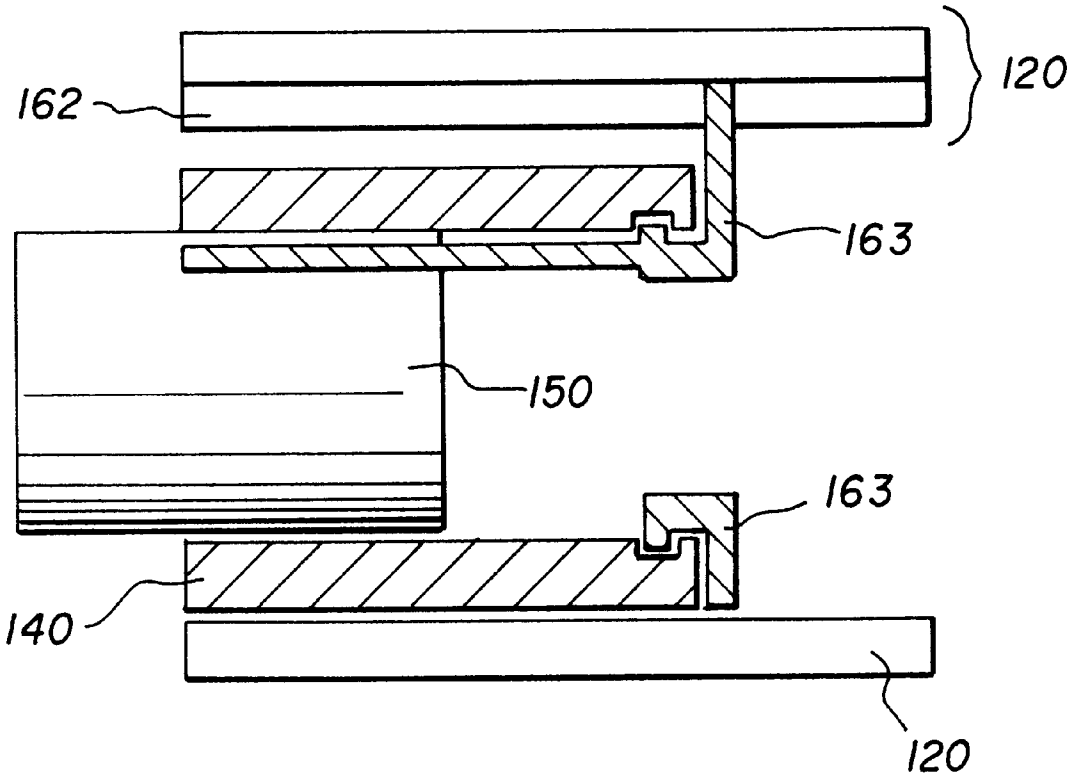

Fig. 8

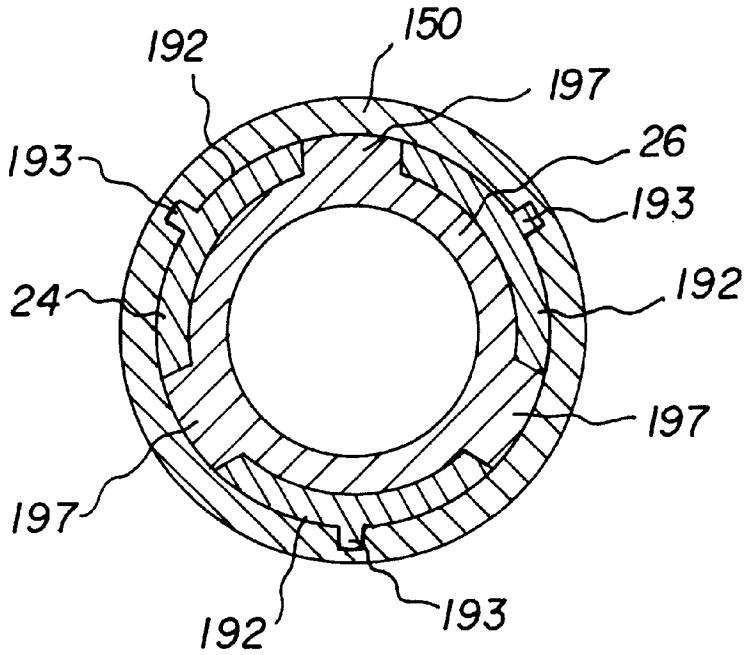

Fig. 9

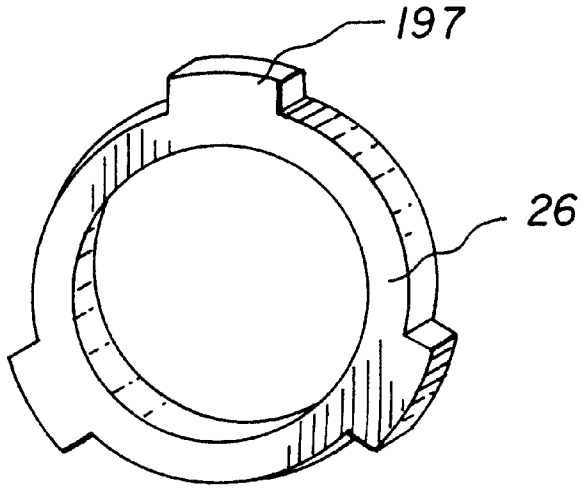

Fig. 11

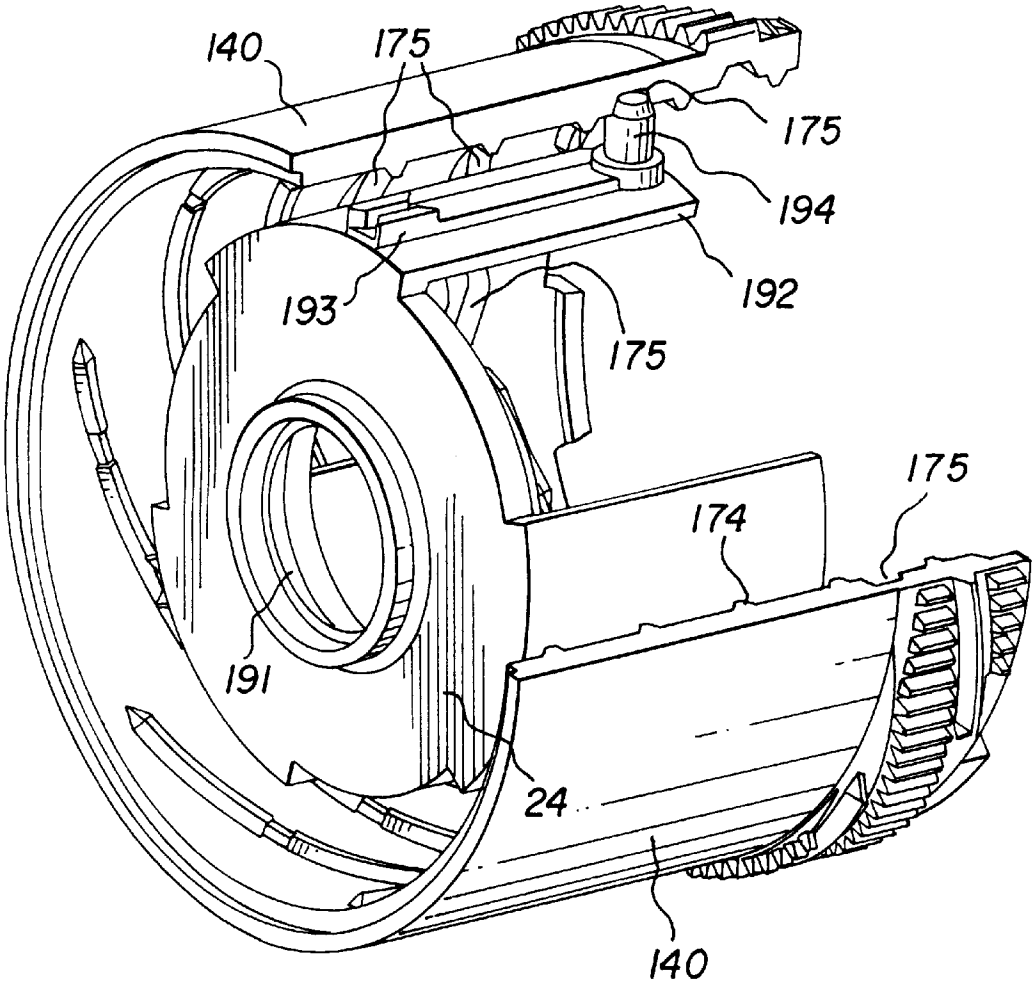

Fig. 10

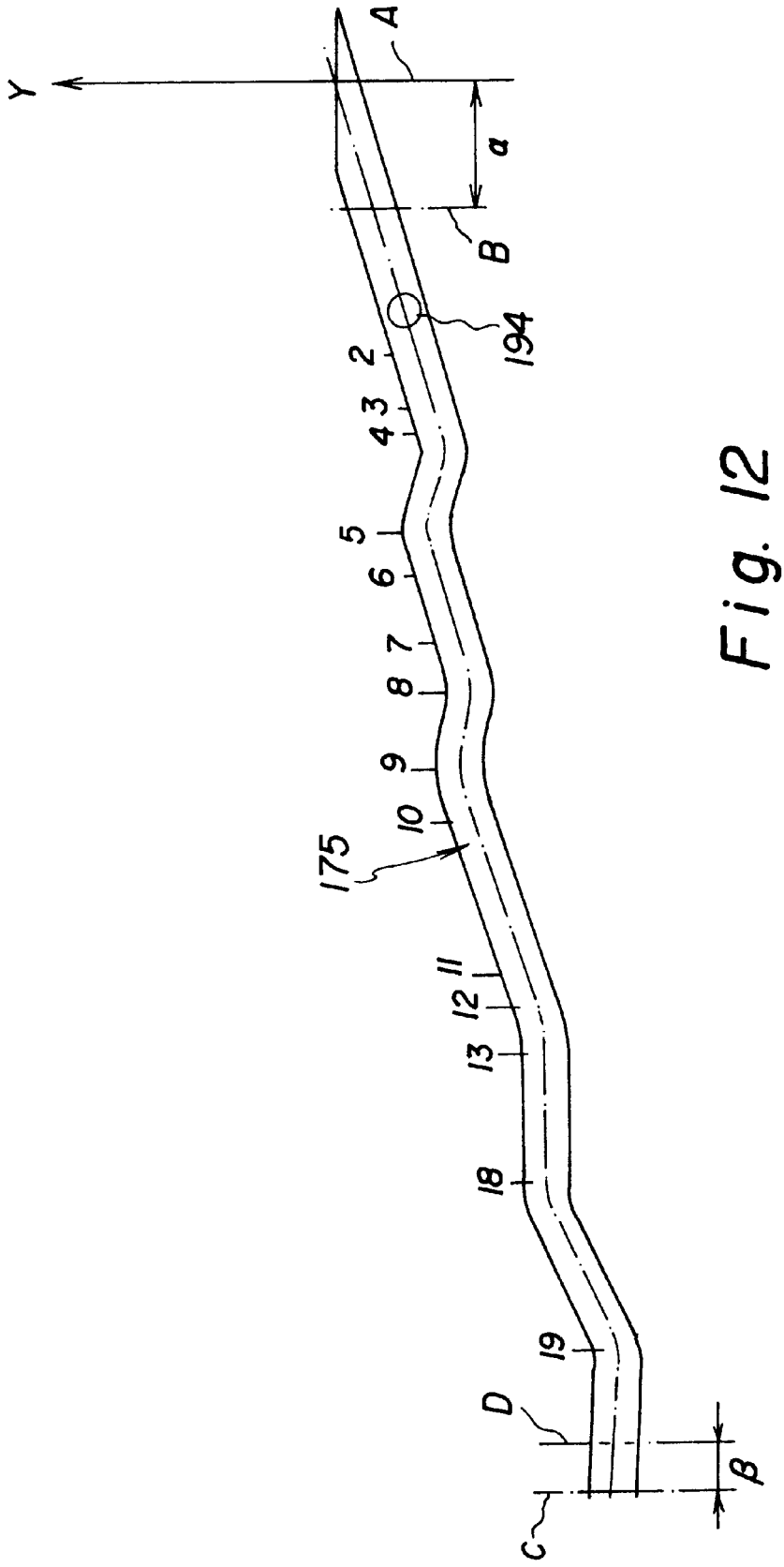

Fig. 12

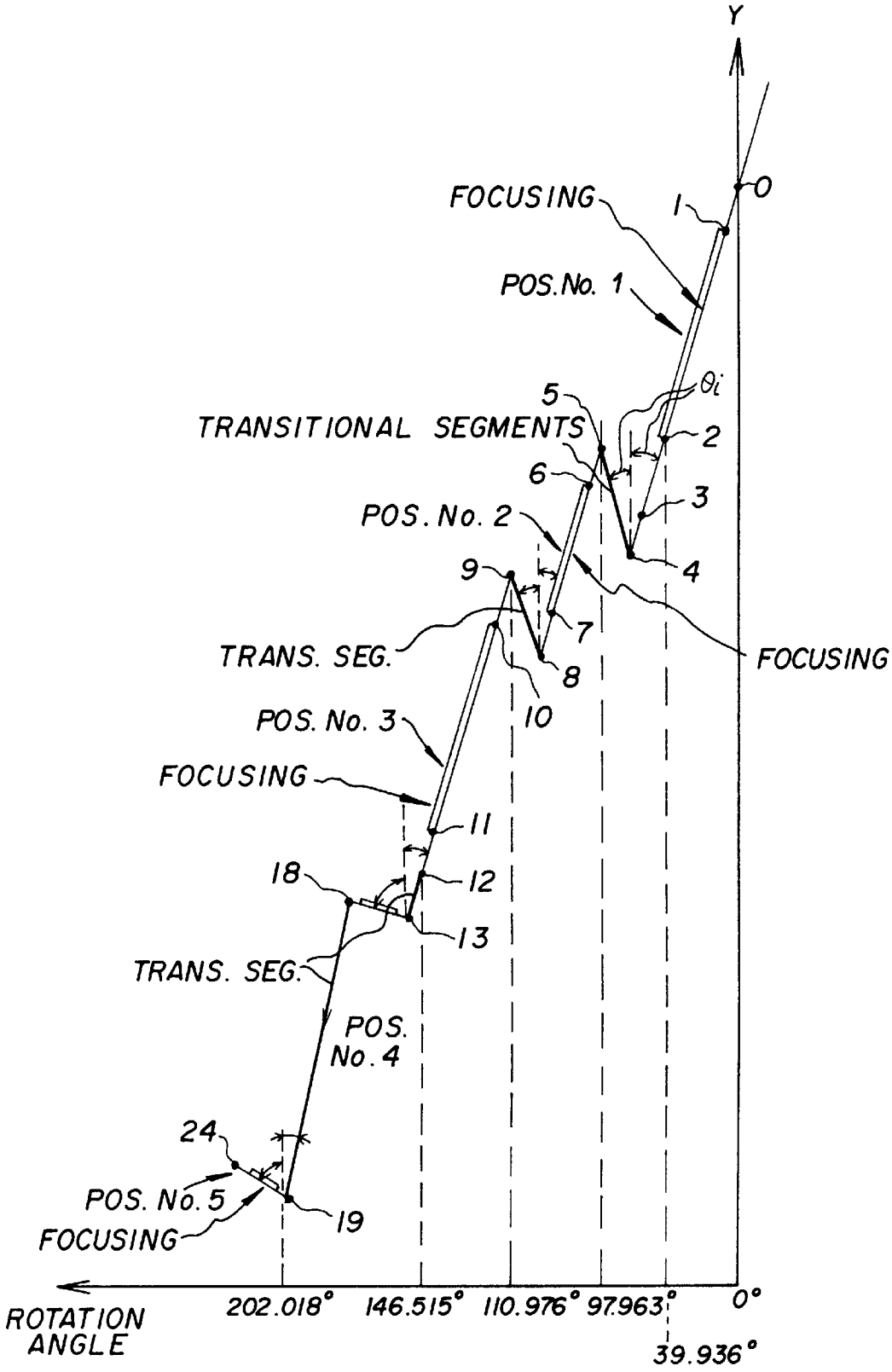
Y
FOCUSING
1
0
POS.No. 1
5
θ_i
TRANSITIONAL SEGMENTS
2
6
3
POS. No. 2
4
9
7
TRANS. SEG.
8
FOCUSING
10
POS. No. 3
FOCUSING
11
18
12
13
TRANS. SEG.
POS. No. 4
24
POS. No. 5
19
FOCUSING
ROTATION ANGLE
202.018°
146.515°
110.976°
97.963°
0°
39.936°

Fig. 13

ZOOM ASSEMBLY HAVING ZOOM LENS WITH PLURALITY OF LENS GROUP THAT MOVE TOGETHER OR DIFFERENTIALLY FOR ZOOMING AND FOCUSING

CROSS REFERENCE TO RELATED APPLICATIONS

Reference is made to commonly assigned, U.S. patent application Ser. No. 09/282,997, entitled A ZOOM ASSEMBLY, by Kenin et al, now U.S. Pat. No. 6,064,533; and U.S. patent application Ser. No. 09/281,879, entitled A ZOOM ASSEMBLY HAVING AN IMPROVED CAM BARREL by Kenin et al (allowed), filed concurrently herewith.

FIELD OF THE INVENTION

The present invention relates a zoom assembly containing at least two movable lens cells, where the front lens cell moves at one rate and another lens cell moves at a different rate in response to the rotary drive force.

BACKGROUND OF THE INVENTION

Recently, there have been an interest in producing inexpensive, compact, light weight and reliable zoom cameras with a zoom ratios of greater than 1.5× that provide an excellent image quality over the entire zoom range for the objects that are located both short and long distances away.

U.S. Pat. Nos. 5,825,556 and 5,726,810 disclose zoom lenses for such a camera. These zoom lenses are very compact and have only five lens elements arranged into three moving groups: a front, positive power lens group, a middle, positive power lens group, and a rear, negative power lens group. The front and the rear lens groups move in unison-i.e., at the same speed and direction, while the middle lens group moves at a different rate. U.S. Pat. No. 5,726,810 discloses that the lens mounts for the front and rear lens groups are attached to a lens barrel and that the mount for the middle lens group slides along the guide rods mounted inside this lens barrel. U.S. Pat. No. 5,825,556 does not disclose a mechanism for moving the lens groups.

U.S. Pat. No. 4,198,129 discloses a zoom assembly with a zoom lens that has at least four lens groups. Three of the lens groups are movable. In one embodiment, two of the three movable lens groups are situated in the lens barrels that are linked and move parallel to one another. The remaining lens barrel, supporting the third lens group, is sandwiched between the two linked lens barrels and is either stationary or moves at the same rate and direction as the above described linked lens barrels. Because of this construction, the zoom assembly utilizes at least one additional stationary lens group. However, having four or more lens groups results in a large size zoom assembly and increases its cost.

In addition, in order to move lens groups relative to one another, the zoom assembly disclosed in U.S. Pat. No. 4,198,129 utilizes three stepper motors and a plurality of guide rods. If these guide rods are not aligned perfectly with respect to one another and the rest of the zoom assembly, the lens barrels will not move properly and, may even stop moving altogether. Finally, stepper motors are relatively expensive, and having three such motors not only significantly increases the cost of the zoom assembly, but also makes this zoom assembly bulky and heavy.

U.S. Pat. No. 5,194,991 discloses a zoom assembly having a zoom lens that has three moving lens groups. This zoom lens is capable of micro photography. In order to

accomplish zooming from the wide angle position to the telephoto position each of the lens groups moves at a different rate with respect to the other lens groups. The zooming action is accomplished by a cam sleeve that has three differently configured cam grooves. Each of the cam grooves has segments of different slopes but the sign of the slopes does not change. Because these cam grooves require three sets of cam followers (one for each lens group), this zoom assembly is relatively difficult to align and assemble, resulting in higher cost of production.

This patent also discloses that the second lens group moves along a rod. If this rod is not aligned perfectly with respect to the rest of the zoom assembly, the lens barrels will not move properly and, may jam and stop moving altogether. Furthermore, the disclosed mechanism utilizes an additional focusing motor for focus adjustment, making this zoom assembly expensive to manufacture.

U.S. Pat. No. 5,646,790 also discloses a zoom assembly mechanism with three moving lens barrels. The patent discloses three differently shaped cam profiles that enable the three lens groups to move relative to one another. This configuration requires three sets of cam followers (each set corresponding to a different lens group), resulting in either a (i) tolerance buildup and thus a relatively expensive alignment and assembly, or (ii) in tighter tolerance requirements and, thus, higher manufacturing costs.

SUMMARY OF THE INVENTION

It is an object of the present invention to provide a very compact zoom assembly with a minimum number of parts. Another object of this invention is to provide a zoom assembly which does not require guide rods and utilizes with only one motor for both zooming and focusing.

Briefly summarized, according to one aspect of the present invention, a zoom assembly includes a zoom lens defining an optical axis. This zoom lens is capable of operating in a plurality of different zoom positions and of focus adjustment for different object distances in each of the zoom positions. The zoom positions are (i) two extreme zoom positions (a wide angle position and a telephoto position), and (ii) a plurality of intermediate zoom positions. The zoom lens includes at least a first movable lens group and a second movable lens group. These first and second lens group are separated from one another by a variable distance. The first and second movable lens groups move (i) together, at the same speed and direction in order to focus at one of the extreme zoom positions and at an adjacent intermediate zoom position; and (ii) differentially in order to focus at another one of the extreme zoom positions.

According to an embodiment of the present invention, the first and second lens groups move:

(a) together, at the same speed and direction to focus at the wide angle position;

(b) differentially to transition from the wide angle position to a first intermediate zoom position;

(c) together, at the same speed and direction to focus at the first intermediate zoom position;

(d) differentially to transition from the first intermediate zoom position to a second intermediate zoom position;

(e) together, to focus at the second intermediate zoom position;

(f) differentially, to focus at a third intermediate zoom position;

(g) differentially to focus at the zoom position adjacent to the third intermediate zoom position.

The above, and other objects, advantages and novel features of the present invention will become more apparent from the accompanying detailed description thereof when considered in conjunction with the following drawings.

BRIEF DESCRIPTION OF THE DRAWINGS

FIG. **1** illustrates a zoom lens;

FIG. **2**A is a cross sectional view of a zoom assembly of the first embodiment of the present invention, when the zoom assembly is in a parked position. This zoom assembly incorporates the zoom lens of FIG. **1**;

FIG. **2**B is a cross sectional view of the zoom assembly of FIG. **2**A when the zoom assembly is in a wide angle position;

FIG. **2**C is a cross sectional view of the zoom assembly of FIG. **2**A when the zoom assembly is in a telephoto position;

FIG. **3** is an exploded view of the zoom assembly of FIG. **1**A;

FIG. **4**A is a perspective view of a frame barrel of the zoom assembly of FIG. **1**A;

FIG. **4**B is a perspective view of a deployment barrel of the zoom assembly of FIG. **1**A;

FIG. **4**C is a perspective view of a front barrel of the zoom assembly of FIG. **1**A;

FIG. **5** illustrates, schematically, orientation of the helical threads on the three lens barrels of the zoom assembly of FIG. **3**;

FIG. **6** illustrates the key used in a deployment barrel shown in a zoom assembly of FIG. **3**;

FIG. **7** is a schematic depiction of a motor of the zoom assembly of FIG. **3**;

FIG. **8** is a schematic cross sectional view of the front barrel when the front barrel is positioned inside the frame barrel;

FIG. **9** illustrates schematically how a mid-lens cell fits inside a rear lens cell;

FIG. **10** depicts a mid-lens cell with a cam follower engaging a cam groove of the deployment barrel;

FIG. **11** illustrates a rear lens cell of the zoom lens assembly;

FIG. **12** illustrates the cam profile of the deployment barrel; and

FIG. **13** illustrates the relationship between the cam position and the rotation angle of the deployment barrel.

DETAILED DESCRIPTION OF THE INVENTION

The present description will be directed in particular to elements forming part of, or in cooperation more directly with, the apparatus in accordance with the present invention. It is understood that elements not specifically shown or described may take various forms well known to those skilled in the art.

Zoom Assembly Apparatus

Referring now to FIG. **1**, a zoom lens **10** is depicted including the front, middle and rear lens groups **12**, **14**, **16**, respectively disposed for movement along the optical axis **17**. The front lens group **12** is situated inside a first lens cell **22**, the middle lens group **14** is situated inside a mid-lens cell **24** and the rear lens group **16** is situated inside a rear lens cell **26** of a zoom assembly **100**. During zooming, the middle lens group **14** moves along an optical axis **17**, relative to the front and rear lens groups **12**, **16**. The front and rear lens groups **12**, **16** move as a unit, i.e., they do not move relative to one another.

An example of a zoom lens **10** is provided below. The zoom lens **10** of this example provides 2.5× zoom ratio and comprises the front, positive power lens group **12**, the middle, positive power lens group **14** and the rear, negative power lens group **16**. The numerical data for the zoom lens **10** is provided in tables 1A–1C. In these tables R_i stands for the radius of curvature of the i-th surface, N_e stands for the index of refraction and ν stands for the Abbe V-number of the refractive material.

TABLE 1A

Surface	Radius	Thickness (T)	N_e	ν
R_1	10.957	3.26	1.606	43.9
R_2	−56.7590	1.0		
R_3	19.858	4.0	1.762	26.5
Aperture Stop		S_2 = Variable		
R_4	−7.718	1.0	1.497	81.6
R_5	−12.647	0.25		
R_6	25.924	4.474	1.502	56.28
*R_7	−10.179	S_4 = Variable		
*R_8	−10.213	1.70	1.586	60.72
R_9	207.317	S_5 = Variable		
	Image Plane			

*Asphere

TABLE 1B

Aspheric Coefficients	Surface R_7	Surface R_8
AD	$0.55158\ e^{-4}$	$0.16177\ e^{-3}$
AE	$0.93444\ e^{-5}$	$0.310329\ e^{-5}$
AF	$-0.69206\ e^{-6}$	$-0.22765\ e^{-6}$
AG	$0.24416\ e^{-7}$	$0.79975\ e^{-8}$
AH	$-0.42091\ e^{-9}$	$-0.14109\ e^{-9}$
AI	$0.27688\ e^{-11}$	$0.61400\ e^{-12}$
AJ		$0.12934\ e^{-13}$
AK		$-0.12741\ e^{-15}$
K	−1.07394	−0.23112

Where k is a conic constant.

Wavelengths (μm)		
λ_1	λ_2	λ_3
0.5461	0.4861	0.6563

TABLE 1C

Zoom Spacing Data				
Zoom Position #	S_2	S_4	BFL	EFL
1 (wide)	2.219	7.494	8.69	30.9
2	4.211	5.502	13.74	38.29
3	5.940	3.773	19.90	47.44
4	7.432	2.281	27.44	58.78
5 (telephoto)	8.713	1.000	36.68	72.82

BFL is the back focus distance and, EFL is the focal length.

STOP Diameter	
Zoom Position #	Diameter
1 (wide)	4.94
2	5.46
3	6.06
4	6.71
5 (telephoto)	7.44

Zoom lens **10** has two aspheric surfaces. The aspheric equation describing these aspheric surfaces is:

$$X = \frac{CY^2}{1+\sqrt{1-(k+1)C^2Y^2}} + ADY^4 + AEY^6 + AFY^8 + AGY^{10} + AHY^{12} + AIY^{14} + AJY^{16} + AKY^{18}$$

where:

X is the distance along the optical axis OA;

Y is the height from the optical axis;

C is the reciprocal of the vertex radius of curvature of the curved lens surface;

k is the conic constant; and AD through AK are aspheric coefficients of 4th, 6th, 8th, 10th, 12th, 14th, 16th, and 18th order. The values of the aspheric coefficients for the various aspheric lens surfaces for the lens embodiment are provided in Table 1B.

More specifically, the aspheric surfaces are located on the surfaces with radii R_1, R_8 and R_9 associated with lens elements E_1, E_4 and E_5.

According to one embodiment of the present invention, the zoom assembly **100** (shown in FIGS. **2A–2C** and **3**) includes a frame barrel **120** (FIG. **4A**), situated next to a camera body **130**, a movable deployment barrel **140** (FIG. **4B**), and a front barrel **150** (FIG. **4C**). The deployment barrel **140** moves with respect to the frame barrel **120** by utilizing left and right handed helical threads (FIG. **5**). The front lens cell **22**, the mid-lens cell **24** and the rear lens cell **26** are situated inside the front lens barrel **150**. The front lens cell **22** and the rear lens cell **26** are either molded with, or are fixedly attached to the front barrel **150** and are, therefore, stationary relative each other and to the front barrel **150**. When a rotary force is applied to the deployment barrel **140**, the mid-lens cell **24** moves within the front barrel **150** relative to the front and the rear lens cells **22**, **26**.

The frame barrel **120** is stationary and comprises a sleeve **160** that has a linear, directional guide slot **162** (FIGS. **3A** and **4A**) for a key **163**, (shown in FIGS. **3A** and **6**). This key is described later on in the specification. The sleeve **160** also includes internal helical threads **164** for engagement of the external helical threads **173** of a smaller diameter deployment barrel **140**. The frame barrel **120** also includes a support sleeve **166** encasing a long spur gear **167** which is operatively connected through a gear train **168** to the rotating shaft **169A** of the reversible motor **169**. (See FIG. **7**). It is preferred that the motor **169** be a DC motor rather than a stepper motor, because DC motors are less expensive than stepper motors. The long spur gear **167** rotates the deployment barrel **140** by engaging with an external gear segment **170**, described below.

The deployment barrel **140** (see FIGS. **3** and **4B**) is movable and is, at least partially, enclosed by the frame barrel **120**. The key **163** (see FIGS. **3**, **6**, and **8**) is attached to the deployment barrel **140** and prevents the front barrel **150** from rotating around the optical axis. The key **163** is in a form of a ring **163A** with a protrusion **163B** and a long arm **163C**. The long arm **163C** is attached to the internal surface of the deployment barrel **140**. The protrusion **163B** of the key **163** slides inside the guide slot **162** of the frame barrel **120** when the deployment barrel **140** rotates and translates along the optical axis. The key **163** is attached to the deployment barrel **140** in a manner that allows the deployment barrel **140** to rotate around the key, while the key is prevented from rotation by the slot **162** inside the frame barrel **120**. This is shown in FIG. **8**.

The deployment barrel **140** comprises a single sleeve **172**. The sleeve **172** contains external segmented helical male threads **173** for engaging the internal helical female threads **164** of the smaller diameter frame barrel **120**. (See FIG. **3**). The segmented threads **173** also include gear profiles forming the gear section **170**. This gear section **170** is engaged to the spur gear **167**. Thus, the deployment barrel **140** moves with respect to the frame barrel **120** when the motor **169** is activated. The gear section **170** and the helical threads **173** are molded as an integral part of the deployment barrel **140**. The motor **169** is energizable by an output from an associated pulse generator unit (not shown), such as a microprocessor, for example.

The sleeve **172** of the deployment barrel **140** also includes the internal helical female threads **174** which engages the external helical male segmented threads of the front barrel **150**. This is also shown in FIG. **3**. The sleeve **172** also contains three identical, continuous internal cam grooves **175** which enable relative movement of the middle lens cell **24** with respect to the front and rear lens cells **22**, **26**. Having only one sleeve with only one set of cam grooves decreases the complexity and the cost of the zoom assembly by decreasing the number of separately movable parts. In addition to the zooming function, the camming action provides the focusing function, eliminating the need for a separate focusing motor. That is, the rotary force provided by the motor **169** enables the zoom lens **10** to zoom as well as to focus. More specifically, while moving from the wide angle to the telephoto position, the zoom lens **10** is focused on objects located within range from infinite distance to the short distance by moving either the whole zoom lens **10** as a unit, or by moving the middle lens group **14** relative to the front and rear lens groups **12**, **16**. Because this approach eliminates the need for a separate focusing motor it results in a zoom assembly that is very small size and lightweight. The details of the cam grove profile are described later in the specification.

The front barrel **150** (see FIG. **4C**) is movable along the optical axis and does not rotate. The front barrel **150** contains the front lens cell **22** which is (plastic) molded integrally therewith and a mid-lens cell **24**. The front lens cell **22** has lens seats **182** for the lens elements of the front (object side) lens group **12**. The front barrel **150** also includes external segmented helical threads **184** for engaging complimentary threads **174** of the deployment barrel **140** and a plurality of internal straight linear grooves **186**. (See FIG. **3** and FIG. **4C**). The function of the grooves **186** is described later on in the specification. A shutter assembly (not shown) is located inside the front barrel **150** and is operatively connected to the mid-lens cell **24**.

The mid-lens cell **24** has lens seats **191** (shown in FIGS. **2A–2C**) that provide support for the mid-lens group **14** and also includes, on its external surface, a plurality of extended segments **192** with pads **193** and a plurality of pins **194**. (See FIGS. **3**, **9** and **10**.) It is preferable that at least three pins **194**

be used. The three pins define a plane through the mid-lens cell **24** and allow the mid-lens cell **24** to move along the optical axis, eliminating the need for the guide rods present in prior art. The segments **192** of the mid-lens cell **24** engage, through pins **194**, the internal cam groove **175** of the deployment barrel **140**. The pins **194** function as cam followers; they protrude through the guiding slots **195** of the front barrel **150** and engage the cam groove **175** of the movable deployment barrel **140**. More specifically, the mid-lens cell **24** is mounted inside the front barrel **150** so that the pads **193** engage the internal straight linear grooves **186** of the front barrel **150**. Thus, the mid-lens cell can slide within the front barrel **150** relative to the front and the rear lens cells **22**, **26**.

The rear lens cell **26** (FIG. **11**) is also positioned inside the front barrel **150**. This rear lens cell **26** includes at least one lens seat **196** (shown in FIGS. **2A–2C**) for the rear lens group **16**, and a plurality of radially symmetric pads **197** that are positioned between the segments **192** of the mid-lens sell **24** (see FIGS. **3** and **9**). The rear lens cell **26** is fixedly attached to the front barrel **150**, after the installation of the mid-lens cell, for example by cementing the pads **197** to the front barrel **150**. The pads **197** align with cut-outs in cell **24** (FIG. **3**).

A cover assembly **198** (FIG. **3**) protects the lens elements and the rest of the zoom assembly **100** from scratches and dust. The cover assembly **198** is positioned in front of the front barrel **150** and is secured to the front barrel **150**. The cover assembly **198** includes a plurality of cover gate leafs **198**A and a cover actuator **198**B. To prevent contamination of the lens elements and the shutter mechanism, the cover gate leafs **198**A are closed by the cover actuator **198**B when the lens barrels **130**, **140**, **150** in a the park position.

Lens Group Motion and Cam Profile

In order to move lens groups **12**, **14**, **16** from a wide angle position W to a telephoto position T, the zoom motor **169** is energized by current source. The zoom motor **169** brings the deployment barrel **140** into rotation through the gear train **168** which decreases rotational speed of the rotating shaft **169**A by approximately 1000 times (at the same time the torque is increased 1000 times). More specifically, the spur gear **167** engages the deployment barrel's gear section **170** and rotates the deployment barrel **140**.

The outer helical threads **173** of the deployment barrel **140** are engaged with the internal helical threads **164** of the frame barrel **120**. When the deployment barrel rotates, it also moves linearly with respect to the frame barrel. As stated above, the deployment barrel **140** has the internal helical threads **174** which engage the external segmented helical thread **184** of the front barrel **150**. When the deployment barrel **140** rotates, it moves the front barrel **150** along the optical axis **17**. That is, the front barrel **150** is being moved outwards relative to the deployment barrel **140**. The deployment barrel **140** and the front barrel **150**, together, deliver the outer lens groups **12**, **16** and the middle lens group **14** from the wide angle position to the telephoto position.

As discussed above, the internal cam grooves **175** of the rotating deployment barrel **140** engage the pins **194** of the mid-lens cell **24**. (See FIG. **10**.) In order to prevent the rotation of the mid-cell **24** within the front barrel **150**, the mid-lens cell **24** has three segments **192** with pads **193** that are caught in the internal straight linear grooves **186** of the front barrel. This is shown schematically in FIG. **9**. This configuration enables the mid-cell **24** to travel linearly with the front barrel **150** for the focus adjustment at the discreet zoom positions at the pace that is dictated by the cam profile of groove **175** in accordance with lens formula. That is, the cam profile of this embodiment allows the zoom lens to perform the zooming function and to focus for different object distances in each of the zoom positions. More specifically, the front and the rear lens cells **22**, **26** move in unison and linearly along the optical axis **17** and the mid-lens cell **24** is moved along the optical axis, according to the cam profile, relative to the front and rear lens cells **22**, **26**. This cam profile is stepped and is illustrated in FIG. **12**. The vertical axis (Y-axis) of this figure depicts the distance, in millimeters from the edge **199** of the rim of the deployment barrel **140**. The horizontal axis depicts the rotation angle of the deployment barrel **140**, the origin corresponding to the park position.

The cam profile of groove **175** (depicted in FIG. **12**) also illustrates various positions of the pin **194** within the cam groove **175** which are represented by points **1** through **19**. More specifically, point **1** corresponds to a parked position. FIG. **12** further illustrates the relationship between the position of the center of the cam groove along the Y-axis and the rotation angle of the deployment barrel. The Y-axis is parallel to the optical axis **17**. The slope angles θ defining different sections of the cam groove **175** are measured with respect to the optical axis **17**.

FIG. **13** is similar to FIG. **12** but, also depicts which portions of the cam groove **175** are used for focusing and which portions are used for transitioning from one zoom position to another zoom position. The positions of the pin **194** within the cam groove **175** of FIG. **13** are again represented by points **0** through **19**. The cam profile shown in FIGS. **12** and **13** is divided into two terminal zones α, β (defined by the lines A and B at the wide end and by the lines C, D at the telephoto end), several primary zoom segments corresponding to zoom positions one through five (Pos. #**1** being the Wide angle position, Pos. #**5** being the Telephoto position) and several transitional segments (represented by dark segments in FIG. **13**). These segments, their location in the cam profile and the motion of the lens cells is described in detail below.

From the parked position to the first zoom position (i.e., Pos. #**1**, the wide angle position) all lens cells move together toward the object side and away from the camera body. This corresponds to the movement of the pin **194** from point **0** to point **1** of the cam groove. More specifically, the lens cells **22**, **24** and **26** move in unison (i.e., at the same speed and direction) and the positions of the lens groups **12**, **14**, and **16** are fixed with respect to one another.

In the wide angle position (pin **194** moves from point **1** to point **2**, FIGS. **12** and **13**) the three lens cells **22**, **24**, **26** continue to move in unison to provide the focus adjustment for the objects located at different distances from the zoom lens (far objects to near objects). This is called a unitary focusing action. As the pin **194** continues to move from the point **2** to the point **4** the lens cells **22**, **24** and **26** continue to move at the same speed and direction. The movement of the lens cells corresponding to the area between points **2** and **4** on FIGS. **12** and **13** compensates for the factory assembly errors, back lash, thermal perturbations and parts tolerances buildup.

The transitional segments facilitate transitions from one zoom position to another zoom position. The first transitional segment of the cam profile is bound by the points **4** and **5**. Point **4** corresponds to the beginning of transition between the wide angle position (Pos. #**1**) and the second zoom position (Pos. #**2**). In order to arrive from the first zoom position to the second zoom position (point **5**), the

front and rear lens cells **22**, **26** continue to move towards the object side while the mid-lens cell **24** reverses its direction of travel (FIG. **13**). This corresponds to the change of slope in the cam profile at point **4** and to the segment bound by points **4** to **5** (See FIGS. **12** and **13**). (The slope of the cam profile is measured relative to the optical axis **17**. Thus, during this transition between two zoom positions, the mid-lens cell **24** moves closer to the rear lens cell **26**. It is noted that the first transitional segment has the slope of an opposite sign then the primary zoom segment bounded by the points **0** to **4**.

The next second primary zoom segment corresponds to the second zoom position (Pos. #**2**). It is bounded by points **5** and **8**. At the second zoom position (Pos. #**2**) the three lens cells **22**, **24**, **26** move in unison toward the object side (away from the camera body). The area of the graph between points **5** and **6** is used to compensate for the factory assembly errors, back lash, thermal perturbations and parts tolerances buildup. The area of the graph between points **6** and **7** is used to provide the focus adjustment when taking pictures in the second zoom position (Pos. #**2**). That is, as the pin **194** moves from point **6** to point **7**, (FIGS. **12** and **13**) the three lens cells **22**, **24**, **26** move in unison to provide the focus adjustment for the objects located different distances from the zoom lens. As the pin **194** continues to move from point **7** to point **8**, the three lens cells continue to move forward at the same speed and direction. The area of between points **7** and **8** is used to compensate for the factory assembly errors, back lash, thermal perturbations and parts tolerances buildup.

In order to arrive from the second zoom position (Pos. #**2**) to the third zoom position (Pos. #**3**) the front and rear lens cells **22**, **26** continue to move towards the object side while the mid-lens cell again reverses its direction of travel (FIG. **12**). This corresponds to the change of slope in the cam profile at point **8** (See FIG. **12**) and to the transitional segment bound by points **8** to **9**. That is, the area between points **8** and **9** (See FIGS. **12** and **13**) corresponds to the transition between the second zoom position (Pos. #**2**) and the third zoom position (Pos. #**3**). During this transition, the mid-lens cell **24** moves closer to the rear lens cell **26**. It is noted that this transitional segment has the slope of an opposite sign then the adjacent, second primary zoom segment.

At the third zoom position (Pos. #**3**), corresponding to the third primary zoom segment bound by the points **9** and **13**) the three lens cells **22**, **24**, **26** continue to move in unison toward the object. The areas of between points **9** and **10**, **11** and **12** are used to compensate for the factory assembly errors, back lash, thermal perturbations and parts tolerances buildup. As in the previous zoom positions, when the pin **194** moves from point **10** to point **11**, (FIGS. **12** and **13**) the three lens cells **22**, **24**, **26** move in unison to provide a focus adjustment for the objects located different distances from the zoom lens. It is noted that the third primary zoom segment has the slope of the opposite sign then the proceeding transitional segment.

So far, in the first three primary zoom positions and in between these positions, the movements of the lens cells follow a similar pattern. However, the transition between the third zoom position (Pos. #**3**) and the fourth zoom position (Pos. #**4**) is different from the previously described transitions. In order to arrive to the forth zoom position the three lens cells **22**, **24**, **26** continue to move in unison toward an object. Thus, the slope of the cam profile does not change (see the cam segment between points **12** and **13**, FIG. **12**) and the sign of the slope stays the same.

In the fourth zoom position (Pos. #**4**) the focus adjustment is accomplished by moving the middle lens cell **24** toward the rear lens cell **26**. This corresponds to the change of slope in the cam profile at point **13**, and in reversal of the sign of the slope. (See the primary zoom segment bound by the points **13** to **18**, FIG. **12**). Thus, the focus adjustment is no longer achieved by moving the three lens cells at the same speed and direction. This is called a non-unitary focusing action.

In order to arrive at the fifth zoom position (Pos. #**5**, telephoto position) the three lens cells **22**, **24**, **26** move in unison toward the object side. The motion of the second lens cell **24** corresponds the segment of the graph that is bound by the points **18** to **19** (See FIG. **13**). In the fifth zoom position the focus adjustment is accomplished by moving the middle lens cell toward the rear lens cell. This corresponds to the change of slope in the cam profile at point **19** (See FIG. **9**) and to a portion of the segment bound by points **19** to **24** (See FIG. **13**).

Thus, transitions between the first and second zoom, and the second and third zoom positions was accomplished by moving the middle lens cell **24** closer to the rear lens cell **26**. This is shown by the change in slope from that of the preceding primary zoom sections of the transitional sections defined by the points **4**, **5** and **8**, **9** (See FIG. **12**). The transition between the third and fourths zoom positions, as well as between the fourth and fifth zoom position was accomplished by moving all three lens cells **22**, **24**, **26** towards the object side at the same speed and direction (See cam sections bound by points **12** and **13**; **18** and **19**.)

The invention has been described in detail with particular reference to certain preferred embodiments thereof, but it will be understood that variations and modifications can be effected within the spirit and scope of the invention.

PARTS LIST

10 zoom lens
12 front lens group
14 middle lens group
16 rear lens group
17 optical axis
22 front lens cell
24 mid-lens cell
26 rear lens cell
100 zoom assembly
120 frame barrel
130 camera body
140 deployment barrel
150 front lens barrel
160 sleeve of the frame barrel
162 guide slot in the sleeve **160**
163 key
163A ring of key **163**
163B protrusion of key **163**
163C arm of key **163**
164 helical threads
166 support sleeve
167 long spur gear
168 gear train
169 motor
169A motor shaft
170 external gear section of deployment barrel **140**
172 deployment barrel sleeve
173 outer threads of deployment barrel **140**
174 internal threads of the deployment barrel **140**
175 cam grooves of the deployment barrel **140**
182 lens seats of first lens cell
184 outer threads in the front barrel **150**
186 linear grooves of the front barrel
191 lens seats of mid-lens cell **24**

192 segments of mid-lens cell **24**
193 pads
194 pins
195 guiding slots of the deployment barrel **140**
196 lens seats for the rear lens group **16**
197 pads of the rear lens cell **16**
198 cover assembly
198A cover gate leafs
198B cover actuator
199 edge of the deployment barrel **140**

What is claimed is:

1. A zoom assembly comprising:

a zoom lens defining an optical axis, said zoom lens being capable of operating in a plurality of different zoom positions and of focus adjustment for different object distances in each of said zoom positions, said zoom positions being (i) two extreme zoom positions comprising a wide angle position and a telephoto position, and (ii) a plurality of intermediate zoom positions; said zoom lens including at least a first movable lens group and a second movable lens group, said first and said second lens group being separated from one another by a variable distance; wherein said first and said second movable lens groups move

(i) together, at the same speed and direction in order to focus at one of said extreme zoom positions and at an adjacent one of said intermediate zoom positions; and

(ii) differentially in order to focus at another one of said extreme zoom positions.

2. A zoom assembly according to claim **1**, wherein said first and said second movable lens groups move

(i) together, at the same speed and direction for focusing at one of said extreme zoom positions and at the three adjacent zoom positions; and

(ii) differentially in order to focus at another of said intermediate zoom positions.

3. A zoom assembly comprising:

a zoom lens defining an optical axis, said zoom lens being capable of operating in a plurality of different zoom positions and of focus adjustment for different object distances in each of said zoom positions, said zoom positions being two extreme zoom positions comprising a wide position and a telephoto position, and a plurality of intermediate zoom positions, said zoom lens including at least a first movable lens group and a second movable lens group, said first and said second lens group being separated from one another by a variable distance, wherein said first and second lens groups move

(a) together, at the same speed and direction to focus at the wide angle position;

(b) differentially, to transition from the wide angle position to a first intermediate zoom position;

(c) together, at the same speed and direction to focus at the first intermediate zoom position;

(d) differentially, to transition from said first intermediate zoom position to a second intermediate zoom position;

(e) together, to focus at said second intermediate zoom position;

(f) differentially, to focus at a third intermediate zoom position;

(g) differentially, to focus at a zoom position adjacent to said third intermediate zoom position.

4. A zoom assembly according to claim **3**, wherein said zoom position adjacent to said third, intermediate zoom position is said telephoto position.

5. A zoom assembly according to claim **3**, wherein said zoom lens comprises a third lens group, said third and said first lens groups being separated by a constant distance during zooming and during focusing.

6. A zoom assembly according to claim **5**, wherein said first lens group has positive optical power, said second lens group has positive optical power and said third lens group has negative optical power.

7. A zoom assembly according to claim **6**, having at least one aspheric surface.

8. A zoom assembly according to claim **6**, wherein at least two of said first, second and third lens groups have an aspheric surface.

9. A zoom assembly according to claim **6**, wherein said first lens group includes at least one positive lens element and at least one negative lens element, and said third lens group includes a negative lens element with

(i) a concave surface facing said second lens group; and

(ii) another surface, said another surface having weaker radius of curvature than said concave surface.

10. A zoom assembly according to claim **6**, wherein

(i) said first lens group includes a biconvex lens element and a biconcave lens element;

(ii) said second lens group includes a weak meniscus lens element and a biconvex lens element; and

(iii) said third lens group includes a negative lens element with a stronger curvature facing said second lens group.

11. A zoom assembly according to claim **10**, wherein said second lens group has at least one aspheric surface, and said third lens group has at least one aspheric surface.

12. A zoom assembly according to claim **6**, wherein said first lens group consists of a positive power lens element and a negative power lens element; said second lens group consists of two lens elements, at least one of which is biconvex; and said third lens group consists of a negative lens element with a stronger curvature facing said second lens group.

13. A zoom assembly according to claim **12**, wherein said zoom lens has at least one aspherical surface.

14. A zoom assembly according to claim **1**, wherein said zoom lens consists of said first lens group, said second lens group and a third lens group.

15. A zoom assembly according to claim **14**, wherein said first and said third lens groups are separated by a constant distance during zooming and during focusing.

16. A zoom assembly according to claim **15**, wherein said first lens group has positive optical power, said second lens group has positive optical power and said third lens group has negative optical power.

17. A zoom assembly according to claim **16**, wherein said first lens group consists of a positive power lens element and a negative power lens element; said second lens group consists of two lens elements, at least one of which is biconvex; and said third lens group consists of a negative lens element with a stronger curvature facing said second lens group.

18. A zoom assembly according to claim **2**, wherein said zoom lens consists of said first lens group, said second lens group and a third lens group.

19. A zoom assembly according to claim **18**, wherein said first and said third lens groups are separated by a constant distance during zooming and during focusing.

20. A zoom assembly according to claim **19**, wherein said first lens group has positive optical power, said second lens group has positive optical power and said third lens group has negative optical power.

* * * * *

UNITED STATES PATENT AND TRADEMARK OFFICE

CERTIFICATE OF CORRECTION

PATENT NO. : 6,151,171
APPLICATION NO. : 09/281898
DATED : November 21, 2000
INVENTOR(S) : Michael Kenin et al.

It is certified that error appears in the above-identified patent and that said Letters Patent is hereby corrected as shown below:

ON THE TITLE PAGE, ITEM (54) AND IN THE SPECIFICATION, COLUMN 1, LINE 2,

In the title, delete "GROUP" and insert --GROUPS--

Signed and Sealed this
Eighth Day of April, 2014

Michelle K. Lee

Michelle K. Lee
Deputy Director of the United States Patent and Trademark Office