US 20040228005A1

(19) United States

(12) Patent Application Publication

(10) Pub. No.: US 2004/0228005 A1

(43) Pub. Date: Nov. 18, 2004

Dowski, JR.

(54) MECHANICALLY-ADJUSTABLE OPTICAL PHASE FILTERS FOR MODIFYING DEPTH OF FIELD, ABERRATION-TOLERANCE, ANTI-ALIASING IN OPTICAL SYSTEMS

(76) Inventor: **Edward Raymond Dowski JR.**, Lafayette, CO (US)

Correspondence Address:
LATHROP & GAGE LC
4845 PEARL EAST CIRCLE
SUITE 300
BOULDER, CO 80301 (US)

(21) Appl. No.: **10/810,446**

(22) Filed: **Mar. 25, 2004**

Related U.S. Application Data

(60) Provisional application No. 60/458,299, filed on Mar. 28, 2003.

Publication Classification

(51) **Int. Cl.**[7] **G02F 1/01**; G01B 9/02; G02B 13/08

(52) **U.S. Cl.** **359/671**; 359/279

(57) **ABSTRACT**

An optical system with mechanical adjustment provides for the rotation and/or translation of one or more optical phase filters to variably select an extended depth of field, aberration-tolerance, and/or anti-aliasing properties of an optical imaging system. By adjusting the amount of phase induced on the wavefront, a user may select image quality selectively. The system may further automatically counter change of focus and/or aperture to maintain substantially constant image properties. Typically, two phase filters are used and moved concurrently to achieve desired image properties.

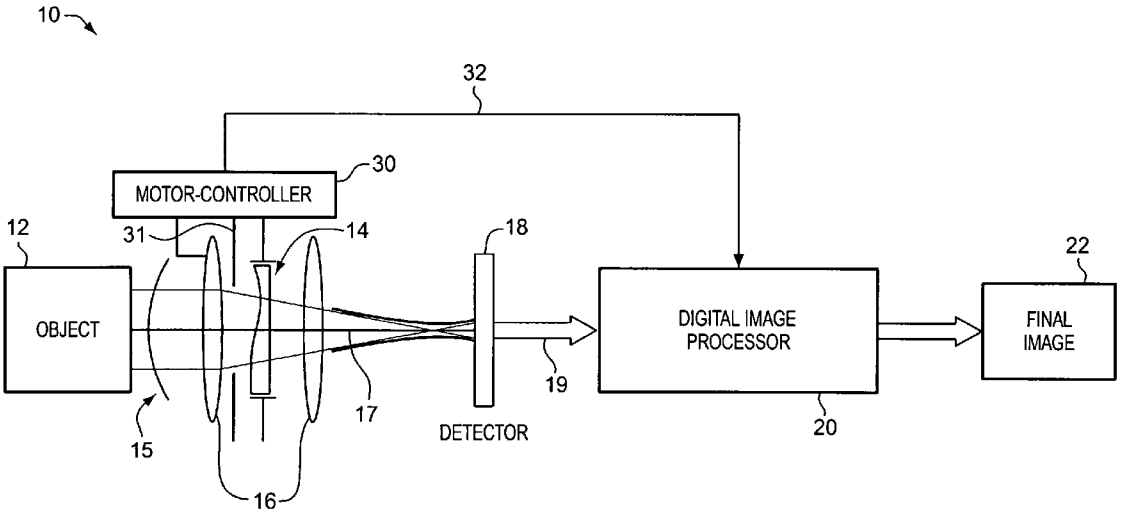

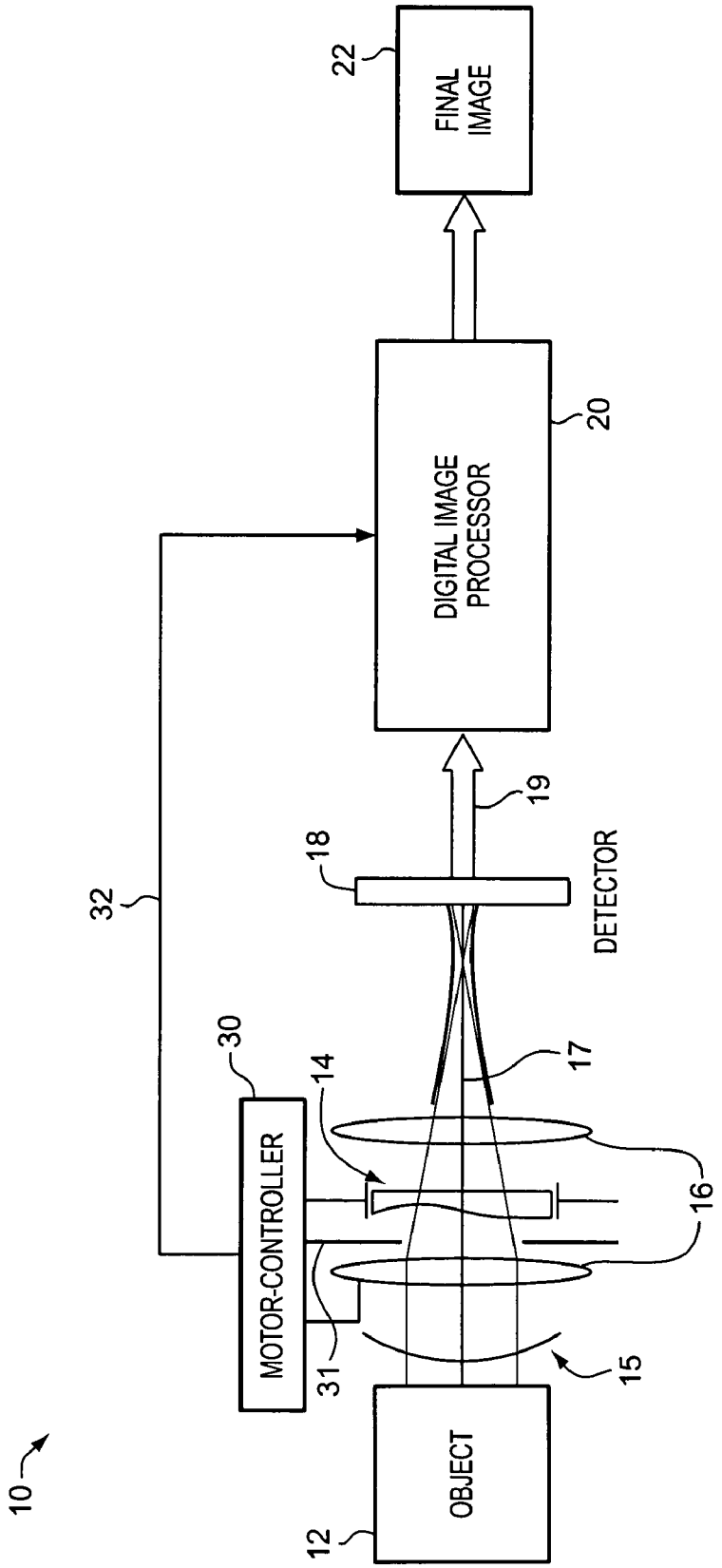
FINAL IMAGE
22
DIGITAL IMAGE PROCESSOR
20
19
18
DETECTOR
32
30
MOTOR-CONTROLLER
14
17
16
31
15
OBJECT
12
10

FIG. 1

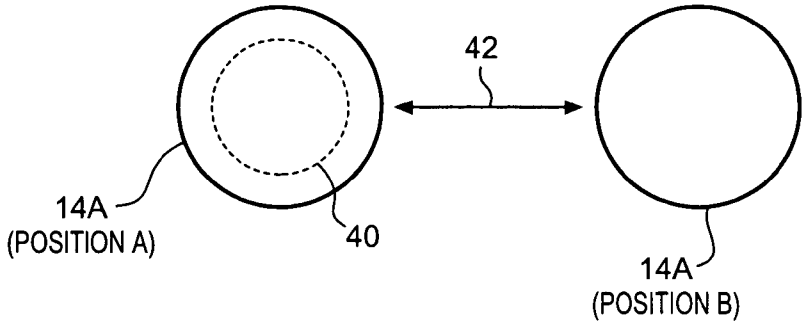

FIG. 2A

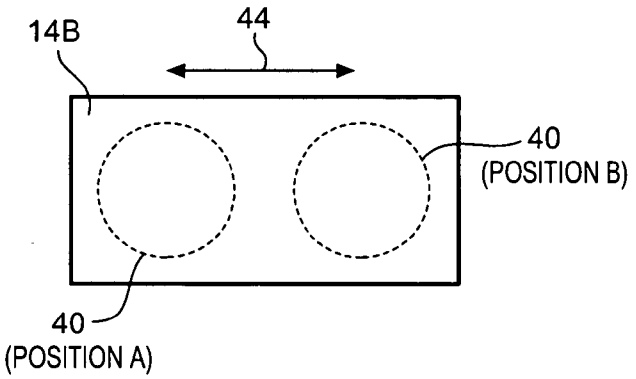

FIG. 2B

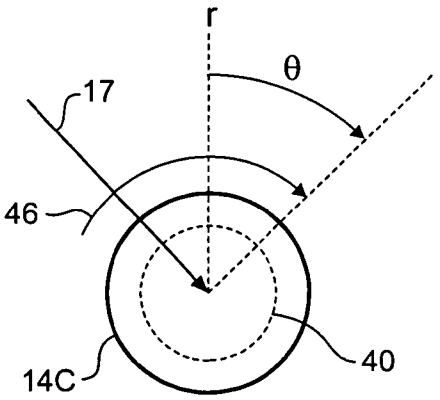

FIG. 2C

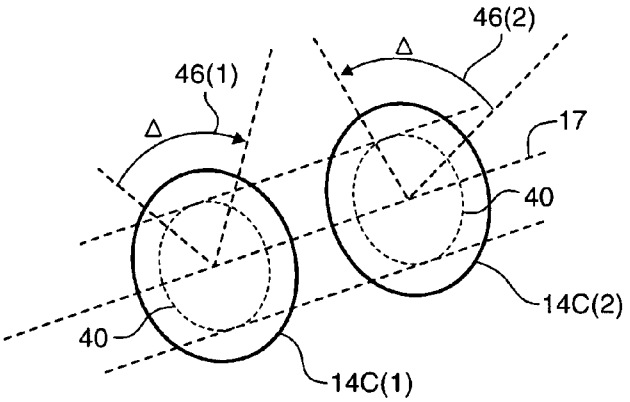

FIG. 2D

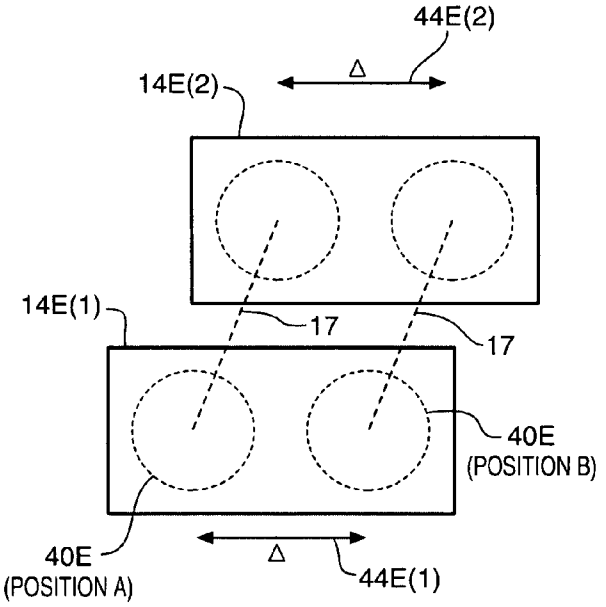

FIG. 2E

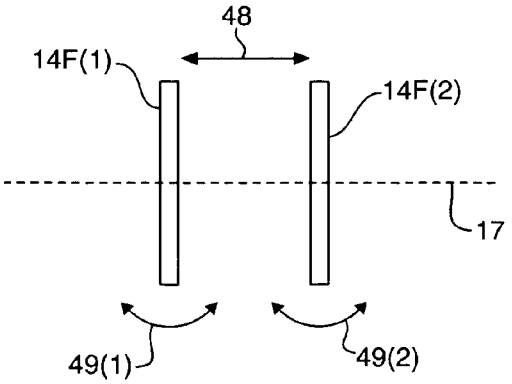

FIG. 2F

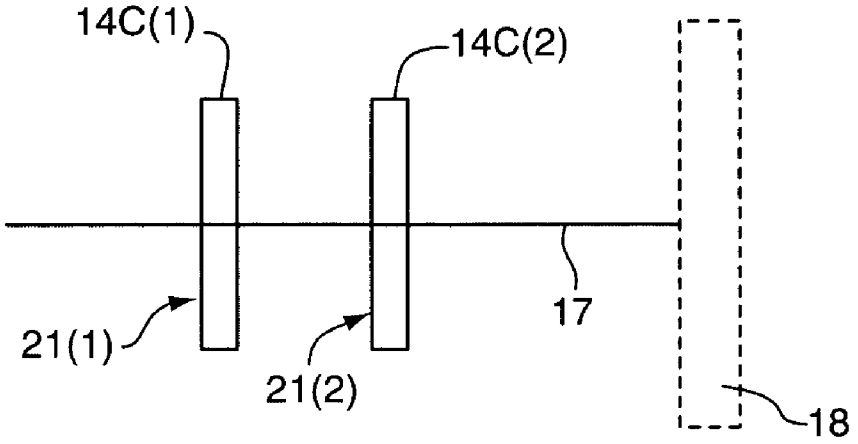

FIG. 2G

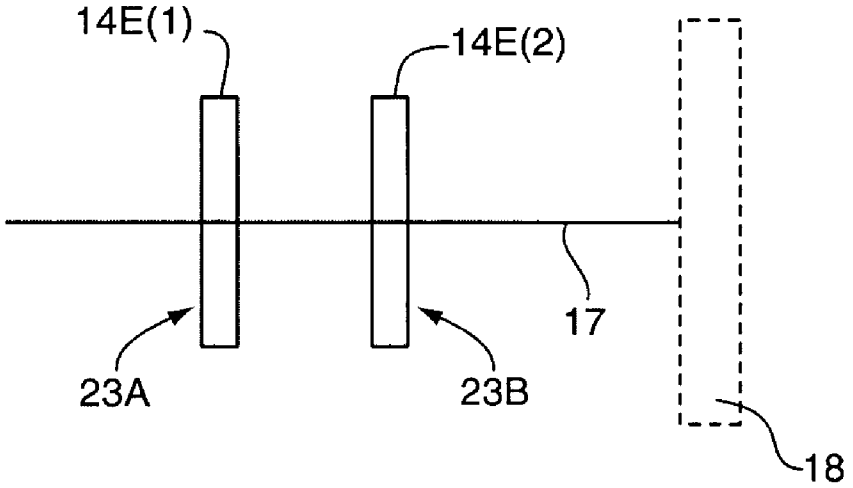

FIG. 2H

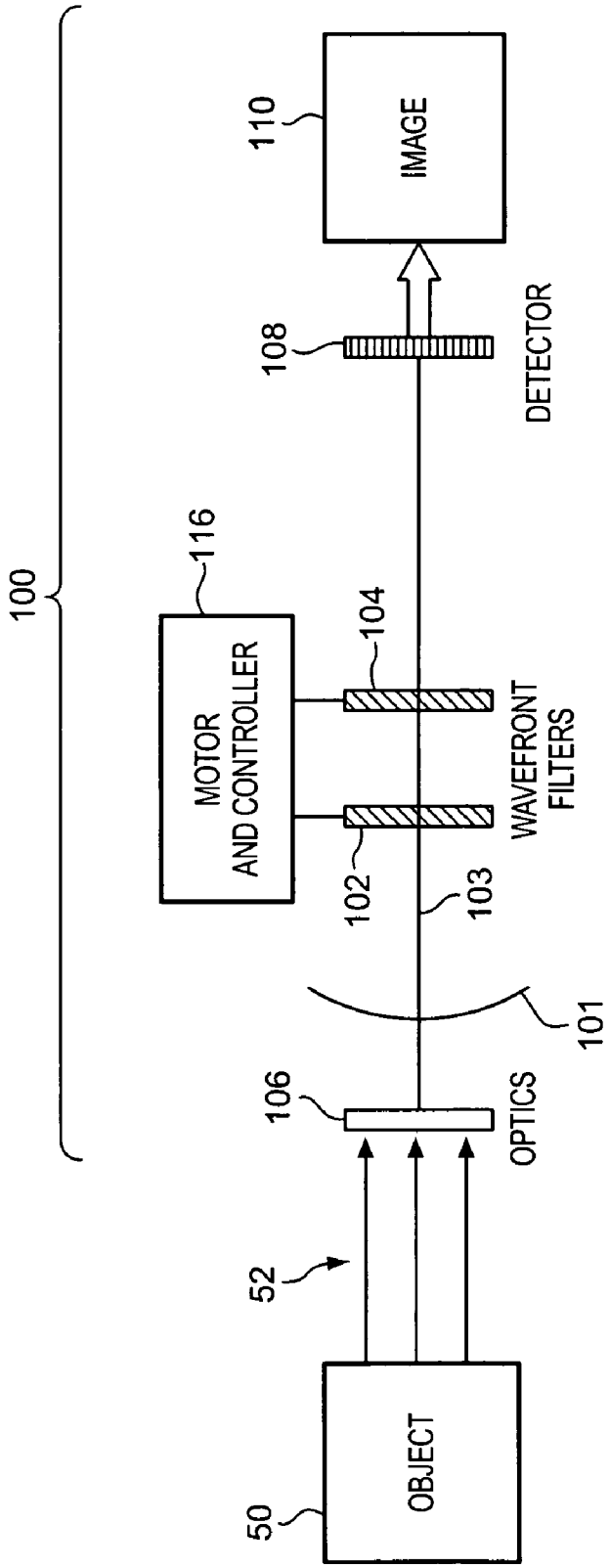
100
116
MOTOR
AND CONTROLLER
110
IMAGE
108
DETECTOR
104
WAVEFRONT
FILTERS
102
103
101
106
OPTICS
52
50
OBJECT

FIG. 3

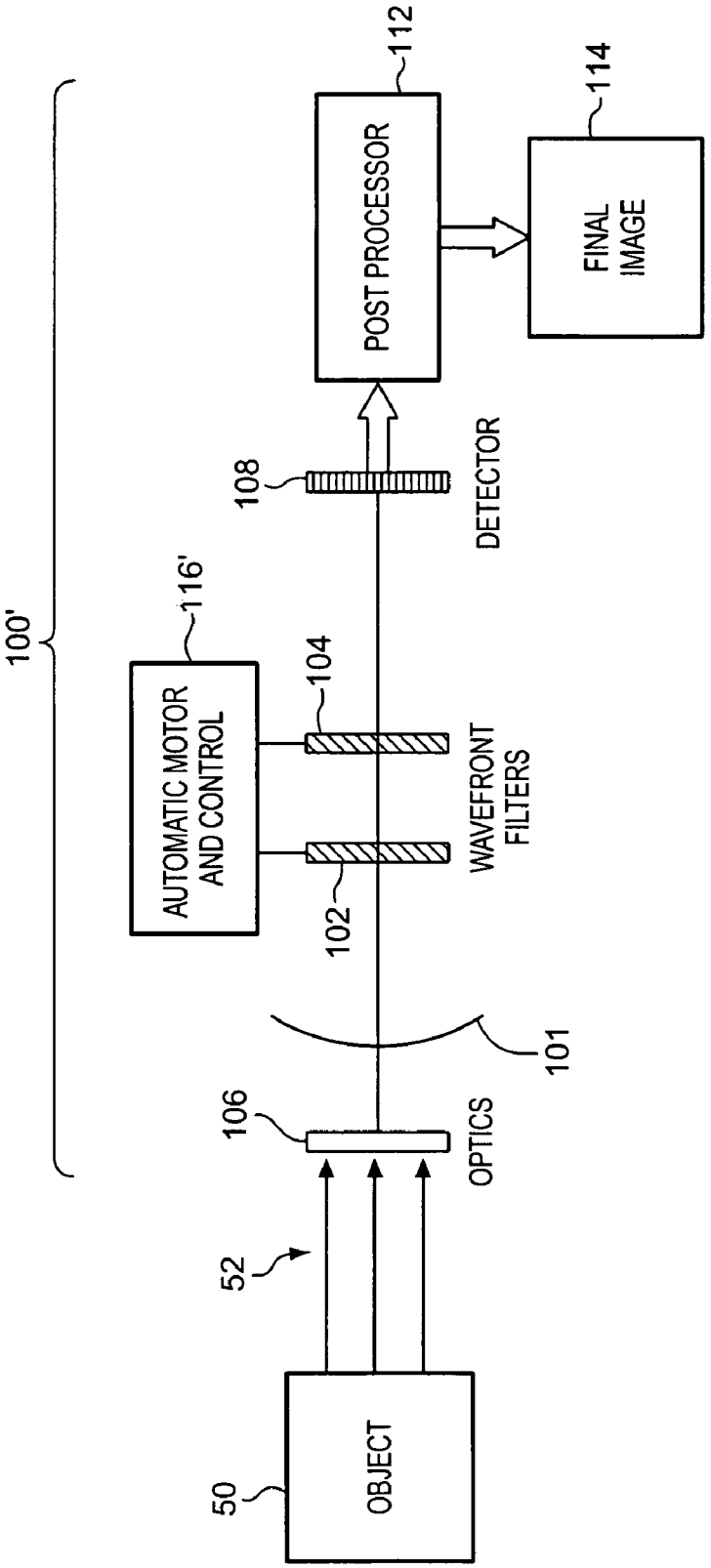
100'
50
OBJECT
52
106
OPTICS
101
102
WAVEFRONT FILTERS
104
AUTOMATIC MOTOR AND CONTROL
116'
108
DETECTOR
POST PROCESSOR
112
FINAL IMAGE
114

FIG. 4

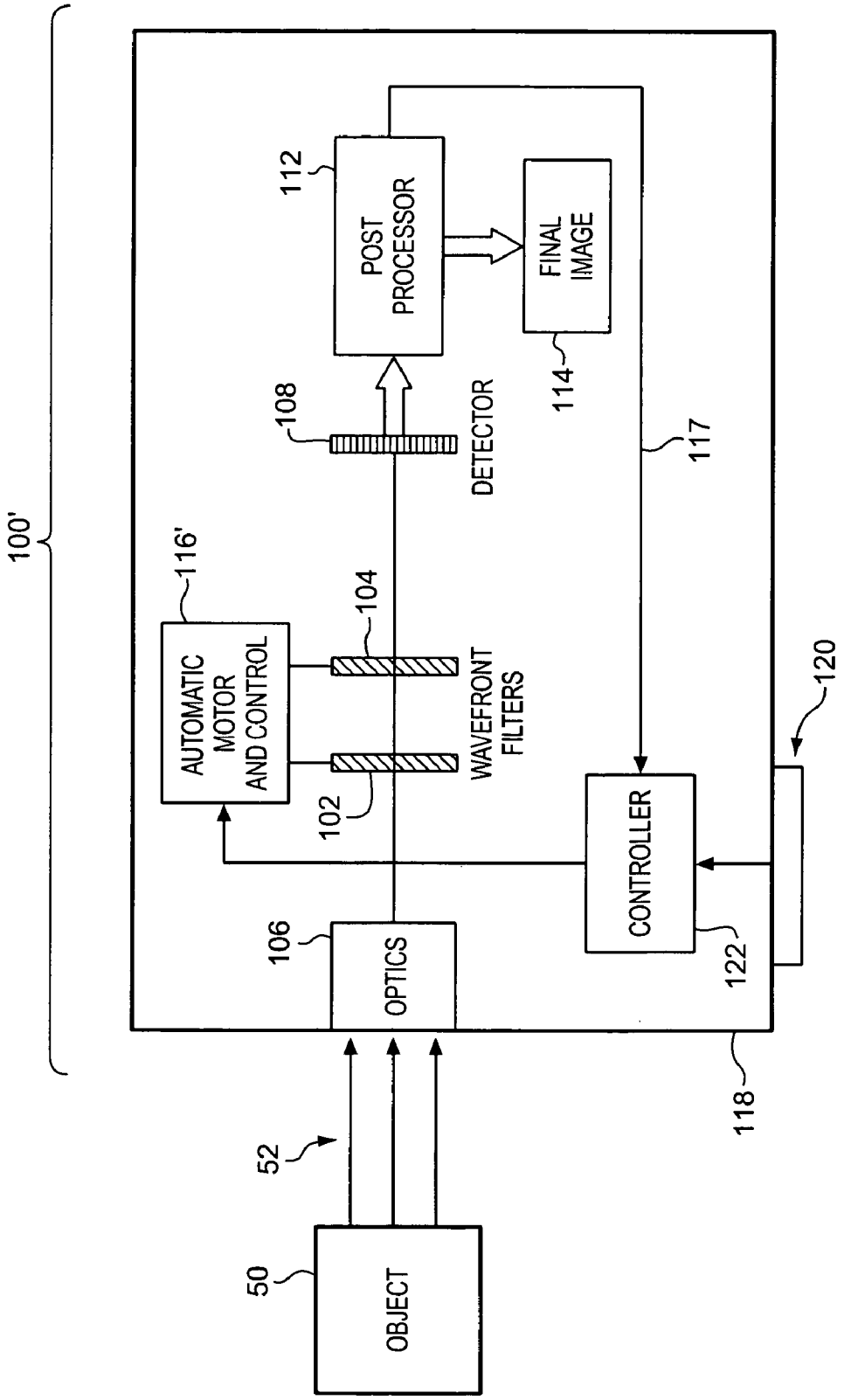
100'
116'
AUTOMATIC MOTOR AND CONTROL
104
WAVEFRONT FILTERS
102
108
DETECTOR
112
POST PROCESSOR
FINAL IMAGE
114
117
106
OPTICS
CONTROLLER
122
120
118
52
50
OBJECT

FIG. 5

FIG. 6

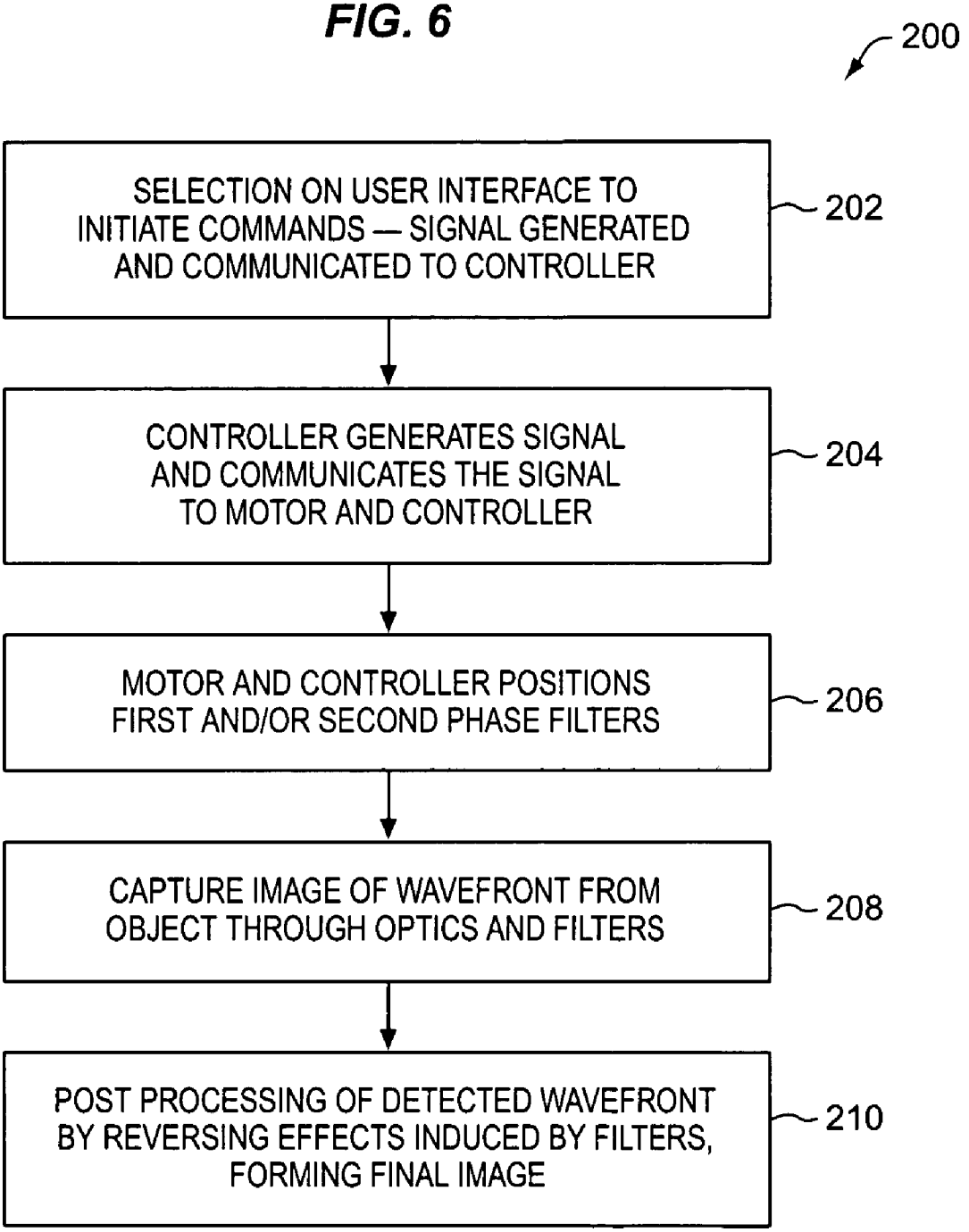
200
SELECTION ON USER INTERFACE TO INITIATE COMMANDS — SIGNAL GENERATED AND COMMUNICATED TO CONTROLLER
202
CONTROLLER GENERATES SIGNAL AND COMMUNICATES THE SIGNAL TO MOTOR AND CONTROLLER
204
MOTOR AND CONTROLLER POSITIONS FIRST AND/OR SECOND PHASE FILTERS
206
CAPTURE IMAGE OF WAVEFRONT FROM OBJECT THROUGH OPTICS AND FILTERS
208
POST PROCESSING OF DETECTED WAVEFRONT BY REVERSING EFFECTS INDUCED BY FILTERS, FORMING FINAL IMAGE
210

FIG. 7

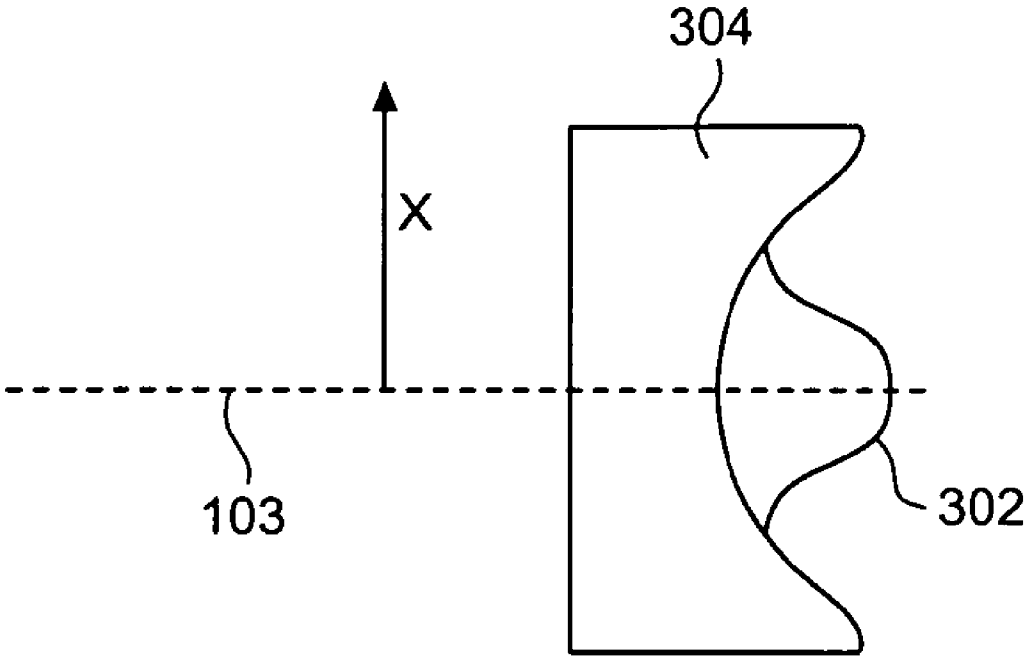

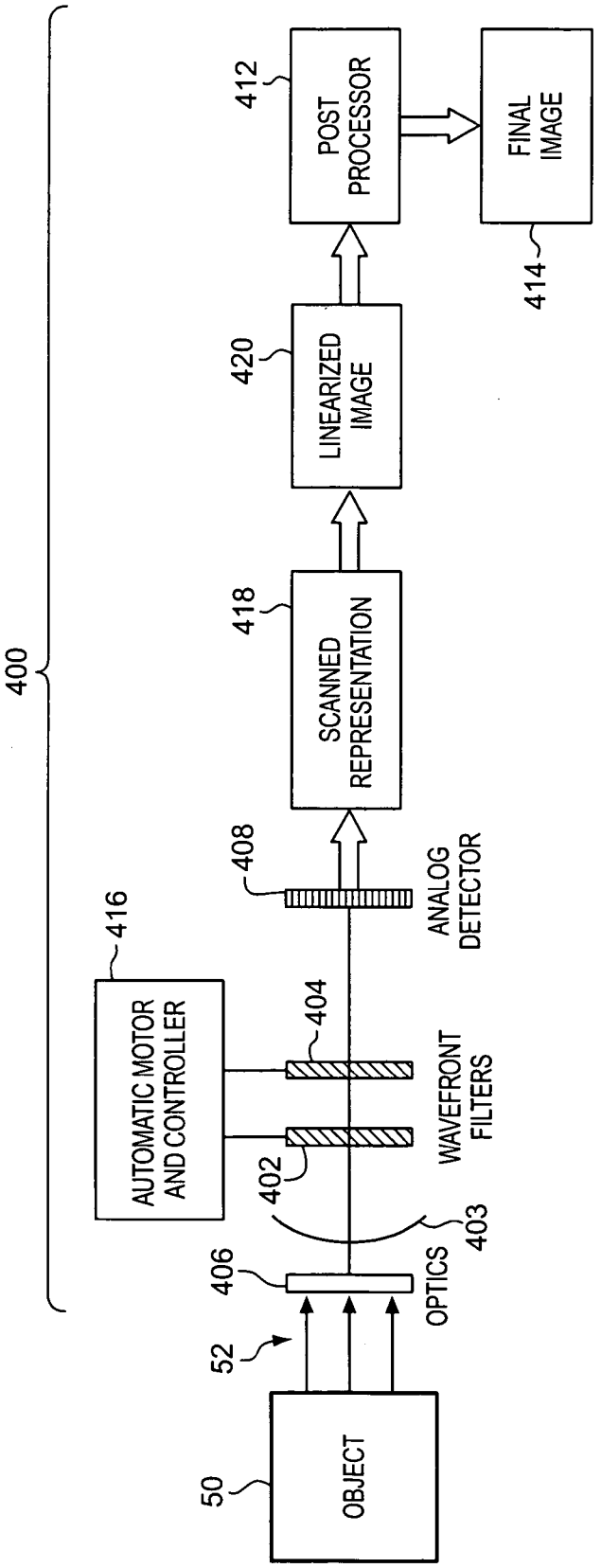
400
416
AUTOMATIC MOTOR AND CONTROLLER
50
OBJECT
52
406
OPTICS
402
403
404
WAVEFRONT FILTERS
408
ANALOG DETECTOR
418
SCANNED REPRESENTATION
420
LINEARIZED IMAGE
412
POST PROCESSOR
414
FINAL IMAGE

FIG. 8

MECHANICALLY-ADJUSTABLE OPTICAL PHASE FILTERS FOR MODIFYING DEPTH OF FIELD, ABERRATION-TOLERANCE, ANTI-ALIASING IN OPTICAL SYSTEMS

CROSS-REFERENCE TO RELATED APPLICATIONS

[0001] This application claims priority to U.S. Provisional Application Serial. No. 60/458,299, filed Mar. 28, 2003, and incorporated herein by reference.

BACKGROUND

[0002] Prior art optical design within optical imaging systems has primarily focused on optical elements and the detector used to capture an image. Such optical elements typically include lenses and mirrors that focus and magnify optical radiation. The detector is, for example, an analog detector (e.g. film) or a digital detector (e.g., CCD or CMOS array) that detects the optical radiation to render a final image.

[0003] Mechanical adjustment of optical elements is also known in the prior art to control and obtain best focus within optical imaging systems. The most common method of mechanical adjustment is to vary the distance of the image plane by moving a lens. Other mechanical adjustment methods involve interchanging lens elements with different focusing power.

[0004] One form of optical focusing through mechanical means involves transverse movement of two optical elements, as described in U.S. Pat. No. 3,305,294. In the '294 patent, a pair of aspherical optical elements moves transversely in equal but opposite displacements. The form of the aspherical optical elements is defined by polynomials that are strongly dependent on the cubic terms of a power series of two variables.

[0005] An improvement to the focusing method in the '294 patent is described in U.S. Pat. No. 3,583,790. The '790 patent allows lateral movement of only one aspheric optical element as opposed to two aspheric optical elements, as required by the '294 patent.

[0006] Another method of modifying focus is described in U.S. Pat. No. 4,650,292. In the method of the '292 patent, two or more aspherical optical elements are rotated about axes decentered with respect to the optical axis, to modify focus.

[0007] The aforementioned prior art thus facilitates obtaining best focus within the imaging system by using mechanical means. If one of the optical elements of the imaging system changes, e.g., due to thermal conditions, then the system may lose focus and, unacceptably, the image. Moreover, aside from changes in focal length and aperture, the depth of focus, depth of field and amount of anti-aliasing of the imaging system remain unchanged. Furthermore, if there is a change of focal length and/or aperture, there is no present way, for example, to maintain a fixed depth of focus, depth of field and/or anti-aliasing effects, if desired.

[0008] The aforementioned patents (U.S. Pat. Nos. 3,305,294; 3,583,790; 4,650,292) are incorporated herein by reference.

SUMMARY

[0009] In one aspect, mechanical adjustment of phase filters is provided to modify wavefront phase and extend depth of field (and/or depth of focus) within an optical imaging system. Such mechanical adjustment may modify the wavefront phase to control aberration-tolerance and/or anti-aliasing properties of the imaging system.

[0010] In one aspect, wavefront phase is modified by movement of phase filters. In one example, the phase filters are arranged along the optical axis of the imaging system. Each of the phase filters modifies the wavefront phase in a particular way, to encode the wavefront with a phase function. In one aspect, the filters have the same phase function but are rotated relative to one another to effect the desired wavefront phase modification.

[0011] Those skilled in the art will appreciate that mechanical adjustment of the phase filters may occur in several ways to effect the desired phase change in the wavefront, without departing from the scope thereof. For example, in one aspect a phase filter is moved transversely to the optical axis to modify wavefront change as a function of the transverse movement; such a phase filter has a phase function that accommodates the transverse movement to effect the desired wavefront phase modification. In another aspect, a phase filter is rotated through different parts of the filter to effect wavefront phase modification; such a filter is, for example, a large disc through which the wavefront passes, wherein rotation of the disc encodes a new phase function onto the wavefront.

[0012] In another aspect, an optical imaging system with mechanical adjustment is provided that is particularly suited for use in digital imaging systems, such as digital cameras. Specifically, the optical system with mechanical adjustment modifies wavefront phase within the imaging system to effect desired depth of field, aberration-tolerance, and/or anti-aliasing properties. As above, the imaging system employs and selectively moves one or more phase filters to modify wavefront phase. A detector (e.g., a digital CCD or CMOS array, or analog film) is used to detect electromagnetic radiation after the phase filters. This electromagnetic radiation may take the form of a blurred, intermediate image. Digital image processing of data from the detector removes certain effects induced by the phase filters to render a final, in-focus image with the desired properties (i.e., depth of focus, depth of field, aberration-tolerance, anti-aliasing properties).

[0013] In one aspect, the digital image processing may be effected through a digital signal processor which has position information of the phase filters. The position information corresponds to a selected phase modification of the wavefront that invokes the desired properties. The selected phase modification is effectively removed during digital signal processing to yield the desired imaging properties.

[0014] Accordingly, in one aspect, a user interface provides for selective user phase modification of the wavefront to effect the desired properties. The user interface connects with a motor responsive to user inputs to modify wavefront phase in the appropriate way.

[0015] In another aspect, an optical system with mechanical adjustment facilitates variably extending depth of field and increasing aberration tolerance. The system has a first

aspheric optical wavefront filter and a second aspheric optical wavefront filter. In one aspect, the first and second filters are parallel to one another and substantially share a common optical axis within the optical system. A means (e.g., a motor) is provided to rotate and/or translate the first optical filter with respect to the second optical filter. Both the first and second aspheric optical wavefront filters are constructed and arranged to alter the optical transfer function of the optical system in such a way that the altered optical transfer function is substantially insensitive to aberrations over a greater range of aberrations than was provided by the unaltered optical transfer function.

[**0016**] In one aspect, the amount of alteration of the optical transfer function is chosen by rotating (and/or translating) the first filter with respect to the second filter, and vice versa. Those skilled in the art appreciate that other movements of the phase filters may be applied to the wavefront within the optical system to obtain similar function and modification of the optical transfer function, to obtain the desired imaging properties.

[**0017**] In another aspect, the optical imaging system with mechanical adjustment is configured for imaging an object, and further has (a) a detector that detects an intermediate image of the object and (b) an image processor that processes data from the detector to reverse certain effects induced by the first and second optical wavefront filters, thereby generating a final image with the desired imaging properties.

[**0018**] In another aspect, the means to rotate and/or translate the first and second optical wavefront filters is a motor and control sub-system. The motor and control sub-system may be an automatic motor and control sub-system that provides mechanical adjustment of the wavefront phase to effect desired imaging properties (e.g., depth of focus, aberration-tolerance, anti-aliasing effects).

[**0019**] In one aspect, user input may be supplied to optical system via a user interface for controlling the means to rotate and/or translate the optical filters, for example to selectively control focusing of optical system and/or aberration reduction therein.

[**0020**] In still another aspect, the optical system with mechanical adjustment has a non-linear analog image detector, such as photographic film. The non-linear analog image detector, after detecting an image of the object, is scanned or sampled and values are linearized to remove the non-linear input/output characteristics of the detector. Then, the post processing element processes the linearized image by reversing alteration to the optical transfer function of the optical system accomplished by the first and second optical wavefront filters.

[**0021**] The method of another aspect facilitates variably affecting the wavefront phase of an optical system to selectively extend depth of field and/or increase aberration tolerance by a variable amount. The method includes the steps of aligning one or more aspheric optical wavefront filters in the optical system, and moving the optical wavefront filters to alter phase of the wavefront. In one aspect, the method further includes the step of capturing the wavefront with a detector and processing data from the detector to reverse certain effects induced by the wavefront filters, to generate a final image with the desired image properties (e.g., depth of focus, aberration-tolerance, anti-aliasing). For example, in one aspect, the optical wavefront filters modify an optical transfer function of the optical system such that the altered optical transfer function is substantially insensitive to aberrations over a greater range of aberrations than was provided by the unaltered optical transfer function.

[**0022**] In still another aspect, the motor and controller changes the aperture of the optical imaging system (e.g., by adjusting a motorized aperture within the system). In and of itself, the aperture change can affect the imaging properties (e.g., depth of focus, depth of field, aliasing properties, aberration tolerance) of the optical system—which may not be desired. Accordingly, the motor and controller may additionally move the optical filter(s) so as to modify phase of the wavefront, to readjust the imaging properties so that they remain unchanged even with the change of aperture size. In this way, for example, one can maintain a depth of field in object space irrespective of a change of aperture.

[**0023**] In another aspect, the motor and controller changes the focal length of the optical imaging system (e.g., by moving a lens of the system). In and of itself, the focal length change can affect the imaging properties (e.g., depth of focus, depth of field, aliasing properties, aberration tolerance) of the optical system—which may not be desired. Accordingly, the motor and controller may additionally move the optical filter(s) so as to modify phase of the wavefront, to readjust the imaging properties so that they remain unchanged even with the change of focal length. In this way, for example, one can maintain a depth of field in object space irrespective of a change of focal length.

BRIEF DESCRIPTION OF THE DRAWINGS

[**0024**] **FIG. 1** shows one optical imaging system with mechanical adjustment of a phase filter;

[**0025**] **FIGS. 2A, 2B**, 2C, 2D, 2E, 2F, 2G, 2H illustrate phase forms, surface configurations, and/or mechanical motions for exemplary phase filters;

[**0026**] **FIG. 3** shows one optical imaging system with mechanical adjustment of optical phase filters;

[**0027**] **FIG. 4** shows the optical imaging system of **FIG. 3** with a post processor;

[**0028**] **FIG. 5** shows the optical imaging system of **FIG. 3** with a user interface and housing;

[**0029**] **FIG. 6** shows one control process exemplifying operation of the optical system of **FIG. 5**;

[**0030**] **FIG. 7** shows one exemplary phase mask having variations in thickness; and

[**0031**] **FIG. 8** shows one optical imaging system with mechanical adjustment of phase filters utilizing linearization for images detected by a non-linear analog detector.

DETAILED DESCRIPTION OF THE INVENTION

[**0032**] **FIG. 1** shows one optical system **10** that selectively obtains desired imaging properties (e.g., depth of field, aberration tolerance, anti-aliasing) through wavefront coding and mechanical adjustment. Wavefront coding occurs through operation of optical phase filter **14**, which is for example a phase mask that employs aspheric surfaces to

modify phase of a wavefront **15** between object **12** and detector **18**. Optics **16** (e.g., lenses and/or mirrors) operate to focus wavefront **15** to detector **18**, as shown.

[**0033**] Detector **18** digitally captures the focused electromagnetic radiation of wavefront **15**. A digital image processor **20** post-processes data **19** from detector **18** to "undo" certain effects induced by optical phase filter **14**, to obtain the desired imaging properties (e.g., to increase in the depth of field of imaging system **10**, to decrease in wavelength sensitivity, to change aliasing effects, and/or to change tolerance of optics **16** to misfocus-related aberrations). To "undo" the certain effects, digital image processor **20** removes the spatial blur generated by aspheric phase filter **14**; at the same time, optics **16** and phase filter **14** operate to ensure that the spatial effects are substantially constant over the range corresponding to the desired imaging properties. Image processor **20** effectively performs a reverse convolution with the spatial blur generated by phase filter **14**, utilizing other system parameters as needed and desired to change or enhance the imaging properties. System **10** thus produces a final image **22** with these desired image properties (e.g., a clear image over a selected depth of focus) as described in more detail below.

[**0034**] Wavefront coding element **14** is positioned, rotated and/or translated within optical system **10** by a motor and controller **30** to effect desired phase modification of wavefront **15**. Through feedback **32** with motor and controller **30**, digital image processor **20** has positional information of optical phase filter **14**; this information is utilized within digital image processor **20** to "undo" the spatial effects induced by optical phase filter **14** on the image formed at the detector **18**.

[**0035**] In one embodiment, optical phase filter **14** is at an aperture of optical imaging system **10** (or at an image of the aperture), such that the point spread function (PSF) of system **10** is substantially insensitive to misfocus and such that the optical transfer function (OTF) of system **10** has no zero-value regions within the passband of detector **18**. Because the OTF is devoid of zero value regions, digital image processor **20** may obtain final image **22** by undoing the spatial effects of optical filter **14**. Since the OTF is insensitive to misfocus, digital image processor **20** generates final image **22** with the desired imaging properties. U.S. Pat. No. 5,748,371 describes wavefront coding to extend depth of field and is incorporated herein by reference.

[**0036**] Through operation of motor and controller **30**, optical phase filter **14** may also be positioned within system **10** at a principal plane (or image of the principal plane), at an aperture stop (or image of the aperture stop), and/or at a lens (e.g., with optics **16**). Such positioning ensures that imaging system **10** minimizes vignetting. In one embodiment, optical phase filter **14** modifies only phase of the wavefront between object **12** and detector **16** so as to minimize energy losses within system **10**. Those skilled in the art appreciate that filter **14** may be incorporated with optics **16** (e.g., as a wavefront encoded surface of an optical element representing optics **16**).

[**0037**] As described earlier, motor and controller **30** positions, rotates and/or translates optical phase filter **14** within system **10**. **FIGS. 2A, 2B**, 2C, 2D, 2E and 2F illustrate various exemplary mechanical movements and configurations of filter **14** relative to the optical footprint **40** of wavefront **15** at filter **14**. For example, in one embodiment illustrated in **FIG. 2A**, motor and controller **30** positions filter **14**A within system **10** in the pathway of wavefront **15** (position A, **FIG. 2A**), and alternatively positions filter **14**A out of the pathway of wavefront **15** (position B, **FIG. 2A**) by translational movement **42**. In such an embodiment, filter **14**A therefore affects wavefront **15** in position A, and has no effect on the wavefront in position B.

[**0038**] Those skilled in the art appreciate that another like filter **14**A may also be included within a system of this embodiment so as to provide, for example, two phase states of wavefront **15**. In a first phase state, wavefront **15** is affected by two filters **14**A (both in position A); in a second phase state, wavefront **15** is affected by one filter **14**A (one filter **14**A in position A, the other filter **14**A in position B).

[**0039**] In another embodiment shown in **FIG. 2B**, motor and controller **30** translates optical phase filter **14**B transverse to optical axis **17** (e.g., perpendicular to axis **17**), along movement direction **44**, to modify phase of wavefront **15** in at least two different positions of transverse movement **44**. For example, the phase modification of wavefront **15**, by filter **14**B, is different at position A within **FIG. 2B** as compared to position B. For example, the phase function implemented within filter **14**B is different depending upon whether footprint **40** is at position A or position B.

[**0040**] In yet another embodiment shown in **FIG. 2C** and **FIG. 2D**, motor and controller **30** rotates filter **14**C (rotational movement direction **46**) in a plane relative to optical axis **17** (e.g., the plane may for example be perpendicular to axis **17**) to modify phase of wavefront **15** as a function of rotational position (**0**, or "theta"). **FIG. 2D** illustrates that two like filters **14**C(**1**), **14**C(**2**) may be similarly positioned along optical axis **17**; motor and controller **30** then operates, for example, to rotate filters **14**C in opposite rotational directions **46**(**1**), **46**(**2**), as shown.

[**0041**] In a similar embodiment shown in **FIG. 2E**, motor and controller **30** translates filters **14**E(**1**), **14**E(**2**) in transverse motions **44**E(**1**), **44**E(**2**), respectively, to generate the desired phase effect on wavefront **15**. One or both of filters **14**E may be moved at any one time, depending upon the phase function of these filters.

[**0042**] In yet another embodiment, two phase filters **14**F(**1**), **14**F(**2**) are shown along optical axis **17** in **FIG. 2F**. In this configuration, motor and controller **30** may move one or both of filters **14**F along direction **48** to vary the combined wavefront phase caused by filters **14**F. In another embodiment, motor and controller **30** operate to tilt (e.g., along direction **49**) one or both of filters **14**F to provide desired phase change through the pair of filters **14**F, thereby "encoding" wavefront **15** in a way so as to achieve the desired image properties.

[**0043**] **FIG. 2A-2F** also illustrate that phase filter **14** may take various physical forms (e.g., rectangular, **FIG. 3B**, or circular, **FIG. 2A** and **FIG. 2C**) without departing from the scope hereof.

[**0044**] Accordingly, in one embodiment, the phase function of optical filter **14** is designed to induce the desired phase change of wavefront **15** according to the motion (e.g., movement directions **42**, **44**, **46**, **46**(**1**) and **46**(**2**), **44**E(**1**) and **44**E(**2**), **48** or **49**) of motor and controller **30**, such as described below in connection with **FIG. 3-FIG. 6**.

[0045] For example, the phase function P (equivalent to surface height) of filter **14C(1)** and **14C(2)** may for example take the phase form of Equation 1:

$$P(r,\text{theta})=A(r)*\text{Sum}[a_i \cos(w_i \text{ theta}+\text{phi}_i)]+B(r) \quad \text{(Eq. 1)}$$

[0046] where r denotes the filter radius value and theta denotes the filter angular coordinate. The summation (sum, or Σ) is over the index i and A(r) is a function of r multiplied by a function that is a sum of cosine terms. The composite phase modification of wavefront **15** passing through both filters **14C(1)**, **14C(2)** is then shown in Equation 2, that is motor and controller **30** adjusts phase of wavefront **15** according to rotational movement of filter **14C(1)** and **14C(2)** about optical axis **17**. In particular, assume for example that only one term of the cosine summation is used. If delta is zero, filters **14C(1)**, **14C(2)** are perfectly aligned. Motor and controller **30** thus operates to rotate filters **14C(1)**, **14C(2)** as a function of delta. With equal and opposite rotations (plus and minus delta, respectively) of filters **14C(1)**, **14C(2)**, the combined phase becomes:

$$\begin{aligned} P_c(r, \text{theta}) &= \{\text{Phase of filter } 14C(1) \text{ with rotation of } (+\text{delta})\} + \quad \text{(Eq. 2)} \\ &\quad \{\text{Phase of filter } 14C(2) \text{ with rotation of } (-\text{delta})\} \\ &= (A(r)*\cos(w*\text{theta}+\text{delta})+B(r)\}+ \\ &\quad \{A(r, \text{theta})*\cos(w*\text{theta}-\text{delta})+B(r)\} \\ &= A(r)*\cos[w*\text{theta}+\text{delta})+ \\ &\quad \cos(w*\text{theta}-\text{delta})]+2*B(r) \\ &= 2*\cos(\text{delta})A(r)\cos(w*\text{theta})+2*B(r) \end{aligned}$$

[0047] Accordingly, the combined phase (e.g., affecting the amount of variation within the depth of field) is modulated by different rotations **46** by motor and controller **30**, affecting delta through the term cos(delta) of Eq. 2. For rotation values where delta=90 degrees, the combined phase of the non-rotationally symmetric term can be reduced to zero. At this value of delta, the wavefront is minimally modified and the amount of extended depth of field, aberration tolerance, anti-aliasing, etc., is also minimized. For rotation values of delta that are multiples of 360 degrees, the combined phase of the non-rotationally symmetric term is maximized; at these values of delta, the amount of extended depth of field, aberration tolerance, and anti-aliasing are also maximized. The rotationally symmetric component B(r) is unchanged in form, and is optional. The cosine terms can be replaced by sums of cosines and hyperbolic functions with equivalent result.

[0048] A side view of filters **14C(1)**, **14C(2)** is shown in **FIG. 2G**. **FIG. 2G** is shown to illustrate that in the above example of Equation 2, the phase form (Eq. 1) of filters **14C** occurs on the first side **21** of each filter **14**, each facing upstream from detector **18**, as shown.

[0049] In another example, the phase function P (equivalent to surface height) of filters **14E(1)**, **14E(2)** may for example take the following form:

$$P(x,y)=\text{alpha } \{x^4+y^4\} \quad \text{(Eq. 3).}$$

[0050] where x and y are Cartesian coordinates of the phase function on filters **14E**. The phase of wavefront **15** is encoded by passing through the pair of filters **14E** according to translational movements delta **44E(1)**, delta **44E(2)**, respectively, of filters **14E**. Motor and controller **30** controls the transverse motion delta **44E(1)**, **44E(2)** along the x=y direction (along a 45 deg. angle), to selectively adjust the phase modification of wavefront **15**. With motion along the x=y direction, for example, the wavefront phase is altered in both the x and y directions as a function of motion delta **44E** (equal but opposite motions delta **44E(1)** and **44E(2)** occurring simultaneously). The combined phase implemented by the collection of filters **14E(1)** and **14E(2)** is then:

$$\begin{aligned} P_c(x, y) &= \{\text{Phase of filter } 14E(1) \text{ with translation of } (+\text{delta})\} - \quad \text{(Eq. 4)} \\ &\quad \{\text{Phase of filter } 14E(2) \text{ with translation of } (-\text{delta})\} \\ &= \text{alpha}\{(x-\text{delta})^4+(y-\text{delta})^4\}- \\ &\quad \text{alpha}\{(x+\text{delta})^4+(y+\text{delta})^4\} \\ &= -8 \text{ alpha}\{\text{delta}*(x^3+y^3)+\text{delta}^3*(x+y)\} \end{aligned}$$

[0051] The phase of filter **14E(2)** is the negative of the phase of filter **14E(1)** in this example. Accordingly, by moving filters **14E(1)**, **14E(2)** in equal but opposite directions, one provides positive phase change and one provides negative phase change. Notice that in this example phase form of the combined filters is a scaled cubic form ($\text{delta}*(x^3+y^3)$) and a linear phase component ($\text{delta}^3*(x+y)$). By changing the translation delta **44E** (i.e., controlled by motor and controller **30** along a line of x, y), the amount of cubic phase (and a corresponding amount of desired imaging property, e.g., depth of field) can be varied. This translation also brings with it a linear phase, prism-like optical axis or image origin translation. So, in eq. 4, the first term is like a separable cubic and the second term is linear term similar to a prism effect (or tilt). The translation can be used as is, or the mechanism that translates the component parts can be such that the component parts physically tilt away from optical axis **17** (see **FIG. 2F**) with translation to the complement of the linear phase; more terms may be added to the optical surfaces to purposely remove tilt.

[0052] A side view of filters **14E(1)**, **14E(2)** is shown in **FIG. 2H**. **FIG. 2** GH is shown to illustrate that in the above example of Equation 4, the phase form (Eq. 3) of filters **14E** occurs on the first side **23A** of filter **14E(1)** and the second side **23B** of filter **14E(2)**, as oriented to detector **18**, as shown. By reversing the directions of these filters, the phase of one can be the negative of the phase of the other.

[0053] It should be clear to those skilled in the art that phase filter **14** modifies wavefront **15** so that there is not an ideal focus at detector **18**; each object point of object **12** is instead spatially blurred over an extended range about along axis **17**. This blurring "encodes" wavefront **15** from object **12** to detector **18**; digital imaging processor **20** then "decodes" the image from detector **18** according to the position of phase filter **14** (via feedback **32**) to generate an enhanced final image **22**. Image **22** is "enhanced" for example since it has a selected depth of focus. Image **22** may be further enhanced since it is selectively insensitive to certain optical aberrations, for example misfocus-related aberrations such as chromatic aberration, curvature of field, spherical aberration, astigmatism, and/or temperature, or

pressure related misfocus associated with plastic optics. As such, optics **16** may advantageously employ plastic.

[**0054**] Moreover, detector **18** may create aliasing, such as when detector **18** is a CCD array. Accordingly, in one embodiment the phase function of phase filter **14** provides low-pass filtering to selectively inhibit effects of such aliasing as an enhancement to final image **22**.

[**0055**] In one embodiment, motor and controller **30** also controls the aperture of system **10**. By way of example, system **10** may include an electronically-controllable aperture **31** which responds to motor and controller **30** to adjust the aperture of system **10**. When aperture **31** is adjusted, therefore, the depth of field (or depth of focus) changes. Accordingly, motor and controller **30** may additionally move phase filter **14** to adjust the depth of focus (or depth of field) so as to maintain constant image properties irrespective of the change of aperture **31**, if desired. In a similar way, aberration tolerance and/or aliasing properties of system **10** may be adjusted to compensate for aperture variation. Digital image processor **20** may also utilize the aperture size information during processing by virtue of feedback **32**.

[**0056**] In one embodiment, motor and controller **30** also controls the focal length of system **10**. By way of example, motor and controller **30** may move optics **16** to effect the focal length adjustment. When the focal length is adjusted, therefore, the depth of field (or depth of focus) changes. Accordingly, motor and controller **30** may additionally move phase filter **14** to adjust the depth of focus (or depth of field) so as to maintain constant image properties irrespective of the change of focal length, if desired. In a similar way, aberration tolerance and/or aliasing properties of system **10** may be adjusted to compensate for focal length variation. Digital image processor **20** may also utilize the focal length information during processing by virtue of feedback **32**.

[**0057**] **FIG. 3** shows one optical imaging system **100** with an extended depth of field through operation of mechanically-adjustable optical phase filters **102**, **104**. An object **50** generates or reflects electromagnetic radiation **52** that is captured by optics **106** of imaging system **100** to image object **50** to a detector **108**; this imaging forms an optical wavefront **101** (illustrating points of constant phase from object **50**) that passes through filters **102**, **104**. The depth of field of imaging system **100** is "enhanced" as compared to the same imaging system without filters **102**, **104**, as described in more detail below. In one embodiment, one or both of filters **102**, **104** include aspheric optical elements. Those skilled in the art appreciate that although only two filters **102**, **104** are shown, additional filters may be included without departing from the scope hereof.

[**0058**] Filters **102**, **104** may move by operation of motor and controller **116**. When motor and controller **116** moves filters **102**, **104**, the phase of wavefront **101** is modified to accomplish one or more of the following: modify the depth of field of imaging system **100**, modify aberration-tolerance of imaging system **100**, and modify anti-aliasing effects of detector **108**. In one embodiment, such mechanical adjustment is effected by rotating one or both of filters **102**, **104** about optical axis **103**. To enhance the depth of focus, phase filters **102**, **104** are moved to alter the optical transfer function (OTF) of system **100** (and specifically of optics **106**) such that the resulting OTF is substantially insensitive to misfocus-related aberrations over a greater range of aberrations as compared to aberrations of optics **106** without filters **102**, **104**. In one embodiment, the variation of OTF is chosen by varying the amount of rotation of one phase filter **102** with respect to the other phase filter **104**.

[**0059**] In one arrangement, phase filter **102** and phase filter **104** are placed at or near the aperture stop (or at an image of the aperture stop) of optical system **100**, and one filter **104** is rotated relative to filter **102** (or vice versa). Filters **102**, **104** may alternatively be positioned at a principal plane (or at an image of the principal plane) of system **100**, or at a lens (e.g., at an optical element of optics **106**). Although filters **102**, **104** are shown adjacent to one another, in filters **102**, **104** may be spaced apart from one another (one or both being on or off of axis **103**) so long as they cooperate to change phase of wavefront **101** (when positioned by motor and controller **116**). In one arrangement, filters **102**, **104** are configured such that as one filter rotates, the other filter has an equal and opposite rotation to effect the phase modification onto wavefront **101**.

[**0060**] Detector **108** detects focused electromagnetic radiation of wavefront **103** to form a final image **110**, which is a digital representation of object **50**. Electromagnetic radiation **52** may include electromagnetic radiation in the visible spectrum, but may also include electromagnetic radiation in the infrared spectrum, ultraviolet spectrum, radio wave spectrum, or other spectrum (or mixtures thereof). Detector **108** may be analog detector (e.g., photographic film) or digital detector (e.g., a CCD or CMOS array).

[**0061**] **FIG. 4** shows optical imaging system **100** with a post processor **112**, for example a digital filter, that performs post-processing on the image detected by detector **108** to form a final image **114**. Post processor **112** removes certain effects of wavefront coding induced by filters **102**, **104** to form final image **114**, for example to provide a sharp and in-focus image. Optical system **100** is thus particularly well suited for use in digital imaging systems, such as digital cameras, because of the linear response of detector **108** in the form of a digital detector.

[**0062**] Rotation of filters **102**, **104** (e.g., each moving as in direction **46**, **FIG. 2C**) may occur through operation of a motor and controller **116**; motor and controller **116** may operate automatically or in response to user commands. Those skilled in the art appreciate that filters **102**, **104** may instead be manually adjusted and/or rotated. In one embodiment, initial manual adjustment occurs during assembly of optical system **100**, and further operational adjustment occurs by operation of motor and controller **116**, providing a large range of phase modification for wavefront **101**.

[**0063**] Optical system **100** may also allow for selective control of focusing, magnitude of the depth of field, and/or aberration reduction. More particularly, **FIG. 5** shows one housing **118** that may encase components of system **100**. A user interface **120** mounts with housing **118**, as shown. User interface **120** is in electrical communication with a controller **122** (e.g., a microprocessor) to control operation of motor and controller **116**, in response to user commands at interface **120**, so as to control positioning of filters **102**, **104** (to effect phase modification of wavefront **101**). Those skilled in the art appreciate that controller **122** may be part of motor and controller **116** as a matter of design choice. In one

embodiment, controller **122** receives information **117** from post processor **112**, the information for example detailing presence of misfocus and/or aberrations in final image **114**. In one example, information **117** is used by controller **122** to direct motor and controller **116** to move filters **102**, **104** and modify phase of wavefront **101**, such as to control depth of field and aberration tolerance within system **100**. This control then adjusts the image quality of final image **114**.

[**0064**] **FIG. 6** shows one process **200** facilitating operation of optical system **100**, **FIG. 5**. In step **202**, a user makes selections on user interface **120** regarding desired focusing, degree of depth of field, amount of anti-aliasing and/or aberration reduction within system **100**. In response to user selection, a signal is generated and communicated to controller **122**. In step **204**, controller **122** generates a command signal for communication to the motor and controller **116**. Motor and controller **116** then positions (e.g., rotates, translates, repositions) one or both of filters **102**, **104**, in step **206**. Detector **108** then captures the image of wavefront **101**, in step **208**. In step **210**, post processor **112** receives data from detector **108** and processes the data to reverse effects induced by filters **102**, **104**, to form final image **114** with user-selected imaging properties (e.g., depth of field, reduced aberrations, anti-aliasing).

[**0065**] **FIG. 7** shows one phase form **202** of wavefront filters **102**, **104** that may be used in optical system **100**. Phase form **202** includes a body **204** of optical material having variations in thickness that induces phase change on wavefront **101**. In one embodiment, form **302** implements a cubic phase function given by:

$$P(x,y)=\alpha x^3+\beta y^3+\delta x^2y+\gamma xy^2 \quad \text{(Eq. 5)}$$

[**0066**] where P(x,y) represents the phase function of filters **102**, **104** as a function of spatial coordinates (x,y), where (x,y) is the displacement location of form **202** from optical axis **103** (e.g., in **FIG. 7** only axis x is shown). The constants α, β, δ, and γ are chosen according to the particular characteristics desired for optical system **100**. For example, with $\alpha=\beta$, and $\delta=\gamma=0$, a rectangularly separable optical filter is formed. This leads to rectangularly separable processing within digital signal processor **112** in controlling depth of field and aberrations.

[**0067**] Another phase function for form **202** provides an MTF that is circularly symmetric. The wavefront phase of the optical filter can be written in polar coordinates as:

$$P(r,\theta)=\alpha f(r)\cos(n\theta) \quad \text{(Eq. 6)}$$

[**0068**] where f(r) is a function dependent upon radial position r from a center of the phase function and θ is angular position about the center. By way of example, one phase function $P(r,\theta)$ is a $r^3\cos(3\theta)$, where f(r) is r^3 and n is 3 (which also corresponds to Eq. 5 with the constants chosen as $\alpha=\beta$, $\delta=\gamma=-3\alpha$). The magnitude of the constant α determines the amount of phase change implemented by filter(s) **102**, **104**, thus providing the selected imaging properties (e.g., depth of field, aberration-tolerance, or anti-aliasing).

[**0069**] If two wavefront filters of the form of Eq. 6 are placed adjacent to and parallel to each other with the optical centers of each (r=0) at or near optical axis **103**, the effective phase from the combination can be approximated as:

$$P(r,\theta)_c=f(r)[\cos(n\{\theta-\phi\})+\cos(n\{\theta+\phi\})] \quad \text{(Eq. 7)}$$

[**0070**] where each filter has been rotated an equal and opposite amount given by angle ϕ. In such a configuration, only the relative angular position between the two wavefront filters is important. This particular symmetric alignment of Eq. 7 is used only to illustrate simplified mathematics. The form of the combination wavefront phase of Eq. 7 can be further simplified to:

$$P(r,\theta)_c=[2\cos(3\phi)]f(r)\cos(3\theta) \quad \text{(Eq. 8)}$$

[**0071**] The phase of the combination is seen to vary between twice the phase of a single surface (when $\phi=n(\pi/3)$, n=0, +/−1, +/−2, . . .) to zero or a constant surface (when $\phi=n(\pi/6)$, n=+/−1, +/−2, . . .) through change of the relative rotation between the filters **102**, **104**. If the rotation orientation of one of the filters is reversed, the phase is described by the addition of a negative sign, equivalent to a different rotation.

[**0072**] Other general phase forms may be described in polar coordinates, such as:

$$P(r,\theta)=\cos(n\theta)\,A(r,\theta)+B(r) \quad \text{(Eq. 9)}$$

[**0073**] where $A(r,\theta)$ and B(r) are functions of the radius (from optical axis **103**) and θ, and $\cos(n\theta)$ provides a non-rotationally symmetric rotational variation in the phase. The second term describes the general case, including displacement. For example, by fabricating the filter described by Eq. 6 onto the surface of a lens (e.g., form **202**, **FIG. 6**), $A(r,\theta)$ is equal to a $r^3\cos(3\theta)$ and B(r) is equal to ϕr^2, where ϕ describes the power of the lens.

[**0074**] From Eq. 8, placing two filters of the form of Eq. 9 adjacent to and parallel to each other, with equal and opposite rotations of ϕ, results in a combined wavefront phase that can be approximated as:

$$P(r,\theta)_c=[2\cos(n\phi)]A(r)\cos(n\theta)+2B(r) \quad \text{(Eq. 10)}$$

[**0075**] The rotationally symmetric component B(r) is unchanged by rotations while the non-rotationally symmetric combined wavefront phase can vary between twice that of a single element and zero depending on the relative rotation of the two filters.

[**0076**] The magnitudes of the non-rotationally symmetric components of the filters do not have to be identical. In such cases, the range of wavefront phase possible through rotation can be reduced. The rotationally symmetric terms B(r) also do not have to be identical.

[**0077**] Those skilled in the art appreciate that other phase functions may be implemented with filters **102**, **104** depending on the desired optical imaging properties for system **100**. Moreover, phase filters **102**, **104** may include reflective elements, holographic elements, elements including variations in index of refraction, spatial light modulators, holograms, adaptive optics, diffractive elements such as modulo $N\pi$ masks, and/or the like.

[**0078**] **FIG. 8** shows one optical system **400** similar to optical system **100** of **FIGS. 3 and 4**, with optics **406**, a first aspherical optical wavefront filter **402**, a second aspherical optical wavefront filter **404**, a non-linear analog detector **408** and post processor **412**, as well as automatic motor and controller **416**. Wavefront **403** is formed from electromagnetic radiation **52** from object **50** and is focused by optics **406** through wavefront filters **402**, **404** and to analog detector **408**. Automatic motor and controller **416** rotates one or more of wavefront filters **402**, **404** to effect mechanical

adjustment of the wavefront phase. However, because of the non-linearity of analog detector **408**—in that detector **408** has a non-linear response to the intensity of wavefront **52**—post processor **412** cannot perform the function of removing wavefront coding or spatial blur induced by wavefront filters **402**, **404** to produce a sharp and in-focus final image **414**. For non-linear analog detectors **408**, such a photographic film, the exposure curve is generally known or can be measured. Thus, the images detected by analog detector **408**, representative of wavefront **402**, may be linearized. Non-linear analog detector **408** is thus digitally scanned to generate a representation **418** of the image. The scanned representation **418** is then linearized to form a linearized image **420**. Post processor **412** (e.g., a digital filter) processes linearized image **420** in much the same way as post processor **112** processes image **420** to remove effects of wavefront filters **102**, **104**, to increase depth of field (depth of focus) in final image **414**.

[**0079**] Since certain changes may be made in the above methods and systems without departing from the scope hereof, it is intended that all matter contained in the above description or shown in the accompanying drawing be interpreted as illustrative and not in a limiting sense. It is also to be understood that the following claims are to cover certain generic and specific features described herein.

1. An optical imaging system to variably control image properties of an image, comprising:

at least one optical phase filter; and

a controller for positioning the optical phase filter to alter phase of a wavefront of the imaging system to select the properties of the image.

2. The optical imaging system of claim 1, the image properties comprising one or more of depth of focus, aberration tolerance and aliasing properties.

3. The optical imaging system of claim 1, the at least one optical phase filter comprising first and second optical filters.

4. The system of claim 1, the optical phase filter comprising a circularly symmetric phase form of $P(r,\theta)=A(r,\theta)+B(r)$.

5. The optical imaging system of claim 4, the optical phase filter comprising aspheric optical elements.

6. The optical imaging system of claim 1, the controller comprising a motor.

7. The optical imaging system of claim 1, the controller translating the optical phase filter between at least two positions wherein the wavefront passes through at least two separate portions of the optical phase filter.

8. The optical imaging system of claim 1, the controller rotating the optical phase filter about an optical axis to effect phase changes to the wavefront.

9. The optical imaging system of claim 1, the optical phase filter having a phase function of the form $P(x,y)+D(x_1, y_1)$.

10. The optical imaging system of claim 1, the optical phase filter being disposed proximal to one of an aperture stop of the optical system and an image of the aperture stop.

11 The optical imaging system of claim 1, further comprising (a) a detector for capturing an image of the object and (b) a post processor for processing data from the detector to reverse effects induced by the optical phase filter.

12. The optical imaging system of claim 11, wherein the post processor comprises a digital filter.

13. The optical imaging system of claim 1, further comprising a user interface for selecting magnitude of at least one of the image properties and a controller, responsive to user selections at the interface, to direct the controller to position the optical phase filter and affect the magnitude.

14. The optical imaging system of claim 1, wherein the controller comprises an automatic motor and controller.

15. The optical imaging system of claim 1, wherein the optical phase filter is disposed proximal to one of an aperture stop of the optical system and an image of the aperture stop.

16. The optical imaging system of claim 1, wherein the optical phase filter comprises a phase mask.

17. The optical imaging system of claim 18, wherein the phase mask implements a phase function of the form:

$$P(r,\theta)_c=[2\cos(3\phi)]\alpha r^3\cos(3\theta).$$

18. The optical imaging system of claim 18, wherein the phase mask implements a cubic phase function when moved by the means for moving.

19. The optical imaging system of claim 18, wherein the cubic phase function is of the form:

$$P(x,y)=\alpha x^3+\beta y^3+\delta x^2y+\gamma xy^2$$

where P(x,y) represents phase as a function of the spatial coordinates (x,y).

20. The optical imaging system of claim 1, the characteristics of the image comprising one or more of depth of focus, depth of field, aliasing properties, and aberration tolerance.

21. The optical imaging system of claim 1, further comprising means for adjusting one or both of aperture and focal length of the system, the controller repositioning the optical phase filter so that the imaging properties remain substantially fixed irrespective of the means for adjusting.

22. A method for variably affecting the wavefront of an optical system to selectively control imaging properties, the method comprising the steps of:

positioning one or more optical phase filters in the optical system; and

repositioning the optical phase filters to affect the imaging properties.

23. The method of claim 22, further comprising the step of capturing images from the system and post-processing a digital representation of the images to reverse effects induced by the optical phase filters.

24. The method of claim 23, further comprising the steps of automatically responding to user selection of the imaging properties to reposition the optical phase filters to effect phase changes of the wavefront to achieve the selected imaging properties.

25. The method of claim 22, further comprising adjusting one or both of focus and aperture of the imaging system, the step of repositioning comprising repositioning the optical phase filters to counter imaging effects associated with the step of adjusting one or both of focus and aperture.

26. A method for variably affecting the wavefront of an optical system to select image properties of the optical system, the method comprising the steps of:

moving a phase filter within the optical system to modify phase of the wavefront; and

forming a final image by post processing data from a detector of the optical system to reverse effects induced by the phase filter and achieve the selected image properties.

27. The method of claim 26, further comprising the step of modifying one or both of a focal length and aperture of the optical system, the step of moving comprising the step of moving the phase filter to compensate for modification of the focal length and aperture such that image properties remain substantially unchanged.

28. The method of claim 27, the image properties comprising one or more of depth of field, aberration tolerance and aliasing properties.

29. A method for variably affecting the wavefront of an optical system to select image properties of the optical system, the method comprising the steps of:

moving at least two phase filters within the optical system to modify phase of the wavefront; and

forming a final image by post processing data from a detector of the optical system to reverse effects induced by the phase filters and achieve the selected image properties.

* * * * *