US 20050231615A1

(19) United States

(12) Patent Application Publication

(10) Pub. No.: US 2005/0231615 A1

(43) Pub. Date: Oct. 20, 2005

Kitani

(54) IMAGE CAPTURE APPARATUS CAPABLE OF CORRECTING CAPTURED IMAGE

(75) Inventor: **Kazunari Kitani**, Yokohama-shi (JP)

Correspondence Address:
Canon U.S.A. Inc.
Intellectual Property Department
15975 Alton Parkway
Irvine, CA 92618-3731 (US)

(73) Assignee: **Canon Kabushiki Kaisha**, Tokyo (JP)

(21) Appl. No.: **11/092,248**

(22) Filed: **Mar. 29, 2005**

(30) **Foreign Application Priority Data**

Apr. 20, 2004 (JP) 2004-124407

Publication Classification

(51) **Int. Cl.**[7] **H04N 5/217**

(52) **U.S. Cl.** **348/241**; 348/251; 348/243

(57) **ABSTRACT**

An image capture apparatus includes a quantization precision selection device and an image data correction device. The quantization precision selection device selects a first quantization precision when an operation for reading out image data from an image sensor is performed a plurality of times for one exposure operation and selects a second quantization precision that is lower than the first quantization precision when an operation for reading out the image data from the image sensor is performed once for one exposure operation. The image data correction device performs correction processing of the image data using correction data having one of the first and second quantization precisions selected by the quantization precision selection device.

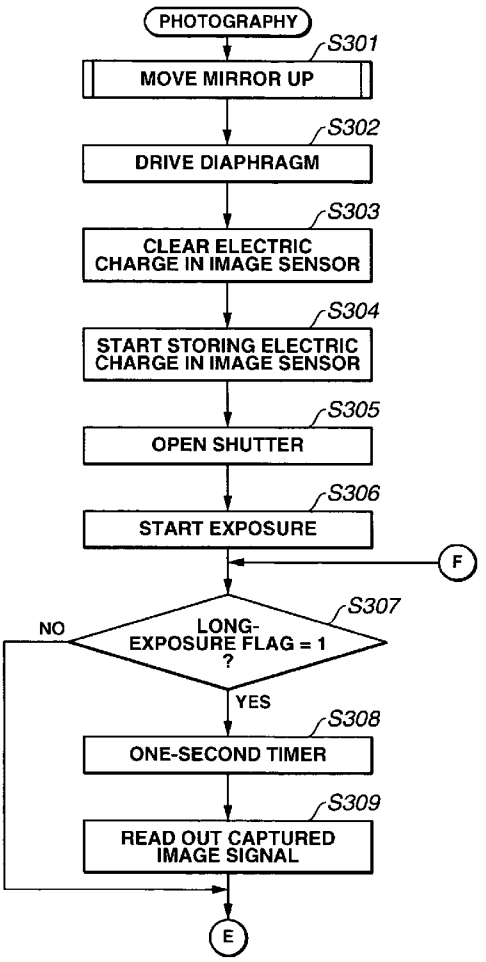

FIG.1

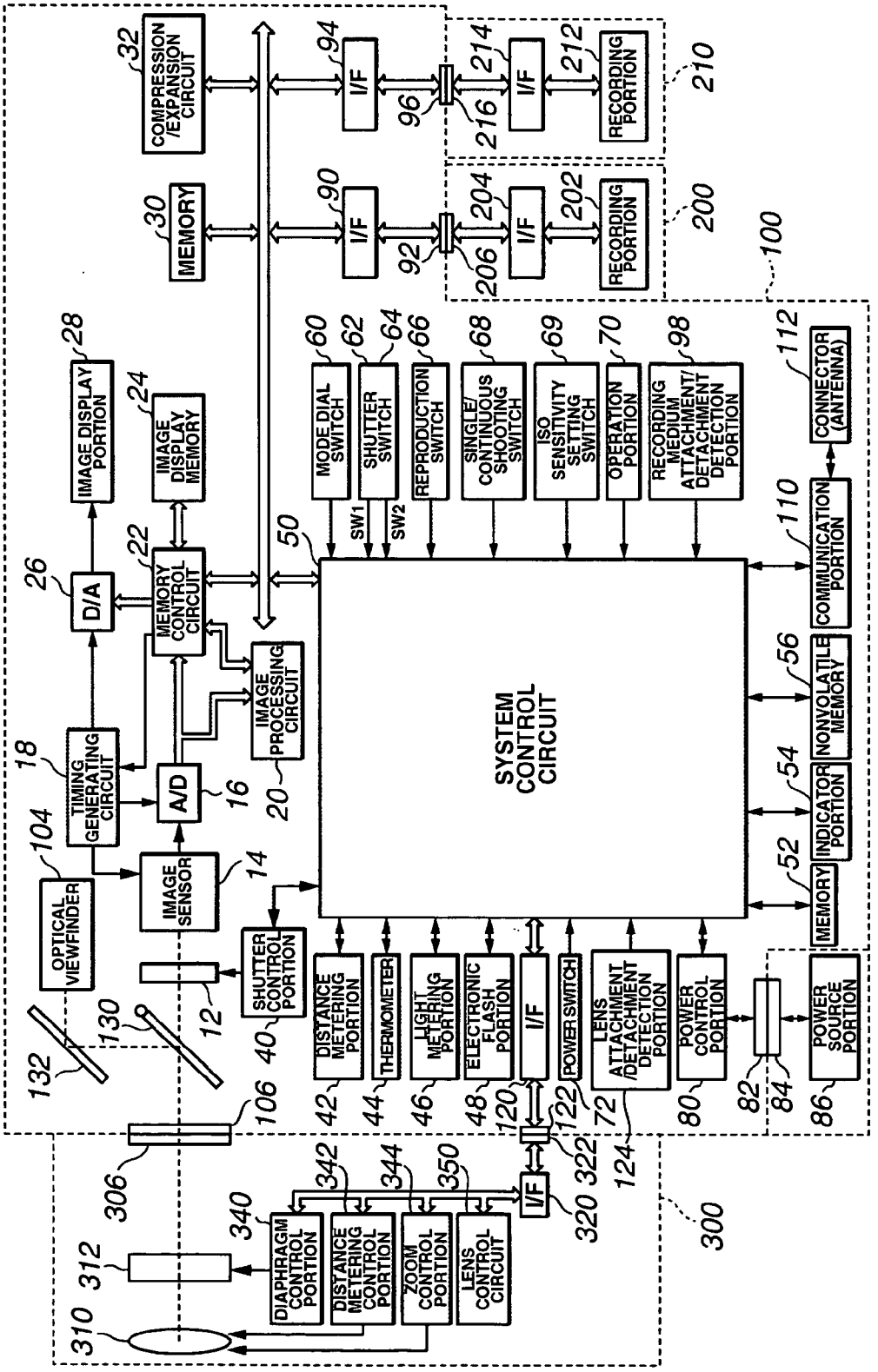
COMPRESSION /EXPANSION CIRCUIT
MEMORY
I/F
RECORDING PORTION
IMAGE DISPLAY PORTION
IMAGE DISPLAY MEMORY
D/A
MEMORY CONTROL CIRCUIT
IMAGE PROCESSING CIRCUIT
TIMING GENERATING CIRCUIT
A/D
IMAGE SENSOR
OPTICAL VIEWFINDER
SHUTTER CONTROL PORTION
MODE DIAL SWITCH
SHUTTER SWITCH
SW1
SW2
REPRODUCTION SWITCH
SINGLE/ CONTINUOUS SHOOTING SWITCH
ISO SENSITIVITY SETTING SWITCH
OPERATION PORTION
RECORDING MEDIUM ATTACHMENT/ DETACHMENT DETECTION PORTION
CONNECTOR (ANTENNA)
COMMUNICATION PORTION
NONVOLATILE MEMORY
INDICATOR PORTION
MEMORY
SYSTEM CONTROL CIRCUIT
DISTANCE METERING PORTION
THERMOMETER
LIGHT METERING PORTION
ELECTRONIC FLASH PORTION
POWER SWITCH
LENS ATTACHMENT /DETACHMENT DETECTION PORTION
POWER CONTROL PORTION
POWER SOURCE PORTION
DIAPHRAGM CONTROL PORTION
DISTANCE METERING CONTROL PORTION
ZOOM CONTROL PORTION
LENS CONTROL CIRCUIT

FIG.2

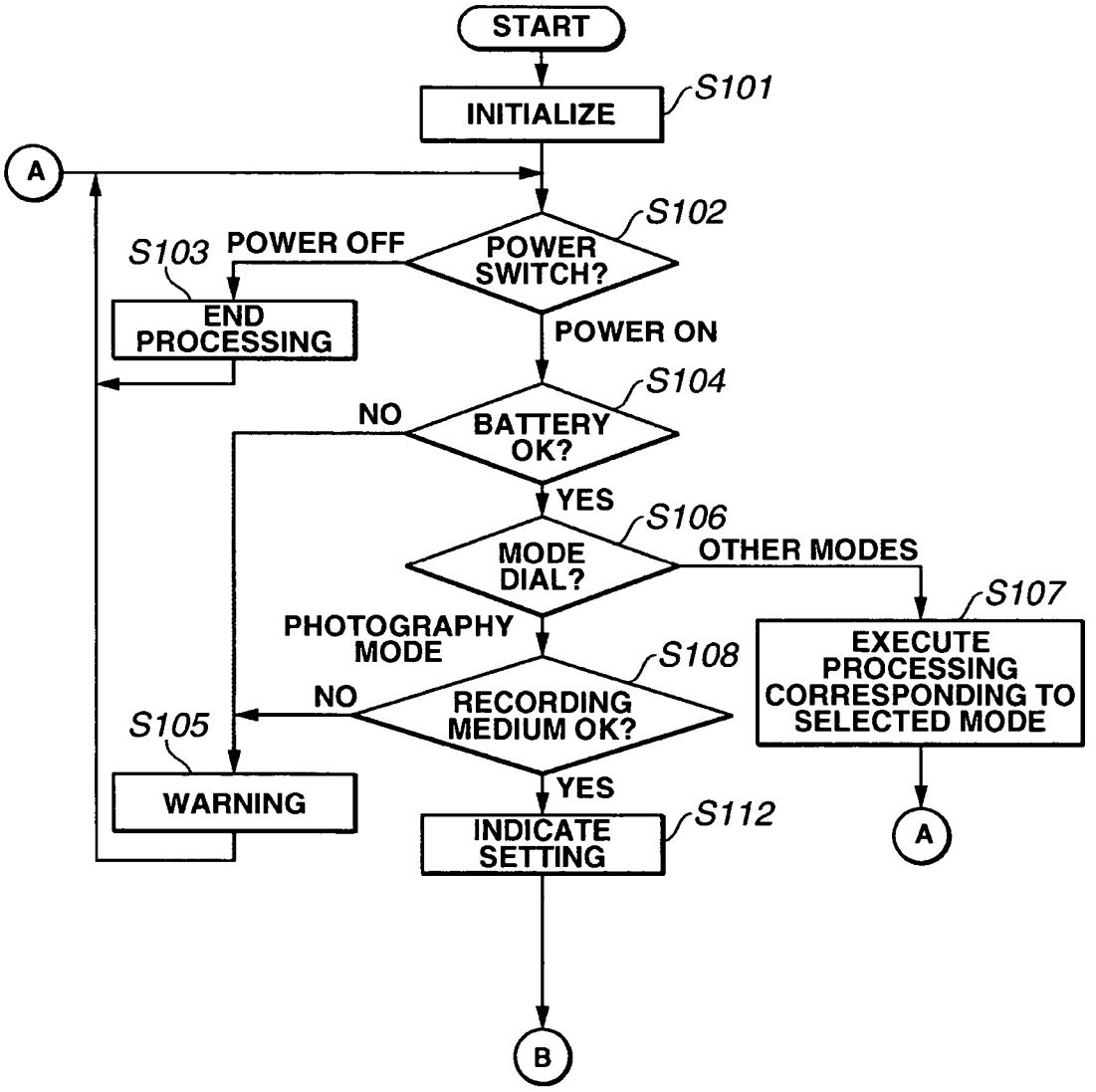
START
INITIALIZE
S101
A
S102
POWER SWITCH?
S103
POWER OFF
END PROCESSING
POWER ON
S104
BATTERY OK?
NO
YES
S106
MODE DIAL?
OTHER MODES
S107
EXECUTE PROCESSING CORRESPONDING TO SELECTED MODE
PHOTOGRAPHY MODE
S108
RECORDING MEDIUM OK?
NO
S105
WARNING
YES
INDICATE SETTING
S112
A
B

FIG.3

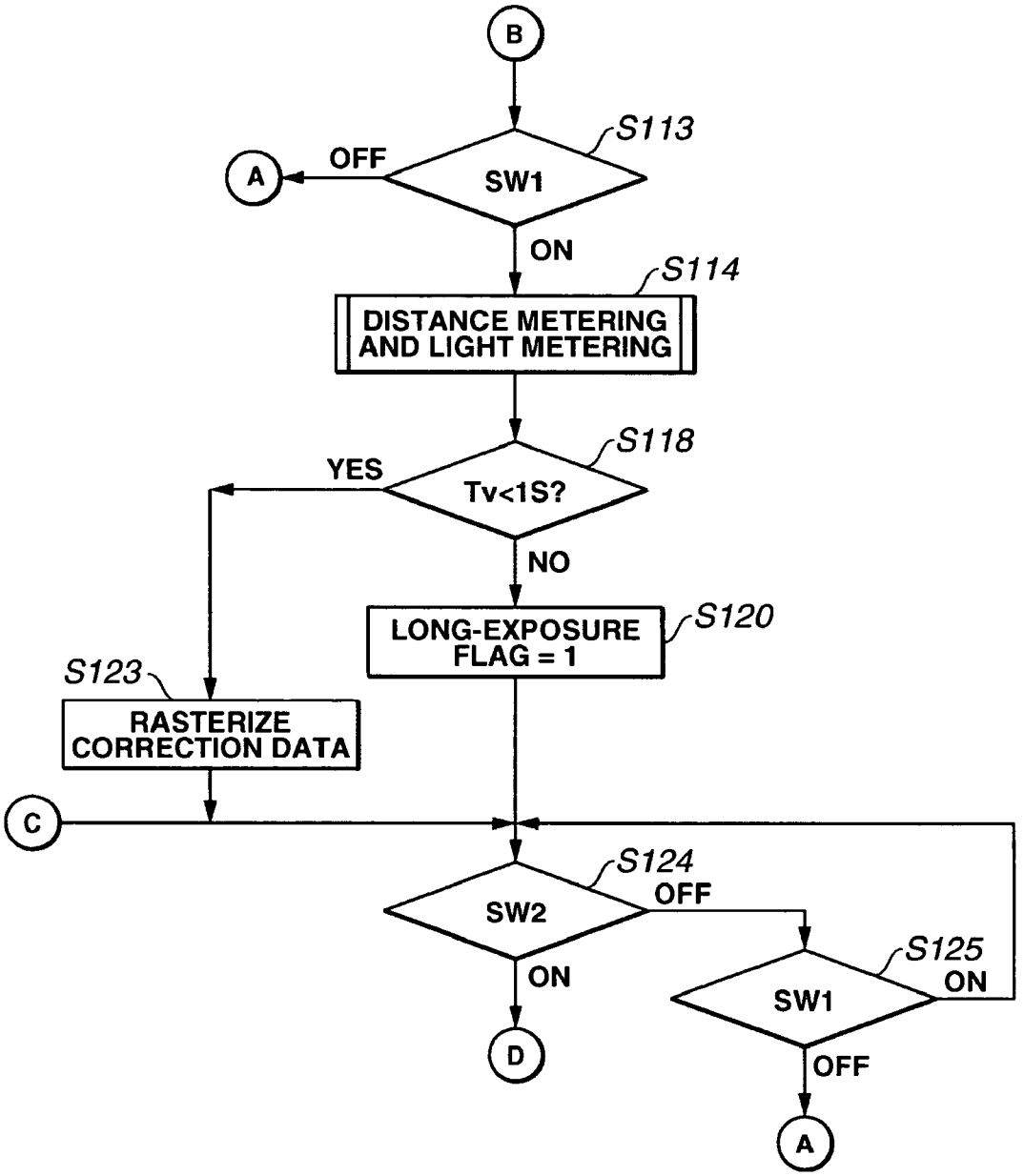
B
S113
OFF
A
SW1
ON
S114
DISTANCE METERING AND LIGHT METERING
S118
YES
Tv<1S?
NO
LONG-EXPOSURE FLAG = 1
S120
S123
RASTERIZE CORRECTION DATA
C
S124
OFF
SW2
ON
D
S125
ON
SW1
OFF
A

FIG.4

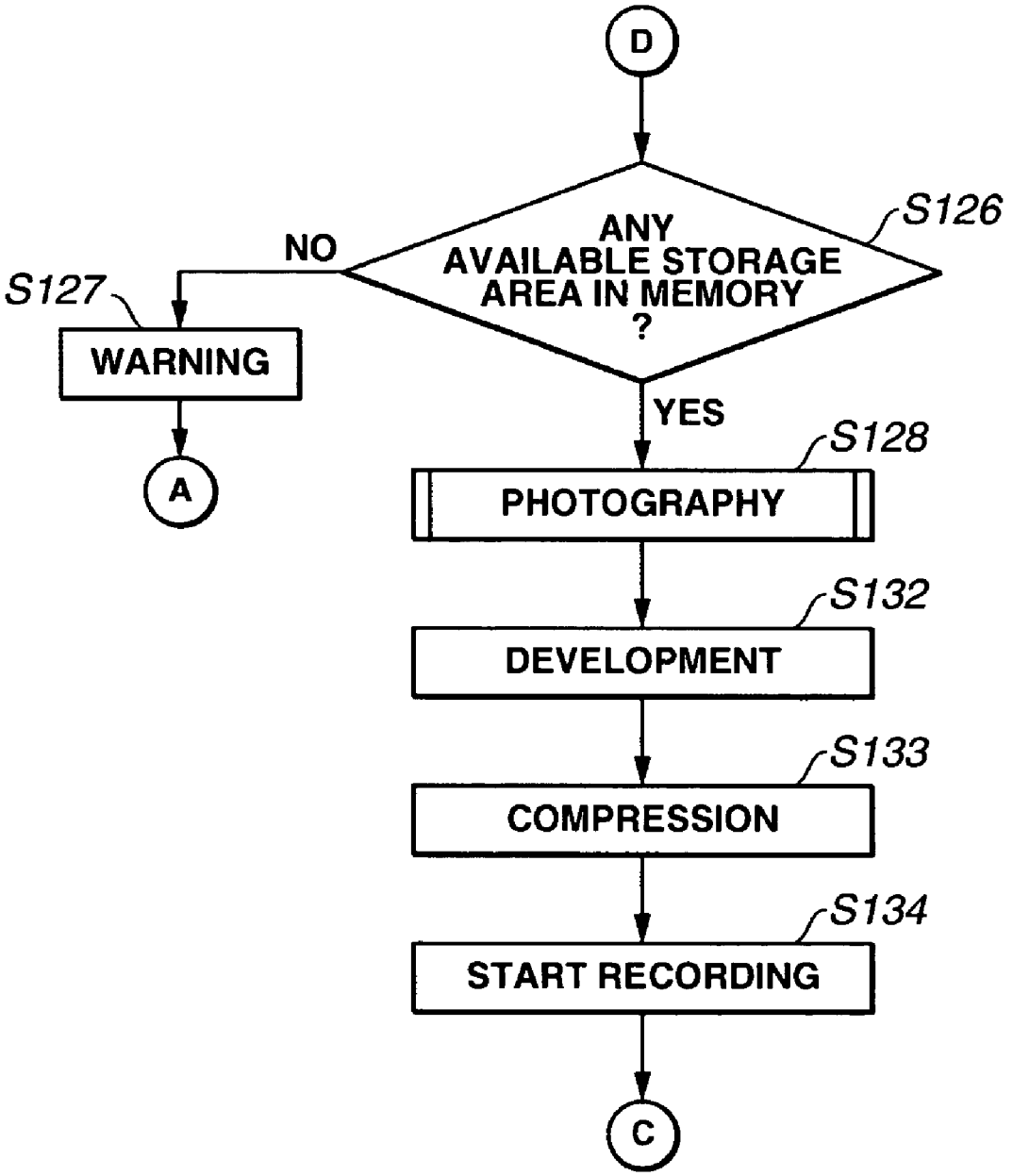
D
ANY AVAILABLE STORAGE AREA IN MEMORY ?
S126
NO
S127
WARNING
A
YES
S128
PHOTOGRAPHY
S132
DEVELOPMENT
S133
COMPRESSION
S134
START RECORDING
C

FIG.5

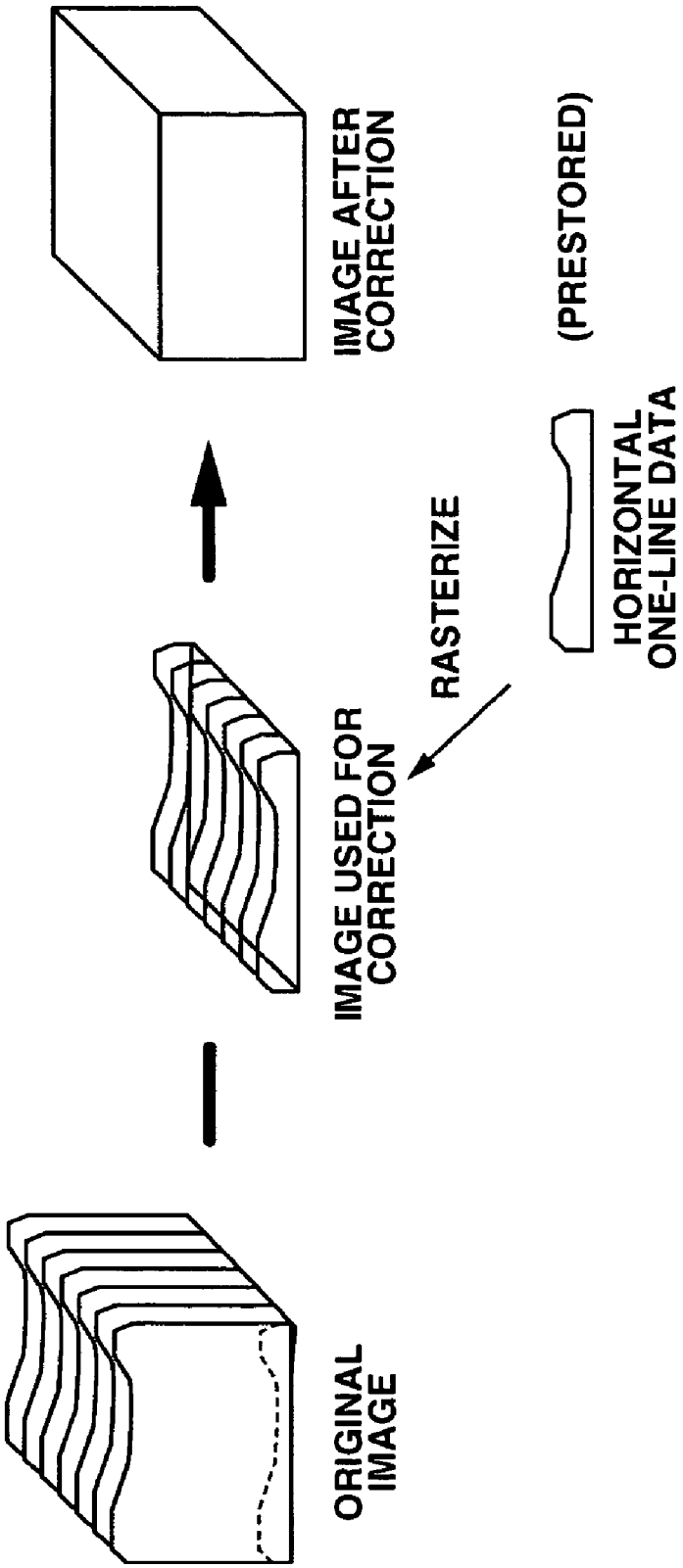
ORIGINAL IMAGE
IMAGE USED FOR CORRECTION
RASTERIZE
HORIZONTAL ONE-LINE DATA
(PRESTORED)
IMAGE AFTER CORRECTION

FIG.6

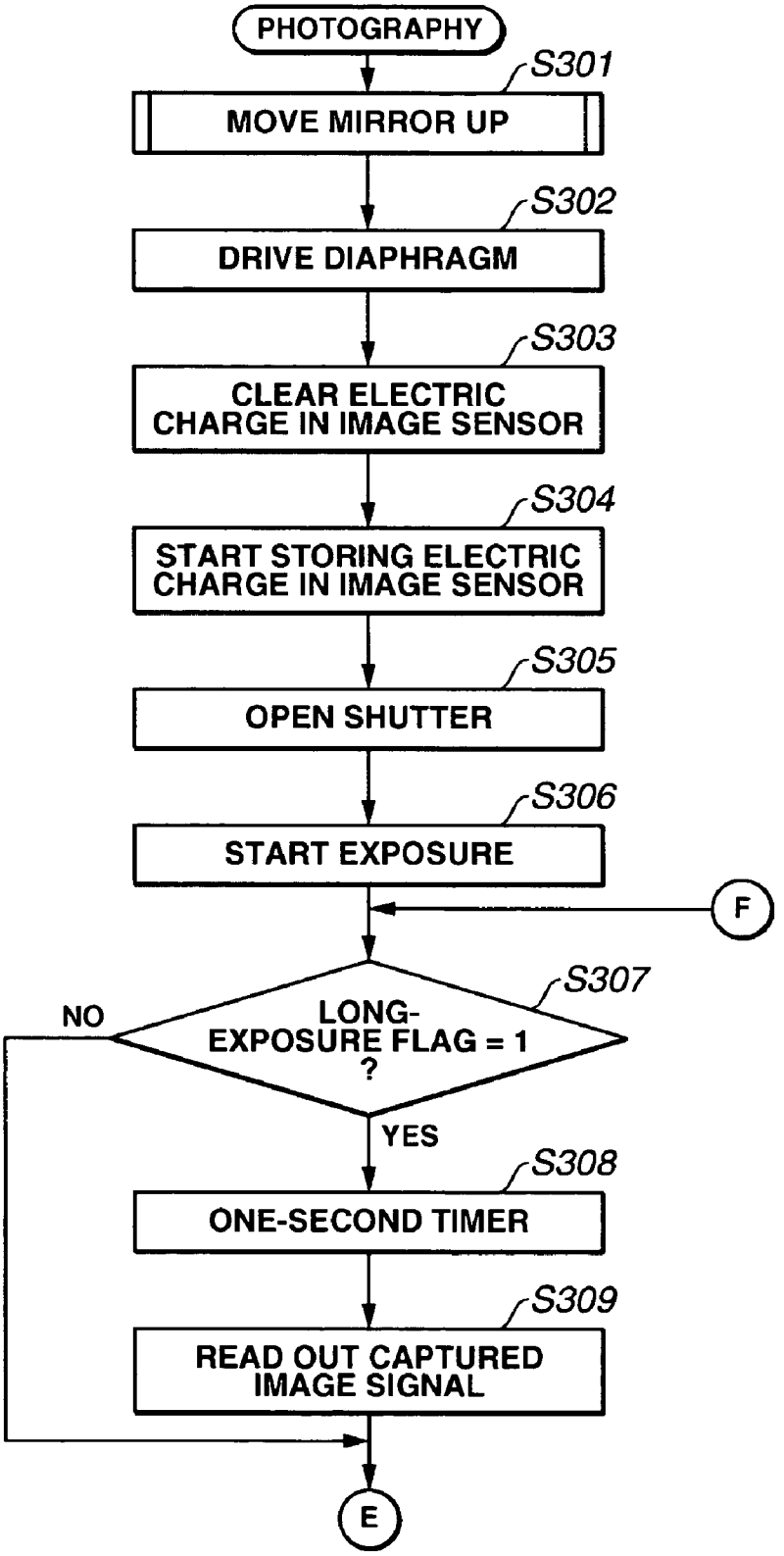
PHOTOGRAPHY
S301
MOVE MIRROR UP
S302
DRIVE DIAPHRAGM
S303
CLEAR ELECTRIC CHARGE IN IMAGE SENSOR
S304
START STORING ELECTRIC CHARGE IN IMAGE SENSOR
S305
OPEN SHUTTER
S306
START EXPOSURE
F
S307
LONG-EXPOSURE FLAG = 1 ?
NO
YES
S308
ONE-SECOND TIMER
S309
READ OUT CAPTURED IMAGE SIGNAL
E

FIG.7

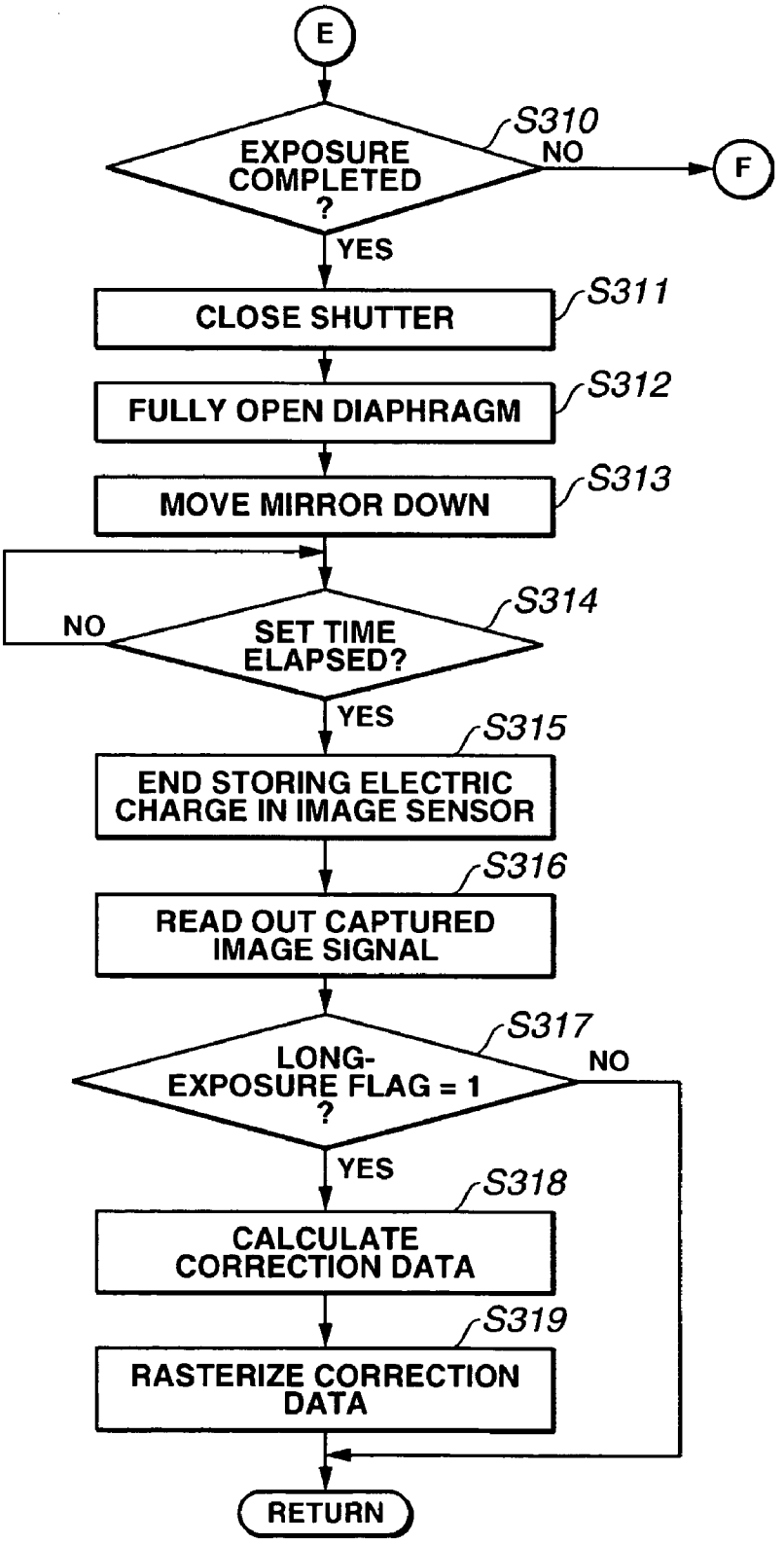
E
EXPOSURE COMPLETED ?
S310
NO
F
YES
CLOSE SHUTTER
S311
FULLY OPEN DIAPHRAGM
S312
MOVE MIRROR DOWN
S313
NO
SET TIME ELAPSED?
S314
YES
END STORING ELECTRIC CHARGE IN IMAGE SENSOR
S315
READ OUT CAPTURED IMAGE SIGNAL
S316
LONG-EXPOSURE FLAG = 1 ?
S317
NO
YES
CALCULATE CORRECTION DATA
S318
RASTERIZE CORRECTION DATA
S319
RETURN

FIG.8

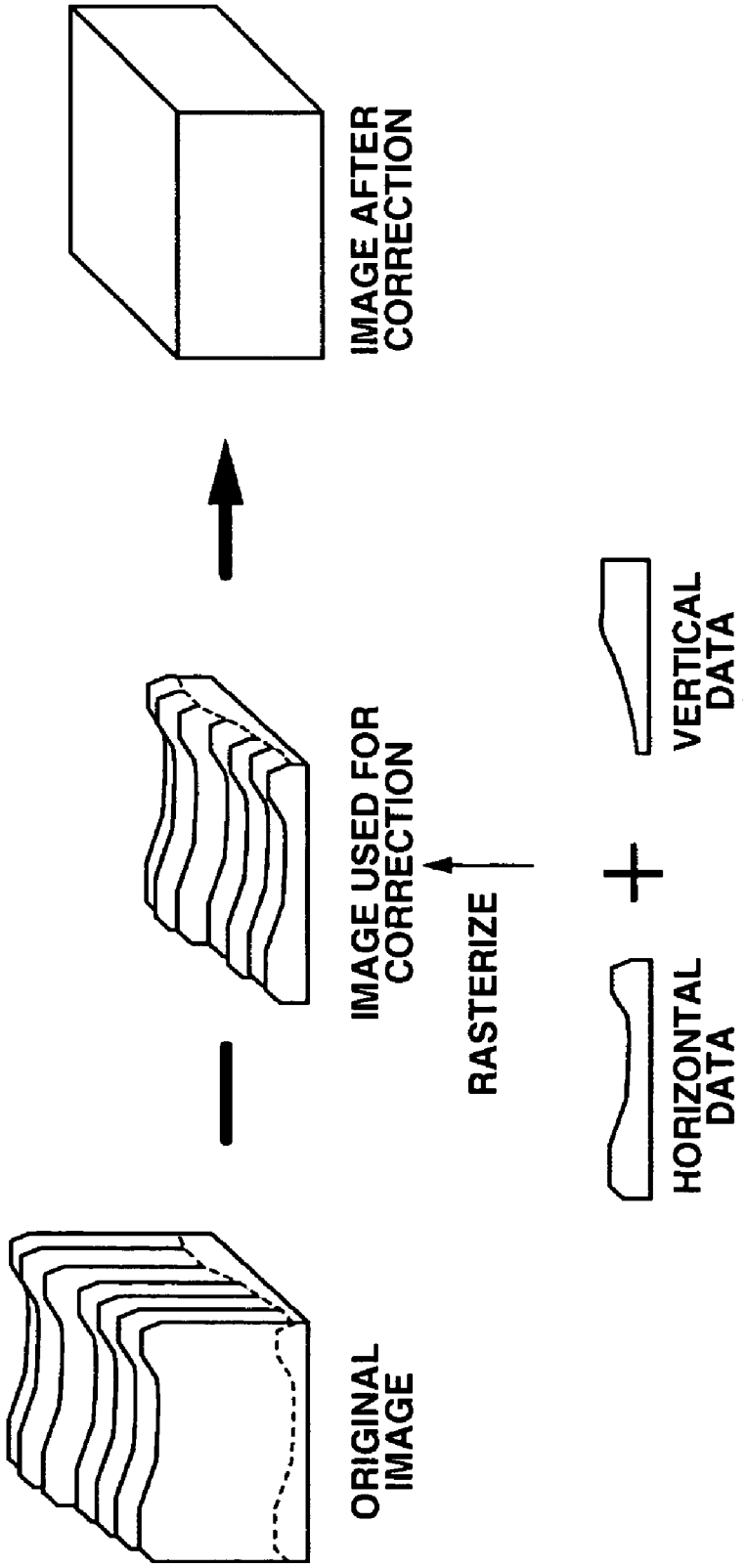
IMAGE AFTER CORRECTION
IMAGE USED FOR CORRECTION
ORIGINAL IMAGE
RASTERIZE
VERTICAL DATA
HORIZONTAL DATA

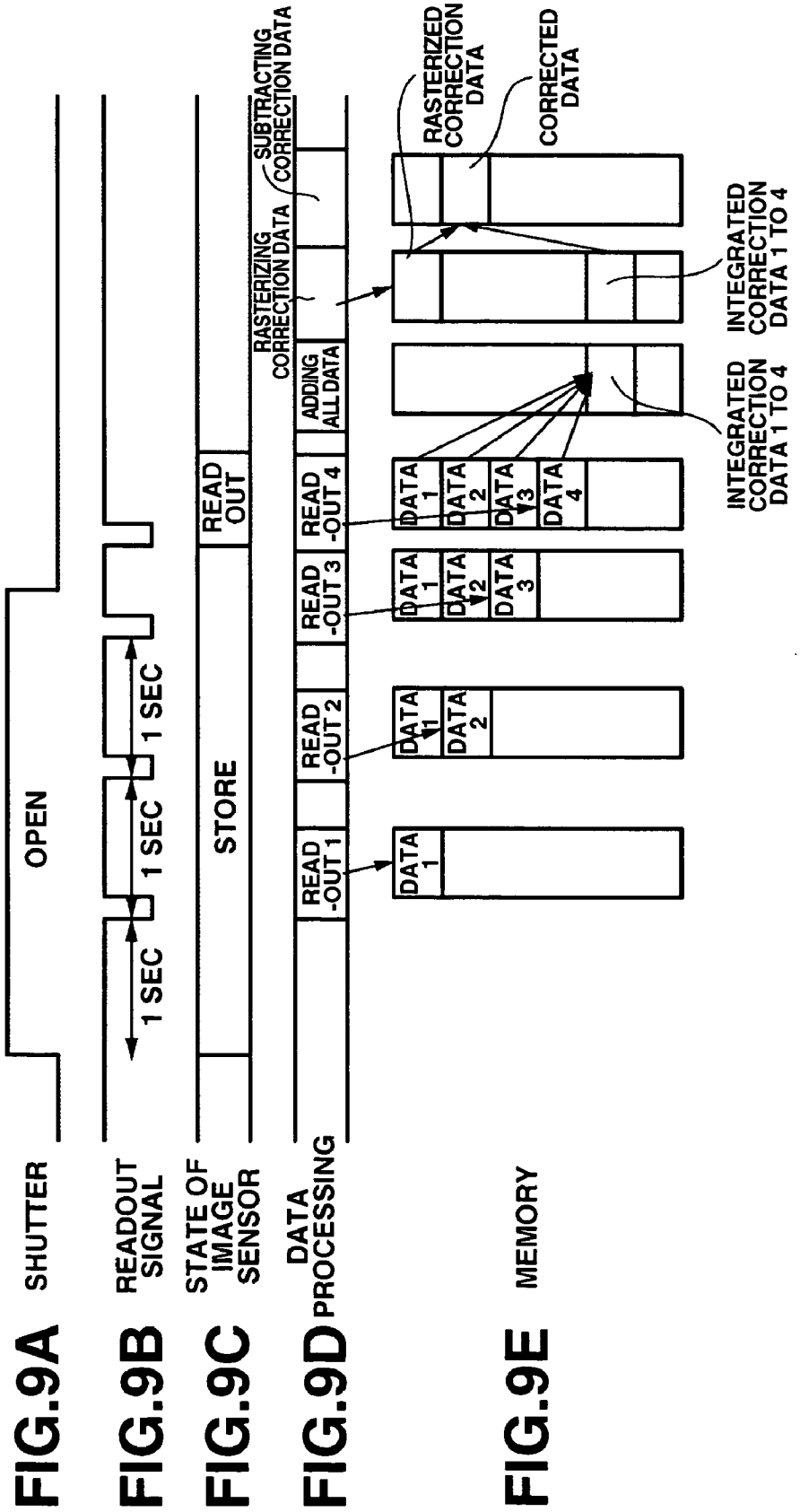

FIG.9A

FIG.9B

FIG.9C

FIG.9D

FIG.9E

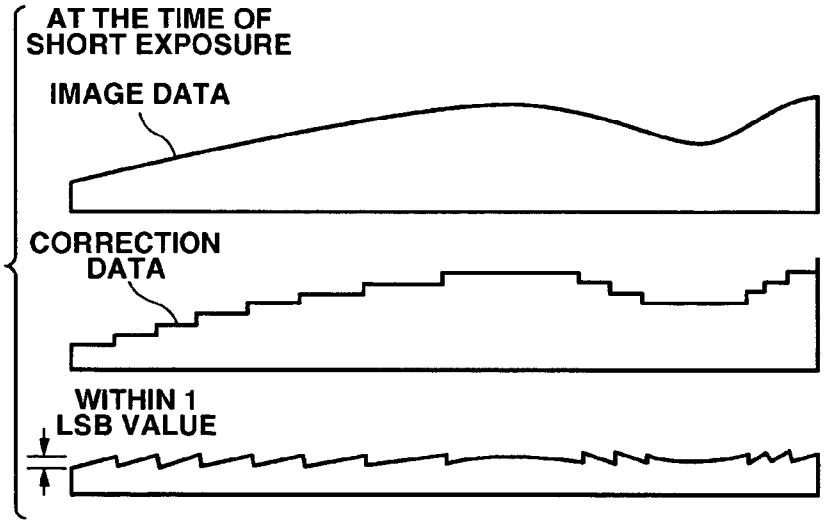

FIG.10A
PRIOR ART

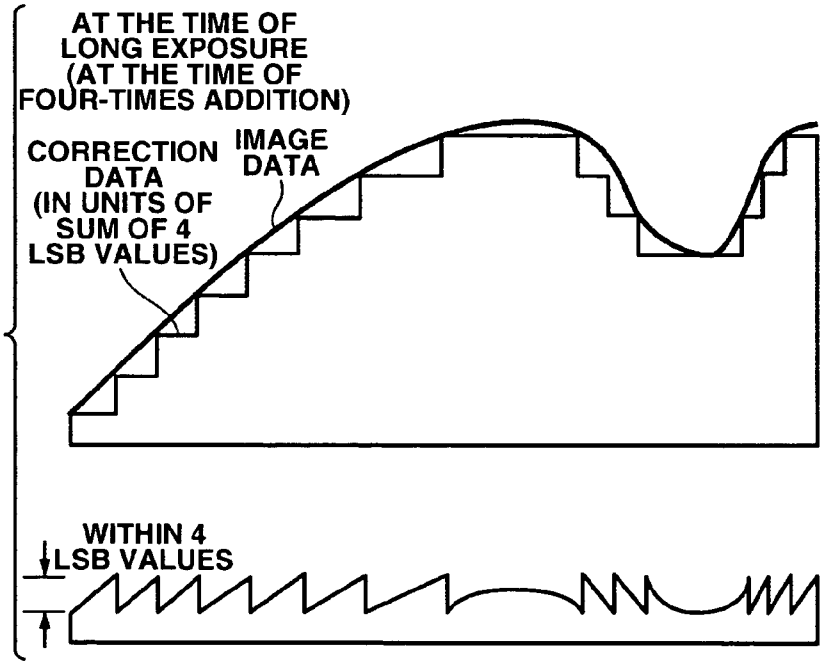

FIG.10B
PRIOR ART

IMAGE CAPTURE APPARATUS CAPABLE OF CORRECTING CAPTURED IMAGE

BACKGROUND OF THE INVENTION

[0001] 1. Field of the Invention

[0002] The present invention relates to an image capture apparatus, an image capture method, a computer program and a computer-readable recording medium for capturing, recording and reproducing a still image or a moving image, and more particularly to a technique for correcting a captured image.

[0003] 2. Description of the Related Art

[0004] Image capture apparatuses, such as electronic cameras, that have been commercially available in recent years include an image capture apparatus that uses a memory card having a solid-state memory element as a recording medium. This type of image capture apparatus captures a still image or a moving image using a solid-state image sensor, such as a CCD (charge-coupled device) or a CMOS (complementary metal-oxide semiconductor) sensor, and records or reproduces the captured image on or from the memory card.

[0005] In capturing an image using a solid-state image sensor, such as a CCD or a CMOS sensor, the image capture apparatus is capable of performing dark noise correction. In the dark noise correction, an arithmetical operation is performed using dark image data and originally captured image data. The dark image data is read out from the image sensor after charge storage is performed in the same manner as in an exposure operation while the image sensor is not exposed to light. The originally captured image data is read out from the image sensor after charge storage is performed while the image sensor is exposed to light.

[0006] However, in the conventional image capture apparatus, a shutter release time lag is increased by a period of time required for obtaining dark image data, so that a user may miss an important photo opportunity.

[0007] Japanese Laid-Open Patent Application No. 2003-333434 discloses a horizontal dark shading correction method using one-dimensional correction data in order to provide an image capture apparatus, an image capture method, a program and a recording medium that are capable of preventing image quality deterioration by reducing a circuit system noise, i.e., a fixed pattern noise which is generated as dark offset by voltage fluctuations caused by the resistance component of a power line in an image sensor or variations of image sensors, while minimizing the number of times of obtaining dark image data.

[0008] When long exposure is performed, particularly, under the condition that an increase in a dark current component is not negligible, e.g., high temperature or high ISO sensitivity, it is necessary to limit an output voltage from an image sensor including a dark current to a range that does not exceed the dynamic range of an analog processing portion.

[0009] In order to solve the above problem, generally, the output level of an optical black portion of an image sensor is detected, and a clamping circuit using this level as black reference is employed.

[0010] Japanese Laid-Open Patent Application No. 2001-326850 discloses a method for solving the above problem by using an image capture system. In this image capture system, when an exposure time exceeds a predetermined time, readout from an image sensor is performed a plurality of times during a single exposure operation to obtain a plurality of video signals. The plurality of video signals are recorded on a recording medium. Then, a single video signal is created by performing an arithmetical operation on the recorded plurality of video signals.

[0011] However, the above-described image capture apparatus capable of performing horizontal dark shading correction has the following problem when long exposure is performed. Correction data used for horizontal dark shading correction is obtained as horizontal one-line correction data by performing dark image photography during the manufacturing process of image capture apparatuses and performing a projection operation on an image obtained by the dark image photography.

[0012] In performing dark shading correction using the correction data, readout is performed a plurality of times to secure dynamic range when long exposure is performed. When readout is performed a plurality of times, a circuit noise is generated every time readout is performed. Therefore, it is necessary to perform horizontal dark shading correction for every readout operation. Accordingly, with respect to image data that is finally obtained by an arithmetical operation using all of the read-out images, horizontal dark shading correction has to be performed in total a number of times corresponding to the number of times that readout is performed. Therefore, a shutter release time lag increases, so that a user may miss a photo opportunity. In addition, since quantization errors that occur during horizontal dark shading correction are accumulated, image quality may deteriorate in the case of a photography mode in which readout is performed a plurality of times.

[0013] **FIGS. 10A and 10B** illustrate horizontal dark shading correction that is performed as described above on dark image data. In the case of short exposure shown in **FIG. 10A**, correction is performed only once. Correction data in this case has a resolution of 1 LSB (least significant bit) value. Image data after dark noise correction (dark image) is data that has been adequately corrected with a precision of 1 LSB value or less.

[0014] In the case of long exposure shown in **FIG. 10B**, results of correction performed a plurality of times are added together. In this case, the following problem arises. Let n represent the number of times of correction. Then, image data can be considered to have been corrected using correction data having a resolution of the sum of n LSB values in total. An image signal obtained from the image sensor retains image information having a resolution of 1 LSB value even after the addition operation, although the image signal contains quantization errors and noise components.

[0015] However, if correction data used for the correction operation has a resolution of the sum of n LSB values (n=4 in the case of **FIG. 10B**), image data after dark noise correction becomes image data having only a precision of the sum of 4 LSB values. In this case, a discontinuous image results. For example, if dark shading correction in the horizontal direction is performed, an image having a vertically-striped pattern within an image frame results. Thus, the image quality of a captured image deteriorates.

SUMMARY OF THE INVENTION

[0016] The present invention has been made in consideration of the above situation, and has an aspect to provide an image capture apparatus, an image capture method, a computer program and a computer-readable recording medium that are capable of reducing image deterioration caused by accumulation of quantization errors even when correcting image data obtained by performing readout a plurality of times.

[0017] In one aspect of the present invention, an image capture apparatus includes a quantization precision selection device configured to select a first quantization precision in a case where an operation for reading out image data from an image sensor is performed a plurality of times for one exposure operation and to select a second quantization precision that is lower than the first quantization precision in a case where an operation for reading out the image data from the image sensor is performed once for one exposure operation, and an image data correction device configured to perform correction processing of the image data using correction data having one of the first and second quantization precisions selected by the quantization precision selection device.

[0018] In another aspect of the present invention, an image capture method includes a quantization precision selection step of selecting a first quantization precision in a case where an operation for reading out image data from an image sensor is performed a plurality of times for one exposure operation and selecting a second quantization precision that is lower than the first quantization precision in a case where an operation for reading out the image data from the image sensor is performed once for one exposure operation, and an image data correction step of performing correction processing of the image data using correction data having one of the first and second quantization precisions selected by the quantization precision selection step.

[0019] In a further aspect of the present invention, a computer program causes a computer to perform the above-described image capture method.

[0020] In a further aspect of the present invention, a computer-readable recording medium has the above-described computer program recorded thereon.

[0021] Other features and advantages of the present invention will become apparent to those skilled in the art upon reading of the following detailed description of embodiments thereof when taken in conjunction with the accompanying drawings, in which like reference characters designate the same or similar parts throughout the figures thereof.

BRIEF DESCRIPTION OF THE DRAWINGS

[0022] The accompanying drawings, which are incorporated in and constitute a part of the specification, illustrate embodiments of the invention and, together with the description, serve to explain the principles of the invention.

[0023] **FIG. 1** is a block diagram showing an example of the construction of an electronic camera according to an embodiment of the invention.

[0024] FIGS. **2** to **4** show a flowchart illustrating the photographing operation procedure of an image processing apparatus included in the electronic camera according to the embodiment.

[0025] **FIG. 5** is a diagram illustrating correction of an original image using horizontal dark shading correction data.

[0026] **FIGS. 6 and 7** show a flow chart illustrating an example of the photography procedure of the image processing apparatus according to the embodiment.

[0027] **FIG. 8** is a diagram illustrating correction of an original image using one-dimensional correction data in both the vertical and horizontal directions according to the embodiment.

[0028] **FIGS. 9A** to **9**E are diagrams illustrating the sequence of a readout operation performed a plurality of times at the time of long exposure according to the embodiment.

[0029] **FIGS. 10A and 10B** are diagrams illustrating an example of conventional dark noise correction.

DETAILED DESCRIPTION OF THE EMBODIMENTS

[0030] Embodiments of the invention will be described in detail below with reference to the drawings. However, the dimensions, materials, shapes and relative positions of the constituent parts shown in the embodiments can be changed as convenient depending on various conditions and on the structure of the apparatus adapted to the invention, and the invention is not limited to the embodiments described herein.

[0031] **FIG. 1** is a block diagram showing an example of the construction of an electronic camera, which serves as an image capture apparatus according to an embodiment of the invention.

[0032] Referring to **FIG. 1**, the electronic camera includes an image processing apparatus **100** and a lens unit **300**. The image processing apparatus **100** includes a shutter **12** and an image sensor **14**. The shutter **12** has a stop function of controlling the amount of exposure of the image sensor **14**. The image sensor **14** converts an optical image into an electrical signal.

[0033] The lens unit **300** includes a photographing lens **310**, a diaphragm **312** and a lens mount **306**. The image processing apparatus **100** further includes a lens mount **106** and a mirror **130**. A light beam incident on the photographing lens **310** is guided to the image sensor **14** via the diaphragm **312**, the lens mounts **306** and **106**, the mirror **130** and the shutter **12** in a single-lens reflex fashion and is focused as an optical image on the image sensor **14**.

[0034] The image processing apparatus **100** further includes an analog-to-digital (A/D) converter **16**, a timing generating circuit **18**, a digital-to-analog (D/A) converter **26**, a memory control circuit **22** and a system control circuit **50**. The A/D converter **16** converts an analog signal output from the image sensor **14** into a digital signal. The timing generating circuit **18** supplies clock signals or control signals to the image sensor **14**, the A/D converter **16** and the D/A converter **26** and is controlled by the memory control circuit **22** and the system control circuit **50**.

[0035] The image processing apparatus **100** further includes an image processing circuit **20**, an exposure (shutter) control portion **40** and a distance metering portion **42**.

The image processing circuit **20** performs predetermined pixel interpolation processing and color conversion processing on data from the A/D converter **16** or data from the memory control circuit **22**. The image processing circuit **20** further performs a predetermined arithmetic operation using captured image data as needed. On the basis of a result of the arithmetic operation, the system control circuit **50** performs AF (auto focusing), AE (auto exposure) and EF (electronic flash) processing in the TTL (through the lens) method to control the shutter control portion **40** and the distance metering portion **42**.

[**0036**] In addition, the image processing circuit **20** performs a predetermined arithmetic operation using captured image data and performs AWB (auto white balance) processing in the TTL method on the basis of a result of the arithmetic operation.

[**0037**] The image processing apparatus **100** further includes an image display memory **24**, a memory **30** and a compression/expansion circuit **32**. The memory control circuit **22** controls the A/D converter **16**, the timing generating circuit **18**, the image processing circuit **20**, the image display memory **24**, the D/A converter **26**, the memory **30** and the compression/expansion circuit **32**.

[**0038**] Data from the A/D converter **16** is written into the image display memory **24** or the memory **30** via the image processing circuit **20** and the memory control circuit **22** or via the memory control circuit **22**.

[**0039**] The image processing apparatus **100** further includes an image display portion **28**. The image display portion **28** is a thin film transistor liquid crystal display (TFT LCD). Image data for display written in the image display memory **24** is displayed on the image display portion **28** via the D/A converter **26**. When captured image data is successively displayed on the image display portion **28**, an electronic viewfinder function can be implemented. In addition, the image display portion **28** can be turned on and off according to an instruction from the system control circuit **50**. When the image display portion **28** is turned off, the power consumption of the image processing apparatus **100** can be greatly reduced.

[**0040**] The memory **30** stores captured still images or moving images and has enough storage capacity to store a predetermined number of still images or a predetermined duration of moving images. Accordingly, even in the case of continuous photography or panoramic photography during which a plurality of still images are continuously captured, a large amount of images can be written into the memory **30** at a high speed. The memory **30** can also be used as a work area for the system control circuit **50**.

[**0041**] The compression/expansion circuit **32** compresses and expands image data using adaptive discrete cosine transform (ADCT) or the like. The compression/expansion circuit **32** loads an image stored in the memory **30**, compresses or expands the loaded image, and writes the processed data into the memory **30**.

[**0042**] The image processing apparatus **100** further includes a light metering portion **46**. The lens unit **300** further includes a diaphragm control portion **340** and a distance metering control portion **342**. The diaphragm control portion **340** controls the diaphragm **312** based on metered light information from the light metering portion **46**. The shutter control portion **40** controls the shutter **12** in cooperation with the diaphragm control portion **340**. The distance metering portion **42** performs AF (auto focusing) processing. The distance metering portion **42** receives a light beam incident on the photographing lens **310** via the diaphragm **312**, the lens mounts **306** and **106**, the mirror **130** and a distance-metering sub mirror (not shown) in the single-lens reflex method to determine the focusing state of an optical image formed thereon.

[**0043**] The image processing apparatus **100** further includes a thermometer **44** and an electronic flash portion **48**. The thermometer **44** detects the ambient temperature of an environment surrounding the electronic camera. If the thermometer **44** is incorporated in the image sensor **14**, a dark current generated in the image sensor **14** can be more accurately predicted. The light metering portion **46** performs AE (auto exposure) processing. The light metering portion **46** receives a light beam incident on the photographing lens **310** via the diaphragm **312**, the lens mounts **306** and **106**, the mirror **130** and a light-metering sub mirror (not shown) in the single-lens reflex method to determine the exposure state of an optical image formed thereon. The light metering portion **46** also has an EF (electronic flash) processing function associated with the electronic flash portion **48**. The electronic flash portion **48** has a function of projecting AF auxiliary light and a function of controlling the amount of flash.

[**0044**] In addition, as described above, the system control circuit **50** can perform exposure control and AF (auto focusing) control using the video TTL method for the exposure (shutter) control portion **40**, the diaphragm control portion **340**, and the distance metering control portion **342** on the basis of a result of an arithmetic operation performed by the image processing circuit **20** using image data obtained by the image sensor **14**.

[**0045**] In addition, AF (auto focusing) control may also be performed using a result of metering performed by the distance metering portion **42** and a result of an arithmetic operation performed by the image processing circuit **20** using image data obtained by the image sensor **14**. Exposure control may also be performed using a result of metering performed by the light metering portion **46** and a result of an arithmetic operation performed by the image processing circuit **20** using image data obtained by the image sensor **14**.

[**0046**] The system control circuit **50** controls the image processing apparatus **100** and contains a CPU (central processing unit). The image processing apparatus **100** further includes a memory **52**, an indicator portion **54** and an optical viewfinder **104**. The memory **54** stores therein constants, variables, programs, etc., used for operation of the system control circuit **50**. The indicator portion **54** has a liquid crystal display device, a speaker, etc., for indicating operating states, messages, etc., using characters, images, sounds, etc., in accordance with execution of programs by the system control circuit **50**. The indicator portion **54** is disposed in one or a plurality of places near an operation portion **70** of the image processing apparatus **100** which are easy to view, and is constituted by a combination of an LCD (liquid crystal display), an LED (light emitting diode), a sound generator, etc. Some functions of the indicator portion **54** are provided inside the optical viewfinder **104**.

[**0047**] Contents to be indicated on the LCD or the like among the indication contents of the indicator portion **54**

include single/continuous shooting indication, self-timer indication, compression ratio indication, number of recording pixels indication, number of recorded frames indication, number of remaining recordable frames indication, shutter speed indication, aperture value indication, exposure compensation indication, flash indication, red-eye reduction indication, macro photography indication, buzzer setting indication, remaining amount of clock battery indication, remaining amount of battery indication, error indication, plural digits indication, attachment/detachment indication for recording media **200** and **210**, attachment/detachment indication for the lens unit **300**, operation indication for communication interfaces, date and time indication, indication of state of connection to an external computer, etc.

[**0048**] Contents to be indicated inside the optical viewfinder **104** among the indication contents of the indicator portion **54** include in-focus indication, photography preparation completion indication, camera-shake warning indication, flash charging indication, flash charge completion indication, shutter speed indication, aperture value indication, exposure compensation indication, recording medium writing operation indication, etc.

[**0049**] Contents to be indicated by the LED or the like among the indication contents of the indicator portion **54** include in-focus indication, photography preparation completion indication, camera-shake warning indication, flash charging indication, flash charge completion indication, recording medium writing operation indication, macro photography indication, secondary battery charging indication, etc.

[**0050**] Contents to be indicated by the lamp or the like among the indication contents of the indicator portion **54** include a self-timer notification lamp, etc. The self-timer notification lamp may also be used as AF auxiliary light.

[**0051**] The image processing apparatus **100** further includes an electrically erasable/recordable nonvolatile memory **56**. The nonvolatile memory **56** stores therein programs, etc., and may be an EEPROM (electrically erasable programmable read-only memory). The nonvolatile memory **56** further stores therein various parameters, setting values for ISO sensitivity, etc., setting modes, and one-dimensional correction data used for horizontal dark shading correction.

[**0052**] In the case of an image sensor in which all horizontal lines share a readout circuit and noises generated when signals from the horizontal lines are transferred to the readout circuit are made small by, for example, improving a circuit layout, a vertical fixed-pattern noise is small and hence need not be corrected. In an image capture apparatus using such an image sensor, a fixed-pattern noise can be removed by correcting an original image using horizontal one-dimensional correction data. The one-dimensional correction data is created and written into the nonvolatile memory **56** during adjustment in the manufacturing process of electronic cameras. For example, the one-dimensional correction data can be data for one horizontal line formed by performing a projection operation on an image obtained by dark image photography.

[**0053**] In performing a projection operation in the manufacturing process, correction data is calculated with a precision of up to the decimal fraction part. When a projection operation is performed using outputs of 1024 pixels arranged in the vertical direction per one pixel row, for example, with an ordinary precision of 1 LSB value, all of the outputs of 1024 pixels are added together, and the obtained sum is divided by 1024 to obtain correction data with a precision of 1 LSB value. The correction data is calculated for every pixel row, so that horizontal one-line correction data is obtained.

[**0054**] In the present embodiment, information about decimal places is also stored as correction data in the storage means (nonvolatile memory **56**). More specifically, all of outputs of 1024 pixels are added together, and the obtained sum is divided by 1024 to obtain correction data up to, for example, the low-order four bits after the decimal point (four places of decimals). The correction data is calculated for every pixel row, so that horizontal one-line correction data is obtained. Thus, correction data is calculated with a precision of 1/16 LSB value and is then stored in the nonvolatile memory **56**.

[**0055**] The image forming apparatus **100** further includes operation portions **60**, **62**, **64**, **66**, **68**, **69** and **70** configured to allow the user to input various instructions to the system control circuit **50**. Each operation portion is a switch, a dial, a touch panel, a pointing device using visual-line detection, a speech recognition device, or a combination of some of these elements.

[**0056**] The mode dial switch **60** is operable to selectively set various functional photography modes including auto photography mode, program photography mode, shutter-priority photography mode, aperture-priority photography mode, manual photography mode, focal depth-priority mode, portrait photography mode, landscape photography mode, close-up photography mode, sport photography mode, night view photography mode, panoramic photography mode, etc.

[**0057**] The first shutter switch **62** (SW**1**) is turned on in response to the half depression of a shutter button (not shown) to issue instructions to start operations of AF (auto focusing), AE (auto exposure), AWB (auto white balance), EF (electronic flash), etc.

[**0058**] The second shutter switch **64** (SW**2**) is turned on in response to the complete depression of the shutter button (not shown). The shutter switch **64** (SW**2**) issues instructions to start a series of operations including an exposure process for converting a signal read out from the image sensor **14** into image data via the A/D converter **16** and writing the image data into the memory **30** via the memory control circuit **22**, a development process for performing arithmetic operations via the image processing circuit **20** and the memory control circuit **22**, and a recording process for reading out image data from the memory **30**, compressing the image data via the compression/expansion circuit **32** and writing the compressed image data into the recording medium **200** or **210**.

[**0059**] The reproduction switch **66** issues instructions to start a reproduction operation for reading out a captured image from the memory **30** or the recording medium **200** or **210** and displaying the read-out image on the image display portion **28**. The single/continuous shooting switch **68** is operable to set a single shooting mode in which only one frame image is captured when the second shutter switch **64**

(SW2) is pressed and then a standby state follows, and a continuous shooting mode in which several frame images are serially captured while the second shutter switch **64** (SW2) is kept pressed. The ISO sensitivity setting switch **69** is operable to set ISO sensitivity by changing the gain setting of the image sensor **14** or the image processing circuit **20**.

[**0060**] The operation portion **70** is composed of various buttons, touch panels, etc., including a menu button, a set button, a macro button, a multi screen reproduction page feed button, a flash setting button, a single/continuous/self-timer shooting switching button, a menu move +(plus) button, a menu move –(minus) button, a reproduced image move +(plus) button, a reproduced image move –(minus) button, a photographed image quality selection button, an exposure compensation button, a date/time setting button, a selection/switching button for selecting and switching various functions when performing photography and reproduction in the panoramic mode or the like, a determination/execution button for determining and executing various functions when performing photography and reproduction in the panoramic mode or the like, an image display ON/OFF switch for setting ON/OFF of the image display portion **28**, a quick review ON/OFF switch for setting a quick review function for automatically reproducing captured image data immediately before completion of photography, a compression mode switch for selecting the compression ratio of JPEG compression or selecting a CCDRAW mode for directly digitizing an image signal from the image sensor and recording the digitized image signal on a recording medium, a reproduction switch capable of setting various function modes, such as a reproduction mode, a multiscreen reproduction/erase mode and a PC connection mode, an AF mode setting switch capable of setting a one-shot AF mode in which an auto focusing action is started when the first shutter switch **62** (SW1) is pressed and, once an in-focus state is attained, the in-focus state is held, and a servo AF mode in which an auto focusing action is continued while the shutter switch **62** (SW1) is kept pressed.

[**0061**] The functions of the above-described plus buttons and minus buttons may be replaced with rotary dial switches to allow the user to more easily select numerical values or functions.

[**0062**] The image processing apparatus **100** further includes a power switch **72**. The power switch **72** is operable to selectively set a power-on mode and a power-off mode of the image processing apparatus **100**. In addition, the power switch **72** is also operable to selectively set power-on and power-off settings of various attachment devices, such as the lens unit **300**, an external flash unit (not shown), the recording medium **200** or **210**, etc.

[**0063**] The image processing apparatus **100** further includes a power control portion **80**. The power control portion **80** is composed of a battery voltage detection circuit, a DC-DC converter, a switch circuit for switching blocks to be energized, etc. The power control portion **80** detects the attachment of a battery, the type of a battery and the remaining amount of a battery. In accordance with a result of the detection and an instruction from the system control circuit **50**, the power control portion **80** controls the DC-DC converter to supply a necessary voltage to individual portions, including the recording medium **200** or **210**, for a necessary period.

[**0064**] The image processing apparatus **100** further includes a connector **82**. The connector **82** is connectable to a connector **84** of a power source portion **86**. The power source portion **86** is a primary battery, such as an alkaline battery or lithium battery, a secondary battery, such as a NiCd battery, NiMH battery or Li battery, or an AC adapter.

[**0065**] The image processing apparatus **100** further includes interfaces **90** and **94**, connectors **92** and **96**, and a recording medium attachment/detachment detection portion **98**. The interfaces **90** and **94** are provided for communication with the recording media **200** and **210**, such as memory cards or hard disks. The connectors **92** and **96** are connectable to connectors **206** and **216** of the recording media **200** and **210**, respectively. The recording medium attachment/detachment detection portion **98** detects whether the recording media **200** and **210** are attached to the connectors **92** and **96**, respectively.

[**0066**] In the present embodiment, two systems of interfaces and connectors for attaching recording media are provided in the image processing apparatus **100**. However, one or three or more systems of interfaces and connectors for attaching recording media may be provided. In addition, interfaces and connectors compliant with another standard, for example, the PCMCIA card standard or the CF (Compactflash®) card standard, may also be employed.

[**0067**] Furthermore, in cases where the interfaces **90** and **94** and the connectors **92** and **96** are compliant with, for example, the PCMCIA card standard or the CF (Compactflash®) card standard, various communication cards, such as a LAN card, a modem card, a USB card, an IEEE 1394 card, a P1284 card, a SCSI card or a PHS communication card, can be connected. Accordingly, image data and management information attached thereto can be transferred to and from another computer or a peripheral device such as a printer.

[**0068**] The image processing apparatus **100** further includes a mirror **132** adjacent to the optical viewfinder **104**. A light beam incident on the photographing lens **310** is guided to the optical viewfinder **104** via the diaphragm **312**, the lens mounts **306** and **106**, the mirrors **130** and **132** in the single-lens reflex method and is focused on the optical viewfinder **104** as an optical image to be viewable by the user. Accordingly, the user can take a photograph while viewing only an image on the optical viewfinder **104** without using the electronic viewfinder function provided by the image display portion **28**. In addition, some functions of the indicator portion **54**, for example, in-focus indication, camera-shake warning indication, flash charging indication, shutter speed indication, aperture value indication and exposure compensation indication, are provided inside the optical viewfinder **104**.

[**0069**] The image processing apparatus **100** further includes a communication portion **110** and a connector or antenna **112**. The communication portion **110** has various communication functions, such as RS23C, USB, IEEE 1394, P1284, SCSI, modem, LAN and wireless communication. The connector or antenna **112** is configured to connect the image processing apparatus **100** to another apparatus via the communication portion **110** or to perform wireless communication.

[**0070**] The image processing apparatus **100** further includes an interface **120**, a connector **122** and a lens

attachment/detachment detection portion **124**. The interface **120** is configured to connect the image processing apparatus **100** to the lens unit **300** inside the lens mount **106**. The connector **122** electrically connects the image processing apparatus **100** to the lens unit **300**. The lens attachment/detachment detection portion **124** detects whether the lens unit **300** is attached to the lens mount **106** and/or the connector **122**.

[**0071**] The connector **122** allows a control signal, a status signal, a data signal, etc., to be transferred between the image processing apparatus **100** and the lens unit **300**, and has the function of supplying electric currents having various voltages. The connector **122** may be configured to perform optical communication, voice communication or the like in addition to electrical communication.

[**0072**] The mirrors **130** and **132** guide a light beam incident on the photographing lens **310** to the optical viewfinder **104** in the single-lens reflex method. The mirror **132** can be a quick-return mirror or a half-reflection mirror.

[**0073**] The recording medium **200** can be a memory card, a hard disk or the like. The recording medium **200** includes a recording portion **202**, an interface **204** and a connector **206**. The recording portion **202** is, for example, a semiconductor memory or a magnetic disk. The interface **204** is provided for communicating with the image processing apparatus **100**. The connector **206** is connectable to the connector **92** of the image processing apparatus **100**.

[**0074**] Similar to the recording medium **200**, the recording medium **210** can be a memory card, a hard disk or the like. The recording medium **210** includes a recording portion **212**, an interface **214** and a connector **216**. The recording portion **212** is, for example, a semiconductor memory or a magnetic disk. The interface **214** is provided for communicating with the image processing apparatus **100**. The connector **216** is connectable to the connector **96** of the image processing apparatus **100**.

[**0075**] The lens unit **300** is an interchangeable lens unit. The lens mount **306** mechanically couples the lens unit **300** with the image processing apparatus **100**. The lens mount **306** contains various functions of electrically connecting the lens unit **300** to the image processing apparatus **100**.

[**0076**] The lens unit **300** further includes an interface **320** and a connector **322**. The interface **320** is configured to connect the lens unit **300** to the image processing apparatus **100** inside the lens mount **306**. The connector **322** electrically connects the lens unit **300** to the image processing apparatus **100**.

[**0077**] The connector **322** allows a control signal, a status signal, a data signal, etc., to be transferred between the image processing apparatus **100** and the lens unit **300**, and has the function of receiving various electric currents or supplying electric currents. The connector **322** may be configured to perform optical communication, voice communication or the like in addition to electrical communication.

[**0078**] The diaphragm control portion **340** controls the diaphragm **312** in cooperation with the shutter control portion **40**, which controls the shutter **12**, on the basis of metered light information from the light metering portion **46**. The distance metering control portion **342** controls focusing of the photographing lens **310**. The lens unit **300** further includes a zoom control portion **344**. The zoom control portion **344** controls zooming of the photographing lens **310**.

[**0079**] The lens unit **300** further includes a lens control circuit **350**. The lens control circuit **350** controls the lens unit **300**. The lens control circuit **350** also has the function of a memory storing constants, variables, programs, etc., for operations, and the function of a nonvolatile memory storing identification information such as a number unique to the lens unit **300**, management information, function information such as a fully-open aperture value, minimum aperture value and focal length, present or past setting values, etc.

[**0080**] Operation of the electronic camera configured as described above is described below. FIGS. **2** to **4** are a flow chart illustrating the photographing operation procedure of the image processing apparatus **100** according to the present embodiment. A program for implementing this operation procedure is stored in a storage medium, such as the nonvolatile memory **52**. During operation, the program is loaded in the memory **52** and is then executed by a CPU (not shown) incorporated in the system control circuit **50**.

[**0081**] Referring to **FIG. 2**, when the photographing operation procedure is started, the system control circuit **50** performs initialization at step S**101**. In the present embodiment, when the power supply is turned on in response to the replacement of batteries or the like, the system control circuit **50** initializes flags, control variables, etc., and performs necessary predetermined settings for the individual portions of the image processing apparatus **100**.

[**0082**] At step S**102**, the system control circuit **50** checks the set position of the power switch **72** to determine whether the power switch **72** is set to power OFF or to power ON. If the power switch **72** is set to power OFF, the system control circuit **50** performs predetermined end processing, for example, to end displaying of each indicator portion, record necessary parameters including flags and control variables, set values and set modes in the nonvolatile memory **56**, and cause the power control portion **80** to shut down unnecessary supplying of power to the individual portions of the image processing apparatus **100** including the image display portion **28** (step S**103**). After that, the system control circuit **50** returns to step S**102**.

[**0083**] If it is determined at step S**102** that the power switch **72** is set to power ON, the system control circuit **50** causes the power control portion **80** to check whether the remaining amount of power or the operating status of the power source portion **86**, such as a battery, is suitable for the operation of the image processing apparatus **100** (step S**104**). If there is a problem, the system control circuit **50** causes the indicator portion **54** to give a predetermined warning by displaying an image or outputting sound (step S**105**). After that, the system control circuit **50** returns to step S**102**.

[**0084**] If it is determined at step S**104** that there is no problem with the power source portion **86**, the system control circuit **50** checks the set position of the mode dial switch **60** to determine whether the mode dial switch **60** is set to a photography mode (step S**106**).

[**0085**] If it is determined at step S**106** that the mode dial switch **60** is set to a mode other than the photography mode,

the system control circuit **50** executes processing corresponding to the selected mode (step S**107**). After that, the system control circuit **50** returns to step S**102**.

[**0086**] If it is determined at step S**106** that the mode dial switch **60** is set to the photography mode, the system control circuit **50** checks whether the recording medium **200** or **210** is already attached to the image processing apparatus **100** and whether the acquisition of management information of image data recorded on the recording medium **200** or **210** and the operating status of the recording medium **200** or **210** are suitable for the operation of the image processing apparatus **100**, particularly, for the recording and reproduction of image data on and from the recording medium **200** or **210** (step S**108**). If it is determined at step S**108** that there is a problem with the recording medium **200** or **210**, the system control circuit **50** causes the indicator portion **54** to give a predetermined warning by displaying an image or outputting sound (step S**105**). After that, the system control circuit **50** returns to step S**102**.

[**0087**] If it is determined at step S**108** that there is no problem with the recording medium **200** or **210**, the system control circuit **50** proceeds to step S**112**. At step S**112**, the system control circuit **50** causes the indicator portion **54** to indicate the various setting states of the image processing apparatus **100** using an image or sound. If an image display switch (not shown) provided on the image display portion **28** is in an ON state, the image display portion **28** may also display the various setting states of the image processing apparatus **100** using an image or sound.

[**0088**] Then, the system control circuit **50** proceeds to step S**113** (shown in **FIG. 3**). At step S**113**, the system control circuit **50** checks whether the first shutter switch **62** (SW**1**) is pressed. If the first shutter switch **62** (SW**1**) is not pressed, the system control circuit **50** returns to step S**102**. If the first shutter switch **62** (SW**1**) is pressed, the system control circuit **50** performs distance metering and light metering processing to focus the photographing lens **310** on an object and determine an aperture value and a shutter speed (step S**114**). In the light metering processing, the electronic flash portion **48** is set if necessary. The details of the distance metering and light metering processing (step S**114**) are described later.

[**0089**] At step S**118**, the system control circuit **50** checks whether the shutter speed is less than 1 sec. If the shutter speed is less than 1 sec, the system control circuit **50** proceeds to step S**123**. If the shutter speed is 1 sec or more, the system control circuit **50** proceeds to step S**120** without performing rasterizing of horizontal dark shading correction data, which is described below. At step S**120**, the system control circuit **50** sets a long-exposure flag and then proceeds to step S**124**.

[**0090**] At step S**123**, the system control circuit **50** reads out one-dimensional correction data used for horizontal dark shading correction from the nonvolatile memory **56**, and repeatedly rasterizes the one-dimensional correction data onto a predetermined area of the memory **30** in the vertical direction by the number of lines equal to that of an actual image. **FIG. 5** is a diagram illustrating an example of correcting an original image using horizontal dark shading correction data. In the present step S**123**, since short-exposure photography is set, only information about an integral part of the correction data is used. After completion of rasterising of the correction data, the system control circuit **50** proceeds to step S**124**.

[**0091**] At step S**124**, the system control circuit **50** checks whether the second shutter switch **64** (SW**2**) is pressed. If the second shutter switch **64** (SW**2**) is not pressed, the system control circuit **50** checks whether the first shutter switch **62** (SW**1**) is released (step S**125**). The system control circuit **50** repeats the processes in steps S**124** and S**125** until the first shutter switch **62** (SW**1**) is released or the second shutter switch **64** (SW**2**) is pressed. If it is determined at step S**125** that the first shutter switch **62** (SW**1**) is released, the system control circuit **50** proceeds to step S**102**.

[**0092**] If it is determined at step S**124** that the second shutter switch **64** (SW**2**) is pressed, the system control circuit **50** proceeds to step S**126** (shown in **FIG. 4**). At step S**126**, the system control circuit **50** checks whether any storage area available for storing captured image data is present in an image storage buffer area of the memory **30**. If there is no storage area available for storing new captured image data in the image storage buffer area of the memory **30**, the system control circuit **50** causes the indicator portion **54** to give a predetermined warning by displaying an image or outputting sound (step S**127**). After that, the system control circuit **50** returns to step S**102**.

[**0093**] For example, in cases where, immediately after a continuous shooting operation for a maximum number of frames storable in the image storage buffer area of the memory **30** has been performed, the first frame image to be read out from the memory **30** and written into the recording medium **200** or **210** is not yet recorded on the recording medium **200** or **210** and any empty area for even one frame image cannot be secured in the image storage buffer area of the memory **30**, the system control circuit **50** determines that there is no storage area available for storing new captured image data in the image storage buffer area of the memory **30**.

[**0094**] When captured image data is to be stored in the image storage buffer area of the memory **30** after being compressed, the amount of compressed image data varies depending on the setting of a compression mode. Taking this into consideration, at step S**126**, the system control circuit **50** checks whether any storage area available for storing captured image data is present in the image storage buffer area of the memory **30**.

[**0095**] In addition, if the long-exposure flag is set at step S**120**, the system control circuit **50** obtains the number of times of readout calculated from the set shutter speed and also checks whether any storage area available for storing image data corresponding to such a plurality of times of readout is present in the image storage buffer area of the memory **30**.

[**0096**] If it is determined at step S**126** that a storage area available for storing captured image data is present in the image storage buffer area of the memory **30**, the system control circuit **50** proceeds to step S**128**. At step S**128**, the system control circuit **50** performs a photography process to read out an image signal captured and stored for a predetermined period from the image sensor **14** and to write the captured image data into a predetermined area of the memory **30** via the A/D converter **16**, the image processing circuit **20** and the memory control circuit **22** or via the A/D converter **16** and the memory control circuit **22**.

[0097] The details of step S128 shown in **FIG. 4** are described next with reference to **FIGS. 6 and 7**. In the photography process procedure, various signals are transferred between the system control circuit **50** and the diaphragm control portion **340** or the distance metering control portion **342** via the interface **120**, the connectors **122** and **322**, the interface **320** and the lens control circuit **350**.

[0098] The system control circuit **50** causes a mirror driving portion (not shown) to move the mirror **130** to a mirror-up position (step S301 of **FIG. 6**). Then, the system control circuit **50** causes the diaphragm control portion **340** to drive the diaphragm **312** up to a predetermined aperture value in accordance with metered light data stored in an internal memory of the system control circuit **50** or in the memory **52** (step S302).

[0099] Subsequently, after clearing electric charge in the image sensor **14** (step S303), the system control circuit **50** starts electric charge storage in the image sensor **14** (step S304), causes the shutter control portion **40** to open the shutter **12** (step S305), and starts exposing the image sensor **14** (step S306).

[0100] After starting exposure, the system control circuit **50** checks whether the long-exposure flag is set (step S307). If the long-exposure flag is not set, the system control circuit **50** waits for completion of exposure (step S310 of **FIG. 7**).

[0101] If the long-exposure flag is set at step S307, the system control circuit **50** sets a timer that operates, for example, at intervals of 1 sec after starting exposing the image sensor **14** (step S308). Then, the system control circuit **50** sends a readout instruction to the image sensor **14** at intervals of 1 sec and reads out a captured image signal stored during every readout period from the image sensor **14** (step S309).

[0102] The image sensor **14** continues storing electric charge and outputs an image signal corresponding to electric charge stored during every readout period. The system control circuit **50** writes captured image data into a predetermined area of the memory **30** via the A/D converter **16**, the image processing circuit **20** and the memory control circuit **22** or via the A/D converter **16** and the memory control circuit **22**. This operation is repeated until a predetermined charge storage time has elapsed at step S310.

[0103] More specifically, if exposure for 2 sec is performed, readout is performed two times to obtain image data for two frames. The obtained image data for two frames are added together to form final image data. If exposure for 8 sec is performed, readout is performed eight times to obtain image data for eight frames. The obtained image data for eight frames are added together to form final image data.

[0104] **FIGS. 9A** to 9E illustrate the manner of the above-described addition. **FIG. 9A** shows the opening and closing of the shutter **12**. As shown in **FIG. 9B**, a readout signal is output at intervals of 1 sec. Accordingly, as shown in **FIG. 9C**, the image sensor **14** starts storing electric charge at the same time that the shutter **12** is opened. After that, as shown in **FIG. 9D**, a readout instruction is given to the image sensor **14** at intervals of 1 sec. In this regard, however, an instruction for ending charge storage is not given, and readout continues while storing electric charge. Then, as shown in **FIG. 9E**, image data read out at intervals of 1 sec are sequentially written into the memory **30**.

[0105] Here, for sake of simplicity, read-out image data are rasterized into the memory **30** in sequence. As the shutter **12** has been closed after readout has been performed three times during the open state of the shutter **12**, readout is newly performed. Thus, readout is performed four times in total, and image data for four frames are stored in the memory **30**. After that, the image data for four frames are integrated or accumulated to obtain image data for one frame. In the example shown in **FIGS. 9A** to 9E, for sake of simplicity, the image data for one frame obtained by integration is written into a memory area that is different from memory areas in which the image data for four frames are stored.

[0106] After the above-described photography sequence has been completed, correction data is calculated, and the calculated correction data is rasterized into the memory **30**. In the last instance, the calculated correction data is subtracted from the image data obtained by integration, so that corrected image data is finally obtained.

[0107] Here, in the above-described example, for sake of simplicity, image data are stored and processed using memory areas in sequence. However, in cases where all of images read out a plurality of times at the time of long exposure are recorded to one memory, an enormous amount of capacity of the memory is used. Therefore, the consumed amount of capacity of the memory may be generally optimized, for example, by using a method in which image data for two frames are added together and the added image data is recorded to a memory area where the original image data for one frame has been recorded.

[0108] Referring back to **FIG. 7**, the system control circuit **50** waits for completion of exposure of the image sensor **14** based on metered light data (step S310). After completion of exposure, the system control circuit **50** causes the shutter control portion **40** to close the shutter **12** (step S311), thus ending exposure of the image sensor **14**.

[0109] The system control circuit **50** causes the diaphragm control portion **340** to drive the diaphragm **312** up to a fully-open aperture value (step S312), and causes the mirror driving portion (not shown) to move the mirror **130** down (step S313).

[0110] Then, the system control circuit **50** checks whether the set charge storage time has elapsed (step S314). If the set charge storage time has elapsed, the system control circuit **50** ends charge storage of the image sensor **14** (step S315).

[0111] After that, the system control circuit **50** reads out an electric charge signal from the image sensor **14**, and writes captured image data into a predetermined area of the memory **30** via the A/D converter **16**, the image processing circuit **20** and the memory control circuit **22** or via the A/D converter **16** and the memory control circuit **22** (step S316).

[0112] Even where the long-exposure flag has been set, a readout process is performed once again at step S316. Accordingly, even if the storage time is not an integral multiple of a repetitive readout cycle, a remainder component can be adjusted by the readout process performed at step S316. For example, if the shutter speed is set to 3.2 sec, readout is repeated three times at intervals of 1 sec and, then, exposure for 0.2 sec is finally performed, so that image data for four frames are obtained. The image data for four frames are added together to obtain a final image.

[0113] After the captured image signal has been read out at step S316, the system control circuit **50** checks again whether the long-exposure flag is set (step S317). If the long-exposure flag is not set, i.e., if short-exposure photography is set, the system control circuit **50** immediately ends the photographing operation. If the long-exposure flag is set, the system control circuit **50** calculates correction data for long-exposure photography using the number of times that readout has been performed in the actual photographing operation (step S318).

[0114] Calculation of correction data at step S318 is now described in detail below. Supposing the shutter speed is set to 2 sec, a value obtained by subtracting a dark offset amount from correction data created during adjustment in the manufacturing process is multiplied by 2. To the value obtained by this multiplication, the dark offset amount is added. An integral part of the value obtained by this addition is set as new correction data.

[0115] In the present embodiment, correction data contains information indicating parts after the decimal point (here, a 1/16 LSB value, for example). That is, a quantization precision is higher than when readout is performed once for one exposure operation as in short-exposure photography. Therefore, even if the correction data is multiplied by 2, the correction data has a resolution of 1 LSB value not a resolution of the sum of 2 LSB values.

[0116] Furthermore, supposing the shutter speed is set to 8 sec, a value obtained by subtracting a dark offset amount from correction data created during adjustment in the manufacturing process is multiplied by 8. To the value obtained by this multiplication, the dark offset amount is added. An integral part of the value obtained by this addition is set as new correction data. In this case, the correction data also contains information indicating parts after the decimal point. Therefore, even if the correction data is multiplied by 8, the correction data has a resolution of 1 LSB value not a resolution of the sum of 8 LSB values.

[0117] As described above, correction data having a resolution of 1 LSB value can be calculated up to a region of long-exposure photography in which readout is performed a number of times (here, 32 times) exceeding a resolution of the correction data.

[0118] If the long-exposure flag is set, image data finally processed by an addition operation after completion of exposure is obtained, and correction data as multiplied by the number of times of addition during exposure is calculated.

[0119] At step S319, the system control circuit **50** rasterizes new correction data obtained as described above into the memory **30**. Since a subtraction process is performed during a development process (to be described later) as in short-exposure photography, horizontal dark shading correction can be performed with a high degree of accuracy. After completing a series of photography operations, the system control circuit **50** ends this processing and returns to the main processing. That is, the system control circuit **50** proceeds to step S132 shown in **FIG. 4**.

[0120] In step S132, the system control circuit **50** reads out a part of image data written in a predetermined area of the memory **30** via the memory control circuit **22**. Then, the system control circuit **50** performs a WB (white balance) integration operation process and an OB (optical black) integration operation process that are required to perform a development process. The system control circuit **50** stores results of the operations in an internal memory thereof or the memory **52**.

[0121] The system control circuit **50** reads out captured image data written in the predetermined area of the memory **30** using the memory control circuit **22** and, if necessary, the image processing circuit **20**. Then, the system control circuit **50** performs various development processes including an AWB (auto white balance) process, a gamma conversion process and a color conversion process using the operation results stored in the internal memory thereof or the memory **52** (step S132).

[0122] In the development process performed at step S132, the system control circuit **50** can also perform a dark correction operation for canceling dark current noise of the image sensor **14** and the like by performing subtraction using horizontal dark shading correction data rasterized at step S123 or S319.

[0123] When the correction operation is performed using the horizontal dark shading correction data as described above, image quality deterioration caused by horizontal dark current noise or fixed-pattern noise generated in the image sensor **14** can be corrected without performing any dark loading for a captured image.

[0124] The system control circuit **50** reads out image data written in the predetermined area of the memory **30**, causes the compression/expansion circuit **32** to perform image compression according to the set compression mode, and writes the captured image data subjected to a series of processing operations into an empty image portion of the image storage buffer area of the memory **30** (step S133).

[0125] The system control circuit **50** then starts a recording process to read out image data stored in the image storage buffer area of the memory **30** and write the read-out image data into the recording medium **200** or **210**, such as a memory card or Compactflash® card, via the interface **90** or **94** and the connector **92** or **96** (step S134). This recording process is performed for captured image data subjected to a series of processing operations each time the image data is newly written into an empty image portion of the image storage buffer area of the memory **30**.

[0126] While image data is being written into the recording medium **200** or **210**, the system control circuit **50** causes the indicator portion **54** to provide a recording medium writing indication, such as blinking of the LED, so as to indicate that writing is in progress.

[0127] Then, the system control circuit **50** returns to step S124, where the system control circuit **50** waits for the next photography. In this way, a series of processing operations associated with photography is completed.

[0128] In the electronic camera according to the present embodiment configured to perform processing as described above, when dark noise correction is performed at the time of short-exposure photography using horizontal dark shading correction data created and stored during adjustment in the manufacturing process, a shutter release time lag can be reduced, thus enabling high-quality image data to be obtained.

[0129] Furthermore, when long-exposure photography, in which a large dark current component is generated, is performed, readout is performed a plurality of times during an exposure operation so as to secure the sufficient dynamic range, and horizontal dark shading correction is appropriately performed using more accurately calculated correction data. Accordingly, an image satisfying both of high dynamic range and high image quality can be obtained.

[0130] Although a specific embodiment of the present invention has been described above, the present invention is not limited to the configuration of the embodiment, and is applicable to any configuration capable of achieving the functions presented in claims or the functions of the configuration of the embodiment.

[0131] For example, in the above-described embodiment, correction data is rasterized in the memory **30** when horizontal dark shading correction is performed. However, correction may also be performed without rasterization such that correction data is sequentially subtracted for every line from an original image while image data is loaded from the image sensor **14**. In addition, correction may also be performed such that an image stored in the memory is once read out and then written into the memory again while correction data is subtracted from the image.

[0132] Also, in the above-described embodiment, rasterization (step S**123**) of horizontal dark shading correction data is performed after the first shutter switch **62** (SW1) is pressed. However, correction data may also be rasterized when the power supply of the camera is turned on.

[0133] In the above-described embodiment, calculation of correction data used for correction at the time of long-exposure photography is performed after completion of an exposure operation. However, if an exposure time is known in advance, calculation of correction data may also be performed before completion of an exposure operation or before start of an exposure operation.

[0134] Furthermore, although correction data is horizontal one-dimensional data in the above-described embodiment, correction data may also be vertical one-dimensional data or two-dimensional data calculated from images captured a plurality of times. For example, during the manufacturing process, a plurality of dark images are captured and correction data is calculated using the plurality of images. Accordingly, two-dimensional correction data having a precision of a decimal fraction part can be calculated.

[0135] Also, correction data need not be data of the whole of two-dimensional images. One-dimensional data in both the horizontal and vertical directions may be stored. When horizontal one-dimensional data is rasterized in the rasterization process (step S**123**) for correction data, dark shading in both the horizontal and vertical directions can be corrected by adjusting the amount of correction line by line using vertical one-dimensional data. **FIG. 8** is a diagram illustrating correction of an original image using one-dimensional data in both the vertical and horizontal directions.

[0136] In the above-described embodiment, correction data is created and stored in the nonvolatile memory **56** during adjustment in the manufacturing process. However, correction data may also be created and stored by a user at any arbitrary timing performing a projection operation on at least one image obtained by dark photography.

[0137] Furthermore, in the above-described embodiment, a readout operation to be performed a plurality of times is selected depending on the time length of the shutter speed. However, the readout operation to be performed a plurality of times may also be selected depending on various conditions, such as ambient temperature or ISO sensitivity set for photography, in addition to the time length of the shutter speed.

[0138] The present invention can also be achieved by providing a system or apparatus with program code of software for implementing the functions of the above-described embodiment. In this case, the program code itself implements the functions of the embodiment.

[0139] In the above-described embodiment, program code shown in the flow charts of FIGS. **2** to **4**, **6** and **7** is stored in a ROM (read-only memory). A recording medium for supplying the program code is not limited to a ROM but includes a flexible disk, a hard disk, a non-volatile memory card, etc.

[0140] Program code of software for implementing the functions of the above-described embodiment may be supplied to a computer (CPU or MPU (micro-processing unit)) of an apparatus or system connected to various devices so as to operate the various devices to implement the functions of the embodiment, and causing the various devices to operate in accordance with the program code stored in the computer of the system or apparatus.

[0141] In this case, the program code of software itself implements the functions of the above-described embodiment. The recording medium storing the program code includes, for example, a flexible disk, a hard disk, an optical disk, a magneto-optical disk, a CD-ROM (compact disk-ROM), a magnetic tape, a non-volatile memory card, a ROM, etc.

[0142] Furthermore, besides the program code supplied to the computer being executed to implement the functions of the above-described embodiment, the present invention includes the program code being executed in association with an OS (operating system), another application program or the like running on the computer to implement the functions of the above-described embodiment.

[0143] Moreover, the present invention can also include a CPU or the like contained in a function expansion board inserted into the computer or in a function expansion unit connected to the computer, the function expansion board or the function expansion unit having a memory in which the supplied program code is stored, the CPU or the like performing an actual process in whole or in part according to instructions of the program code to realize the functions of the above-described embodiment.

[0144] As many apparently widely different embodiments of the present invention can be made without departing from the spirit and scope thereof, it is to be understood that the invention is not limited to the specific embodiments thereof except as defined in the appended claims.

[0145] This application claims priority from Japanese Patent Application No. 2004-124407 filed Apr. 20, 2004, which is hereby incorporated by reference herein.

What is claimed is:

1. An image capture apparatus comprising:

a quantization precision selection device configured to select a first quantization precision in a case where an operation for reading out image data from an image sensor is performed a plurality of times for one image capturing operation and to select a second quantization precision that is lower than the first quantization precision in a case where an operation for reading out the image data from the image sensor is performed once for one image capturing operation; and

an image data correction device configured to perform correction processing of the image data using correction data having one of the first and second quantization precisions selected by the quantization precision selection device.

2. An image capture apparatus according to claim 1, further comprising a changeover device configured to change an operation for reading out the image data from the image sensor according to a photographing condition.

3. An image capture apparatus according to claim 1, further comprising a changeover device configured to change an operation for reading out the image data from the image sensor according to a photographing environment.

4. An image capture apparatus according to claim 1, wherein, in a case where an operation for reading out the image data from the image sensor is performed a plurality of times for one image capturing operation, the image data correction device integrates image data that have been read out over a plurality of times, calculates correction data having the first quantization precision, and corrects the integrated image data using the correction data that was calculated.

5. An image capture method comprising:

a quantization precision selection step of selecting a first quantization precision in a case where an operation for reading out image data from an image sensor is performed a plurality of times for one image capturing operation and selecting a second quantization precision that is lower than the first quantization precision in a case where an operation for reading out the image data from the image sensor is performed once for one image capturing operation; and

an image data correction step of performing correction processing of the image data using correction data having one of the first and second quantization precisions selected by the quantization precision selection step.

6. An image capture method according to claim 5, further comprising a changeover step of changing an operation for reading out the image data from the image sensor according to a photographing condition.

7. An image capture method according to claim 5, further comprising a changeover step of changing an operation for reading out the image data from the image sensor according to a photographing environment.

8. An image capture method according to claim 5, wherein, in a case where an operation for reading out the image data from the image sensor is performed a plurality of times for one image capturing operation, the image data correction step integrates image data that have been read out over a plurality of times, calculates correction data having the first quantization precision, and corrects the integrated image data using the correction data that was calculated.

9. A computer program for causing a computer to perform an image capture method according to claim 5.

10. A computer-readable recording medium having recorded thereon a computer program for causing a computer to perform an image capture method according to claim 5.

* * * * *