UNITED STATES PATENT AND TRADEMARK OFFICE

BEFORE THE PATENT TRIAL AND APPEAL BOARD

WEBGROUP CZECH REPUBLIC, A.S.,

Petitioner,

v.

DISH TECHNOLOGIES L.L.C.,

Patent Owner.

Case No. IPR2025-00470

U.S. PATENT NO. 11,677,798

PATENT OWNER'S PRELIMINARY RESPONSE BRIEF ON DISCRETIONARY DENIAL ISSUES UNDER 35 U.S.C. § 313 AND 37 C.F.R. § 42.107

TABLE OF CONTENTS

Page

I. Introduction 1

II. Background 5

A. Validity Challenges at ITC 5

B. First Wave of Post-Grant Challenges 6

C. Second and Third Waves of Post-Grant Challenges 9

D. Fourth Wave of Post-Grant Challenges 13

E. Fifth Wave of Post-Grant Challenges 14

III. The Board Should exercise Its Discretion to Deny Institution Under 35 U.S.C. § 314(a) 16

A. Workload Management Factors Favor Denial 17

1. Factor 1: Prior adjudication 17
2. Factor 2: Changes in law 17
3. Factor 3: Strength of the challenge 18
4. Factor 4: Reliance on expert testimony 23
5. Factor 5: Settled expectations of the parties 24
6. Factor 6: Compelling economic and public health interests 25

B. *General Plastic* Factors Favor Denial 25

1. Factor 1: The numerous prior petitions, and Petitioner's use of them to draft this Petition, weigh against institution 26
2. Factor 2: Petitioner was aware of its primary reference (Leaning US 2008), one of its secondary references (SMIL 2.0), and the Aylo Leaning IPR for over 11-months prior to filing 36
3. Factor 3: Petitioner had access to and impermissibly used relevant filings in prior IPRs on the '798 Patent and related patents as a "roadmap" for this Petition 39
4. Factors 4 and 5: Petitioner provides no explanation for the nearly year-long delay in filing this Petition 40

5. Factors 6 and 7: Institution of this Petition would result in a significant waste of the Board's resources, and prejudice to DISH 43

IV. The Board Should Exercise Its Discretion to Deny Institution Under 35 U.S.C. § 325(d) 45

A. The Examiner Considered the Same or Substantially the Same Art During Prosecution (Becton, Dickinson Factors (a), (b), and (d)).....46

B. Petitioner Does Not Show that the Office Materially Erred in Evaluating the Prior Art.....50

V. Conclusion 51

Appendix 1 – Analysis Copied from Aylo's Leaning Petition.....53

Appendix 2 – Mapping of Substantially Identical Disclosures Across IPRs and Leaning References 57

Appendix 3 – Comparison of Leaning Disclosures Relied Upon Across IPRs.....58

PATENT OWNER'S EXHIBIT LIST

Ex. No.	Description of Documents
2001	U.S. Patent App. Pub. No. 2004/0030547 by Leaning et al. ("Leaning US App 2004")
2002	Redline Comparison of Leaning US 2008 and Leaning US App 2004
2003	International P.C.T. Publication WO 200249343 to Leaning et al. ("Leaning PCT 2002")
2004	337-TA-1265 ITC Investigation Commission Opinion ("Comm'n Op.")
2005	337-TA-1265 ITC Investigation Final Determination and Limited Exclusion Order (EDIS Doc No. 1961623)
2006	Email Refusal to Waive Service
2007	"Peloton Will Pay Dish $75M To Avoid Import Ban" – Dani Kass, Law360 (May 5, 2023)

I. INTRODUCTION[1]

DISH invented groundbreaking adaptive bitrate streaming ("ABR") technology[2] that transformed video streaming and remains critical to its "Sling TV" and "DISH Anywhere" streaming platforms. Since then, infringers like WebGroup Czech Republic A.S. and NKL Associates, S.R.O. (collectively "Petitioner" or "WGCZ") have been providing online adult-content videos that unlawfully exploit DISH's patented ABR technology, prompting DISH to defend its rights vigorously over the past six years in the International Trade Commission ("ITC") and in district courts throughout the country. This Petition is the latest in a long line of serial challenges filed against DISH's family of ABR Patents. The '798 Patent challenged here has already received rigorous scrutiny and been adjudicated through a trial before the Board.[3] Petitioner now seeks to rehash the validity of the '798 Patent

[1] Patent Owner DISH Technologies L.L.C. ("DISH") submits this preliminary response on discretionary denial pursuant to the Interim Processes for PTAB Workload Management set forth in the Director's Memorandum of March 26, 2025 ("Workload Management Memo" or "Memo").

[2] DISH parent Echostar Corp. acquired Move Networks Inc., the original applicant of the ABR patents at issue here, in 2010.

[3] *See* IPR2024-00043 (Paper 62) (FWD) (P.T.A.B. Apr. 29, 2025); IPR2024-00901 (Paper 11) (FWD) (P.T.A.B. Apr. 29, 2025).

through a fourth[4] post-grant review based on references that are cumulative of those already presented. This proceeding is emblematic of the type of abusive and inefficient litigation behavior that the Board's discretionary denial framework—reflected in the Workload Management Memo and the *General Plastic* and *Advanced Bionics* precedents—was designed to prevent.

The Workload Management factors all weigh heavily against institution: (1) 22 of the 25 claims challenged here have already been adjudicated in a full trial before the Board; (2) there has been no change in governing law since that adjudication; (3) the Petition lacks merit and fails to establish a valid prior art basis for its primary reference; (4) it relies on conclusory and unsupported expert testimony; (5) it undermines settled expectations surrounding multiple prior patent licenses; and (6) it serves no compelling public interest. In addition, the ITC issued extensive findings regarding similar claims of a related patent, recognizing objective indicia of commercial success, industry praise, and technical superiority of the patented technology,[5] which Petitioner does not meaningfully address. This "further weighs in favor of denying institution." *See Stryker Corp. v. KFX Med., LLC*,

---

[4] *See* IPR Nos. IPR2024-00043 (the "Aylo Ogdon IPR"), IPR2024-000517 (the "Aylo Leaning IPR"), and IPR2024-00901 (the "Fubo Ogdon IPR").

[5] *See Certain Fitness Devices, Streaming Components Thereof, and Systems Containing Same*, 337-TA-1265, Initial Determination at 215-17 (Sept. 9, 2022) (EX1009).

IPR2019-00817, Paper 10 at 28-29 (P.T.A.B. Sept. 16, 2019). Even more egregious, the Petition exemplifies the "roadmapping" and "gamesmanship" condemned by the Board—refusing to waive foreign service formalities (*see* EX2006) to access and leverage earlier petitions and associated litigation history, including Patent Owner's responses and the Board's decisions, to engineer a retooled challenge. WGCZ ultimately filed the Petition on the last day of its extended statutory deadline.

The *General Plastic* factors reinforce that discretionary denial is appropriate. WGCZ's Petition is not the first or even second IPR petition on the '798 Patent; it is the fourth petition against the '798 Patent and the thirty-fifth post-grant challenge across DISH's ABR Patent family. In addition, Petitioner's prior art and arguments here replicate[6] and incrementally modify those previously adjudicated. Petitioner had access to prior IPR petitions, as well as DISH's briefing, expert declarations, oral arguments, and Board decisions in those proceedings—yet waited 17 months after it was sued to file this recycled Petition, offering no explanation for its delay.

[6] This Petition relies on a primary reference ("Leaning US 2008," EX1004) that is substantially identical to the primary reference ("Leaning PCT 2002," EX2003) raised in a previous petition (IPR2024-00517), and the Petition asserts a secondary reference (SMIL 2.0, EX1006) raised in all three prior petitions (IPR2024-00043, IPR2024-00901, and IPR2024-00517). Petitioner's analysis of these references is either copied (*see infra* Appendix 1Appendix 1 – Analysis Copied from Aylo's Leaning Petition) or minimally revised (*see infra* III.B.1).

This gamesmanship, conducted on the eve of the patent's expiration, has already stripped DISH of its ability to pursue injunctive relief and risks delaying its pursuit of damages for years. It is precisely this sort of strategic abuse and burdening of the Board that *General Plastic* was intended to deter.

Finally, institution should also be denied under 35 U.S.C. § 325(d) because Leaning US 2008 is cumulative of U.S. Application Publication No. 2004/0030547 ("Leaning US App 2004," EX2001), which was cited and considered during the original prosecution. Petitioner fails to show how the Office materially erred in its earlier consideration of these disclosures. Petitioner concedes that Leaning US App 2004, which is substantially identical to Leaning US 2008, was cited on the face of the '798 Patent, but argues without basis that Leaning US App 2004 was not meaningfully considered. Pet., 8. That argument contradicts Board precedent, which presumes that Examiners have reviewed all listed references and does not require a rejection to be based on a reference for it to qualify as having been considered. Petitioner's failure to identify any material error in the Office's prior evaluations, coupled with its reliance on substantially the same art, compels denial under the two-part *Advanced Bionics* framework.

The Petition is redundant, untimely, and unsupported. It burdens the Office, threatens DISH's rights as a long-standing patent holder, and promotes litigation gamesmanship that undermines the integrity of the patent and *inter partes* review

systems. The Board should exercise its discretion and deny institution.

II. BACKGROUND

The validity of DISH's ABR Patents have been adjudicated in numerous venues over the past five years, including through trial at the ITC and through dozens of challenges mounted by various petitioners before the Board. In the ITC matter, the accused infringers were Peloton Interactive, Inc.; lululemon athletica inc.; ICON Health & Fitness, Inc.; FreeMotion Fitness, Inc.; NordicTrack, Inc.; and Curiouser Products Inc. d/b/a MIRROR (collectively, the "ITC Respondents").

A. Validity Challenges at ITC

The ITC Respondents asserted invalidity of claims based on six different references, the ITC ultimately upheld the validity of all challenged claims because the asserted references failed to disclose or render obvious the challenged claims. *See* EX1009 at 169-230.

In doing so, the ITC also made extensive findings on secondary considerations, with the Chief ALJ finding that DISH's objective indicia evidence had "demonstrated long-felt but unresolved need and failure of others," and that DISH had "adduced evidence demonstrating surprising results," "commercial success," and "praise by others." EX1009 at 213-17; *see also* EX2004 (Comm'n Op.) at 2 (adopting same).

The ITC issued an exclusion order in March 2023 stemming from ITC Respondents' infringement of the asserted DISH ABR Patents. EDIS Doc No.

1961623 (Final Determination and Limited Exclusion Order) (Mar. 8, 2023) (EX2005). This resulted in over $75,000,000 in licensing revenue to DISH. EX2007 (Kass, Dani (May 5, 2023), *Peloton Will Pay DISH 75m to Avoid Import Ban*, Law360, https://www.law360.co.uk/articles/1604881/peloton-will-pay-dish-75m-to-avoid-import-ban (last accessed, Apr. 18, 2025)).

B. First Wave of Post-Grant Challenges

On July 25, 2023, Aylo Freesites Ltd ("Aylo") filed a declaratory judgment action against DISH in federal district court in the Northern District of California. Aylo is another foreign adult-content streaming company. Aylo's action initially alleged non-infringement of three of DISH's ABR patents (U.S. Patent Nos. 10,469,555, 10,757,156, and 11,470,138), and was later amended to add five more of DISH's ABR patents (U.S. Patent Nos. 11,677,798; 10,951,680; 10,469,554; 9,407,564; and 8,868,772). *MG Freesites Ltd v. DISH Techs. L.L.C.*, No. 3:23-cv-03674, Dkt. 1 (N.D. Cal. July 25, 2023);[7] *see also id.*, Dkt. 29 (Sept. 6, 2023). DISH moved to dismiss Aylo's action and filed a patent infringement suit against Aylo in federal court in Utah on January 24, 2024. *DISH Techs. L.L.C. v. Aylo Freesites Ltd f/k/a MG Freesites Ltd*, No. 2:24-cv-00066 (D. Utah Jan. 24, 2024).

DISH also filed suit in Utah against Petitioner WGCZ—a Czech-based adult-content streaming company—on August 22, 2023. *DISH Techs. L.L.C. v. WebGroup*

[7] MG Freesites Ltd was later rebranded as Aylo Freesites Ltd.

Czech Republic A.S., No. 2:23-cv-00553 (D. Utah Aug. 22, 2023). Similar to its suit against Aylo, DISH alleges that WGCZ infringes six ABR Patents, including the '798 Patent challenged in the Petition here. *Id.*

The California court dismissed Aylo's initial case for lack of personal jurisdiction over DISH. *MG Freesites*, No. 3:23-cv-03674, Dkt. 67 at 21. And the Utah actions against both Aylo and Petitioner WGCZ remain pending, though partially stayed. *WebGroup Czech Republic*, No. 2:23-cv-00553, Dkt. 54 at 15-16.

Three months after Aylo filed its lawsuit against DISH and two months after DISH sued WGCZ for infringement, Aylo filed eight IPR petitions challenging the same DISH ABR Patents it named in the California lawsuit and elected not to have its primary reference be art considered during prosecution (including Leaning US App 2004). As shown below, each petition was based on a reference called "Ogdon." Each of these IPRs was filed before DISH ever filed suit against Aylo. The below table summarizes the claims and prior art at issue in the "Aylo Ogdon IPRs."

First Wave Challenges – Aylo's Ogdon-Based IPRs ("Aylo Ogdon IPRs")				
Case	**Challenged Claims**	**Filing Date**	**Prior Art Asserted**	**Status**
IPR2024-00043 ('798 Patent)	1-9, 11-19, 21-24	October 13, 2023	**Ogdon**, Allen, SMIL 2.0, Shteyn	FWD Issued
IPR2024-00044 ('138 Patent)	1, 3-12, 14-20, 22-25, 27-29	October 13, 2023	**Ogdon**, Allen, SMIL 2.0	FWD Issued
IPR2024-00045 ('554 Patent)	1-5, 7, 8, 10-14, 16-20, 22-28, 30	October 13, 2023	**Ogdon**, Allen, SMIL 2.0	FWD Issued
IPR2024-00046 ('680 Patent)	1, 2, 4-12, 14-19, 21-25, 27-29	October 13, 2023	**Ogdon**, Allen, SMIL 2.0	FWD Issued
IPR2024-00047 ('564 Patent)	1-8, 10, 12-16	October 13, 2023	**Ogdon**, Shteyn, Chou	Institution Denied
IPR2024-00048 ('772 Patent)	1, 3-8, 10-21	October 13, 2023	**Ogdon**, Shteyn, Chou	Institution Denied
IPR2024-00146 ('555 Patent)	1, 3-5, 7-11, 13-20, 22-27	November 7, 2023	**Ogdon**, Allen, SMIL 2.0	FWD Issued
IPR2024-00047 ('156 Patent)	1-17	November 7, 2023	**Ogdon**, Ala-Honkola, Shteyn, Chou, SMIL 2.0	Institution Denied

On April 16, 2024, the Board instituted IPR in five of the eight Aylo Ogdon IPRs, and denied the remaining petitions because "Ogdon does not suggest storing multiple copies of the same video encoded at different bitrates." *See, e.g.*, IPR2024-00048, Paper 8 at 19 (P.T.A.B. Apr. 16, 2024). From April 14 through April 17, 2025, the Board issued final written decisions for this first wave of post-grant challenges, confirming patentability of claims 2-8 and 22-24 of the '798 Patent, claims 6, 8-13, and 18-20 of the '138 Patent, claims 4, 7, 8, 10-14, and 23-25 of the

'554 Patent, claims 7-9, 22-25, and 27 of the '680 Patent, and claims 4, 7-9, 16, 17, and 22-25 of the '555 Patent. *See* IPR2024-00043, Paper 62 at 2-3; IPR2024-00044, Paper 63 at 3; IPR2024-00045, Paper 62 at 3; IPR2024-00046, Paper 63 at 3; IPR2024-00146, Paper 60 at 3.

C. Second and Third Waves of Post-Grant Challenges

Three months after the filing of the Aylo Ogdon IPRs, Aylo filed a second wave of eight IPR Petitions against claims of the very same patents. Aylo based that second wave on Leaning PCT 2002 (EX2003), which is the international application publication of Leaning US 2008 relied on here in this Petition. The below table summarizes the claims and prior art at issue in the "Aylo Leaning IPRs." This second wave of petitions again avoided relying on Leaning US App 2004, which was considered during prosecution. Critically as to both Aylo's and WGCZ's roadmapping, Leaning US App 2004 (EX2001) was cited during prosecution and listed on the face of DISH's ABR Patents—including the '798, '138, '554, '680, '564, '772, and '555 Patents. The primary reference on which WGCZ relies for the instant Petition contains substantially identical disclosures to Leaning US App 2004.

Second Wave Challenges – Aylo's Leaning-Based IPRs ("Aylo Leaning IPRs")				
Case	**Challenged Claims**	**Filing Date**	**Prior Art Asserted**	**Status**
IPR2024-00512 ('138 Patent)	1-12, 14-30	January 30, 2024	**Leaning PCT 2002**, Allen, SMIL 2.0	Institution Denied
IPR2024-00513 ('156 Patent)	1-18	January 30, 2024	**Leaning PCT 2002**, Ala-Honkola	Institution Denied
IPR2024-00514 ('554 Patent)	1-5, 7-14, 16-30	January 30, 2024	**Leaning PCT 2002**, Allen, SMIL 2.0	Institution Denied
IPR2024-00515 ('555 Patent)	1-5, 7-27	January 30, 2024	**Leaning PCT 2002**, Allen	Institution Denied
IPR2024-00516 ('680 Patent)	1-12, 14-29	January 30, 2024	**Leaning PCT 2002**, Allen, SMIL 2.0	Institution Denied
IPR2024-00517 ('798 Patent)	1-25	January 30, 2024	**Leaning PCT 2002**, Allen, SMIL 2.0, Dalby	Institution Denied
IPR2024-00518 ('564 Patent)	1-16	January 30, 2024	**Leaning PCT 2002**, Gamble	Institution Denied
IPR2024-00519 ('772 Patent)	1-21	January 30, 2024	**Leaning PCT 2002**, Gamble	Institution Denied

Given the potential for confusion caused by the various petitioners' use of substantially identical versions of the same underlying reference, DISH provides the following summary of Leaning references across challenges to the DISH ABR Patents.

"Leaning" References Across Post Grant Challenges to DISH's ABR Patents			
Short Name	**Pub/Pat Number**	**Pub/Issue Date**	**Summary**
"Leaning US App 2004"	US 2004/0030547	Feb. 12, 2004	Cited during prosecution of ABR Patents
"Leaning PCT 2002"	WO 02/49343	June 20, 2002	Primary reference across Aylo Leaning IPRs
"Leaning US 2008"	US 7,447,791	Nov. 4, 2008	Primary reference in this Petition

Around the time it sued Aylo and WGCZ, DISH also sued FuboTV Media Inc. ("Fubo") for allegedly infringing the same family of ABR Patents. The month after the Board issued institution decisions for the eight Aylo Ogdon IPRs, Fubo filed "copycat" IPR petitions with motions for joinder. Fubo used the Board's institution decisions to roadmap its theories, picking and choosing its petition grounds across the eight DISH ABR Patents based on whether the Board instituted or denied the Aylo Ogdon IPRs. As shown below, this resulted in Fubo filing copycat petitions for the five instituted Aylo Ogdon IPRs and the three Aylo Leaning IPRs on patents where the corresponding Aylo Ogdon IPR was denied.

Third Wave Challenges – Fubo's Road-Mapped Copycat IPRs				
Case	**Challenged Claims**	**Filing Date**	**Prior Art Asserted**	**Status**
IPR2024-00901 ('798 Patent)	1-9, 11-19, 21-24	May 13, 2024	**Ogdon**, Allen, SMIL 2.0, Shteyn	Institution Granted, Joined with IPR2024-00043
IPR2024-00902 ('138 Patent)	1, 3-12, 14-20, 22-25, 27-29	May 13, 2024	**Ogdon**, Allen, SMIL 2.0	Institution Granted, Joined with IPR2024-00044
IPR2024-00903 ('554 Patent)	1-5, 7-8, 10-14, 16-20, 22-28, 30	May 13, 2024	**Ogdon**, Allen, SMIL 2.0	Institution Granted, Joined with IPR2024-00045
IPR2024-00904 ('680 Patent)	1-2, 4-12, 14-19, 21-25, 27-29	May 13, 2024	**Ogdon**, Allen, SMIL 2.0	Institution Granted, Joined with IPR2024-00046
IPR2024-00905 ('555 Patent)	1, 3-5, 7-11, 13-20, 22-27	May 13, 2024	**Ogdon**, Allen, SMIL 2.0	Institution Granted, Joined with IPR2024-00146
IPR2024-00917 ('156 Patent)	1-18	May 17, 2024	**Leaning PCT 2002**, Ala-Honkola	Institution Granted
IPR2024-00918 ('564 Patent)	1-16	May 17, 2024	**Leaning PCT 2002**, Gamble	Institution Granted
IPR2024-00919 ('772 Patent)	1-21	May 17, 2024	**Leaning PCT 2002**, Gamble	Institution Granted

In a series of decisions issued August 7-13, 2024, the Board exercised its discretion to deny institution of all eight of the Aylo Leaning IPRs. *See, e.g.*,

IPR2024-00517, Paper 13 at 24-25 (P.T.A.B. Aug. 7, 2024). The Board cited Aylo's abusive, serial petitioning practices and roadmapping concerns. *Id.* Later, the Board instituted IPR on Fubo's three copycat petitions that rely on Leaning PCT 2002.

D. Fourth Wave of Post-Grant Challenges

Undeterred by the Board's discretionary denial of the Aylo Leaning IPRs, Aylo separately filed requests for *ex parte* reexamination in September 2024 for each of the three patents for which the Aylo Ogdon IPRs and Aylo Leaning IPRs were denied.

Fourth Wave Challenges – Aylo's *Ex Parte* Reexamination Requests After Multiple Failed IPRs			
Case	**Challenged Claims**	**Prior Art Asserted**	**Status**
90/019,670 ('772 Patent)	1-21	**Leaning PCT 2002**, Gourely, Carmel, Willebeek-LeMair, Walker, Rodriguez	Reexamination ordered, stayed
90/019,671 ('564 Patent)	1-16	**Leaning PCT 2002**, Gourely, Carmel, Willebeek-LeMair, Walker, Rodriguez	Reexamination ordered, stayed
90/019,672 ('156 Patent)	1-18	**Leaning PCT 2002**, Gourely, Carmel, Willebeek-LeMair, Walker	Reexamination ordered, stayed

In May 2024, the Office issued the '234 Patent as another family member to DISH's ABR Patents. As summarized below, Aylo simultaneously filed a set of two "parallel" IPRs challenging the '234 Patent.

Aylo's Parallel IPRs on the Newly-Issued '234 Patent				
Case	**Challenged Claims**	**Filing Date**	**Prior Art Asserted**	**Status**
IPR2024-00940 ('234 Patent)	1-20	May 21, 2024	**Leaning PCT 2002**, Klements, Gamble	Institution Granted
IPR2024-00941 ('234 Patent)	1-20	May 21, 2024	**Ogdon**, Allen, Klements, Gamble	Institution Denied

E. Fifth Wave of Post-Grant Challenges

Next, WGCZ filed a series of six more IPRs, including the present Petition, between December 2024 and January 2025. Those IPRs are summarized in the below table.

Fifth Wave Challenges – Petitioner WGCZ's IPRs			
Case	**Challenged Claims**	**Filing Date**	**Prior Art Asserted**
IPR2025-00347 ('564 Patent)	1-16	December 20, 2024	**Leaning US 2008**, Gamble
IPR2025-00348 ('772 Patent)	1-21	December 20, 2024	**Leaning US 2008**, Gamble
IPR2025-00467 ('554 Patent)	1-14, 16-30	January 17, 2025	**Leaning US 2008**, Leighton, Reme, SMIL 2.0
IPR2025-00468 ('680 Patent)	1-12, 14-29	January 17, 2025	**Leaning US 2008**, Leighton, Reme, SMIL 2.0
IPR2025-00469 ('138 Patent)	1-12, 14-30	January 17, 2025	**Leaning US 2008**, Leighton, Reme, SMIL 2.0
IPR2025-00470 ('798 Patent)	1-25	January 17, 2025	**Leaning US 2008**, Leighton, Reme, SMIL 2.0, Dalby

The table below lists the total number of post grant challenges against DISH's ABR Patents. The table shows that DISH's ABR Patents have been subject to 35 post-grant challenges, with 17 of those challenges having already been instituted. By any measure, these repetitive attacks on the ABR Patents are abusive as to DISH and wasteful as to the Board's resources and time.

Total Post Grant Challenges Filed on DISH's ABR Patents				
Patent	**# IPR Petitions**	**# Ex Parte Reexamination Requests**	**# Post Grant Challenges**	**# Instituted Post Grant Challenges**
11,677,798	4	0	4	2
11,470,138	4	0	4	2
10,469,554	4	0	4	2
10,951,680	4	0	4	2
10,469,555	3	0	3	2
10,757,156	3	1	4	2
9,407,564	4	1	5	2
8,868,772	4	1	5	2
11,991,234	2	0	2	1
Grand Total:	**32**	**3**	**35**	**17**

III. THE BOARD SHOULD EXERCISE ITS DISCRETION TO DENY INSTITUTION UNDER 35 U.S.C. § 314(A)

The Director's discretion, under 35 U.S.C. § 314, is informed by 35 U.S.C. § 316(b), which requires the Director to "consider the effect of any such regulation [under this section] on the economy, the integrity of the patent system, the efficient administration of the Office, and the ability of the Office to timely complete proceedings instituted under this chapter." Consolidated Trial Practice Guide (November 2019) ("CTPG") at 56. Consistent with this statutory mandate, the Workload Management Memo aims to "improve PTAB efficiency, maintain PTAB capacity to conduct AIA proceedings,… and promote consistent application of discretionary considerations in the institution of AIA proceedings" by outlining a list of seven considerations with direct bearing on the Office's exercise of discretion. Memo at 2-3. The Petition here is a paragon of inefficiencies that the Memo seeks

to avoid. All Workload Management Factors weigh in favor of exercising discretion to deny institution.

The Board in *General Plastic* also recognized the role of the Director's discretion on efficiency, and further "recognize[d] the potential for abuse of the review process by repeated attacks on patents." CTPG at 56 (quoting *Gen. Plastic Indus. Co. v. Canon Kabushiki Kaisha*, IPR2016-01357, Paper 19 at 16-17 (P.T.A.B. Sept. 6, 2017) ("*General Plastic*")). The Petition here also exemplifies the type of abusive attacks and undesirable gamesmanship recognized by the Board.

The Director should therefore deny the Petition because the Workload Management Factors and the Board's precedent in *General Plastic* weigh heavily against institution.

A. Workload Management Factors Favor Denial

1. Factor 1: Prior adjudication

The validity of the '798 Patent has already been adjudicated by the Board, through a full trial, resulting in a Final Written Decision covering all but three of the claims challenged here. IPR2024-00043, Paper 62 at 91 (P.T.A.B. Apr. 14, 2025) (summarizing Board adjudication of Claims 1-9, 11-19, and 21-24). The fact "the PTAB . . . has already adjudicated the validity or patentability of the challenged patent claims" weighs heavily in favor of denying institution. Memo at 2.

2. Factor 2: Changes in law

Petitioner has not identified, nor have there been any, meaningful changes in

law impacting the scope of the Board's review relevant to this Petition since the '798 Patent issued in 2023.

3. Factor 3: Strength of the challenge

Weakness on the merits of the Petition also favor denial.[8] ***First***, Petitioner bears the burden of "establishing that references relied upon qualify as prior art." *Grünenthal GMBH v. Antecip Bioventures II LLC*, PGR2017-00022, Paper 50 at 14 (PTAB Nov. 14, 2018) (citing *Dynamic Drinkware, LLC v. Nat'l Graphics, Inc.*, 800 F.3d 1375, 1378-81 (Fed. Cir. 2015)). But Petitioner has not properly alleged or shown any competent evidence that Leaning US 2008 even qualifies as prior art to the '798 Patent. In fact, review of the instant petition reveals blatant copying errors taken from Aylo's second wave of IPR petitions.

Notably, Petitioner states that Leaning US 2008 is prior art under pre-AIA §102(b) because it "was filed on December 14, 2001 and published on June 20, 2002." Pet., 8. This is factually incorrect. Leaning US 2008 did not publish in 2002. Instead, Leaning US 2008 (EX1004) first published when it issued as a U.S. Patent in 2008. The 2008 issuance of Leaning US 2008 does not constitute §102(b) prior art to the '798 Patent because §102(b) requires the reference to be "patented or described

[8] Petitioner also intends to submit a separate preliminary response on the merits of the Petition in accordance with the interim process outlined in the Workload Management Memo.

in a printed publication … more than one year prior to the date of the application for patent in the United States." Leaning US 2008, however, issued ***four years after*** the priority date listed on the face of the '798 Patent. Leaning US 2008 therefore is not prior art under §102(b).

Petitioner has not alleged that Leaning US 2008 is prior art under any other basis. Nor has Petitioner sought to modify its Petition to assert a plausible basis for establishing Leaning US 2008 as prior art. Accordingly, the Petition should be rejected on its face for failing to meet this fundamental burden.[9]

Second, on the merits, the current Petition is also contradictory and weak. Petitioner contends that a POSITA would be motivated to use "the H.261 video codec disclosed by Leaning [US 2008]" to meet elements of each challenged claim, which require switching bitrates. Pet., 20-22. But this contention ignores that Leaning US 2008 expressly says switching bitrates with an "H.261" file is "not possible" because it results in "***serious mistracking***" during playback. EX1004, 13:11-33. Petitioner and its expert's failure to address that Leaning US 2008 directly

[9] Even if Petitioner were to somehow retroactively modify the Petition to assert Leaning US 2008 as prior art under §102(e), that too would fail because Petitioner has not met its burden to show that the "invention" claimed in Leaning US 2008 "finds a supporting disclosure in [International Patent Application No. PCT/GB01/05543 (*i.e.*, Leaning PCT 2002)] in compliance with § 112." *See In re Wertheim*, 646 F.2d 527, 537 (C.C.P.A. 1981).

teaches away from its proposed modification further demonstrates the weakness of the Petition.[10]

Third, despite relying solely on obviousness theories across all grounds, Petitioner failed to meaningfully rebut the objective indicia of non-obviousness, as required. The Board has repeatedly "cautioned petitioners…that petitions may be denied if they do not address known evidence of secondary considerations." *Stryker Corp.*, IPR2019-00817, Paper 10 at 28-29 (denying petition based on discretionary denial factors, finding failure to meaningfully address objective indicia evidence and findings from prior proceeding weighed against institution); *accord Robert Bosch Tool Corp. v. SD3 LLC*, IPR2016-01751, Paper 15 (P.T.A.B. Mar. 22, 2017) (denying institution for failure to address objective indicia presented during an ITC proceeding).

The Final Initial Determination in the ITC Investigation involving the ABR Patents, including family member patents to the '798 Patent (as adopted in relevant part by the ITC in its written opinion), made the following findings:

> [Technology expert] Dr. Jeffay demonstrated through corroborating evidence that [initial patent-owner] Move's success is tied to the "unique characteristics of the claimed invention." As Dr. Jeffay testified, the Move system was described as early as 2008 as offering "a smooth end user experience as the Move Media Player up-shifts and down-shifts in response to network and client CPU availability." Moreover, the Move Media Player's encoding technique allowed

[10] As noted, DISH reserves the right to provide additional detail regarding these weaknesses in its merits-POPR.

> streaming via HTTP, and the use of "[s]imple HTTP protocol transfer of media files from standard Web servers rather than deployment of expensive media servers' reduces cost and complexity." DISH further adduced evidence demonstrating that the Move Media Player was recognized as superior in streaming performance relative to its competitors, rebutting respondents' argument that "advancements in compression and encoding technologies," etc. account for the Move Media Player's success.
>
> In view of this record evidence, I [Chief ALJ] find DISH is entitled to a presumption that there is a nexus between the objective evidence of non-obvious DISH proffers and the claimed invention. I find respondents have not rebutted that presumption.
>
> … [analyzing evidence of objective indicia of nonobviousness]
>
> Having considered the claimed invention, the prior art, the objective indicia of non-obviousness, and the record as a whole, **I find that the objective indicia support a determination of non-obviousness. Thus, even if a hindsight combination of the prior art references identified by respondents would comprise every element of the claimed invention, I find that the objective evidence indicates a person of skill in the art at the time of the invention would not have found the invention to be obvious in view of those reference**s.

EX1009 at 213-17 (internal citations omitted, emphasis added). Thus, the Chief ALJ found that DISH's objective indicia evidence had "demonstrated long-felt but unresolved need and failure of others," and that DISH had "adduced evidence demonstrating surprising results," "commercial success," and "praise by others." *Id.*; *see also* EX2004 (Comm'n Op.) at 2 (adopting same).

Petitioner merely argues that the ITC's findings are "irrelevant" because Leaning US 2008 allegedly discloses "offering a smooth end user experience [during] up-shifts and down-shifts," which Petitioner characterizes as the "unique feature[]

of the claimed invention" identified by the ITC. Pet., 63. But Petitioner provides no support or analysis for its contention that Leaning discloses "smooth" streaming. In fact, Leaning US 2008 actually discloses that the system must "clear" the video player's buffer and wait for it to refill before resuming playback, each and every time there is a "shift" in playback quality. *E.g.*, EX1004, 8:48-65. But waiting for a buffer to refill before resuming playback does not result in a "smooth" end user streaming experience. Instead, it is associated with the well-known technique known as "progressive downloading," which the '798 Patent discloses in its "Background" section. EX1001, 2:15-25. And that technique is disparaged, and distinguished over, by the '798 Patent because of its intrinsic delays. *Id.*, 2:26-42. By contrast, Leaning US 2008 lauds the benefits of clearing its buffer and interrupting playback. EX1004, 7:5-10. Petitioner's contention that Leaning discloses the "unique characteristics of the claimed invention" identified by the ITC is entirely unsupported, and in fact contradicted by Petitioner's own analysis and evidence.

Because Petitioner failed to adequately address the objective indicia of non-obviousness, the Board should deny this Petition. *See Stryker Corp*, IPR2019-00817, Paper 10 at 27-29 (explaining that "Petitioner's failure to address the known evidence of secondary considerations further weighs in favor of denying institution," and collecting cases).

* * *

In sum, far from "compelling," Petitioner's challenge to the '798 Patent is weak and does not outweigh the discretionary denial factors.

4. Factor 4: Reliance on expert testimony

The Petition relies on expert testimony that matches the wording found in the Petition almost verbatim, and is thus conclusory and lacking in rational underpinnings. Further, the Petition contains several assertions of what a POSITA would supposedly find obvious without any evidentiary support beyond the expert's word. For example, Petitioner relies heavily on its expert to explain why Leaning US 2008's descriptions for audio encodings are relevant to video encodings, and to explain why example bitrates of 32 kbit/s would motivate a POSITA to encode a video "at a bitrate of no less than 600 kbps [*i.e.*, kbits/s]." Pet., 20-22 ("Leaning's example bitrates of 16, 24, and 32 kbit/s, respectively, are for audio encodings – which a POSITA would have understood generally require less data to stream than video encodings and thus typically have lower bitrates.") ("[S]imply encoding one of the video streams at a particular bitrate, such as the 1,920 kbps of the H.261 video format, would have been a simple and straightforward implementation of Leaning's teachings for a POSITA to make when switching from the audio to video embodiments of Leaning."). Similarly, Petitioner relies heavily on its expert to explain why it would be obvious to modify Leaning US 2008 to include the claimed ten-second delay. Pet., 55-56 ("A POSITA would have understood that such an inherent delay to include a ten second delay—which is enough time to generate and

load onto the server at least two subfiles. To the extent it is argued that an inherent delay does not include a ten second delay, it would have been obvious to a POSITA to include at least a ten second delay to provide enough time to generate and load onto the server at least two subfiles to ensure playback of live feeds." (citation omitted)).

Petitioner's reliance on uncorroborated expert testimony to show obviousness of undisclosed features also weighs against institution.

5. Factor 5: Settled expectations of the parties

The '798 Patent issued almost two years ago, and DISH's ABR Patents more generally have been in force for almost 15 years, with the earliest application in the priority chain dating back to 2004. Related patents in the family directed to similar subject matter, like U.S. Patent 7,818,444, issued on October 19, 2010. Indeed, the majority of DISH's ABR Patents expire this year. The public, including Petitioner, has therefore been on notice of DISH's ABR Patents for the many years since they have issued.

In addition, both the '798 Patent, and other family member ABR Patents have been licensed to numerous video streaming companies, demonstrating settled industry acceptance of the validity of these patents and their applicability to industry-standard video streaming implementations. *See* EX1009 at 135-45; *see also* EX2007.

These settled industry expectations weigh against institution.

6. Factor 6: Compelling economic and public health interests

DISH and its licensees utilize the patented ABR technology to provide millions of U.S. customers with reliable, low-latency, high-quality video streaming. For example, DISH utilizes its patented ABR technology across its streaming platforms, such as, Sling TV and DISH Anywhere. As another example, Peloton paid $75 million to use the patented technology when streaming content to its Peloton bike customers. *See* EX2007.

On the other hand, Petitioner is a Czech entity in the adult-content streaming business that has been accused of "benefiting from a sex trafficking venture" and "receipt and distribution of child pornography" in a U.S. Court. *See Jane Doe v. WebGroup Czech Republic, as*, No. 2:21-cv-02428, Dkt. 1 (C.D. Cal. Mar. 18, 2021). There are no conceivable public health benefits to instituting review here. To the contrary, both the public health and society overall would be better served by denying institution, thereby allowing DISH to prohibit Petitioner from continuing to use DISH's groundbreaking technology with impunity.

B. *General Plastic* Factors Favor Denial

The precedential *General Plastic* decision established a list of seven non-exhaustive factors that are designed to prevent the precise "potential for abuse" presented by Petitioner's 11-month delay in filing this Petition after two previous petitions asserting overlapping prior art and theories. *General Plastic* at 17. As demonstrated below, all seven *General Plastic* factors weigh heavily against

institution.

1. Factor 1: The numerous prior petitions, and Petitioner's use of them to draft this Petition, weigh against institution

Factor 1 relates to whether any previous petitions have been filed directed to the same claims of the same patent. This factor "is not limited solely to instances when multiple petitions are filed by the same petitioner." *Valve Corp. v. Elec. Scripting Prods., Inc.*, IPR2019-00062, Paper 11 at 2, 9 (P.T.A.B. Apr. 2, 2019) (precedential) ("*Valve*"). Indeed, "the *General Plastic* factors provide a useful framework for analyzing the facts and circumstances present in this case, in which a different petitioner filed a petition challenging a patent that had been challenged already by previous petitions." *Shanghai Lunion Info. Tech., Ltd. v. Telefonaktiebolaget LM Ericsson*, IPR2018-00995, Paper 12 at 15 (P.T.A.B. Nov. 13, 2018).

As shown below, all Challenged Claims have been challenged by a prior petition:

Overlap of Claims Challenged Across Serial Petitions			
Claims Challenged Here	**Challenged in Aylo Ogdon IPR?**	**Challenged in Aylo Leaning IPR?**	**Previous Post Grant Challenge to Claim?**
1	✓	✓	YES
2	✓	✓	YES
3		✓	YES
4	✓	✓	YES
5	✓	✓	YES
6	✓	✓	YES
7	✓	✓	YES

8	✓	✓	YES
9	✓	✓	YES
10		✓	YES
11	✓	✓	YES
12	✓	✓	YES
13	✓	✓	YES
14	✓	✓	YES
15	✓	✓	YES
16	✓	✓	YES
17	✓	✓	YES
18	✓	✓	YES
19	✓	✓	YES
20		✓	YES
21	✓	✓	YES
22	✓	✓	YES
23	✓	✓	YES
24	✓	✓	YES
25		✓	YES

"Based on the Board's experience, one petition should be sufficient to challenge the claims of a patent in most situations. Two or more petitions filed against the same patent … may place a substantial and unnecessary burden on the Board and the patent owner and could raise fairness, timing, and efficiency concerns." CTPG at 59 (citing 35 U.S.C. § 316(b)). Discretionary denial is therefore appropriate because the same claims have been challenged numerous times before.

The Petition here also asserts a substantially identical primary reference as the respective Aylo Leaning IPR. The Petition's primary reference is Leaning US 2008 (EX1004) and the Aylo Leaning IPRs' primary reference is Leaning PCT 2002 (EX2003). Leaning US 2008 is the U.S. national stage entry of Leaning PCT 2002. EX1004, Face. Aside from the claims, which were modified during prosecution of

Leaning US 2008, the Leaning US 2008 and Leaning PCT 2002 disclosures and figures are identical. *See* Appendix 1.

In addition, the Petition here asserts Leaning US 2008 in substantially the same way as the respective Aylo Leaning IPR asserts Leaning PCT 2002.[11] Aside from minor modifications for word choice and paraphrasing, portions of the Petition are ***directly copied*** from the Aylo Leaning IPR. *See* Appendix 1 (comparing text of Petition's claim element analysis for elements 1[A]-[C] against corresponding analysis from Aylo Leaning IPR).

Nowhere is Petitioner's copying of the Aylo Leaning IPR more blatant than in its description of Leaning US 2008 itself as § 102(b) prior art. There, Petitioner copied Aylo's basis for asserting Leaning PCT 2002, ***a published application***, as prior art under § 102(b) because its publication date was June 20, 2002. *Compare* Pet., 8 ("Leaning is prior art under at least (pre-AIA) 35 U.S.C. § 102(b)"), *with* Aylo Leaning IPR at 12 (same). But the Office did not publish Leaning US 2008 until it issued that U.S. patent in 2008. Thus, in its careless copying, Petitioner failed to set forth that Leaning US 2008 has a much later publication date than Leaning PCT 2002, which is the primary reference in the respective Aylo Leaning IPR. Leaning US 2008 is not § 102(b) art because it issued in 2008, which is ***four years***

[11] The Petition also asserts one of the same secondary references (SMIL 2.0, EX1006) as all three prior petitions.

after the proper priority date recited on the face of the '798 Patent. This clear error thus exposes WGCZ's blatant copying of the Aylo Leaning IPR.

Even where not directly copied word-for-word, the analysis is the same with many elements directly corresponding between the petitions. For example, both the current Petition and the Aylo Leaning IPR rely on the very same analysis and disclosures of Leaning US 2008 and Leaning PCT 2002 to disclose elements 1[A]-[C]. Highlighting is included in the below comparison chart to correlate the identical underlying disclosures cited in the similar analysis sections between the current Petition and the Aylo Leaning IPR.[12] As shown below, the thrust of the arguments and evidence in these sections is exactly the same between petitions even if the language is not verbatim identical.

Disclosure of Leaning US 2008 Cited in Current Petition	**Corresponding Portion of Leaning PCT 2002 Cited in Aylo Leaning IPR (IPR2024-00517)**
1[A]: "at least one storage device storing digital content,"	1[A]: "at least one storage device storing digital content,"
"Leaning discloses at least one server storing the video." EX1004, 17:12-13 ("video material which is stored on a remote server"); EX1003, ¶¶102-103.	Leaning discloses at least one server storing the video. EX1004, 6:13-26 ("the **server stores two or more versions of the recording**, . . . **loaded onto the server in separate directories** corresponding to the different rate, as in the following example structure, where '008k', '024k' in the directory name indicates a rate of 8 kbit/s or 24 kbit/s and so on."); EX1003, ¶60.

[12] Bold and italics were included in the original petitions unless otherwise specified.

1[B]: "the digital content encoded at a plurality of different bit rates creating a plurality of streams including a first bit rate stream, a second bit rate stream, and a third bit rate stream,"	1[B]: "the digital content encoded at a plurality of different bit rates creating a plurality of streams including a first bit rate stream, a second bit rate stream, and a third bit rate stream,"
Leaning discloses that the recording (audio and/or video) is digitally encoded at a plurality of different bitrates (different compression rates) creating a plurality of streams including a first low quality bitrate stream (*e.g.*, 8 or 16 kbit/s), a second medium quality bitrate stream (*e.g.*, 24 kbit/s), and a third high quality bitrate stream (*e.g.*, 32 kbit/s).	Leaning discloses that the recording (audio and/or video) is digitally encoded at a plurality of different bitrates (different compression rates) creating a plurality of streams including a first low quality bitrate stream (*e.g.*, 8 or 16 kbit/s), a second medium quality bitrate stream (*e.g.*, 24 kbit/s), and a third high quality bitrate stream (*e.g.*, 32 kbit/s).
Leaning's server "stores two or more versions of the recording, recorded at ***different compression rates*** (for example at compressions corresponding to (continuous) data rates of ***8, 16, 24 and 32 kbit/s respectively***)…loaded onto the server in separate directories corresponding to the different rate, as in the following example structure, where '008k', '024k' in the directory name indicates a rate of 8 kbit/s or 24 kbit/s and so on." EX1004, 5:27-48. Leaning applies the same methodology "to the delivery of ***video recordings***…[such that] [t]he manner of partitioning the file into sub-files is unchanged." EX1004, 12:48-60. EX1003, ¶¶104-106.	EX1004, 6:13-26 ("the server stores two or more versions of the recording, recorded at **different compression rates** (for example at compressions corresponding to (continuous) data rates of **8, 16, 24 and 32 kbit/s respectively**) . . . loaded onto the server in separate directories corresponding to the different rate, as in the following example structure, where '008k', '024k' in the directory name indicates a rate of 8 kbit/s or 24 kbit/s and so on."), 9:3-7, 16:6-12 ("The **same principle** may be applied to the delivery of **video recordings**. . . the file is a video file (e.g. in H.261 or MPEG format) and the player program incorporates a video decoder. The manner of partitioning the file into sub-files is unchanged. As in the audio case, there may be **two or more recordings corresponding to different data rates, selected by the control mechanism already described**."), claim 4; EX1003, ¶61.

1[C]: "wherein the first bit rate stream, the second bit rate stream, and the third bit rate stream each comprise a group of streamlets encoded at a respective one of the plurality of different bit rates, each group of streamlets comprising at least first and second streamlets, each of the streamlets corresponding to a portion of the digital content;"	1[C]: "wherein the first bit rate stream, the second bit rate stream, and the third bit rate stream each comprise a group of streamlets encoded at a respective one of the plurality of different bit rates, each group of streamlets comprising at least first and second streamlets, each of the streamlets corresponding to a portion of the digital content;"
Leaning discloses the first bitrate stream (*e.g.*, 8 or 16 kbit/s), the second bitrate stream (*e.g.*, 24 kbit/s), and the third bitrate stream (*e.g.*, 32 kbit/s) each comprise a group of streamlets (subfiles) wherein each streamlet (subfile) in each group of streamlets is encoded at a respective one of the plurality of different bitrates (8, 16, 24, or 32 kbit/s), wherein each group of streamlets comprises at least first (*e.g.*, 000000.bin) and second (*e.g.* 000001.bin) streamlets each corresponding to a portion (temporal portion) of the video.	Leaning further discloses the first bitrate stream (*e.g.*, 8 or 16 kbit/s), the second bitrate stream (*e.g.*, 24 kbit/s), and the third bitrate stream (*e.g.*, 32 kbit/s) each comprise a group of streamlets (subfiles) wherein each streamlet (subfile) in each group of streamlets is encoded at a respective one of the plurality of different bitrates (8, 16, 24, or 32 kbit/s), wherein each group of streamlets comprises at least first (*e.g.*, 000000.bin) and second (*e.g.* 000001.bin) streamlets each corresponding to a portion (temporal portion) of the video.
EX1004, Abstract ("dividing the material into a ***sequence of sub-files*** each of which is independently requested by the terminal…switching between ***alternative sub-file sets*** representing ***alternative delivery modes of data rates***.").	EX1004, Abstract ("dividing the material into a **sequence of sub-files** each of which is independently requested by the terminal . . . switching between **alternative sub-file sets** representing **alternative delivery modes of data rates**."),
Leaning discloses "The present invention is concerned with the delivery, over a telecommunications link, of digitally coded material for presentation to a user… there is provided a terminal for playing audio or video material which is stored on a remote server as a ***set of files***	[EX1004,] 1:3-29 ("The present invention is concerned with the delivery, over a telecommunications link, of digitally coded material for presentation to a user. . . . there is provided a terminal for playing audio or video material which is stored on a remote server as a **set of files**

representing successive temporal portions of the said material…the invention provides a method of transmitting digitally coded audio or video material comprising: ***partitioning the material into a plurality of discrete files each representing successive temporal portions of the said material***; storing the files at a first station; and at a second station - a) transmitting to the first station requests for successive respective ones of the files; b) receiving the files; and c) decoding the files for replay of the material." EX1004, 1:11-51.	**representing successive temporal portions** of the said material . . . the invention provides a method of transmitting digitally coded audio or video material comprising: **partitioning the material into a plurality of discrete files each representing successive temporal portions of the said material**; storing the files at a first station; and at a second station - a) transmitting to the first station requests for successive respective ones of the files; b) receiving the files; and c) decoding the files for replay of the material."),
Further, "the file ***is divided into smaller files***…of a size corresponding to a fixed playing time, perhaps four seconds….In this example these are given file names which include a serial number indicative of their sequence in the original file, for example: ***000000.bin 000001.bin*** 000002.bin 000003.bin.. 000134.bin… 'sub-files' is used here to distinguish them from the original file containing the whole recording." EX1004, 2:57-3:10; *see also id.* 5:41-6:27 (describing the same set of 135 sub-files (000000.bin, 000001.bin, 000002.bin, 000134.bin) each encoded at a different bitrate including low, medium, and high quality (8k, 16k, 18k, 24k, and 32k) and listed in an index file and saved in the directory appropriate for their bitrates),	[EX1004,] 3:-22 ("the file **is divided into smaller files** before being stored on the server 1. We prefer that each of these smaller files is of a size corresponding to a fixed playing time, perhaps four seconds. . . . divided into **135 smaller files** each representing four seconds' playing time. In this example these are given file names which include a serial number indicative of their sequence in the original file, for example: **000000.bin 000001.bin** 000002.bin 000003.bin. . .000134.bin. . . . 'sub-files' is used here to distinguish them from the original file containing the whole recording: it should however be emphasised that, as far as the server is concerned, each sub-file' is just a file like any other file)."), 5:4-6:8, 6:21-7:7 (describing the same set of 135 sub-files (000000.bin, 000001.bin, 000002.bin. . . 000134.bin) each encoded at a different bitrate including low, medium, and high quality (8k,

	16k, 18k, 24k, and 32k) and listed in an index file and saved in the directory appropriate for their bitrates),

Given the immense overlap between theories and evidence, Petitioner provides no explanation as to why it elected to file its own Petition rather than relying on the joinder process of 37 C.F.R. § 42.122(b) for its overlapping challenge. Instead, Petitioner opted to strategically delay accepting service of DISH's infringement complaint, despite Petitioner's U.S. counsel's confirmed receipt of that complaint one-week after filing (EX2006). And Petitioner opted to delay filing this Petition until the last possible day before its one-year bar date, to gain access to and build upon the prior petitions and other relevant case filings to draft its Petition. This is the epitome of roadmapping. As shown below, prior to filing this Petition, Petitioner had access to not only the prior petitions, but also all relevant filings in each case, including DISH's preliminary and post-institution briefing, hearing slides, and the statements made by DISH and the Board during oral argument, as well as the Board's decision denying institution of the Aylo Leaning IPR.

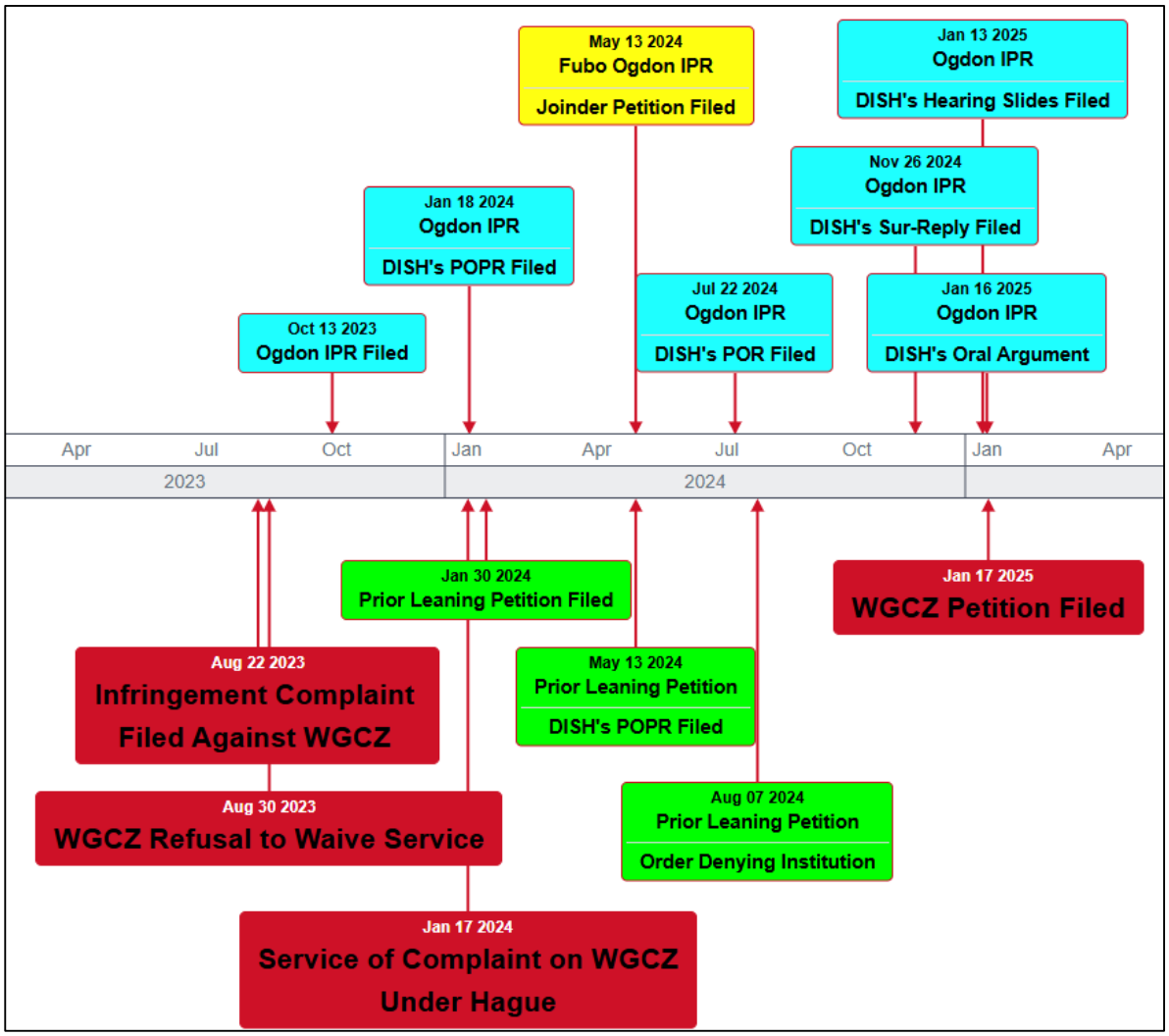

Petitioner waited to file this Petition until the last possible day—its § 315(b) bar date of January 17, 2025. Petitioner thus filed the instant Petition ***fifteen months*** after the Aylo Ogdon IPRs were filed, ***nearly a year*** after the Aylo Leaning IPR was filed, and the ***day after oral argument*** in the Aylo Ogdon IPR. Petitioner does not and cannot deny that it had a window of time to access and use these materials to draft its Petition. That is "road-mapping," and it is prohibited under precedent. *General Plastic* at 17-18 (holding that using "multiple, staggered petitions challenging the same patent and same claims" creates "the potential for abuse" by

allowing later petitioners to use prior proceedings "as a roadmap" and is "unfair to patent owners"); *see also* Aylo Leaning IPR, Paper 13 (ID) at 17-18 (citing concerns over roadmapping in denying institution).

Valve explains that when different petitioners challenge the same patent, the Board will consider the relationship between them, and, if the petitioners have a "significant relationship . . . with respect to [the challenged patent]," then the Board will consider the first petition in its *General Plastic* analysis. *Valve* at 9-10. Critically, no formal business relationship between petitioners is necessary for the Board to find a "significant relationship" under factor 1. "[U]se [of] prior petitions as a roadmap for its own petition ties the interests of all of the petitioners together" and thus creates a "significant relationship" under *Valve*. *Ericsson Inc., v. Uniloc 2017, LLC*, IPR2019-01550, Paper 8 at 12 (P.T.A.B. Mar. 17, 2020) (finding *General Plastic* factor 1 favored denial of petitioner's first-filed petition because "[m]ultiple, staggered petitions challenging the same patent and same claims raise the potential for abuse"). That type of relationship is indisputably present here, where Petitioner copied and modified the prior art and theories asserted in prior petitions even to the point of blatantly copying the wrong prior art basis, as § 102(b), even though the primary reference was published four years after the critical date.

To be sure, however, in *Videndum Production Solutions, Inc. v. Rotolight Ltd.*, the former USPTO Director held in a nonprecedential decision that where "the first

and second petitioners are neither the same party, nor possess a significant relationship under *Valve*, *General Plastic* factor one necessarily outweighs the other *General Plastic* factors." IPR2023-01218, Paper 12 at 6 (P.T.A.B. Apr. 19, 2024). Prior to that non-precedential decision, however, Board panels routinely exercised discretion under § 314(a) to deny institution of a second party's petition, even with no significant relationship between petitioners. *See, e.g.*, *Ericsson Inc., v. Uniloc 2017 LLC*, IPR2020-00420, Paper 7 at 9 (P.T.A.B. June 18, 2020) (denying institution of second petitioner's petition despite no "significant relationship" with prior petitioners); *Shanghai Lunion*, IPR2018-00995, Paper 12 at 15 (denying institution of second petitioner's petition because discretion "is not limited to situations where the same party files multiple petitions"); *Google LLC v. Uniloc 2017 LLC*, IPR2019-01584, Paper 7 at 15-16 (P.T.A.B. Mar. 24, 2020) (denying institution of follow-on petitioner's petition under *General Plastic* after two unrelated petitioners filed petitions on the same patent). Thus, even if factor 1 were to be determined to be neutral or weigh against exercising discretion to deny, the balance of the remaining *General Plastic* factors outweigh the first.

2. Factor 2: Petitioner was aware of its primary reference (Leaning US 2008), one of its secondary references (SMIL 2.0), and the Aylo Leaning IPR for over 11-months prior to filing

Factor 2 relates to prior knowledge of the asserted references. *General Plastic* at 20. Factor 2 weighs in favor of denying institution because Petitioner had

knowledge of ***two of the five*** references asserted in the Petition for at least 11 months prior to filing this Petition.

Petitioner was sued for infringement of the '798 Patent on August 22, 2023, and served with a complaint on January 17, 2024. If Petitioner had conducted a "reasonably diligent" prior art search,[13] it would have at least begun its search shortly after it had been sued, but at least would have begun searching immediately after formal service of the complaint under the Hague Service Convention.[14] Such a prior art search would have at least included monitoring the IPR docket of cases filed against the patents it was accused of infringing. Petitioner therefore should have been aware of the Aylo Leaning IPR shortly after its filing on January 30, 2024.

---

[13] Petitioner failed to provide "any explanation [of] why [it] could not have found the newly asserted prior art in any earlier search(es) through the exercise of reasonable diligence." *General Plastic* at 20. In this regard, Petitioner provides no explanation of what steps it took to uncover prior art, whether it previously knew of the Leaning US 2008 or SMIL 2.0 references, or why it waited to file this Petition until its statutory deadline of January 17, 2025. The Board may therefore infer that Petitioner knew of Leaning US 2008 and SMIL 2.0 shortly after the filing date of the Aylo Leaning IPR from Petitioner's failure to state otherwise.

[14] Petitioner's counsel in the co-pending district court lawsuit acknowledged receipt of the complaint one week after it was filed on August 22, 2013, but indicated that Petitioner WGCZ was "not amenable to agreeing to waiver of service" thereof, forcing DISH to pursue service under the Hague Service Convention. EX2006.

Here, WGCZ's Petition relies on the references Leaning US 2008 and SMIL 2.0. Similarly, the Aylo Leaning IPR asserted Leaning PCT 2002 as the primary reference across all grounds, with SMIL 2.0 as a secondary reference in one ground. Leaning PCT 2002 is the near identical international publication of Leaning US 2008 asserted here. *See* Appendix 2. Petitioner's knowledge of Leaning US 2008 is therefore imputed by virtue Petitioner's presumed knowledge of the substantially identical Leaning PCT 2002. Moreover, any reasonably diligent search would have involved identification of family member patents and publications. Accordingly, had it conducted a reasonably diligent search, Petitioner would have been aware of Leaning US 2008 shortly after the filing of the Aylo Leaning IPR.

Petitioner's imputed knowledge of Leaning US 2008 extends even prior to its receipt of the Aylo Leaning IPR. Petitioner admits that a ***substantially identical*** publication to Leaning US 2008 asserted here—Leaning US App 2004 (EX2001), which later issued as Leaning US 2008—was cited during prosecution and ***"was cited on the face of the '798 Patent***." Pet., 8.[15] Any reasonably diligent search would involve reviewing the references cited on the face of the asserted patent. Accordingly, if Petitioner had conducted a reasonable search, it would have been aware of Leaning

[15] Corresponding identical disclosures between Leaning US 2008 (EX1004 in this Petition), Leaning PCT 2002 (cited in the Aylo Leaning IPR), and Leaning US App 2004 (cited during prosecution and on the face of the '798 Patent) are shown in Appendix 2.

US 2008 shortly after the initial lawsuit was filed in August 2023—15 months before it filed this Petition.

Regarding SMIL 2.0, the very same reference is asserted here in Ground 3. Petitioner therefore would also have been aware of the SMIL 2.0 reference by virtue of the Aylo Leaning IPR. Petitioner's prior knowledge of the prior art asserted here weighs against institution.

3. Factor 3: Petitioner had access to and impermissibly used relevant filings in prior IPRs on the '798 Patent and related patents as a "roadmap" for this Petition

The third *General Plastic* factor considers "whether at the time of filing of the second petition[,] the petitioner already received the patent owner's preliminary response to the first petition or received the Board's decision on whether to institute review in the first petition." *General Plastic* at 9. Prior to filing its Petition, Petitioner had access to all of these materials (and more) in multiple prior IPRs against the '798 Patent. This factor thus favors denial.

As explained above (§§III.B.1-2), Petitioner filed this Petition ***more than 11-months*** after the Aylo Leaning IPR, which relied on a substantially identical primary reference and included similar arguments based on that reference. This Petition was also filed ***more than 8-months*** after DISH filed its preliminary response to the Aylo Leaning IPR and ***more than 5-months*** after receiving the Board's decision denying institution of the Aylo Leaning IPR. Petitioner also had access to the complete trial record in the Aylo Ogdon IPRs. This includes DISH's preliminary response, post-

institution briefing, and oral argument, describing the technical deficiencies with that Petition.

The core concern under this factor is whether Petitioner had the opportunity to "tailor its arguments to address issues identified by the patent owner and/or the Board during a prior proceeding," thereby gaining an improper advantage. *NetApp v. Realtime Data*, IPR2017-01354, Paper 16 at 11 (P.T.A.B. Nov. 14, 2017). By waiting until its § 315(b) statutory deadline to file this Petition, Petitioner made sure that it had ample opportunity to study all of these prior filings and use them as a roadmap to correct issues and fill gaps identified by DISH and the Board. Institution under these circumstances would prejudice DISH. *General Plastic* at 11 ("the filing of sequential attacks against the same claims, with the opportunity to morph positions along the way, imposes inequities on Patent Owner").

4. Factors 4 and 5: Petitioner provides no explanation for the nearly year-long delay in filing this Petition

Factor 4 weighs against institution if the petitioner delays filing a follow-on petition after learning of prior art, while factor 5 considers whether the petitioner's explanation for that delay is adequate to favor institution despite the otherwise excessive delay. *General Plastic* at 9. Where, as here, a petitioner waits months or a year to assert art already known or readily discoverable—particularly when it provides no meaningful justification for the delay—factors 4 and 5 weigh decisively against institution. *Id*. at 10-11.

As explained above, Petitioner waited almost a year after the Aylo Leaning IPR before filing this follow-on Petition. This delay not only allowed Petitioner to piggyback on the prior petitioner's work in the Aylo Leaning IPR, but also gave Petitioner the unfair advantage of analyzing DISH's preliminary response and the Board's rationale in denying institution of the Aylo Leaning IPR. Petitioner had ample opportunity to file copy-cat petitions or file a motion for joinder of the Aylo Leaning IPR.[16] But instead, Petitioner chose to craft a "new" petition with its own spin on a substantially identical reference ***a year later***. *See TomTom, Inc. v. Blackbird Tech, LLC*, IPR2017-02025, Paper 7 at 15-17 (P.T.A.B. Mar. 12, 2018) (noting that the Board is "mindful of the potential inequity of parties filing multiple petitions," where Petitioner has "relie[d] on substantially similar references and analyses" and "[has] not shown sufficiently, how the [asserted] references are different enough to warrant institution").

Petitioner offers no explanation for its delay. Petitioner has not and cannot argue that it was unaware of Leaning US 2008 or that Leaning US 2008 was recently discovered through a new search sparked by changing circumstances. Moreover, Petitioner offers no justification as to why it waited until its statutory deadline to file.

[16] In fact, WGCZ filed two copycat petitions on the instituted Fubo Leaning IPRs, showing that WGCZ filed copycat petitions when it strategically benefited them to do so. *See* IPR2025-00347 (copycat of Fubo's IPR2024-00918); IPR2025-00348 (copycat of Fubo's IPR2024-00919).

These facts weigh squarely in favor of denial. *Apple Inc. v. Uniloc 2017 LLC*, IPR2020-00854, Paper 9 at 11 (P.T.A.B. Oct. 28, 2020) (denying institution because petitioner provided "no context by which [the Board could] ascertain [petitioner's] knowledge of the prior art asserted …," preventing the Board from "determin[ing] how much time elapsed between [petitioner's] knowledge of the prior art[, which was asserted in a prior IPR by a different petitioner] and the filing of [petitioner's] second petition.").

The Board typically denies institution for far shorter delays. *See, e.g.*, *ByteDance Ltd. v. Triller, Inc.*, IPR2021-00774, Paper 6 at 13 (P.T.A.B. Oct. 12, 2021) (finding that a "***five-month delay***" was not justified under a similar fact pattern); *Longi Green Energy Tech. Co. v. Hanwha Sols. Corp.*, IPR2020-00047, Paper 18 at 10-12 (P.T.A.B. Apr. 27, 2020) (finding factors 4 and 5 favor discretionary denial based on a "***four-month delay***" between petitions challenging non-overlapping claims where the petitioner did not provide any rationale as to why it could not have identified the additional references earlier); *see also General Plastic* at 10-11 (factors 4 and 5 favor discretionary denial when the petitioner "provide[s] no explanation why it could not have found this new prior art earlier—prior to filing the first-filed petitions—through the exercise of reasonable diligence."). Indeed, the Board denied institution of the Aylo Leaning IPR based on the prior Petitioner's unexplained "***3 ½ month*** gap between the two petitions."

IPR2024-00517, Paper 13 at 22. The delay here is far longer, but equally unexplained.

For at least these reasons, factors 4 and 5 weigh strongly against institution.

5. Factors 6 and 7: Institution of this Petition would result in a significant waste of the Board's resources, and prejudice to DISH

General Plastic factors 6 and 7 are directed to efficiency and the Board's resources and are informed by the Board's guidance in the July 2019 Trial Practice Guide Update:

> Based on the Board's prior experience, ***one petition should be sufficient*** to challenge the claims of a patent in most situations. Two or more petitions filed against the same patent at or about the same time (e.g., before the first preliminary response by the patent owner) may place a substantial and unnecessary burden on the Board and the patent owner and could raise fairness, timing, and efficiency concerns. *See* 35 U.S.C. § 316(b).

CTPG at 59.

The finite resources of the Board should not be squandered for WGCZ here, where the Board has already conducted a full trial on the '798 Patent (the Aylo Ogdon IPR), considered (and rejected) a second IPR petition on the '798 Patent (the Aylo Leaning IPR), and where 17 prior post-grant challenges have already been instituted against DISH's ABR Patents. The Board should deny this fourth post-grant

challenge to the '798 Patent because, as the Board's guidance confirms, "one petition" is sufficient. CTPG at 59.

Moreover, if review was instituted here, the Board will be burdened with almost ***3 years*** (35 months) of pending IPRs against the '798 Patent. Petitioner had ample opportunity to join the Aylo Leaning IPR or to file its own petition within a more reasonable time frame. Petitioner chose neither of these more efficient routes, opting instead for delay and access to Patent Owner's positions and arguments. In this regard, Petitioner's delay guarantees that this round of petitions will have a different schedule than any other post-grant challenges. As the Board has previously observed, "the most efficient way to manage the two *inter partes* reviews would be to coordinate or consolidate the proceedings and adopt a common schedule." *ByteDance*, IPR2021-00774, Paper 6 at 13. But because Petitioner waited to file this Petition until well after, for example, Fubo's Leaning-based petitions were instituted, "it is no longer feasible for the Board to adjust due dates to coordinate the proceedings." *Id*. at 13-14. Petitioner's decision to delay filing imposes redundant and burdensome workload on the Patent Office that weighs against institution.

Instituting review here would also severely prejudice DISH by allowing Petitioner to stand on the shoulders of prior petitioners and leverage DISH's and the Board's analysis of those prior petitioners' arguments in crafting the current Petition. *See supra* § III.B.3. Moreover, when coupled with appeals, institution of this

proceeding would impose a delay of almost ***five years*** on DISH's pursuit of damages claims in District Court, with DISH bearing the cost of defending against these serial challenges. Consistent with its denial of the Aylo Leaning IPR, the Board should therefore also exercise its discretion to deny this Petition in light of its prejudicial effect on DISH.

* * * *

The Board should therefore exercise its discretion under 35 U.S.C. § 314(a) to deny institution of this Petition.

IV. THE BOARD SHOULD EXERCISE ITS DISCRETION TO DENY INSTITUTION UNDER 35 U.S.C. § 325(D)

The Board should also decline institution under 35 U.S.C. § 325(d) because Leaning US 2008's disclosures are entirely cumulative of disclosures in the Leaning US App 2004 reference already considered during the original examination of the '798 Patent. Moreover, the Leaning PCT 2002 reference was already considered during the Board's preliminary evaluation of both the Aylo Leaning IPR and during prosecution of a patent in the same family as the '798 Patent.

Section 325(d) provides that the Board may elect not to institute trial if "the same or substantially the same prior art or arguments previously were presented to the Office." The Board applies a two-part framework: "(1) whether the same or substantially the same art previously was presented to the Office"; and, if so, (2) "whether the petitioner has demonstrated that the Office erred in a manner material

to the patentability of challenged claims." *Advanced Bionics, LLC v. MED-EL Elektromedizinsche Gerate GmbH*, IPR2019-01469, Paper 6, at 8 (P.T.A.B. Feb. 13, 2020) (precedential). "Previously presented art includes…art provided to the Office by an applicant, such as on an Information Disclosure Statement (IDS), in the prosecution history of the challenged patent." *Id.* at 7-8; *see also Biocon Pharma Ltd. v. Novartis Pharms. Corp.*, IPR2020-01263, Paper 12 at 8-9 (P.T.A.B. Feb. 16, 2021) (denying institution based on art previously presented in an IDS).

The Petition fails both stages of the *Advanced Bionics* framework.

A. The Examiner Considered the Same or Substantially the Same Art During Prosecution (Becton, Dickinson Factors (a), (b), and (d))

All grounds in the Petition rely on Leaning US 2008 as the primary reference. But a substantially similar publication, Leaning US App 2004, was already at issue in the original examination of the '798 Patent and, accordingly, was cited on the face of the '798 Patent. Leaning US App 2004 was filed by the same two inventors as Leaning US 2008 and shares a virtually identical specification with Leaning US 2008 (therefore rendering the Leaning US 2008 reference cumulative). *See* EX2001 (Leaning US App 2004); EX2002 (showing redline comparison of Leaning US App 2004 against Leaning US 2008); EX1001 at [56].

As reflected in a "List of References Cited by Applicant and Considered by Examiner" dated May 5, 2023, the Examiner considered Leaning US App 2004 (*i.e.*, U.S. Patent App. Pub. No. 2004/0030547 by Leaning et al.) during the original

examination. EX1002 at 530 (showing Leaning US App 2004 not lined through and stating, with examiner's initials, "ALL REFERENCES CONSIDERED EXCEPT WHERE LINED THROUGH"). A redline comparison of Leaning US 2008 and Leaning US App 2004 shows that the specifications are virtually identical. EX2002. Indeed, every one of Petitioner's citations to Leaning US 2008 has a corresponding passage in Leaning US App 2004 that is identical in substance, and in most cases, appears verbatim in Leaning US App 2004. *See* Appendix 2 (showing Petitioner's citations to Leaning US 2008 (EX1004) that are identical to passages in Leaning US App 2004 (EX2001)). Further, as shown in Appendix 3, even Leaning US 2008's abstract and first-page introduction are substantially the same as passages in Leaning US App 2004.

Petitioner concedes that Leaning US App 2004, which is substantially identical to Leaning US 2008 relied on in the Petition, "was cited on the face of the '798 Patent." Pet., 8. Indeed, Petitioner concedes that Leaning US App 2004 (EX2001) was listed in an IDS during prosecution of the '798 Patent. Pet., 67. The uncontested facts alone demonstrate that the first prong of the *Advanced Bionics* framework is met. *Advanced Bionics*, IPR2019-01469, Paper 6 at 7-8; *see also Google LLC v. Valtrus Innovations Ltd.*, IPR2022-01197, Paper 18 at 15-16 (P.T.A.B. June 13, 2023) (stating, on remand after Director review, "[o]ur precedent holds that providing a document to the Office in an Information Disclosure

Statement is sufficient to satisfy prong one of the *Advanced Bionics* analysis as long as that 'previously presented' art is 'the same or substantially the same' as that presented in the Petition").

Petitioner argues that Leaning US App 2004 was "never substantively addressed during prosecution" and that the Examiner's consideration of Leaning US App 2004 should be ignored because "[b]eyond the Examiner initialing every reference in the IDS (EX1002), there is no evidence that the Examiner actually considered the disclosures of [Leaning US App 2004]." Pet., 67. Petitioner's arguments and speculation contradict the Board's precedential ruling in *Advanced Bionics*, which makes clear that "[p]reviously presented art includes art made of record by the Examiner, and art provided to the Office by an applicant, such as on an Information Disclosure Statement (IDS), in the prosecution history of the challenged patent." *Advanced Bionics*, IPR2019-01469, Paper 6 at 7-8; *see also Medtronic CoreValve LLC v. Speyside Med., LLC*, IPR2021-00241, Paper 9 at 23 (P.T.A.B. July 23, 2021) (denying institution where references were included on IDSs but not expressly included in a rejection by the Examiner). Indeed, "the first part of the *Advanced Bionics* framework does not require that an Examiner provide a 'discussion, analysis, or other findings on the applicability' of the relevant material contained in an IDS." *Keysight Techs., Inc. v. Centripetal Networks, Inc.*, IPR2022-01421, Paper 14 at 5 (P.T.A.B. Aug. 24, 2023); *see also Google LLC*, IPR2022-

01197, Paper 18 at 15-16.

To be sure, the former Director issued non-binding guidance suggesting that "application of section 325(d) should be limited to situations in which the prior art or arguments were meaningfully addressed by the Office," *i.e.*, that *Advanced Bionics* step one should be limited to where the Office has both "evaluated the art or arguments and articulated its consideration of the art or arguments in the record of the application." 89 F.R. 28693, 28700 (Apr. 19, 2024). However, a more recent Delegated Rehearing Panel decision clarified that step one of *Advanced Bionics* is indeed satisfied by "an initialed Information Disclosure Statement." *Siemens Mobility Inc. v. Metrom Rail, LLC*, IPR2024-00947, Paper 16 at 11 (P.T.A.B. Apr. 4, 2025) (explaining that "[p]reviously presented art" under *Advanced Bionics* Step 1 "includes art made of record by the Examiner, and art provided to the Office by an applicant, such as on an Information Disclosure Statement (IDS)"; though denying institution because reference only appeared in Examiner's "search results" and was not otherwise made of record). The Leaning US 2008 reference at issue here therefore qualifies as "previously presented art" under precedential decisions and the most recent and relevant guidance because the Examiner initialed an IDS listing the substantially identical Leaning US App 2004 reference during prosecution of the '798 Patent.

For these reasons, the first prong of the *Advanced Bionics* framework is met.

B. Petitioner Does Not Show that the Office Materially Erred in Evaluating the Prior Art

Petitioner also fails to meet its burden to show that "the Office erred in a manner material to the patentability of challenged claims." *Advanced Bionics*, IPR2019-01469, Paper 6 at 8-9. As the Board explained in *Advanced Bionics*, "[i]f a condition in the first part of the framework is satisfied and the petitioner fails to make a showing of material error, the Director generally will exercise discretion not to institute *inter partes* review." *Id.*; *see also Ocado Grp. PLC v. AutoStore Tech. AS*, IPR2021-00412, Paper 9 at 38 (P.T.A.B. July 21, 2021) ("[N]either Petitioner nor [its expert] present any argument or persuasive evidence that there was any material error by the Office. This is a required element of Petitioner's burden to overcome our exercise of discretionary denial under Section 325(d)."). Here, it is undisputed that Leaning US App 2004 was considered by the Examiner during the original examination. *See* Pet., 67. Yet Petitioner fails to compare or contrast the teachings of Leaning US App 2004 with those of Leaning US 2008 or any reference relied upon by the Examiner in rejecting the claims. Furthermore, Petitioner does not even attempt an argument of error on the part of the Office with respect to consideration of the similarly-cumulative Leaning PCT 2002 in the respective Aylo Leaning IPR. Thus, Petitioner has failed to carry its burden to show error by the Examiner.

Instead, Petitioner urges the Board to reach a different conclusion on the same

facts present before the Examiner, asserting only that Leaning US App 2004 "was never used in a rejection and [] was never substantively addressed during prosecution of the '798 Patent." *Id*. That assertion, which only goes to the first part of the *Advanced Bionics* test, is insufficient to meet Petitioner's burden to show error. *See, e.g.*, *Xilinx Inc. v. Analog Devices, Inc.*, IPR2021-00294, Paper 9 at 28 (P.T.A.B. June 10, 2021) ("Petitioner does not provide any indication that the Examiner's prior art analysis in the prosecution history was error."). Moreover, the Board has rejected such assertions that failure to apply a reference in a rejection is sufficient to warrant declining to exercise discretionary denial under Section 325(d). *See, e.g.*, *Biocon*, IPR2020-01263, Paper 12 at 9 (rejecting "Petitioner's contention that, even though [the reference] appears on an IDS, we should decline to exercise discretion under § 325(d) because [the reference] was 'not applied by the Examiner'").

Because Petitioner admittedly knew a "substantially identical" reference to Leaning US 2008 was already substantively considered by the Examiner, yet failed to demonstrate non-cumulativeness or material error by the Office, the Board should exercise its discretion to deny institution under § 325(d).

V. CONCLUSION

For the foregoing reasons, Patent Owner respectfully requests the Director exercise her discretion to deny Petitioner's request for IPR of the '798 Patent.

Respectfully Submitted,

Date: May 16, 2025

/ Eliot D. Williams /
Eliot D. Williams (Reg. No. 50,822)
BAKER BOTTS L.L.P.
700 K Street, N.W.
Washington, D.C. 20001
202.639.1334

G. Hopkins Guy III (Reg. No. 35,886)
BAKER BOTTS L.L.P.
1001 Page Mill Road, Bldg. 1, Suite 200
Palo Alto, California 94304-1007
650.739.7500

Ali Dhanani (Reg. No. 66,233)
Thomas B. Carter Jr. (Reg. No. 76,040)
BAKER BOTTS L.L.P.
910 Louisiana St.
Houston, TX 77002
713.229.1108

Attorneys for Patent Owner, DISH Technologies L.L.C.

APPENDIX 1 – ANALYSIS COPIED FROM AYLO'S LEANING PETITION

Disclosure of Leaning US 2008 Cited in Current Petition	Corresponding Portion of Leaning PCT 2002 Cited in Aylo Leaning IPR (IPR2024-00517)
1[A]: "at least one storage device storing digital content,"	1[A]: "at least one storage device storing digital content,"
"Leaning discloses at least one server storing the video." EX1004, 17:12-13 ("video material which is stored on a remote server");	Leaning discloses at least one server storing the video. EX1004, 6:13-26 ("the **server stores two or more versions of the recording**, […])
1[B]: "the digital content encoded at a plurality of different bit rates creating a plurality of streams including a first bit rate stream, a second bit rate stream, and a third bit rate stream,"	1[B]: "the digital content encoded at a plurality of different bit rates creating a plurality of streams including a first bit rate stream, a second bit rate stream, and a third bit rate stream,"
Leaning discloses that the recording (audio and/or video) is digitally encoded at a plurality of different bitrates (different compression rates) creating a plurality of streams including a first low quality bitrate stream (*e.g.*, 8 or 16 kbit/s), a second medium quality bitrate stream (e.g., 24 kbit/s), and a third high quality bitrate stream (e.g., 32 kbit/s).	Leaning discloses that the recording (audio and/or video) is digitally encoded at a plurality of different bitrates (different compression rates) creating a plurality of streams including a first low quality bitrate stream (*e.g.*, 8 or 16 kbit/s), a second medium quality bitrate stream (*e.g.*, 24 kbit/s), and a third high quality bitrate stream (*e.g.*, 32 kbit/s).
Leaning's server "stores two or more versions of the recording, recorded at ***different compression rates*** (for example at compressions corresponding to (continuous) data rates of ***8, 16, 24 and 32 kbit/s respectively***)…loaded onto the server in separate directories corresponding to the different rate, as in the following example structure, where '008k', '024k' in the directory name indicates a rate of 8 kbit/s or 24 kbit/s and so	EX1004, 6:13-26 ("the server stores two or more versions of the recording, recorded at **different compression rates** (for example at compressions corresponding to (continuous) data rates of **8, 16, 24 and 32 kbit/s respectively**) . . . loaded onto the server in separate directories corresponding to the different rate, as in the following example structure, where '008k', '024k' in the directory name indicates a rate of 8 kbit/s or 24

on." EX1004, 5:27-48. Leaning applies the same methodology "to the delivery of ***video recordings***…[such that] [t]he manner of partitioning the file into sub-files is unchanged." EX1004, 12:48-60. EX1003, ¶¶104-106.	kbit/s and so on."), 9:3-7, 16:6-12 ("The **same principle** may be applied to the delivery of **video recordings**. . . the file is a video file (e.g. in H.261 or MPEG format) and the player program incorporates a video decoder. The manner of partitioning the file into sub-files is unchanged. […]),
1[C]: "wherein the first bit rate stream, the second bit rate stream, and the third bit rate stream each comprise a group of streamlets encoded at a respective one of the plurality of different bit rates, each group of streamlets comprising at least first and second streamlets, each of the streamlets corresponding to a portion of the digital content;"	1[C]: "wherein the first bit rate stream, the second bit rate stream, and the third bit rate stream each comprise a group of streamlets encoded at a respective one of the plurality of different bit rates, each group of streamlets comprising at least first and second streamlets, each of the streamlets corresponding to a portion of the digital content;"
Leaning discloses the first bitrate stream (*e.g.*, 8 or 16 kbit/s), the second bitrate stream (*e.g.*, 24 kbit/s), and the third bitrate stream (*e.g.*, 32 kbit/s) each comprise a group of streamlets (subfiles) wherein each streamlet (subfile) in each group of streamlets is encoded at a respective one of the plurality of different bitrates (8, 16, 24, or 32 kbit/s), wherein each group of streamlets comprises at least first (*e.g.*, 000000.bin) and second (*e.g.* 000001.bin) streamlets each corresponding to a portion (temporal portion) of the video.	Leaning further discloses the first bitrate stream (*e.g.*, 8 or 16 kbit/s), the second bitrate stream (*e.g.*, 24 kbit/s), and the third bitrate stream (*e.g.*, 32 kbit/s) each comprise a group of streamlets (subfiles) wherein each streamlet (subfile) in each group of streamlets is encoded at a respective one of the plurality of different bitrates (8, 16, 24, or 32 kbit/s), wherein each group of streamlets comprises at least first (*e.g.*, 000000.bin) and second (*e.g.* 000001.bin) streamlets each corresponding to a portion (temporal portion) of the video.
EX1004, Abstract ("dividing the material into a ***sequence of sub-files*** each of which is independently requested by the terminal…switching between ***alternative sub-file sets***	EX1004, Abstract ("dividing the material into a **sequence of sub-files** each of which is independently requested by the terminal . . . switching between **alternative sub-file sets**

representing ***alternative delivery modes of data rates***.").	representing **alternative delivery modes of data rates**."),
Leaning discloses "The present invention is concerned with the delivery, over a telecommunications link, of digitally coded material for presentation to a user… there is provided a terminal for playing audio or video material which is stored on a remote server as a ***set of files representing successive temporal portions*** of the said material…the invention provides a method of transmitting digitally coded audio or video material comprising: ***partitioning the material into a plurality of discrete files each representing successive temporal portions of the said material***; storing the files at a first station; and at a second station - a) transmitting to the first station requests for successive respective ones of the files; b) receiving the files; and c) decoding the files for replay of the material." EX1004, 1:11-51.	[EX1004,] 1:3-29 ("The present invention is concerned with the delivery, over a telecommunications link, of digitally coded material for presentation to a user. . . . there is provided a terminal for playing audio or video material which is stored on a remote server as a **set of files representing successive temporal portions** of the said material . . . the invention provides a method of transmitting digitally coded audio or video material comprising: **partitioning the material into a plurality of discrete files each representing successive temporal portions of the said material**; storing the files at a first station; and at a second station - a) transmitting to the first station requests for successive respective ones of the files; b) receiving the files; and c) decoding the files for replay of the material."),
Further, "the file ***is divided into smaller files***…of a size corresponding to a fixed playing time, perhaps four seconds….In this example these are given file names which include a serial number indicative of their sequence in the original file, for example: ***000000.bin 000001.bin*** 000002.bin 000003.bin.. 000134.bin… 'sub-files' is used here to distinguish them from the original file containing the whole recording." EX1004, 2:57-3:10; *see also id.* 5:41-6:27 (describing the same set of 135 sub-files (000000.bin,	[EX1004,] 3:-22 ("the file **is divided into smaller files** before being stored on the server 1. We prefer that each of these smaller files is of a size corresponding to a fixed playing time, perhaps four seconds. . . . divided into **135 smaller files** each representing four seconds' playing time. In this example these are given file names which include a serial number indicative of their sequence in the original file, for example: **000000.bin 000001.bin** 000002.bin 000003.bin. . .000134.bin. . . . 'sub-

000001.bin, 000002.bin, 000134.bin) each encoded at a different bitrate including low, medium, and high quality (8k, 16k, 18k, 24k, and 32k) and listed in an index file and saved in the directory appropriate for their bitrates),	files' is used here to distinguish them from the original file containing the whole recording: it should however be emphasised that, as far as the server is concerned, each sub-file' is just a file like any other file)."), 5:4-6:8, 6:21-7:7 (describing the same set of 135 sub-files (000000.bin, 000001.bin, 000002.bin. . . 000134.bin) each encoded at a different bitrate including low, medium, and high quality (8k, 16k, 18k, 24k, and 32k) and listed in an index file and saved in the directory appropriate for their bitrates),

APPENDIX 2 – MAPPING OF SUBSTANTIALLY IDENTICAL DISCLOSURES ACROSS IPRS AND LEANING REFERENCES

Petitioner WGCZ's IPR Cites to Leaning US 2008 (EX1004)	Aylo Leaning IPR Cites to Leaning PCT 2002 (EX2003)	Substantially Identical Portions of Leaning US App 2004 (EX2001)
2:4-49	2:5-32	[0016]-[0018]
2:50-4:22	3:1-4:34	[0019]-[0034]
4:23-6:40	5:1-7:7	[0036]-[0050]
5:14-8:65	6:5-11:1	[0043]-[0057]
9:29-50	11:21-12:7	
9:51-10:27	12:8-34	[0063]-[0064]
10:61-11:43	13:23-14:24	[0072]-[0087]
11:61-12:2	15:3-8	[0089]
12:48-13:39	16:6-17:10	[0090]-[0095]
13:42-14:64	17:12-19:5	[0096]-[0114]
14:19-64	18:3-19:5	[0101]-[0114]
14:65-15:22	19:6-21	[0115]-[0117]
15:42-16:17	20:1-41	[0119]-[0120]
Chart @ 5-6	Chart @ 7	Chart at [0049]
Chart @ 7-8	Chart @ 9-11	Chart at [0057]
Fig. 1	Fig. 1	Fig. 1
Fig. 2	Fig. 2	Fig. 2
Fig. 4	Fig. 4	Fig. 4

APPENDIX 3 – COMPARISON OF LEANING DISCLOSURES RELIED UPON ACROSS IPRS

WGCZ's IPR Cites to Leaning US 2008 (EX1004)	Aylo Leaning IPR Cites to Leaning PCT 2002 (EX2003)	Substantially Identical Disclosures in Leaning US App 2004 (EX2001)
Abstract: "Delivery of recorded audio or video material over a telecommunications link from a server"	Abstract: "Delivery of recorded audio or video material over a telecommunications link (2) from a server (1) to a terminal (3)"	Abstract: "A system for transmitting audio signals over a telecommunications link …." [0001]: "The present invention is concerned with the delivery, over a telecommunications link, of digitally coded material for presentation to a user." [0016]: "The system shown in FIG. 1 has as its object the delivery, to a user, of digitally coded audio signals (for example, of recorded music or speech) via a telecommunications network to a user terminal where the corresponding sounds are to be played to the user. However, as will be discussed in more detail below, the system may be used to convey video signals instead of, or in addition to, audio signals."
Abstract: "is accomplished by dividing the material into a sequence of sub-files each of which is independently requested by the terminal,"	Abstract: "is accomplished by dividing the material into a sequence of sub-files each of which is independently requested by the terminal,"	Abstract: "[T]he input signal is notionally divided into temporal portions and each is coded by taking it … and encoding it …." [0019]: "Originally this would have been created as a single data file, and on a conventional streamer would be stored as this one single file. Here, however, the file is divided into smaller files before being stored on the server 1." [0027]-[0029]: "The partitioning of the file into these smaller sub-files may typically be performed by the person preparing the file for loading onto the web server 1. (The expression "sub-files" is used here to distinguish them from the original file containing the whole

WGCZ's IPR Cites to Leaning US 2008 (EX1004)	Aylo Leaning IPR Cites to Leaning PCT 2002 (EX2003)	Substantially Identical Disclosures in Leaning US App 2004 (EX2001)
		recording: it should however be emphasised that, as far as the server is concerned each "sub-file" is just a file like any other file). The precise manner of their creation will be described more fully below. Once created, these sub-files are uploaded onto the server in a conventional manner just like any other file being loaded onto a web server. Of course the filename could also contain characters identifying the particular recording (the sub-file could also be "tagged" with additional information—when you play an MP3 file you get information on the author, copyright etc), but in this example the sub-files are stored on the server in a directory or folder specific to the particular recording—e.g. mp3_bwv565. Thus a sub-file, when required, may be requested in the form: http:\\www.server1.com/mp3_bwv565/000003.bin where "www.server1.com" is the URL of the server 1."
Abstract: "which thereby has control of the rate of delivery."	Abstract: "which thereby has control of the rate of delivery."	[0018]: "Conventionally, a server for delivery of MP3 files takes the form of a so-called streamer which includes processing arrangements for the dynamic control of the rate at which data are transmitted depending on the replay requirements at the user terminal, for the masking of errors due to packet loss and, if user interaction is allowed, the control of the flow of data between server and client; here however the server 1 contains no such provision. Thus it is merely an ordinary "web server"."

WGCZ's IPR Cites to Leaning US 2008 (EX1004)	Aylo Leaning IPR Cites to Leaning PCT 2002 (EX2003)	Substantially Identical Disclosures in Leaning US App 2004 (EX2001)
		[0057]: "The actual rate change is effected simply by the player program changing the relevant part of the sub-file address for example, changing "008k" to "024k" to increase the data rate from 8 to 24 kbit/s, and changing the current rate parameter to match. As a result, the next request to the server becomes a request for the higher (or lower) rate, and the sub-file from the new directory is received, decoded and entered into the buffer."
Abstract: "Provision may be made for switching between alternative sub-file sets representing alternative delivery modes or data rates."	Abstract: "Provision may be made for switching between alternative sub-file sets representing alternative delivery modes or data rates."	[0045]: "a) the server stores two or more versions of the recording, recorded at different compression rates (for example at compressions corresponding to (continuous) data rates of 8, 16, 24 and 32 kbit/s respectively) and the player program is able to switch automatically between them."
1:11-40: "The present invention is concerned with the delivery, over a telecommunications link, of digitally coded material for presentation to a user. In known systems of this type, a special server – often called a "streamer", controls delivery of material to a user terminal. Often, in the server, an item of material to be transmitted is stored as a single file; though U.S. Pat. No. 5,610,841 describes a video server which stores the material segmented into "media segment files". Another	1:3-19: "The present invention is concerned with the delivery, over a telecommunications link, of digitally coded material for presentation to a user. In known systems of this type, a special server - often called a "streamer", controls delivery of material to a user terminal. Often, in the server, an item of material to be transmitted is stored as a single file; though U.S. patent 5 610 841 describes a	[0016]: "The system shown in FIG. 1 has as its object the delivery, to a user, of digitally coded audio signals (for example, of recorded music or speech) via a telecommunications network to a user terminal where the corresponding sounds are to be played to the user. However, as will be discussed in more detail below, the system may be used to convey video signals instead of, or in addition to, audio signals." [0003]: "notionally dividing an input signal into successive temporal portions;" [0032]: "Turning now to the terminal, this may typically take the form of a conventional desktop computer, with, however, additional software for handling the reception of the audio files discussed. If desired, the terminal could take the

WGCZ's IPR Cites to Leaning US 2008 (EX1004)	Aylo Leaning IPR Cites to Leaning PCT 2002 (EX2003)	Substantially Identical Disclosures in Leaning US App 2004 (EX2001)
such system is described in published European patent application EP-A-669 587, where network congestion is accommodated by the terminal monitoring the contents of its receive buffer and, where appropriate, requesting the server to adjust its video data rate. According to one aspect of the invention there is provided a terminal for playing audio or video material which is stored on a remote server as a set of files representing successive temporal portions of the said material, the terminal comprising: a telecommunications interface for communication with the server; a buffer for receiving the files from the telecommunications interface;	video server which stores the material segmented into "media segment files". Another such system is described in published European patent application EP-A-669 587, where network congestion is accommodated by the terminal monitoring the contents of its receive buffer and, where appropriate, requesting the server to adjust its video data rate. According to one aspect of the invention there is provided a terminal for playing audio or video material which is stored on a remote server as a set of files representing successive temporal portions of the said material, the terminal comprising: a telecommunications interface for communication with the server; a buffer for receiving the files from the	form of a handheld computer, or even be incorporated into a mobile telephone. Thus FIG. 2 shows such a terminal with a central processor 30, memory 31, a disk store 32, a keyboard 33 video display 34, communications interface 35, and audio interface ("sound card") 36." [0036]: "The program constructs a request message for the file having this URL and transmits it to the server 1 via the communications interface 35 and the internet 2." [0057]: "As a result, the next request to the server becomes a request for the higher (or lower) rate, and the sub-file from the new directory is received, decoded and entered into the buffer." Fig.2. 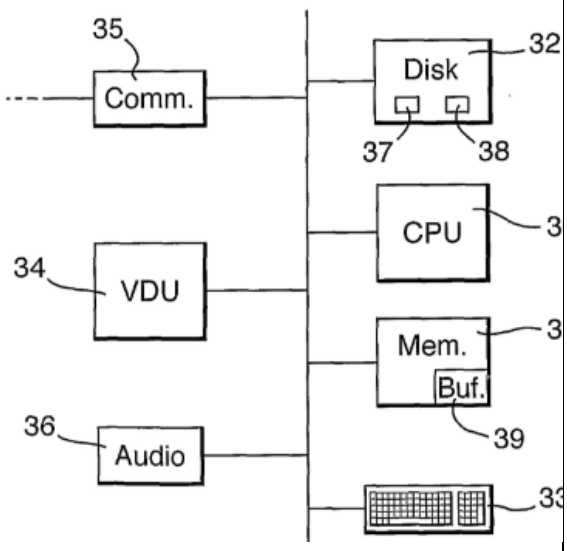 [0035]-[0042]: "3. The player program 37 includes an MP3 decoder, the operation of which is, in itself, conventional. Of more interest in the present context are the

WGCZ's IPR Cites to Leaning US 2008 (EX1004)	Aylo Leaning IPR Cites to Leaning PCT 2002 (EX2003)	Substantially Identical Disclosures in Leaning US App 2004 (EX2001)
means for playing the contents of the buffer, and control means responsive to the state of the buffer to generate request messages for further files for replenishment of the buffer.	telecommunications interface; means for playing the contents of the buffer; and control means responsive to the state of the buffer to generate request messages for further files for replenishment of the buffer.	control functions of the program which are as follows. 4. The player program, having received the URL, adds to this the filename of the first sub-file, to produce a complete address for the sub-file—i.e. www.server1/mp3_bwv565/000000.bin. It will be observed that this system is organized on the basis that the sub-files are named in the manner indicated above, so that the terminal does not need to be informed of the filenames. The program constructs a request message for the file having this URL and transmits it to the server 1 via the communications interface 35 and the internet 2. (Processes for translating the URL into an IP address and for error reporting of invalid, incomplete or unavailable URLs are conventional and will not therefore be described). We envisage that the player program would send the requests directly to the communications interface, rather than via the browser. The server responds by transmitting the required sub-file. 5. The player program determines from the file the audio decoding used in this sub-file and decodes the file back to raw PCM values in accordance with the relevant standard (MP3 in this example), making a note of the play time of this sub-file. Generally an audio file contains an identifier at the beginning of the file which states the encoding used. The decoded audio data is then stored in the audio buffer 38. 6. The player program has a parameter called the playout time T p. In this example it is set at 10 seconds (it could be

WGCZ's IPR Cites to Leaning US 2008 (EX1004)	Aylo Leaning IPR Cites to Leaning PCT 2002 (EX2003)	Substantially Identical Disclosures in Leaning US App 2004 (EX2001)
		made user-selectable, if desired). It determines the degree of buffering that the terminal performs. 7. The player program increments the filename to 000001.bin and requests, receives, decodes and stores this second sub-file as described in (4) and (5) above. It repeats this process until the contents of the buffer reach or exceed the playout time T p. Note that it is not actually essential that the decoding occurs before the buffer but it simplifies matters as since the audio is decoded back to raw PCM then the duration of the buffered material is then explicitly known. It simplifies the control of the audio buffer if each of the sub-files is the same audio playback size. 8. Having reached the playout threshold T p the decoded data are sent from the buffer to the audio interface 36 which plays the sound through a loudspeaker (not shown). 9. Whilst playing the sounds as in (8) above, the player program continually monitors the state of buffer fullness and whenever this falls below T p it increments the filename again and obtains a further sub-file from the server. This process is repeated until a "file not found error" is returned. 10. If, during this process, the buffer becomes empty, the player program simply ceases playing until further data arrives."
1:41-51: "In another aspect, the invention provides a method of transmitting digitally	1:20-28: "In another aspect, the invention provides a method of transmitting digitally	[0016]: "The system shown in FIG. 1 has as its object the delivery, to a user, of digitally coded audio signals (for example, of recorded music or speech) via

WGCZ's IPR Cites to Leaning US 2008 (EX1004)	Aylo Leaning IPR Cites to Leaning PCT 2002 (EX2003)	Substantially Identical Disclosures in Leaning US App 2004 (EX2001)
coded audio or video material comprising: partitioning the material into a plurality of discrete files each representing successive temporal portions of the said material; storing the files at a first station; and at a second station— a) transmitting to the first station requests for successive respective ones of the files; b) receiving the files; and c) decoding the files for replay of the material."	coded audio or video material comprising: partitioning the material into a plurality of discrete files each representing successive temporal portions of the said material; storing the files at a first station; and at a second station – a) transmitting to the first station requests for successive respective ones of the files; b) receiving the files; and c) decoding the files for replay of the material."	a telecommunications network to a user terminal where the corresponding sounds are to be played to the user. However, as will be discussed in more detail below, the system may be used to convey video signals instead of, or in addition to, audio signals." [0001]-[0003]: "The present invention is concerned with the delivery, over a telecommunications link, of digitally coded material for presentation to a user. According to one aspect of the invention there is provided a method of encoding audio signals comprising notionally dividing an input signal into successive temporal portions …." [0027]-[0029]: "The partitioning of the file into these smaller sub-files may typically be performed by the person preparing the file for loading onto the web server 1. (The expression "sub-files" is used here to distinguish them from the original file containing the whole recording: it should however be emphasised that, as far as the server is concerned each "sub-file" is just a file like any other file). The precise manner of their creation will be described more fully below. Once created, these sub-files are uploaded onto the server in a conventional manner just like any other file being loaded onto a web server. Of course the filename could also contain characters identifying the particular recording (the sub-file could also be "tagged" with additional information—when you play an MP3 file you get information on the author, copyright etc), but in this example the sub-files are stored on the server in a

WGCZ's IPR Cites to Leaning US 2008 (EX1004)	Aylo Leaning IPR Cites to Leaning PCT 2002 (EX2003)	Substantially Identical Disclosures in Leaning US App 2004 (EX2001)
		directory or folder specific to the particular recording—e.g. mp3_bwv565. Thus a sub-file, when required, may be requested in the form: http:\\www.server1.com/mp3_bwv565/000003.bin where "www.server1.com" is the URL of the server 1." [0035]-[0042]: "3. The player program 37 includes an MP3 decoder, the operation of which is, in itself, conventional. Of more interest in the present context are the control functions of the program which are as follows. 4. The player program, having received the URL, adds to this the filename of the first sub-file, to produce a complete address for the sub-file—i.e. www.server1/mp3_bwv565/000000.bin. It will be observed that this system is organised on the basis that the sub-files are named in the manner indicated above, so that the terminal does not need to be informed of the filenames. The program constructs a request message for the file having this URL and transmits it to the server 1 via the communications interface 35 and the internet 2. (Processes for translating the URL into an IP address and for error reporting of invalid, incomplete or unavailable URLs are conventional and will not therefore be described). We envisage that the player program would send the requests directly to the communications interface, rather than via the browser. The server responds by transmitting the required sub-file.

WGCZ's IPR Cites to Leaning US 2008 (EX1004)	Aylo Leaning IPR Cites to Leaning PCT 2002 (EX2003)	Substantially Identical Disclosures in Leaning US App 2004 (EX2001)
		5. The player program determines from the file the audio decoding used in this sub-file and decodes the file back to raw PCM values in accordance with the relevant standard (MP3 in this example), making a note of the play time of this sub-file. Generally an audio file contains an identifier at the beginning of the file which states the encoding used. The decoded audio data is then stored in the audio buffer 38. 6. The player program has a parameter called the playout time T p. In this example it is set at 10 seconds (it could be made user-selectable, if desired). It determines the degree of buffering that the terminal performs. 7. The player program increments the filename to 000001.bin and requests, receives, decodes and stores this second sub-file as described in (4) and (5) above. It repeats this process until the contents of the buffer reach or exceed the playout time T p. Note that it is not actually essential that the decoding occurs before the buffer but it simplifies matters as since the audio is decoded back to raw PCM then the duration of the buffered material is then explicitly known. It simplifies the control of the audio buffer if each of the sub-files is the same audio playback size. 8. Having reached the playout threshold T p the decoded data are sent from the buffer to the audio interface 36 which plays the sound through a loudspeaker (not shown). 9. Whilst playing the sounds as in (8) above, the player program continually

WGCZ's IPR Cites to Leaning US 2008 (EX1004)	Aylo Leaning IPR Cites to Leaning PCT 2002 (EX2003)	Substantially Identical Disclosures in Leaning US App 2004 (EX2001)
		monitors the state of buffer fullness and whenever this falls below T p it increments the filename again and obtains a further sub-file from the server. This process is repeated until a "file not found error" is returned. 10. If, during this process, the buffer becomes empty, the player program simply ceases playing until further data arrives."

CERTIFICATE OF SERVICE

Pursuant to 37 C.F.R. §§ 42.6(e), we certify that an electronic copy of the foregoing PATENT OWNER'S PRELIMINARY RESPONSE BRIEF ON DISCRETIONARY DENIAL ISSUES Pursuant to 37 C.F.R. § 42.107(a) along with any accompanying exhibits was served on Petitioner's counsel of record at the following address:

Jimglass@quinnemmanuel.com
quincylu@quinnemmanuel.com
chrismatthews@quinnemmanuel.com
brianmack@quinnemmanuel.com

Date: May 16, 2025

/ Eliot D. Williams /
Eliot D. Williams (Reg. No. 50,822)
Andrew Wilson (Reg. No. 74,093)
Jamie R. Lynn (Ref. 63,666)
G. Hopkins Guy III (Reg. No. 35,886)
Ali Dhanani (Reg. No. 66,233)
Thomas B. Carter Jr. (Reg. No. 76,040)
BAKER BOTTS L.L.P.
700 K Street, N.W.
Washington, D.C. 20001
202.639.1334

Attorneys for Patent Owner, DISH Technologies L.L.C.

CERTIFICATION UNDER 37 C.F.R. § 42.24(d)

Pursuant to 37 C.F.R. § 42.24(d), the undersigned hereby certifies that the word count under §42.24(b)(1) for the foregoing PATENT OWNER'S PRELIMINARY RESPONSE BRIEF ON DISCRETIONARY DENIAL ISSUES to the Petition for *Inter Partes* Review totals 11,929 words, within the 14,000 word limit allowed under § 42.24(a)(1)(i).

Date: May 16, 2025

/ Eliot D. Williams /
Eliot D. Williams (Reg. No. 50,822)
Andrew Wilson (Reg. No. 74,093)
Jamie R. Lynn (Ref. 63,666)
BAKER BOTTS L.L.P.
700 K Street, N.W.
Washington, D.C. 20001
202.639.1334
202.639.1312
202.639.7786

G. Hopkins Guy III (Reg. No. 35,886)
BAKER BOTTS L.L.P.
1001 Page Mill Road, Bldg. 1, Suite 200
Palo Alto, California 94304-1007
650.739.7500

Ali Dhanani (Reg. No. 66,233)
Thomas B. Carter Jr. (Reg. No. 76,040)
BAKER BOTTS L.L.P.
910 Louisiana St.
Houston, TX 77002
713.229.1108
713.229.1505

Attorneys for Patent Owner, DISH Technologies L.L.C.