67. As will be demonstrated in the charts below, at least the Asserted Claims of the ’843 patent are rendered obvious by Lindahl in view Yamamoto and in further view of Clark. I have not been asked to review additional claims as to their validity in light of this combination. However, should I be asked to do so, I will perform a validity analysis on all the claims of the ’843 patent. For reference, these three pieces of prior art are shown below:

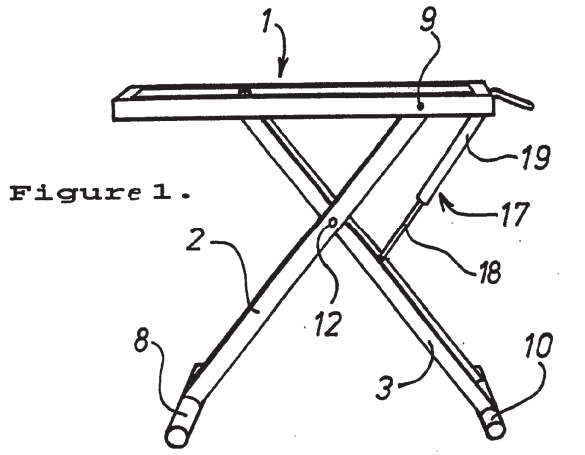	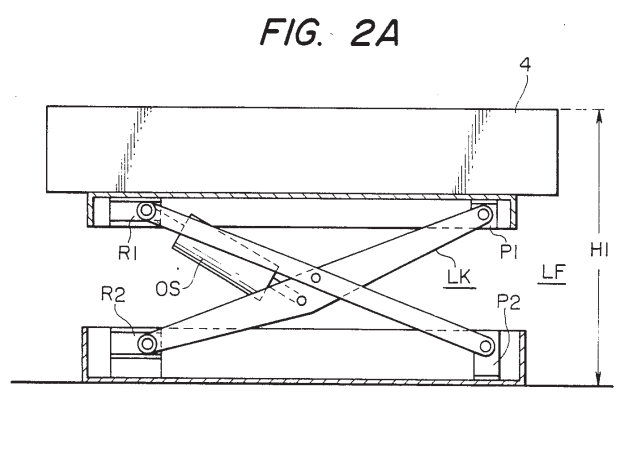	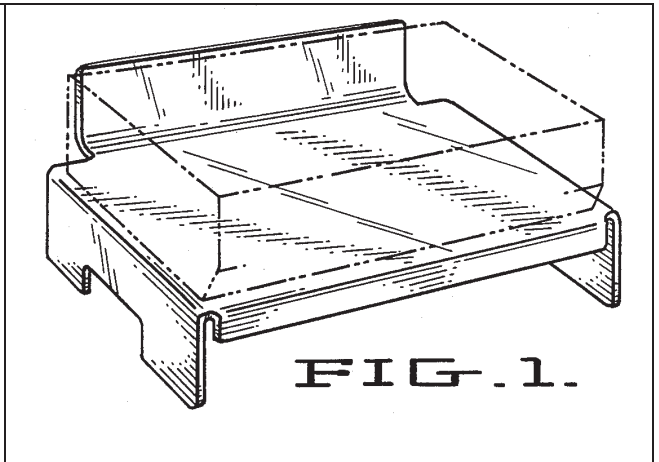
WO 9117906 to Lindahl November 28, 1991	US 4,574,785 to Yamamoto March 11, 1986	US D308,537 to Clark June 12, 1991

68. I note that despite each of these references being publicly available, NONE of them were disclosed to the examiner during the prosecution of the ’843 patent. A POSITA would be motivated to combine these references in accordance with the teachings therein. For example, Lindahl and Yamamoto are both vertically adjustable platforms that use a scissor linkage and piston-cylinder style actuator. They are highly compatible with each other. Yamamoto shows greater vertical adjustability afforded by the ability to lower to a point where the scissor links and actuator are aligned. Combining Yamamoto with Lindahl would allow for greater height adjustability as well as allowing the Lindahl table to store more compactly. When combined, the gas spring of Lindahl will also be aligned with the links as in Yamamoto leading to maximum compactness for storage.

69. A POSITA would further be motivated to combine the base of Yamamoto with the Lindahl mechanism to gain ordinary and well-known advantages. For example, were Lindahl to be used on a delicate surface, its legs would cause concentrated pressure points which could cause unrecoverable depression marks in carpet over time. A POSITA will recognize this fact and be motivated to incorporate the base as taught by Yamamoto which presents a broad base surface. This base surface more evenly distributes the pressure which significantly reduces the potential damage to the supporting floor. This principle is well-known. For example, US patent no. 5,823,492 to Anselmo (circa 1998) states the following:

"When furniture rests on a laid carpet for a period of time, it crushes the pile, the backing and the pad, forming indentations thereon. When the pile gets crushed, it generally can be brushed out to nearly its original form. However, when the backing gets bent, it will not return to its original form. Also, once a pad gets crushed over a period of time, i.e., generally a month or more, it will not come back to its original form. The bent backing and crushed pad will be visible through the carpet pile as indentations or marks marring the pile. Therefore, once furniture is placed on a laid carpet, the furniture cannot be rearranged without leaving indentation and ugly marks visible on the carpet. The only recourse is to either position other furniture over the residual indentation marks or replace the original carpet and pad. Prior art furniture caps attempt to protect carpet pile by distributing the loading caused by a particular piece of furniture over a larger area. However, prior art furniture caps merely make larger residual marks in the backing and pad."[24]

70. As shown above, the use of a broad supportive base to reduce the formation of unrecoverable indentation in surfaces such as carpets is well known. A POSITA would recognize that the legs of Lindahl would present the same wear and tear problem as any other piece of furniture on carpet. As such, a POSITA would be motivated to incorporate a base, such as disclosed by Yamamoto to help distribute these loads and prevent the table from damaging surface it is placed on. A POSITA would be further motivated to combine Clark with the combination of Lindahl in view of Yamamoto as Clark discloses a printer stand which would foreseeably be placed on top of the vertically adjustable platform. It is well-known that a printer stand is not commonly placed alone on the floor. Rather it is customarily placed on an elevated flat surface such as a table, a cabinet, or the like. This allows the printer output to be accessed without having to stoop down.

Challenged Claim '843	
1P. A desktop workspace that adjusts vertically, comprising:	**YES:** While the preamble is generally not considered limiting, both Lindahl and Yamamoto disclose a desktop workspace that adjusts vertically.

[24] US 5,823,492 at 1:20-38

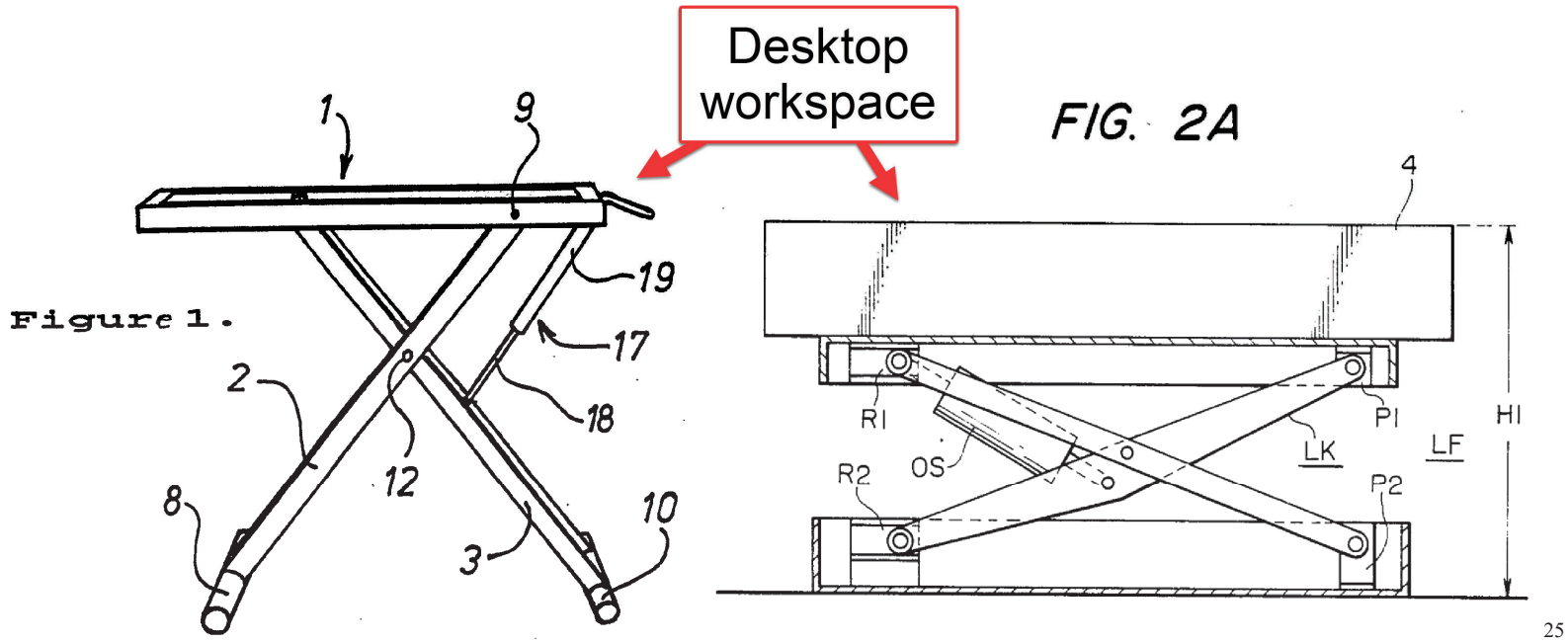

[25]

Lindahl discloses a desktop workspace that adjusts vertically:

"The present invention relates to a table stand for use preferably in caravans and motorhomes, wherein the top of the stand is provided with a frame-like part on which a tabletop is intended to be placed and which is adjustable in the height direction so that the tabletop can be adjusted vertically to different positions." Lindhal, Abstract

A POSITA will understand that scissor lift mechanisms adjust the vertical height of a platform surface such as a desktop workspace. For example, Yamamoto states:

"The conventional fluidized bed has a fixed height. However, there has been a demand for a fluidized bed having an adjustable height, specifically, one in which the height of the bed above the floor can be made as small as possible for ease in transferring a patient onto the bed or when a patient gets onto or off the bed, and placed at a suitable height when the patient is lying on the bed for administering treatment to the patient." Yamamoto 1:53-60

[25] Lindhal, Figure 1 and Yamamoto, Figure 2A, Annotated

As shown above, Yamamoto describes a vertically adjustable workspace platform (a patient support platform in this case). A POSITA would readily recognize that the Yamamoto vertical adjustment mechanism could be used for a wide variety of applications, as scissor lift mechanisms are extremely common and well-known. It is helpful to ascertain the plain and ordinary meaning and scope of "desktop workspace" considering the common dictionary definitions as shown below: Desktop: the top of a desk[26] Desk: A table, counter, or booth at which specified services or functions are performed[27] Workspace: An area used or allocated for one's work, as in an office.[28] The usage of the term desktop workspace within the '843 patent is consistent with the plain and ordinary meaning of the words from which this compound term is composed. For example, the desktop workspace in the '843 patent is described as having a top surface at which an operator stands to perform their work.[29] In just the same way, Yamamoto discloses a work surface in the form of a bed on a table at which an operator stands to perform their work. Similarly, Lindahl discloses a desk surface which is a dedicated space allocated for one's work should they so choose.	
1a. a work surface platform;	**YES:** Both Lindahl and Yamamoto disclose a work surface platform.

[26] <https://www.ahdictionary.com/word/search.html?q=desktop> accessed Dec 29, 2024
[27] <https://www.ahdictionary.com/word/search.html?q=desk> accessed Dec 29, 2024
[28] <https://www.ahdictionary.com/word/search.html?q=workspace> accessed Dec 29, 2024
[29] '843 patent 1:33-66

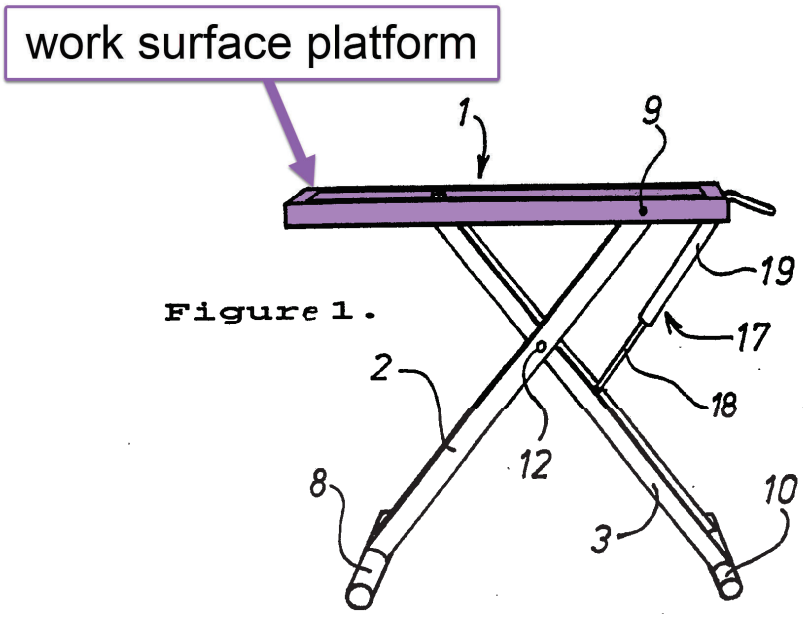

[30]

*"The present invention relates to a table stand intended for use preferably in caravans and motorhomes, wherein the stand supports at the top thereof a frame-like part on which a tabletop is intended to be placed… **Firstly the table is intended for use as a conventional dining table**…" Lindahl 1:3-6, 13-14 (emphasis added)*
"The stand includes a frame-like part 1 which is carried by two leg members 2, 3." Lindahl 3:1-3

As shown above, Lindahl describes a work surface platform that is intended to be used as a work surface platform. A POSITA will understand that a dining table is perfectly suitable for use as a work surface, and that it is common for dining tables to be used for other types of work.

Yamamoto also discloses a work surface platform as shown below:

[30] Lindahl, Figure 1, annotated

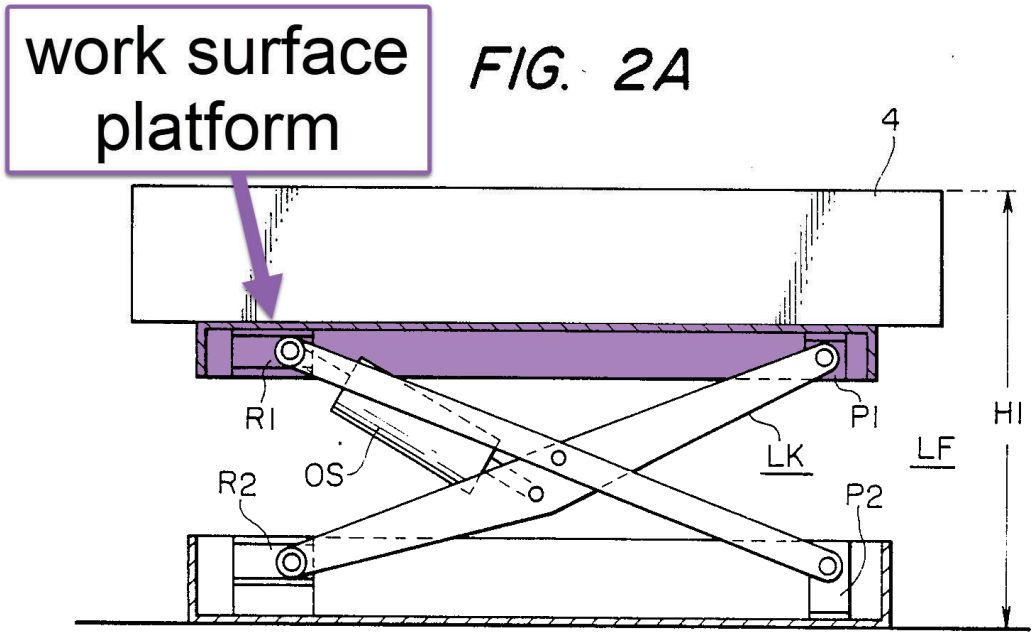

[31]

"The conventional fluidized bed has a fixed height. However, there has been a demand for a fluidized bed having an adjustable height, specifically, one in which the height of the bed above the floor can be made as small as possible for ease in transferring a patient onto the bed or when a patient gets onto or off the bed, ***<u>and placed at a suitable height when the patient is lying on the bed for administering treatment to the patient.</u>***" *Yamamoto 1:53-60 (emphasis added)*

As shown above, Yamamoto discloses a platform for supporting a patient. A POSITA will understand that this is a platform where doctors and nurses perform work on patients, which is clearly an example of a work surface platform.

1b. a platform element sitting on the work surface platform, the platform element including an elevated platform surface above the work surface platform;	**YES:** Lindahl in view of Yamamoto, and in further view of Clark discloses a platform element sitting on the work surface platform, the platform element including an elevated platform surface above the work surface platform.

A POSITA would easily recognize that a platform element can be placed on a work surface platform. For example, Lindahl teaches that the table may be used as a dining table. Plates, placemats, and other common accoutrements of dining are all platform elements that are ordinarily placed

[31] Yamamoto Fig 2A, annotated

on dining tables. It is fair to say that one of a dining table's most important functions is to provide a surface on which other items can be placed. In addition to this, Clark discloses a platform element specifically as an option for being placed on another surface such as a desk, dining table, or the like.

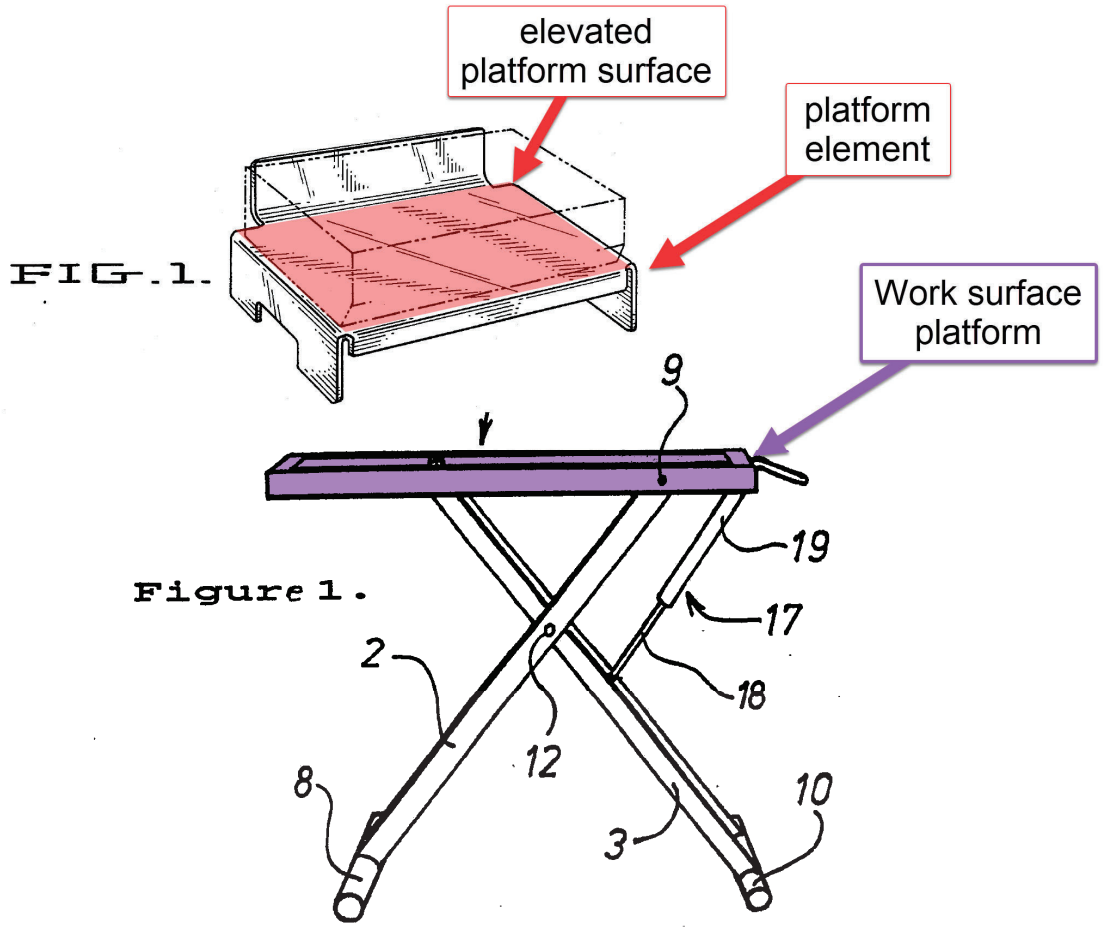

[32]

As discussed previously, Clark discloses an elevated platform surface configured to be placed on another surface. Specifically, Clark states:

[32] Clark Figure 1, and Lindahl Figure 1, combined and annotated

"The ornamental design for a computer printer stand, as shown and described." Clark, pg. 1 A POSITA would understand that a printer stand is commonly placed on another surface such as a desktop, table or the like. When this is done, the printer stand of Clark will include an elevated platform surface above the work surface platform. A POSITA will recognize that this elevated platform surface is configured to support a printer or other electronic device or any suitable object placed thereon. Though possible, it would be atypical to merely place a small printer stand, such as disclosed by Clark, on the floor as this would still require users to stoop in order to interact with the printer. A POSITA will be familiar with the purpose of using a small printer stand such as disclosed by Clark, which is to elevate the printer so as to to provide easier access to printed papers it dispenses. That a printer stand such as Clark is on par with the size of a small printer make it less expensive and more versatile as an end user has greater optionality as to where to put it.	
1c. a base configured to sit on an existing platform; and	**YES:** Both Lindahl and Yamamoto disclose a base configured to sit on an existing platform.

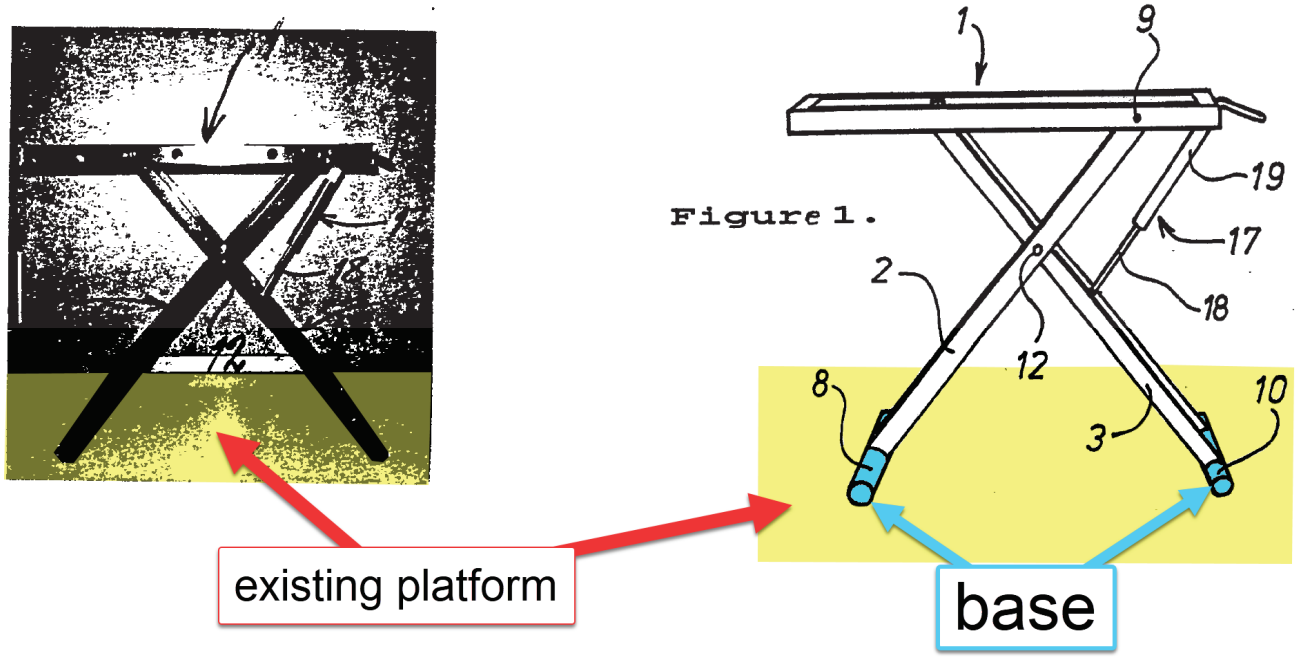

[33]

As shown previously, Lindahl discloses a work surface platform that is configured to be used in caravans and motorhomes.

[33] Lindahl cover page and Figure 1, combined and annotated

*"The present invention relates to **a table stand intended for use preferably in caravans and motorhomes**, wherein the stand supports at the top thereof a frame-like part on which a tabletop is intended to be placed… Firstly the table is intended for use as a conventional dining table…" Lindahl 1:3-6, 13-14 (emphasis added)*

*"Each leg member 2, 3 includes two substantially parallel rods or bars 4, 5; 6, 7, wherein the two bars of each pair of bars are spaced from one another and are connected together at both ends thereof by means of a respective transverse rod 8, 9; 10, 11, wherein **the lowermost transverse rods 8; 10 function to support the stand against the underlying support surface**…" Lindahl 3:3-10 (emphasis added)*

A POSITA will recognize that the floor of a caravan or motorhome is an existing platform on which the desk is taught to be used. The floor of a caravan or motorhome is typically a large flat surface consistently held at a height elevated from the ground. Lindahl also has a base in the form of transverse rods 8 and 10. The base supports the stand against the underlying support surface (i.e. existing platform).

Yamamoto also discloses a base configured to sit on an existing platform.

FIG. 2A

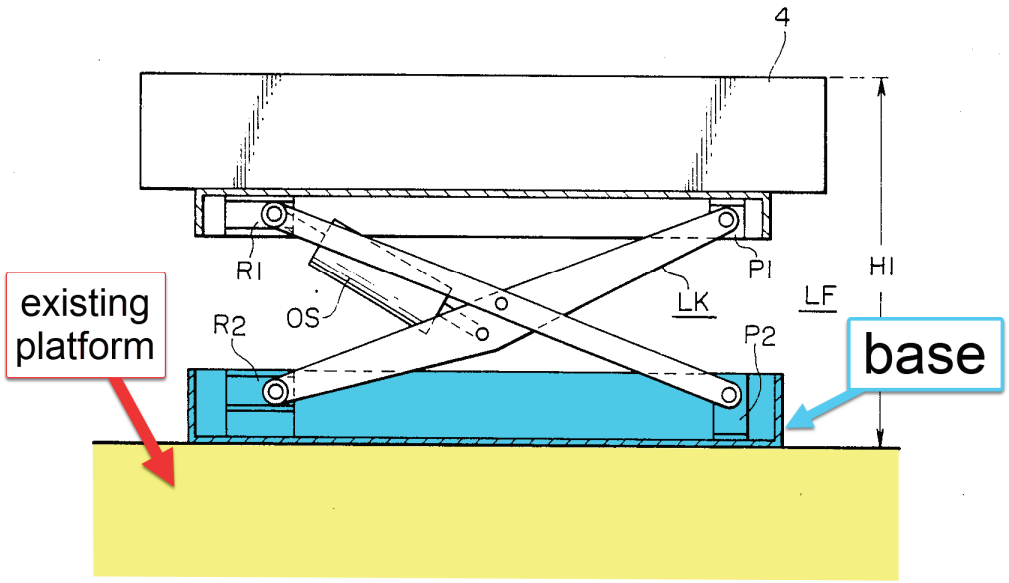

[34]

*"The conventional fluidized bed has a fixed height. However, there has been a demand for a fluidized bed having an adjustable height, specifically, **one in which the height of the bed above the floor can be made as small as possible** for ease in transferring a patient onto the bed*

[34] Yamamoto Figure 2A, annotated

or when a patient gets onto or off the bed, and placed at a suitable height when the patient is lying on the bed for administering treatment to the patient." Yamamoto 1:53-60 (emphasis added)

As shown, above, Yamamoto discloses a base which supports the Yamamoto mechanism on the floor, i.e. an existing platform. Whether the floor is the foundation of a base floor or a floor several stories up, a POSITA will easily recognize that a floor is an existing platform.

1d. a height adjustment mechanism connecting the work surface platform and the base, the height adjustment mechanism including:	**YES:** Both Lindahl and Yamamoto disclose a height adjustment mechanism connecting the work surface platform and the base.

The Lindahl mechanism uses a combination of a scissor linkage and a locking gas spring to serve as a height adjustment mechanism. The height adjustment mechanism connects the work surface platform to the base

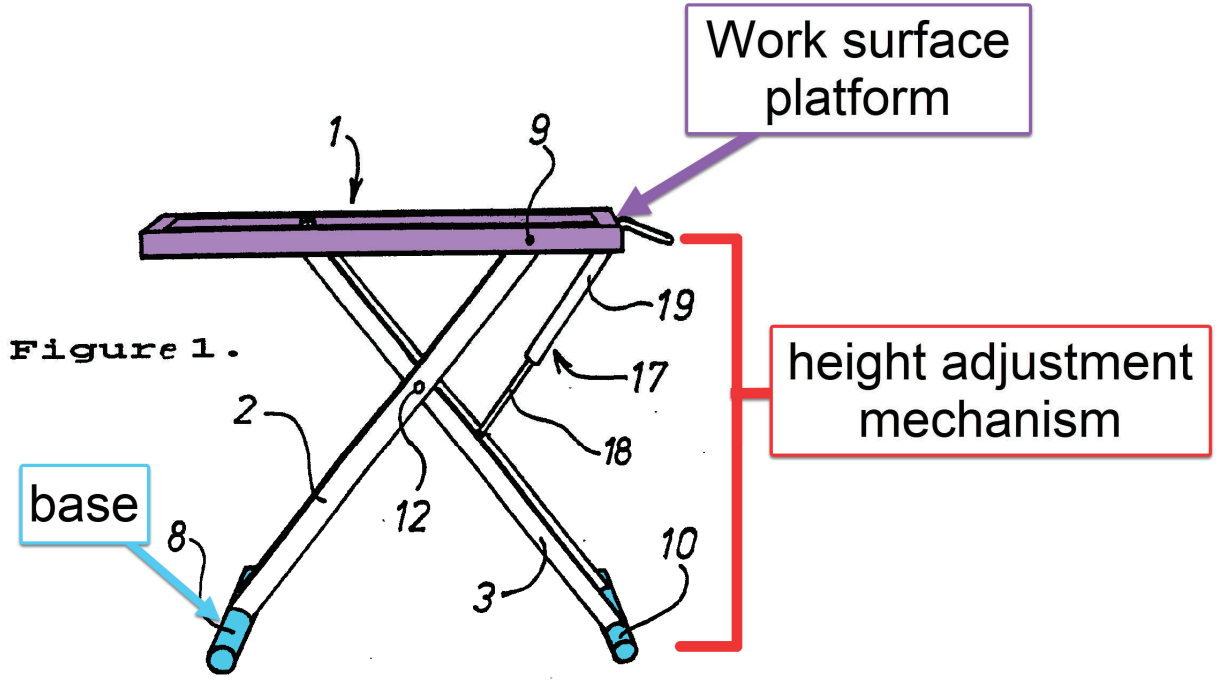

[35]

"A gas-spring, or piston-cylinder device, so arranged in the stand ***as to enable the frame-like part of said stand to be adjusted vertically, both downwardly and upwardly****, wherein the gas-spring can be blocked in its position, so as to maintain the position of the frame-like part and therewith the position of the*

[35] Lindahl Figure 1, annotated

tabletop in relation to the underlying supporting surface. This enables the frame-like part, and therewith the tabletop, to be adjusted continually to any selected vertical position, in which position the gas-spring is locked." Lindahl 2:12-22 (emphasis added)

"The stand includes at least two leg members which are hinged or pivotally connected together such as to enable the parts of said leg members located on mutually opposite side of the hinge or pivot to be moved towards and away from one another in a scissor-like fashion." Lindahl 1:30-35

Yamamoto also discloses a height adjustment mechanism:

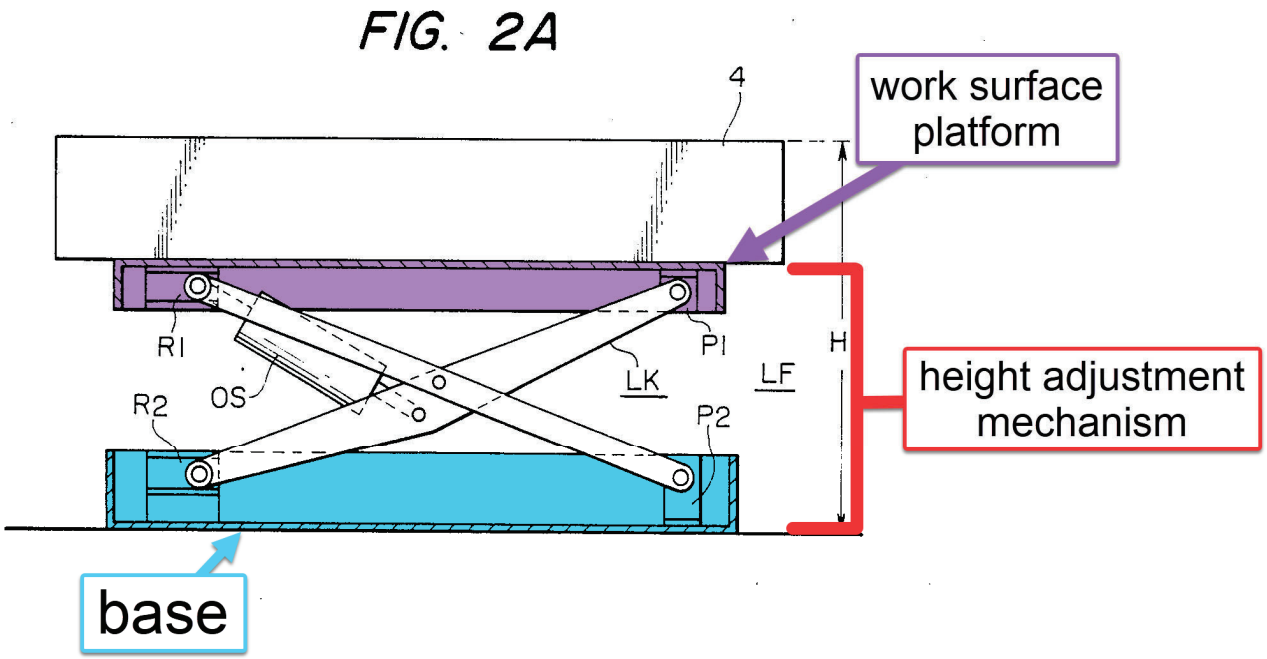

[36]

*"**FIG. 2 illustrates the arrangement of such a mechanism for producing vertical movement.** **The height of the fluidized bed, and hence the height of the tank 4, are freely adjustable** by a lifter LF between a maximum height H1 and a minimum height H2. The lifter LF includes a link mechanism LK having bearings P1 and P2 fixed to ends thereof and rollers R1 and R2 on opposite ends thereof which are movable along a guide rail." Yamamoto 1:63-2:3 (emphasis added)*

[36] Yamamoto Figure 2A, annotated

As shown above, both Lindahl and Yamamoto disclose a height adjustment mechanism that connects the work surface platform and the base. A POSITA will recognize that both Lindahl and Yamamoto use a scissor linkage in combination with a cylinder style force actuator and that the height adjustment mechanism of Yamamoto could be used in the Lindahl mechanism and vice versa.	
1d1. a first set of pivot arms that connect at a scissoring pivot point creating a scissoring motion when raising and lowering the work surface platform to various heights;	**YES:** Both Lindahl and Yamamoto have a first set of pivot arms that connect at a scissoring pivot point creating a scissoring motion when raising and lowering the work surface platform to various heights.

The pivot arms below are part of the height adjustment mechanism of Lindahl:

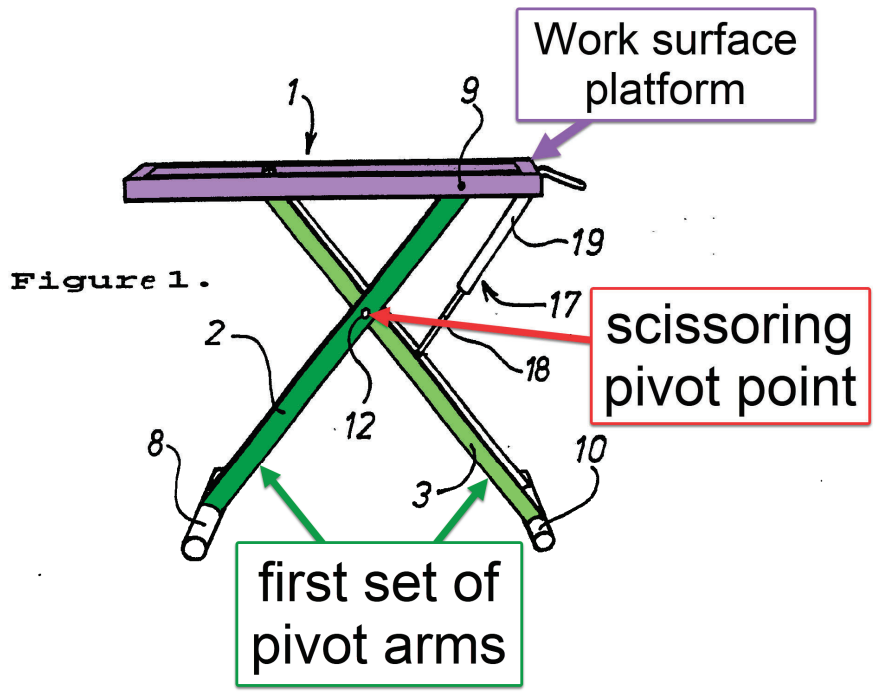

[37]

"Figures 1 and 2 illustrate the inventive stand. The stand includes a frame-like part 1 which is ***carried by two leg members 2, 3****. … **The two leg members 2, 3**, i.e. the pairs of bars 4, 5; 6, 7 **are mutually connected by means of a hinge means or pivot in the form of a transverse rod 12**, which extends through the bars approximately midway therealong the rods, preferably at a location which is slightly above centre. **This enables***

[37] Lindahl Figure 1, annotated

the two ends of respective pairs of bars 4, 5; 6, 7 to be moved towards and away from each other in a scissor-like fashion and therewith move the frame-like part 1 vertically." *(Lindahl 3:1-3, 11-20, emphasis added)*

"The present invention relates to a table stand for use preferably in caravans and motorhomes, wherein the top of the stand is provided with a frame-like part on which a tabletop is intended to be placed and which is ***adjustable in the height direction so that the tabletop can be adjusted vertically to different positions****." Lindhal, Abstract (emphasis added)*

As shown above, Lindahl has a first set of pivot arms, items 2 and 3 above. These legs connect at a scissoring pivot point at pin 12. Together, these legs and pin create a scissoring motion when raising and lowering the work surface to various heights.

Yamamoto also discloses a first set of pivot arms that connect at a scissoring pivot point creating a scissoring motion when raising and lowering the work surface platform to various heights. For example, the pivots arms and scissoring pivot point are shown below:

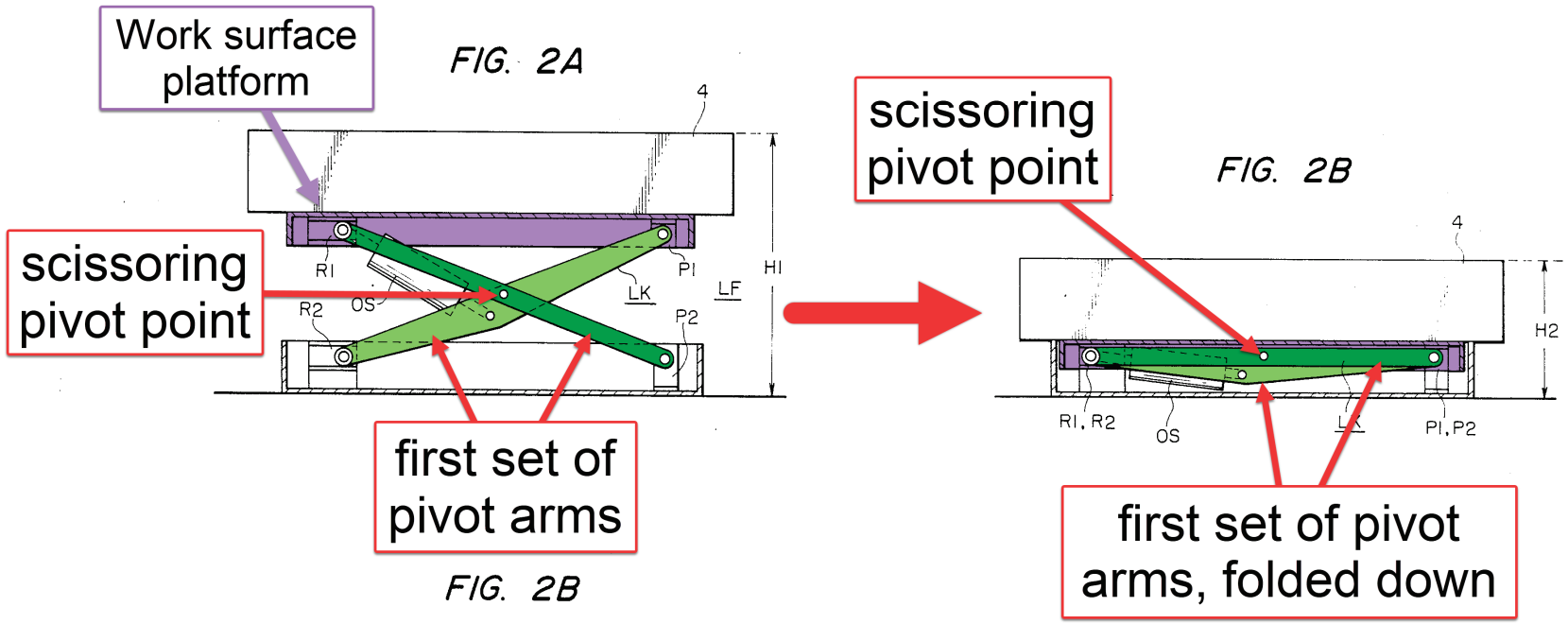

[38]

"FIG. 2 illustrates the arrangement of such a mechanism for producing vertical movement.

[38] Yamamoto Figures 2A and 2B, combined and annotated

The height of the fluidized bed, and hence the height of the tank 4, are freely adjustable by a lifter LF between a maximum height H1 and a minimum height H2. The lifter LF includes a link mechanism LK having bearings P1 and P2 fixed to ends thereof and rollers R1 and R2 on opposite ends thereof which are movable along a guide rail." Yamamoto 1:63-2:3

As shown above, Yamamoto discloses a first set of pivot arms (the arms that are part of link mechanism LK). These are connected in a linkage making a scissor mechanism which is used to lift the patient bed and to set it at various heights. As the lifting mechanism is moved up and down, the pivot arms move with a scissoring motion. Between Figures 2A and 2B the same mechanism is shown in two different states of lift. By comparing the positions of the pivot arms, it can clearly be seen that scissoring motion takes place to move the lift mechanism from the position shown in Figure 2A to the position shown in Figure 2B.

A POSITA would understand that scissor mechanisms are suitable for vertical lifting applications such as Lindahl and Yamamoto. Scissor mechanisms are well-known and are very commonly built with two sets of pivots arms.

1d2. a second set of pivot arms;	**YES:** At least Lindahl discloses a second set of pivot arms.

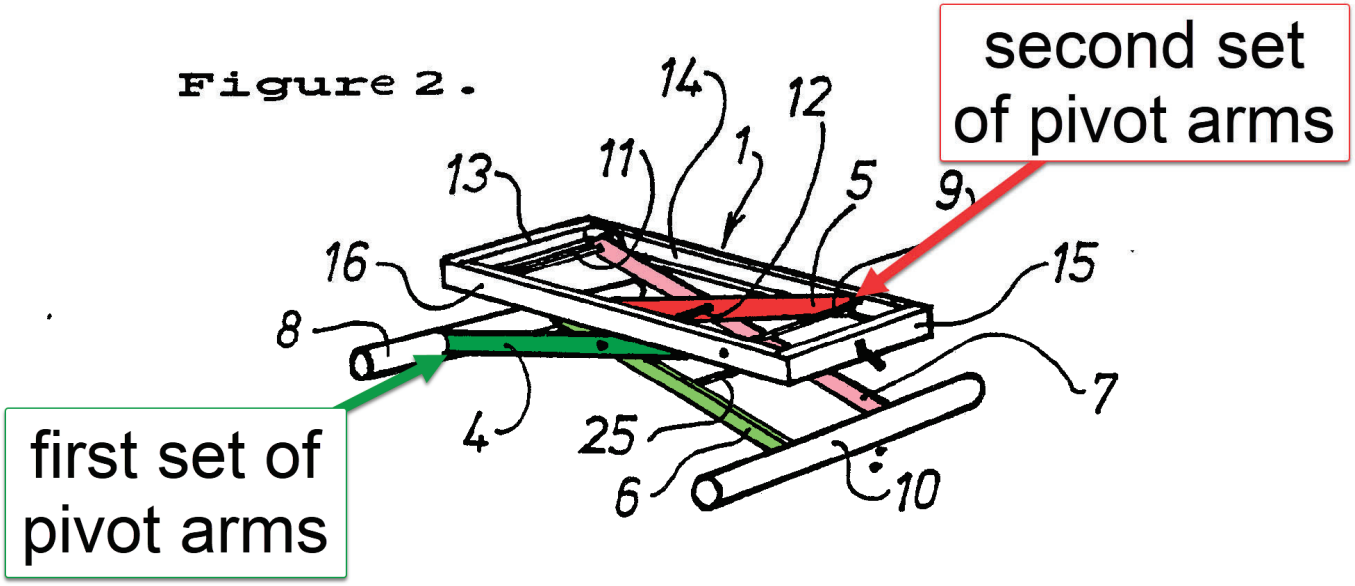

[39]

[39] Lindahl Figure 2, annotated

"…The pairs of bars 4, 5; 6, 7 are mutually connected by means of a hinge means or pivot in the form of a transverse rod 12, which extends through the bars approximately midway therealong the rods, preferably at a location which is slightly above centre. This enables ***the two ends of respective pairs of bars 4, 5; 6, 7 to be moved towards and away from each other in a scissor-like fashion and therewith move the frame-like part 1 vertically.****" Lindahl 3:12-20 (emphasis added)*

As shown above Lindahl has a first and a second set of pivot arms. They are connected to each other and move in a scissor-like fashion. A POSITA will understand that this is a scissor lift mechanism of typical and ordinary design. A POSITA will further understand and be familiar with the fact that scissor lift mechanisms such as a common scissor lift machine or even this small table as disclosed by Lindahl are commonly built with a pair of scissoring links. This provides lateral stability to the machine over what would be typical of a single set of scissoring links. As such, although Yamamoto doesn't explicitly show a second set of pivot arms in its figures, a POSITA will understand that it is very common for a second set of arms to be included.

1d3. an element that connects the first set of pivot arms to the second set of pivot arms;	**YES:** At least Lindahl discloses an element that connects the first set of pivot arms to the second set of pivot arms.

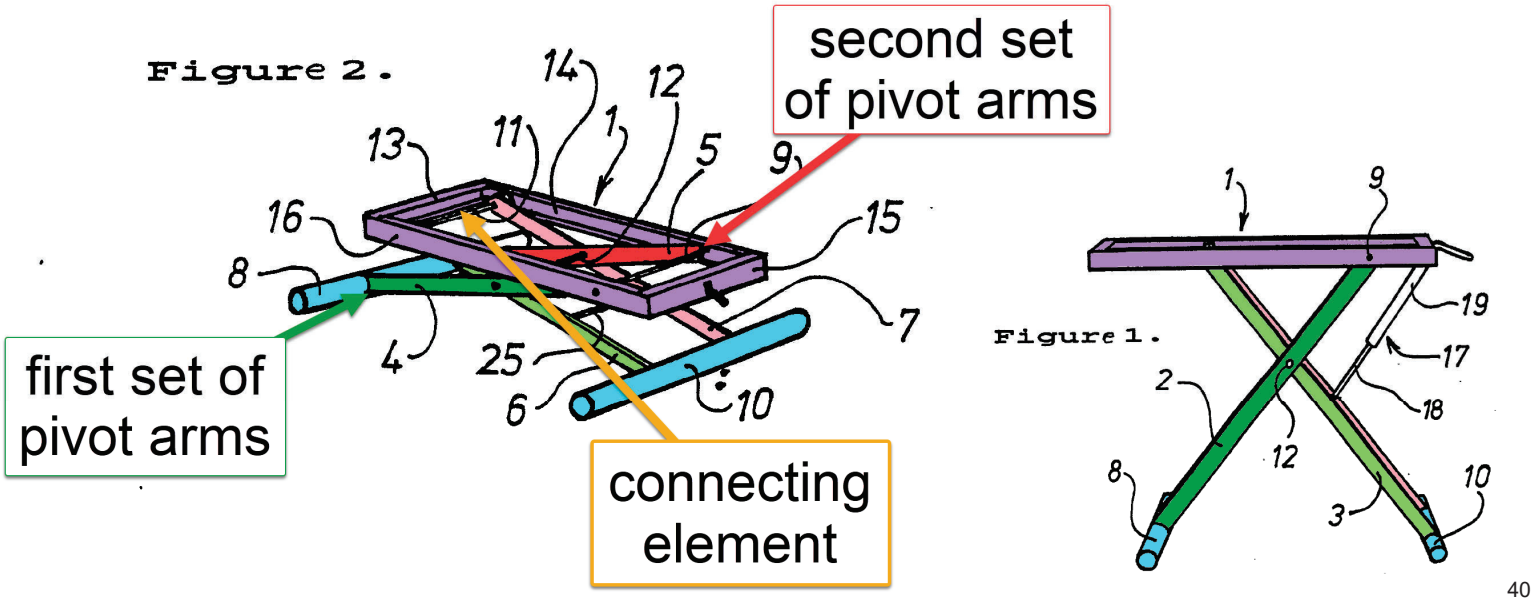

[40]

"…The pairs of bars 4, 5; 6, 7 are mutually connected by means of a hinge means or pivot in the form of a transverse rod 12, which extends through the bars approximately midway therealong the rods, preferably at a location which is slightly above centre. This enables the two ends of

[40] Lindahl Figure 1 and 2, combined and annotated

respective pairs of bars 4, 5; 6, 7 to be moved towards and away from each other in a scissor-like fashion and therewith move the frame-like part 1 vertically." Lindahl 3:12-20 *"Each leg member 2, 3 includes two substantially parallel rods or bars 4, 5; 6, 7, **wherein the two bars of each pair of bars are spaced from one another and are connected together at both ends thereof by means of a respective transverse rod 8, 9; 10, 11**; wherein the lowermost transverse rods 8; 10 function to support the stand against the underlying support surface …" Lindahl 3:3-10 (emphasis added)* As shown above, Lindahl discloses multiple elements that connects the first set of pivot arms to the second set of pivot arms. For example, transverse rod 11 connects the first and second set of pivot arms to each other. Further, transverse rod 12 extends between the sets of pivot arms, connecting them. Further the top frame (item 1) and associated pivots also connect the first and second scissor linkages to each other. Further still, the transverse rods 8, and 10 of Lindahl connect the first set of pivot arms to the second set of pivot arms. A POSITA will understand that this is typical and ordinary design for scissor lift mechanisms and any one of these components are elements that connect the first set of pivot arms to the second set of pivot arms.	
1d4. a base pivot point fixed relative to the base and connecting the base and the first set of pivot arms;	**YES:** Lindahl in view of Yamamoto discloses a base pivot point fixed relative to the base and connecting the base and the first set of pivot arms.

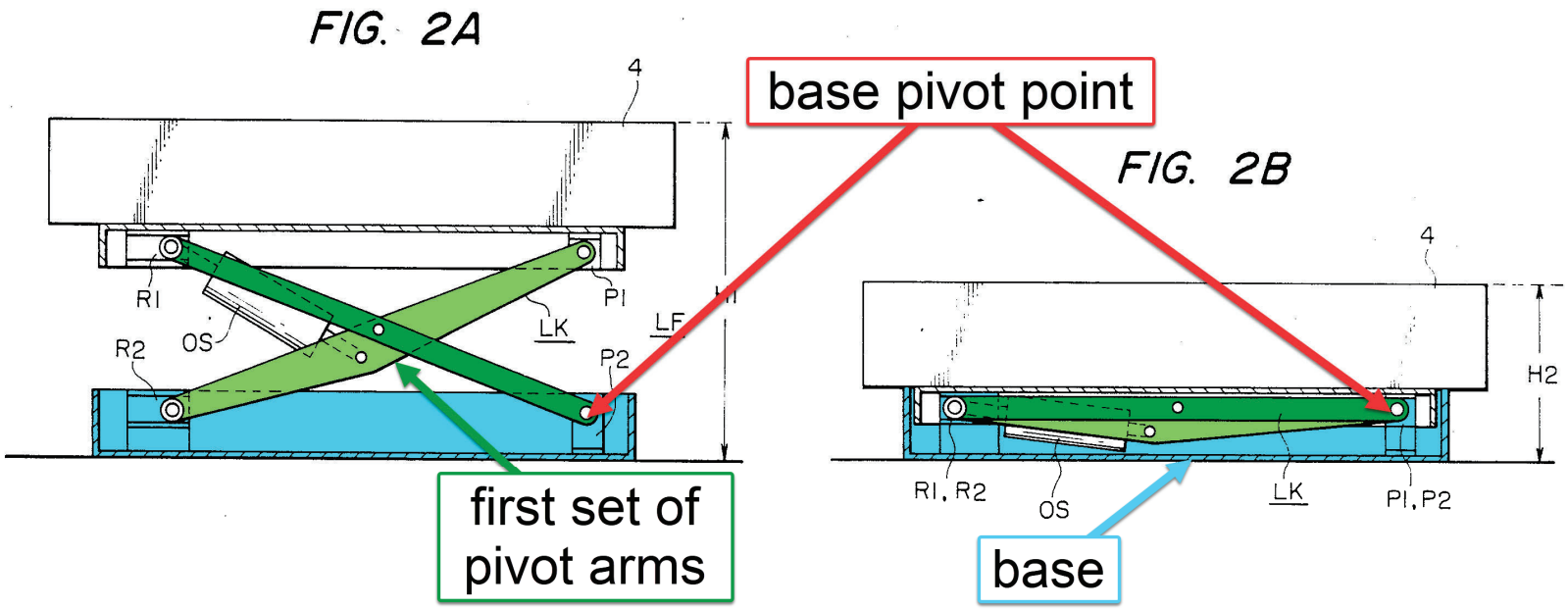

[41]

"FIG. 2 illustrates the arrangement of such a mechanism for producing vertical movement. The height of the fluidized bed, and hence the height of the tank 4, are freely adjustable by a lifter LF between a maximum height H1 and a minimum height H2. ***<u>The lifter LF includes a link mechanism LK having bearings P1 and P2 fixed to ends thereof</u>*** *and rollers R1 and R2 on opposite ends thereof which are movable along a guide rail." Yamamoto 1:63-2:3 (emphasis added)*

As shown above, Yamamoto discloses a base pivot point which connects the base and the first set of pivot arms. A POSITA will understand that this is ubiquitous with scissor lift mechanism design. It is a required part of any scissor lift mechanism that is fixed to a base as it is one of the main supports for the entire lift mechanism. Thus, Lindahl in view of Yamamoto would include this pivot point as is so typical in design.

1d5. a platform pivot point fixed relative to the work surface platform and connecting the work surface platform and the first set of pivot arms;	**YES:** Both Lindahl and Yamamoto have a platform pivot point fixed relative to the work surface platform and connecting the work surface platform and the first set of pivot arms.

[41] Yamamoto Figures 2A and 2B, combined and annotated

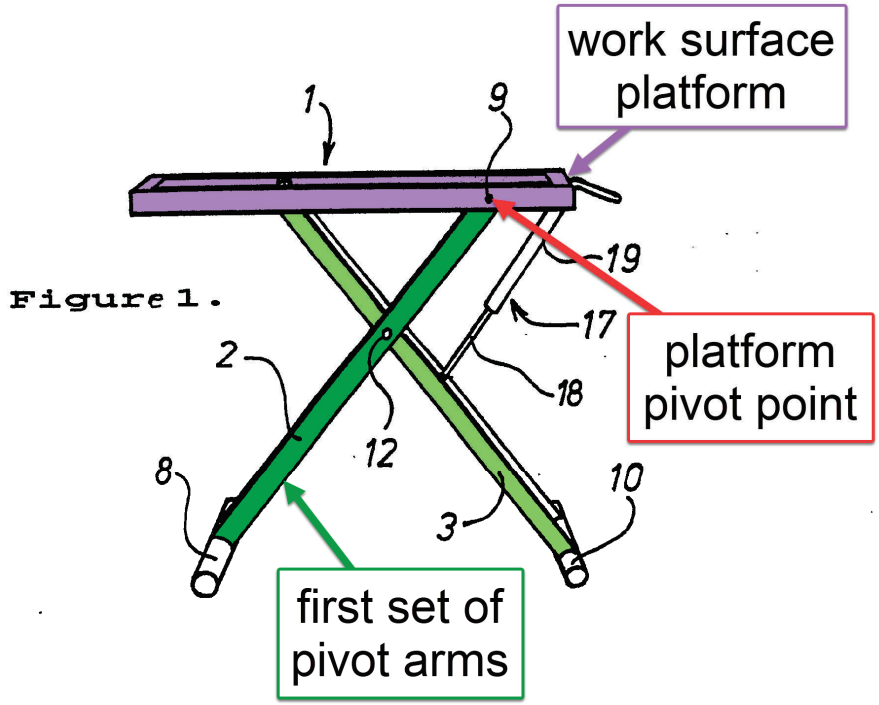

[42]

"Each leg member 2, 3 includes two substantially parallel rods or bars 4, 5; 6, 7, wherein ***<u>the two bars of each pair of bars are spaced from one another and are connected together at both ends thereof by means of a respective transverse rod 8, 9; 10, 11</u>****, wherein the lowermost transverse rods 8; 10 function to support the stand against the underlying support surface and wherein the upper, transverse rods 9; 11 are intended to coact with the frame-like part 1." Lindahl 3:3-11 (emphasis added)*

As shown in the figure and citation above, Lindahl discloses transverse rod 9 which is a platform pivot point fixed relative to the work surface platform which connects the work surface platform to a first set of pivots arms. A POSITA will recognize that this design layout is universally used with scissor lift mechanisms. It is ubiquitous and well-known and therefore not inventive. Lindahl simply provides yet one more example of this design layout.

[42] Lindahl Figure 1, annotated

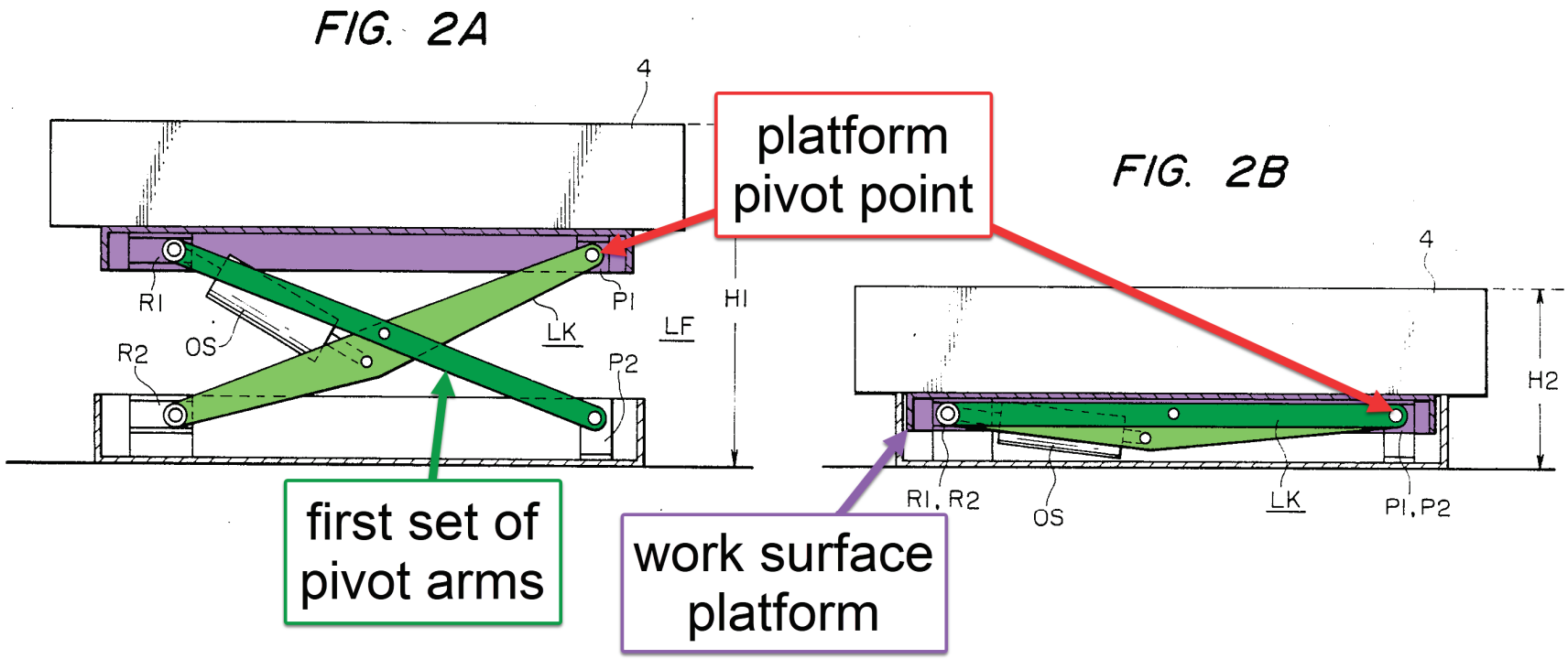

[43]

*"The lifter LF includes a link mechanism **LK having bearing P1 and P2 fixed to ends thereof** and rollers R1 and R2 on opposite ends thereof which are movable along a guide rail" Yamamoto 1:68-2:3 (emphasis added)*

As shown in the figure above, Yamamoto also discloses a platform pivot point as element P1 shown above. As discussed previously, this platform pivot point is ubiquitous in scissor lift linkage design. Yamamoto and Lindahl both disclose it and a POSITA would understand this pivot point exists merely by knowing that a scissor lift mechanism is involved in the design.

1d6. a sliding mechanism on an end of an arm of the first set of pivot arms between the end of the arm and either the work surface platform or the base;	**YES:** Both Lindahl and Yamamoto disclose a sliding mechanism on an end of an arm of the first set of pivot arms between the end of the arm and either the work surface platform or the base.

[43] Yamamoto Figure 2A and 2B, combined and annotated

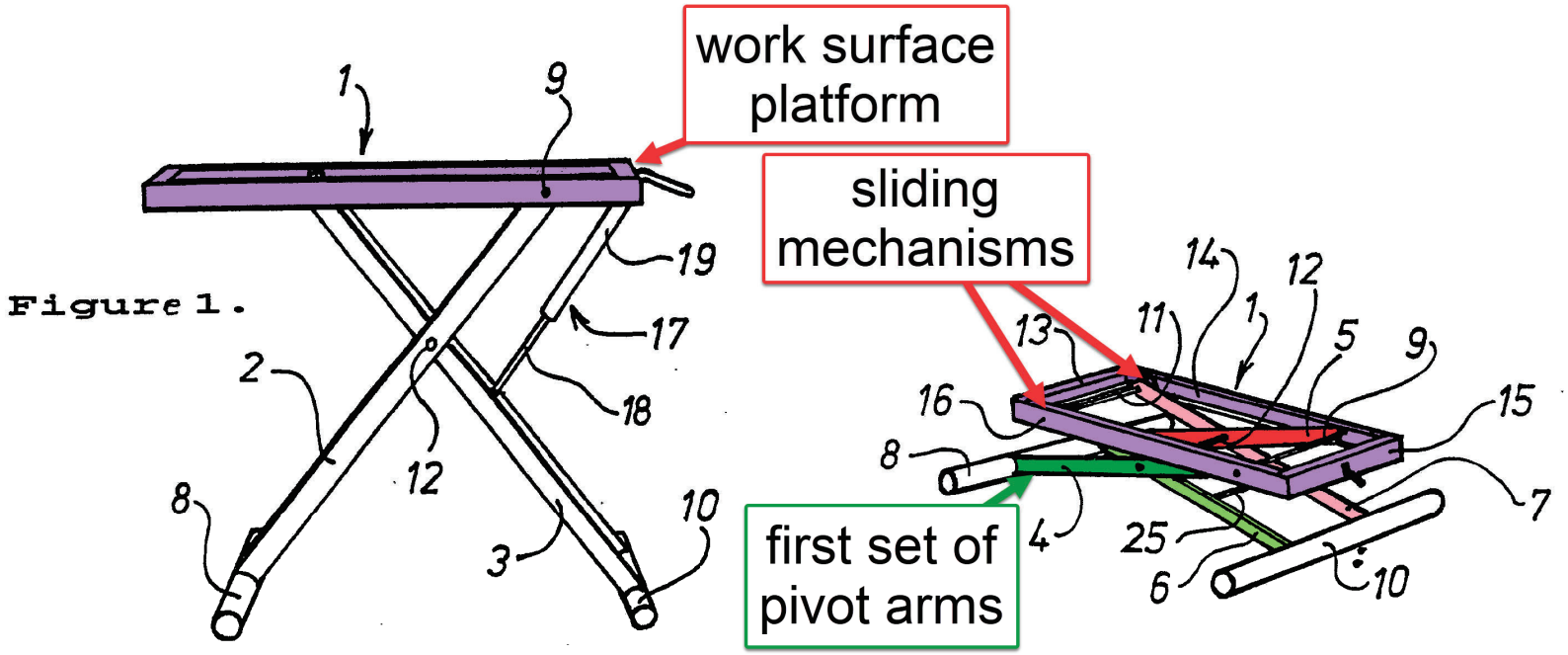

44

"The one rod 9 is pivotally mounted in the bars 14, 15, whereas the other ***transverse rod 11 is provided at both ends with suitable means for sliding in the U-shaped part of the bars*** *in order to achieve the aforesaid scissor-like movement of the leg members." Lindahl 3:31-4:3 (emphasis added)*

As shown above, Lindal discloses a sliding mechanism on the end of the pivot between the first set of pivot arms and the work surface platform. As will be shown later in the claim language, the term "sliding mechanism" must be interpreted to include rolling contact for example claim element 11a of the '843 patent reads, "wherein the sliding mechanism includes a wheel mounted on the end of the arm of the first set of pivot arms." A POSITA would understand that a wheel is used for rolling contact which is typically considered different from sliding contact. Nevertheless, a POSITA would understand that scissor linkages can are often are made with rolling OR sliding contact and they function just the same. The only difference is that sliding contact has more drag than rolling contact. This drag is commonly minimized for example through the use of low friction wear pad materials. For example, the Pop Up brand Push Pro scissor lift (available at least as early as July 2014) uses a sliding contact at the movable pivot of a scissor lift as opposed to a roller.[45]

[44] Lindahl Figure 1 and 2, combined and annotated
[45] See Operators Manual - Pop Up - Push Pro.pdf, cover page, and Figures 8.14 and 8.15

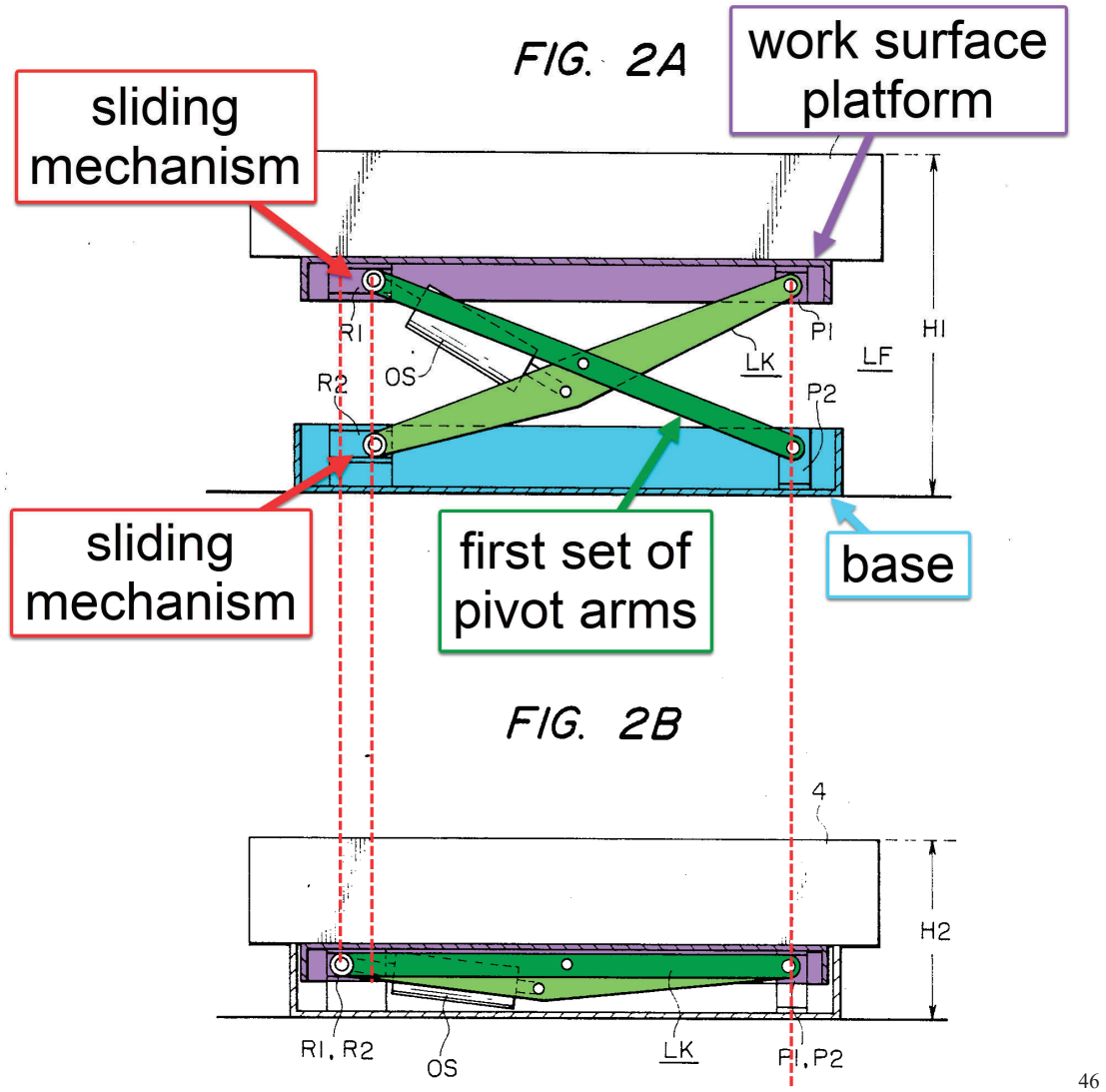

[46]

[46] Yamamoto Figures 2A and 2B, combined and annotated

"The lifter LF includes a link mechanism LK having bearing P1 and P2 fixed to ends thereof and rollers R1 and R2 on opposite ends thereof which are movable along a guide rail" Yamamoto 1:68-2:3

As shown in the figure above, Yamamoto also discloses a set of rollers R1 and R2 which allow for what the '843 patent considers to be sliding (i.e. translating) movement as is well-known and ubiquitous in the design of a common scissor lift linkage. It is kinematically necessary as a part of the design of a scissor lift linkage to allow these pivot points to move in this way. Were these pivot points not permitted to move in this manner, the scissor linkage would not be able to move at all. Yamamoto discloses an extremely common arrangement where these pivot points translate both in the top and the bottom. That is to say between the scissor links and the work surface platform as well as between the scissor links and the base. As discussed previously, in the combination of Lindahl in view of Yamamoto, the base of Yamamoto would be used. As such, these translating rollers will be present in the combination both in the work surface platform as well as in the base.

1d7. a gas spring that assists in elevation of the work surface platform by applying a force to one of the first set of pivot arms as part of the scissoring motion,	**YES:** Lindahl discloses a gas spring that assists in the elevation of the work surface platform by applying a force to one of the first set of pivot arms as part of the scissoring motion.

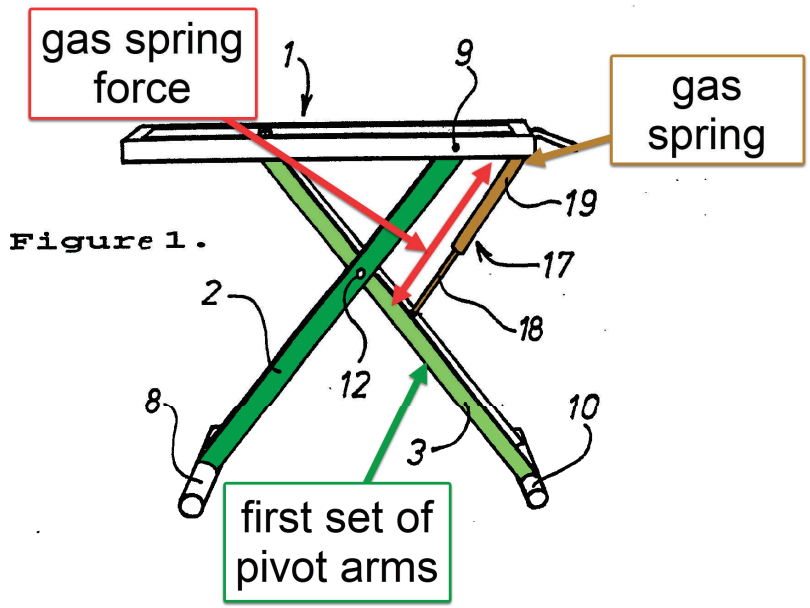

[47]

[47] Lindahl Figure 1, annotated

"An essential feature of the invention is that a blockable gas-spring 17, or piston-cylinder device is provided for enabling the position of the frame-like part 1 to be adjusted vertically in a smooth continuous fashion, both in an upward and in a downward direction. ***The gas-spring includes a bottom part 18 which is pivotally connected to the leg member 3*** *beneath the pivot rod 12, and an upper part 19 which is pivotally connected to the transverse frame-bar 15 on the same side of a vertical plane passing through the rod 12 as the lower part 18 (see also Figures 3, 4)." Lindahl 4:5-15 (emphasis added)* As shown in the figure and the citation above, Lindahl discloses a gas spring that is used to facilitate the movement of the scissor linkage and therefore work surface platform. As shown above, the gas-spring of Lindahl is connected between the work surface platform and the pivot arms. As such, it applies force to the pivot arms as well as the work surface platform as part of the scissoring motion. I further note that Lindahl provides yet another teaching of the interchangeability of a gas-spring and a hydraulic cylinder. As shown in the citation above, Lindhal states, "a blockable gas-spring 17, or piston-cylinder device." A POSITA would understand that a lockable gas-spring is a piston cylinder device. A POSITA would also understand that a hydraulic or pneumatic cylinder is a piston-cylinder device. Thus, the Yamamoto mechanism also shows a piston-cylinder device between the work surface platform and the pivoting links[48] as is well-known in the typical and ordinary design of scissor lift mechanisms. A POSITA would understand that the hydraulic cylinder of Yamamoto could be replaced with a gas spring. This would change the Yamamoto device from an actively driven scissor lift to an assisted but manually driven scissor lift.	
1d8. wherein one end of the gas spring is fixed to the work surface platform, and wherein the gas spring acts as a locking device that holds the work surface platform at various vertical heights above the base; and	**YES:** Lindahl discloses that one end of the gas spring is fixed to the work surface platform, and wherein the gas spring acts as a locking device that holds the work surface platform at various vertical heights above the base.

[48] See Yamamoto Figure 2A element OS which is connected to R1 and LK.

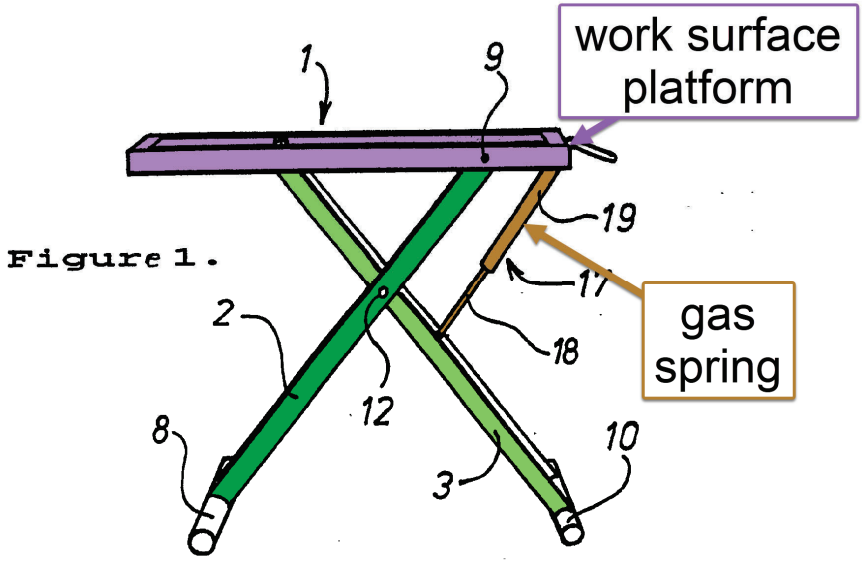

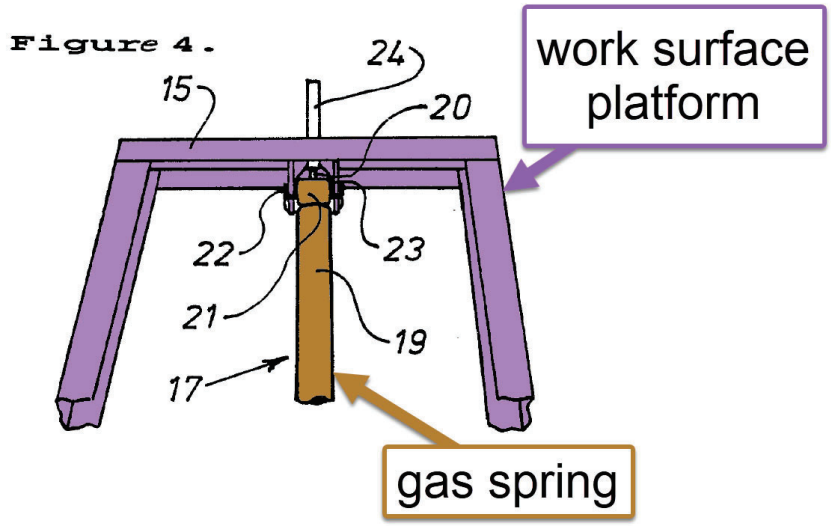

[49]

*"**<u>An essential feature of the invention is that a blockable gas-spring 17, or piston-cylinder device is provided</u>** for enabling the position of the frame-like part 1 to be adjusted vertically in a smooth continuous fashion, both in an upward and in a downward direction. The gas-spring includes a bottom part 18 which is pivotally connected to the leg member 3 beneath the pivot rod 12, **<u>and an upper part 19 which is pivotally connected to the transverse frame-bar 15</u>** on the same side of a vertical plane passing through the rod 12 as the lower part 18 (see also Figures 3, 4)." Lindahl 4:5-15 (emphasis added)*

As shown above, Lindahl discloses the use of a gas spring to facilitate the movement of the scissor linkage. Specifically, the gas-spring cited is a locking gas-spring which, as discussed previously, is a well-known off-the-shelf component that any POSITA would be very familiar with. As Lindahl describes, the locking gas spring is used to set the work surface platform at various heights in ordinary usage of the Lindahl apparatus. As discussed previously, Lindhal describes that any piston-cylinder actuator (an example of which is a locking gas spring) can be used with their machine. A POSITA will understand that a hydraulic cylinder, such as used by Yamamoto is also a piston cylinder device that can be used to lock the vertical position of the platform at any height within its ordinary range of motion. The hydraulic cylinder of Yamamoto (item OS[50]) is a piston-cylinder device that is attached to the roller that engages with the work surface platform on one end as can be clearly seen in view 2A of Yamamoto. A POSITA would understand that the hydraulic cylinder of Yamamoto could be replaced with a locking gas spring as described in this claim element.

[49] Lindahl Figures 1 and 4, combined and annotated
[50] Yamamoto 2: 3

1d9. a handle that unlocks the locking device in response to pressure applied by a user.	**YES:** Lindahl in view of Yamamoto discloses a handle that unlocks the locking device in response to pressure applied by a user.

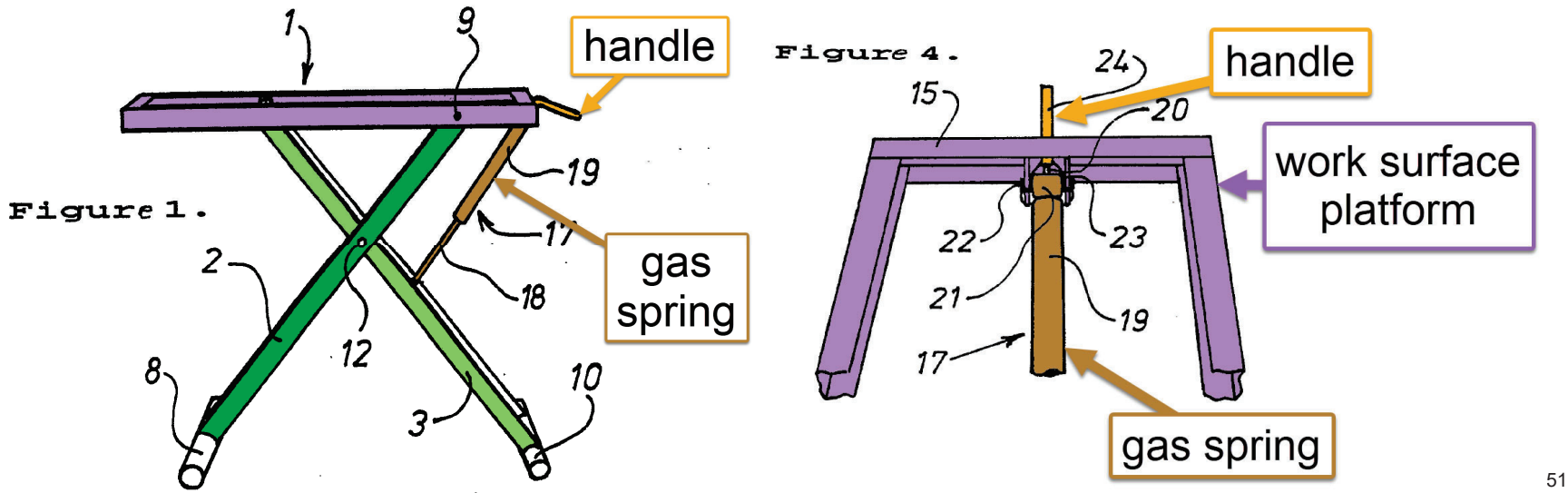

[51]

*"The **operating means 24 has an elongated shape and has a handle 26** provided on the rear thereof and a part 27 which function to engage the end of the pin 20 on the front thereof. ... **This fact enables the gas-spring to be operated effectively.** When the pin 20 is pressed inwardly by means of the operating means 24, the release valve in the gas-spring will open. The gas-spring is thereby compressed with a force which is greater than the resistance exerted by the gas-spring, which takes place when the stand is to be pressed down to a low level. If it is wished to maintain the stand at this low level, the pressure on the pin is removed, thereby causing the pin to return to its starting position. This closes the release valve in the gas-spring and the spring will thereby be blocked and function as a rigid rod. When wishing to raise the stand, the pin 20 is pressed-in by means of the operating means 24, thereby raising the frame part of the stand to the desired position, whereafter the pressure on the pin 20 is removed." Lindahl 5:8-6:8 (emphasis added)*

As shown in the figure above, and further as described in the citation above, the Lindahl mechanism is provided with a handle that unlocks the locking device (i.e. the locking gas spring). This is in response to the pressure applied by a user to the handle portion of operating means 24.

2P. The desktop workspace of claim 1,	**YES:** As shown above, Lindahl in view of Yamamoto, and in further view of Clark discloses the desktop workspace of claim 1.

[51] Lindahl Figures 1 and 4, combined and annotated

2a. wherein the platform element further includes four legs that support the elevated platform surface above the work surface platform,	**YES:** Clark discloses that the platform element further includes four legs that support the elevated platform surface above the work surface platform.

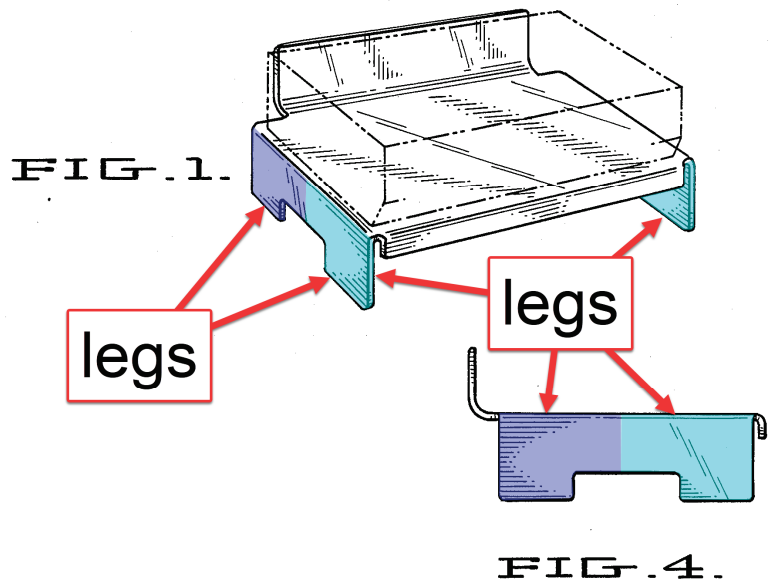

[52]

"Fig. 4 is a left side view, the right side being a mirror image of the left side shown;"[53]

As shown above, the Clark printer stand has four legs, i.e. there are four surfaces that will come into contact with any platform or surface the printer stand is placed on. These four legs extend from the work surface up to the supported elevated platform surface as shown in the figures above. The description of Figure 4 in Clark specifies that the Clark design is symmetric, i.e. the right side of Clark is a mirror image of the left side as shown in Figure 4. This clearly shows how the two most easily visible legs of Clark as shown in Figures 1 and 4 are mirrored on the opposite side i.e. there are another two legs on the other side of the Clark printer stand making for a total of four legs.

2b. each of the four legs being proximate to one of four corners of the elevated platform surface.	**YES:** Clark discloses that each of the four legs being proximate to one of the four corners of the elevated platform surface.

[52] Clark Figures 1 and 4, combined and annotated
[53] US D308537, pg. 1

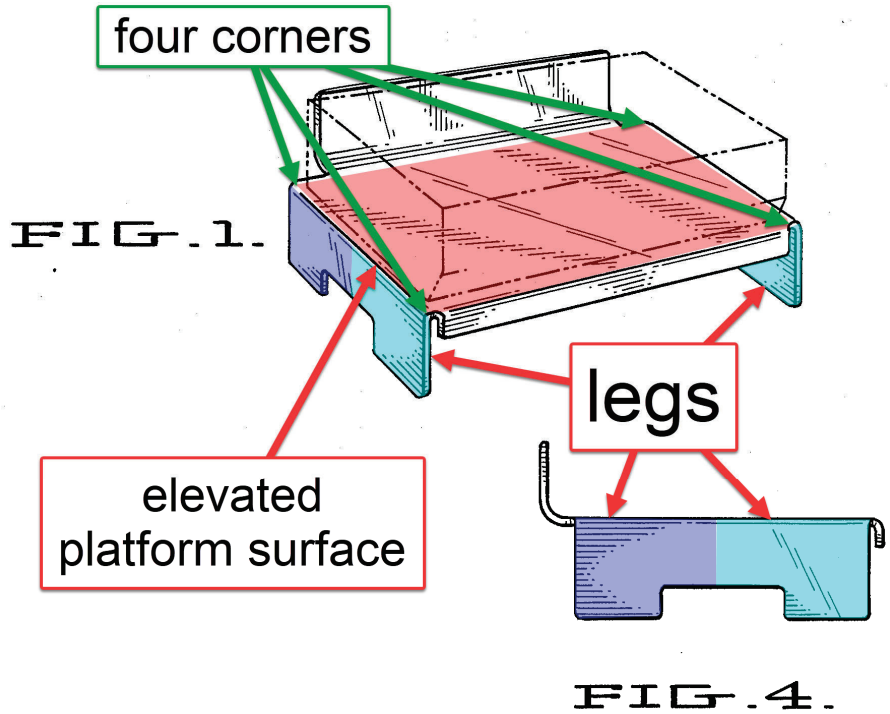

[54]

"Fig. 4 is a left side view, the right side being a mirror image of the left side shown;"[55]

As previously discussed, the Clark printer stand has four legs. Further, as shown above, each of the four legs is proximate to one of the four corners of the elevated platform surface. In fact, each of the four legs directly abuts a corner of the elevated platform surface.

3P. The desktop workspace of claim 1,	**YES:** As shown above, Lindahl in view of Yamamoto, and in further view of Clark discloses the desktop workspace of claim 1.
3a. wherein the platform element includes four sides including a bottom side on the work surface platform,	**YES:** Lindahl in view of Yamamoto, and in further view of Clark discloses that the platform element includes four sides including a bottom side on the work surface platform.

[54] Clark Figures 1 and 4, combined and annotated
[55] US D308537, pg. 1

3b. a top side forming the elevated platform surface and two sidewalls that support the elevated platform surface above the bottom side and the work surface platform.	Further the platform element has a top side forming the elevated platform surface and two sidewalls that support the elevated platform surface above the bottom side and the work surface platform.

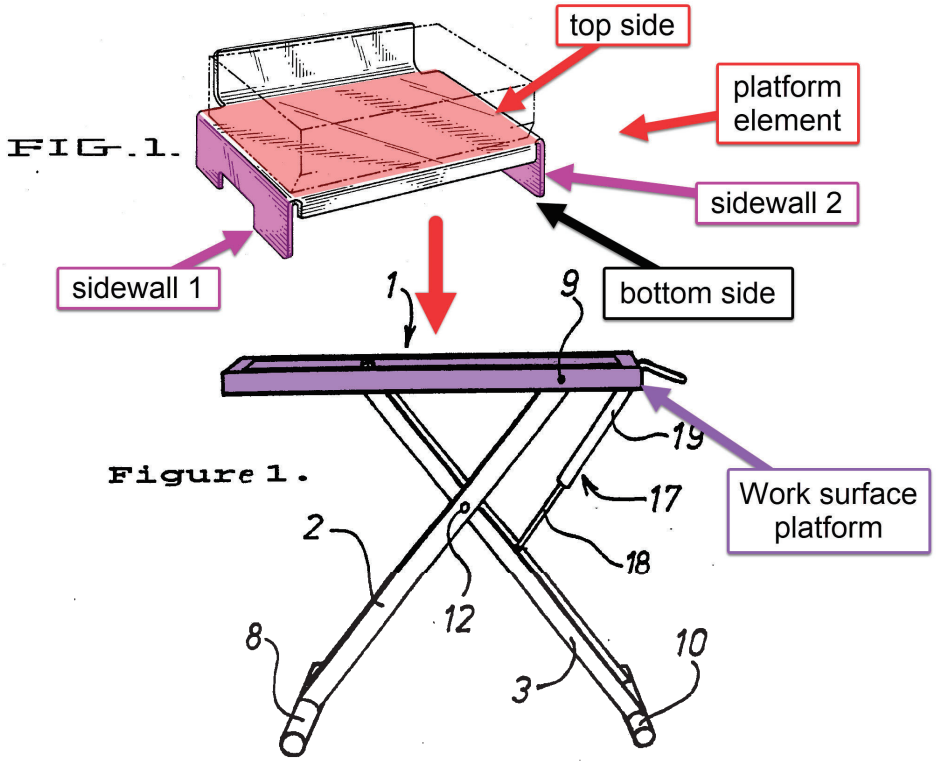

[56]

As shown above, the platform element of Clark has at least four sides. In fact, it has more than four sides. For example, it has a bottom side, which is the bottom of the legs which support the platform element of Clark (aka the top side). As discussed previously, a POSITA would understand and find it obvious that the Clark style printing stand would typically be placed on top of a work surface such as that of Lindahl, or any other adequately sized horizontal surface for that matter. When the Clark printer stand is placed on Lindahl, the bottom side of the printer stand will be in direct contact with the work surface platform. Further, the Clark printer stand has a top side as already discussed. Further still, the Clark printer stand has two sidewalls that support the platform surface up of the bottom side and above the work surface platform. As shown in the figures above, the legs of Clark have outward facing surfaces (aka sidewalls).

[56] Clark figure 1 and Lindahl Figure 1, combined and annotated

6P. The desktop workspace of claim 1,	**YES:** As shown previously, Lindahl in view of Yamamoto, and in further view of Clark discloses the desktop workspace of claim 1.
6a. wherein the one end of the gas spring is fixed to the work surface platform via a bracket fixed to an underside of the work surface platform.	**YES:** Lindahl discloses that one end of the gas spring is fixed to the work surface platform via a bracket fixed to an underside of the work surface platform.

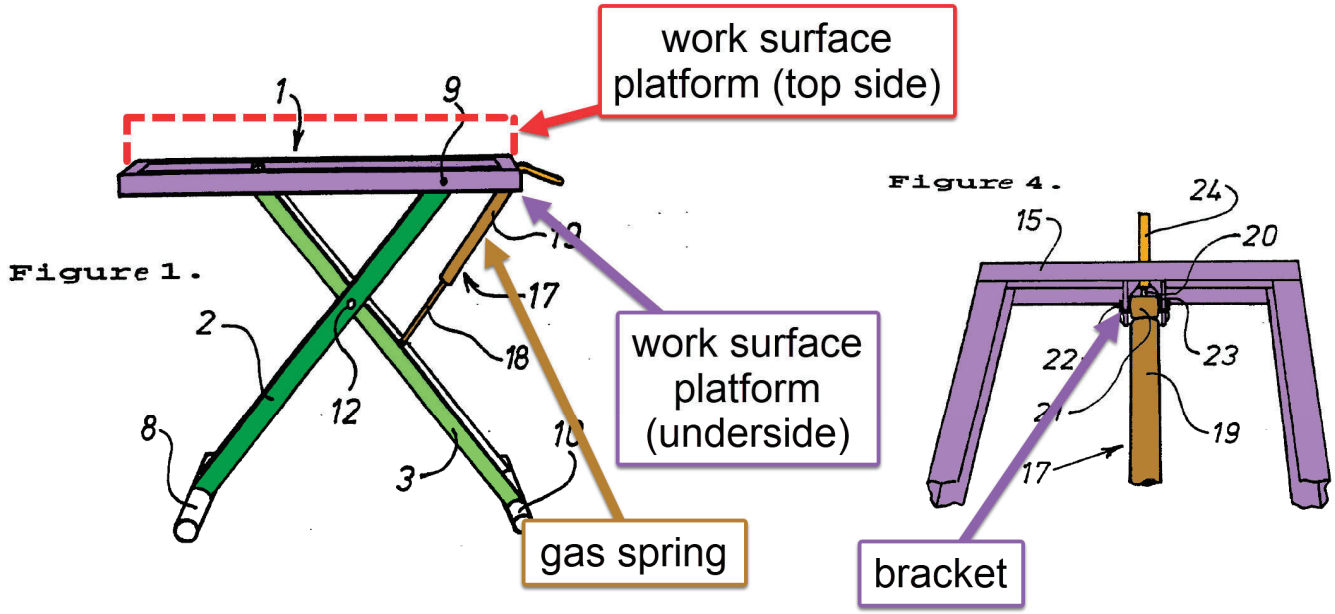

"The present invention relates to a table stand for use preferably in caravans and motorhomes, wherein the top of the stand is provided with a frame-like ***<u>part on which a tabletop is intended to be placed</u>*** *and which is adjustable in the height direction so that the tabletop can be adjusted vertically to different positions." Lindhal, Abstract (emphasis added)*

"An essential feature of the invention is that a blockable gas-spring 17, or piston-cylinder device is provided for enabling the position of the frame-like part 1 to be adjusted vertically in a smooth continuous fashion, both in an upward and in a downward direction. The gas-spring includes a bottom part 18 which is pivotally connected to the leg member 3 beneath the pivot rod 12, and an upper part 19 which is pivotally connected to the transverse frame-bar 15 on the same side of a vertical plane passing through the rod 12 as the lower part 18 (see also Figures 3, 4)." Lindahl 4:5-15

"The pin 20 is intended to coact with a cylindrical bushing 21 which is pivotally connected to a holder means 23, by means of screws 22 or the like, said holder means being mounted on the inside of the frame bar 15." Lindahl 4:23-27

As shown above Lindahl discloses a work surface platform that comprises a top side (tabletop intended to be placed on the frame) as well as an underside (the frame portion highlighted in purple above). Further, Lindahl discloses a gas spring fixed to the work surface platform via a bracket which is fixed to the underside portion. This is clearly shown in Figure 4 of Lindahl which shows a bracket with ears to which the locking gas spring is coupled.

Yamamoto teaches mounting the pivot arms to the bottom side of the work surface platform using a bracket as shown below:

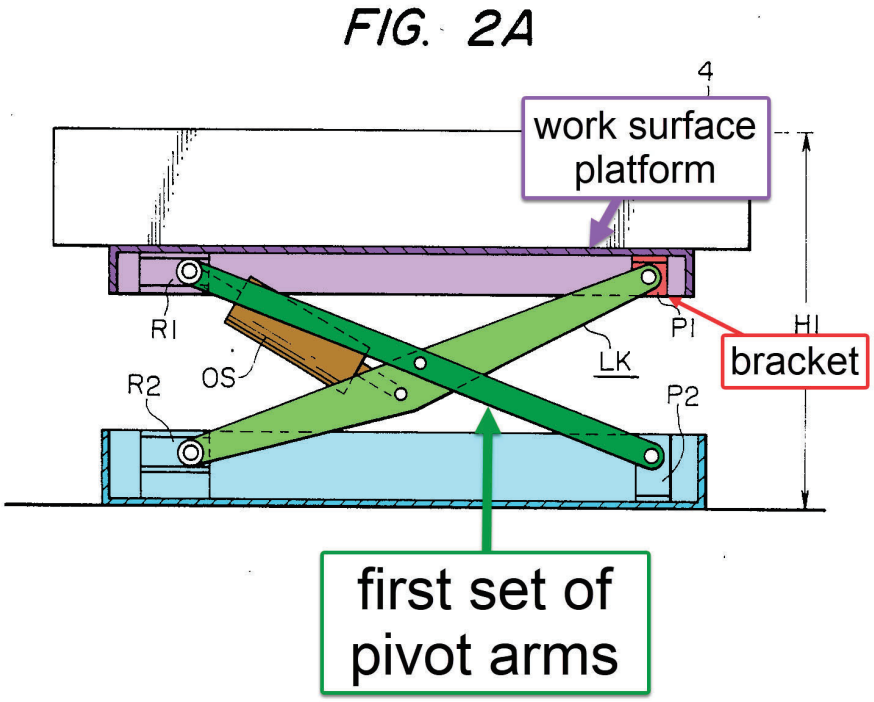

"The lifter LF includes a link mechanism LK having bearings P1 and P2 fixed to ends thereof and rollers R1 and R2 on opposite ends thereof which are movable along a guide rail." Yamamoto 1:68-2:5

As shown above, Yamamoto teaches mounting of the pivot arms to the underside of the work surface platform through the use of a bracket (i.e. pillow block bearing P1 above). A POSITA would understand that the gas spring could easily be mounted to the bottom of the work surface platform using the same methodology.	
7P. The desktop workspace of claim 6,	**YES:** As shown previously, Lindahl in view of Yamamoto, and in further view of Clark discloses the desktop workspace of claim 6.
7a. wherein the gas spring is attached directly to the one of the first set of pivot arms.	**YES:** Lindahl in view of Yamamoto discloses that the gas spring is attached directly to one of the first set of pivot arms.

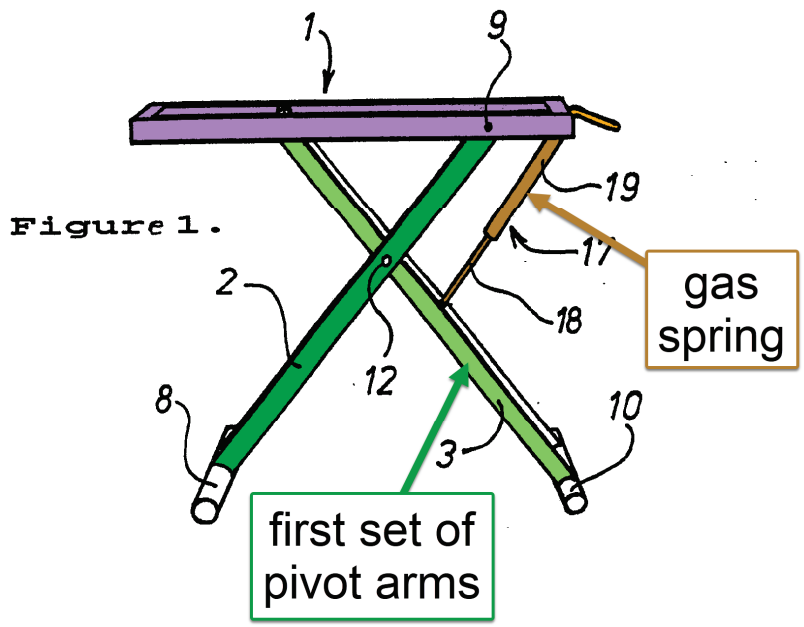

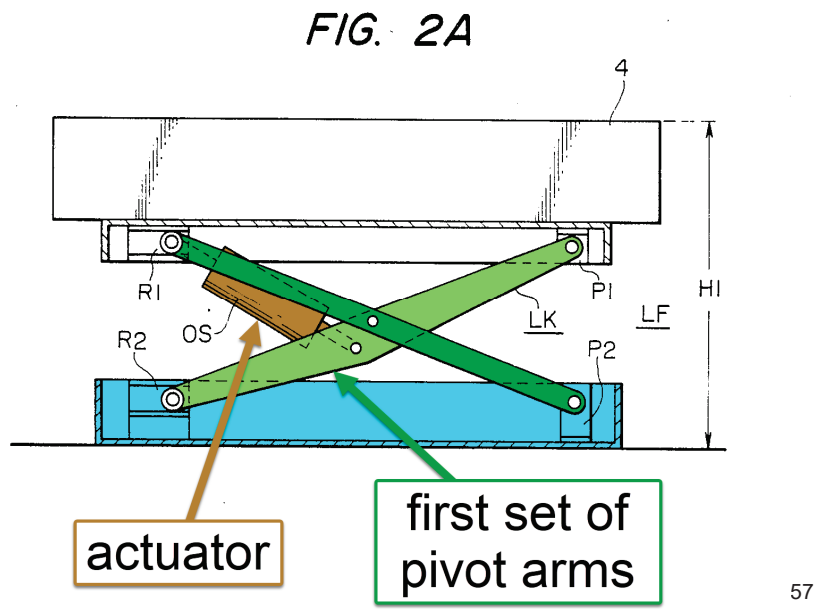

[57]

"The gas-spring includes a bottom part 18 which is pivotally connected to the leg member 3 beneath the pivot rod 12" Lindahl 4:10-12

As shown above, the gas spring is attached directly to one of the first set of pivot arms. It the gas spring has a bottom part 18 (the rod end) which is pivotally connected to leg member 3, which is one of the first set of pivot arms. Further still, Yamamoto Figure 2A shows that the piston cylinder style actuator is directly connected to the first set of pivot arms.

[57] Lindahl Figure 1 and Yamamoto Figure 2A, combined and annotated

8P. The desktop workspace of claim 1,	**YES:** As shown previously, Lindahl in view of Yamamoto, and in further view of Clark discloses the desktop workspace of claim 1.
8a. wherein the gas spring is attached directly to the one of the first set of pivot arms.	**YES:** See element 7a.
9P. The desktop workspace of claim 1,	**YES:** As shown previously, Lindahl in view of Yamamoto, and in further view of Clark discloses the desktop workspace of claim 1.
9a. wherein the sliding mechanism is a first sliding mechanism, **9b.** the desktop workspace further comprising a second sliding mechanism,	**YES:** Lindahl in view of Yamamoto discloses that the sliding mechanism is a first sliding mechanism. Further this combination discloses that there is a second sliding mechanism.

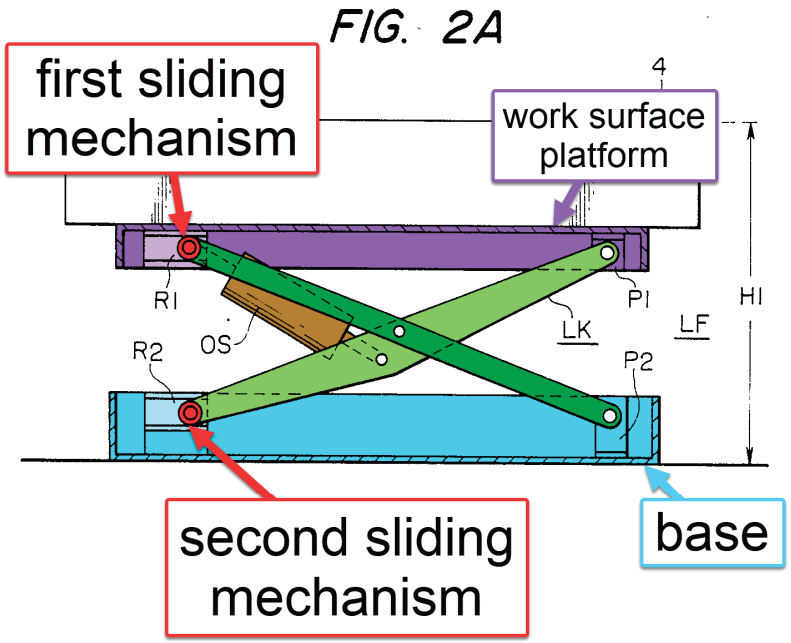

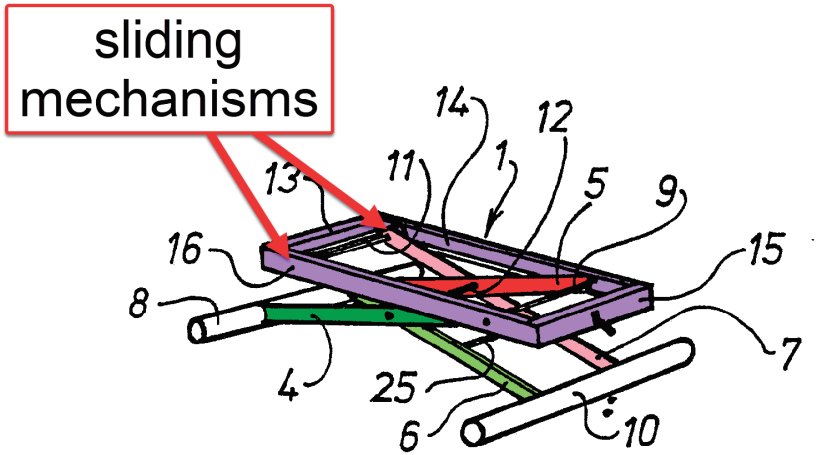

[58]

"The one rod 9 is pivotally mounted in the bars 14, 15, whereas the other ***transverse rod 11 is provided at both ends with suitable means for sliding in the U-shaped part of the bars*** *in order to achieve the aforesaid scissor-like movement of the leg members." Lindahl 3:31-4:3 (emphasis added)*

[58] Yamamoto Figure 2A and Lindahl Figure 2, combined and annotated

"The lifter LF includes a link mechanism LK having bearing P1 and P2 fixed to ends thereof and rollers R1 and R2 on opposite ends thereof which are movable along a guide rail" Yamamoto 1:68-2:3

As shown above, both Lindahl and Yamamoto have a first sliding mechanism, which is what allows the top portion of the scissor links to translate relative to the work surface platform. In addition to this, Yamamoto discloses a second sliding mechanism that is operable between the pivot arms and the base. Again, this is typical scissor linkage design that any POSITA would readily understand is ubiquitous. As discussed previously, the combination of Lindahl in view of Yamamoto would incorporate the base of Yamamoto. Consequently, it would also incorporate the sliding mechanism in the base of Yamamoto.

9c. wherein either the first sliding mechanism or the second sliding mechanism is attached or slides along the work surface platform, **9d.** and the other of the first sliding mechanism and the second sliding mechanism is attached to or slides along the base.	**YES:** Lindahl in view of Yamamoto discloses that either the first or the second sliding mechanism is attached or slides along the work surface platform. Further, the other first and second sliding mechanism is attached to or slides along the base.

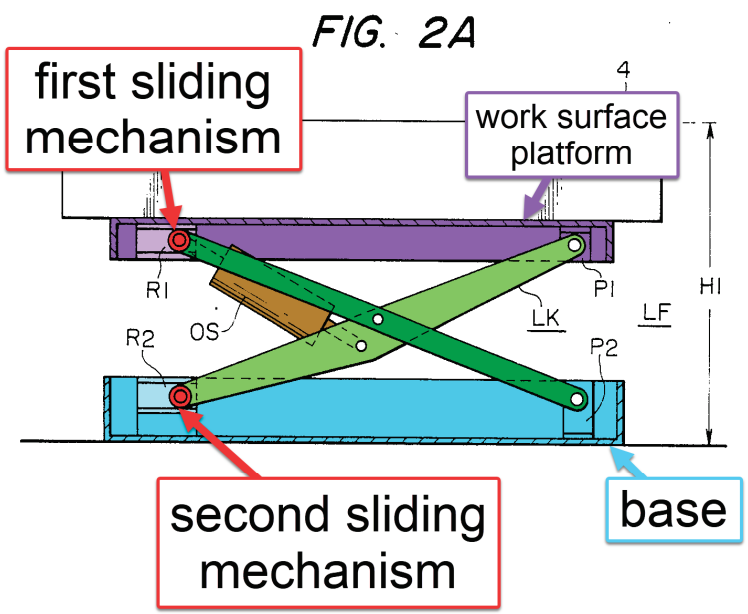

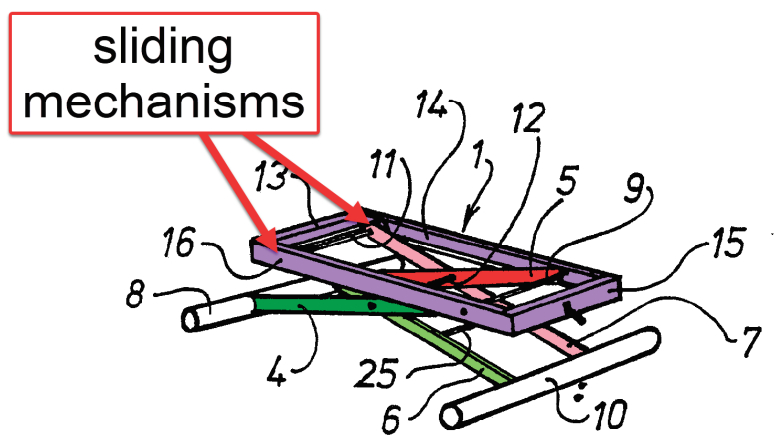

59

[59] Yamamoto Figure 2A and Lindahl Figure 2, combined and annotated

"The one rod 9 is pivotally mounted in the bars 14, 15, whereas the other ***transverse rod 11 is provided at both ends with suitable means for sliding in the U-shaped part of the bars*** *in order to achieve the aforesaid scissor-like movement of the leg members." Lindahl 3:31-4:3 (emphasis added)* *"The lifter LF includes a link mechanism LK having bearing P1 and P2 fixed to ends thereof and rollers R1 and R2 on opposite ends thereof which are movable along a guide rail" Yamamoto 1:68-2:3* As shown above, both Lindahl and Yamamoto show that the first sliding mechanism(s) are attached to or slide along the work surface platform. Further, Yamamoto has a second sliding mechanism (item R2 as shown above) that is attached to or slides along the base. As discussed previously, the combination of Lindahl in view of Yamamoto would incorporate the base of Yamamoto. Consequently, it would also incorporate the sliding mechanism in the base of Yamamoto.	
10P. The desktop workspace of claim 1,	**YES:** As shown previously, Lindahl in view of Yamamoto, and in further view of Clark discloses the desktop workspace of claim 1.
10a. wherein the scissoring motion when raising and lowering the work surface platform to various heights of the height adjustment mechanism moves the work surface platform in a straight vertical direction relative to the base.	**YES:** Yamamoto discloses that the scissoring motion when raising and lowering the work surface platform to various heights of the height adjustment mechanism moves the work surface platform in a straight vertical line relative to the base.

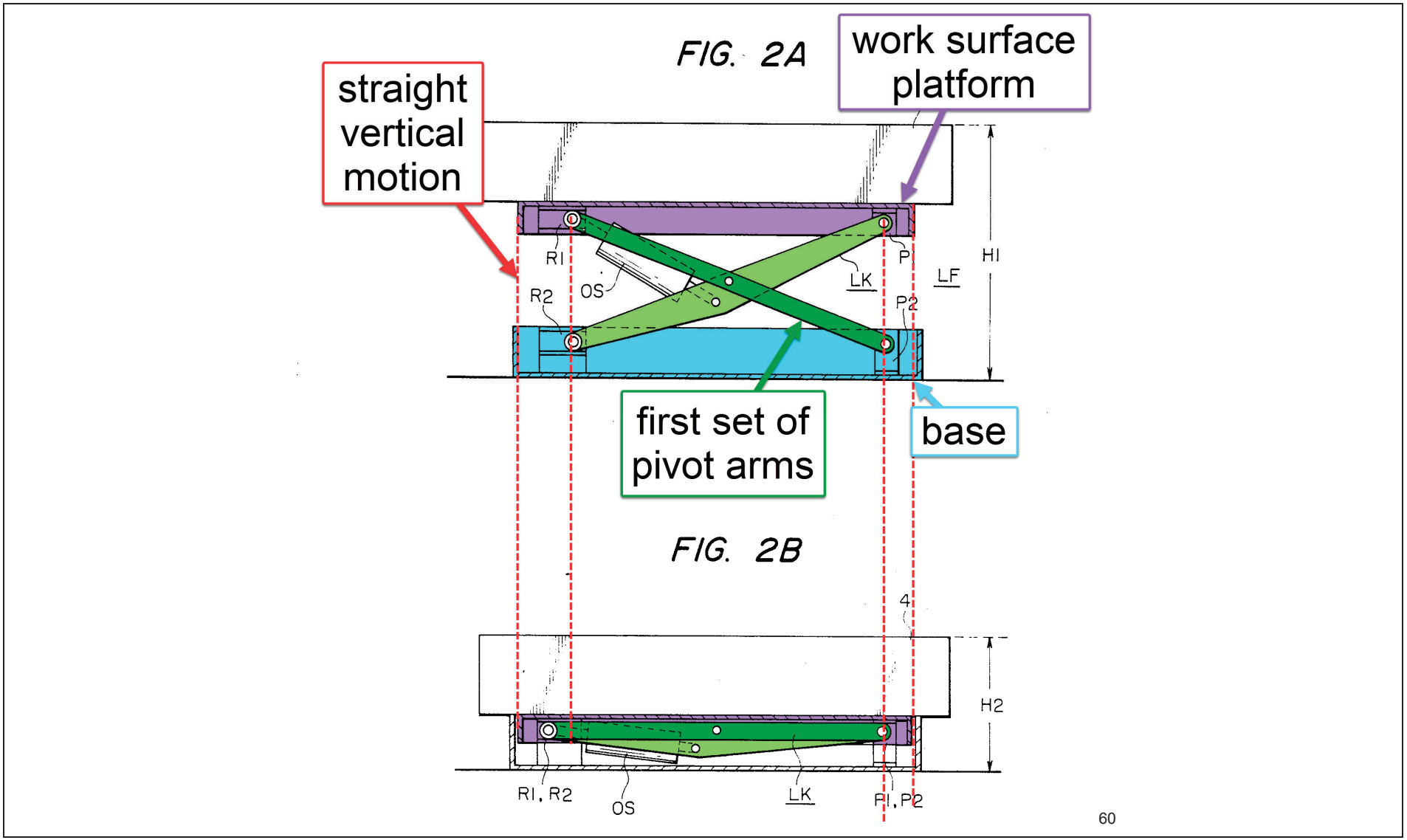

[60]

[60] Yamamoto Figures 2A and 2B, combined and annotated

"To meet this demand, it has been proposed to combine a lifter with the bed for adjusting the height of the bed. FIG. 2 illustrates the arrangement of such a mechanism for producing vertical movement. The height of the fluidized bed, and hence the height of the tank 4, are freely adjustable by a lifter LF between a maximum height H1 and a minimum height H2. The lifter LF includes a link mechanism LK having bearings P1 and P2 fixed to the ends thereof and rollers R1 and R2 on opposite ends thereof which are movable along a guide rail. A hydraulic cylinder OS serves as a vertical drive unit for extending and retracting the link mechanism LK. Vertical movement of such a vertically movable fluidized bed with a patient thereon while the beads 5 are in a flowing condition, however, results in the danger of causing the patient to move unnecessarily on the bed." Yamamoto 1:61-2:9 As shown above, the scissor mechanism of Yamamoto moves the work surface platform in a straight vertical line relative to the base. This is a property typical of scissor lifting mechanisms generally as a POSITA would understand. Thus, the Lindahl mechanism also exhibits straight-line vertical motion. That the mechanism is adjustable to various heights has already been shown. This feature is afforded by the locking gas spring in Lindahl and the hydraulic cylinder of Yamamoto.	
11P. The desktop workspace of claim 1,	**YES:** As shown previously, Lindahl in view of Yamamoto, and in further view of Clark discloses the desktop workspace of claim 1.
11a. wherein the sliding mechanism includes a wheel mounted on the end of the arm of the first set of pivot arms.	**YES:** Yamamoto discloses that the sliding mechanism includes a wheel mounted on the end of the arm of the first set of pivot arms.

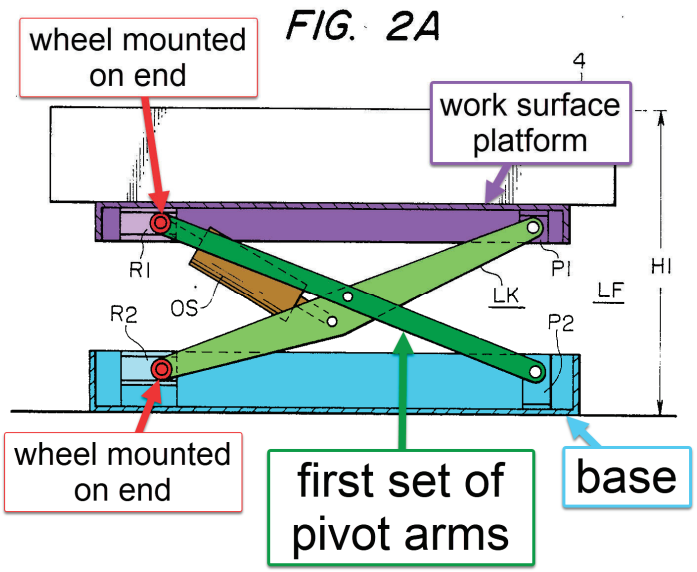

[61]

"The lifter LF includes a link mechanism LK having bearings P1 and P2 fixed to ends thereof ***and rollers R1 and R2 on opposite ends thereof which are movable along a guide rail.*** *A hydraulic cylinder OS serves as a vertical drive unit for extending and retracting the link mechanism LK." Yamamoto 1:68-2:5 (emphasis added)*

As shown above, Yamamoto discloses a sliding mechanism that includes a wheel mounted on the end of the arm of the first set of pivot arms. Yamamoto discloses at least two such wheels as R1 and R2. This is a very common design for scissor lifts, and example of which is shown in Yamamoto. As previously discussed, a sliding or rolling mechanism of some kind is generally necessary to allow a scissor linkage to move up and down. Some scissor linkages use sliding contact, others use rolling contact. A POSITA would be motivated to use the wheel as disclosed in Yamamoto as rolling contact has less friction than sliding contact. This would lead to better ease of use and less wear and tear on the mechanism.

12P. The desktop workspace of claim 1,	**YES:** As shown previously, Lindahl in view of Yamamoto, and in further view of Clark discloses the desktop workspace of claim 1.
12a. wherein the base pivot point is a first base pivot point,	**YES:** Lindahl in view of Yamamoto discloses that that base pivot point is a first base pivot point.

[61] Yamamoto Figure 2A, annotated

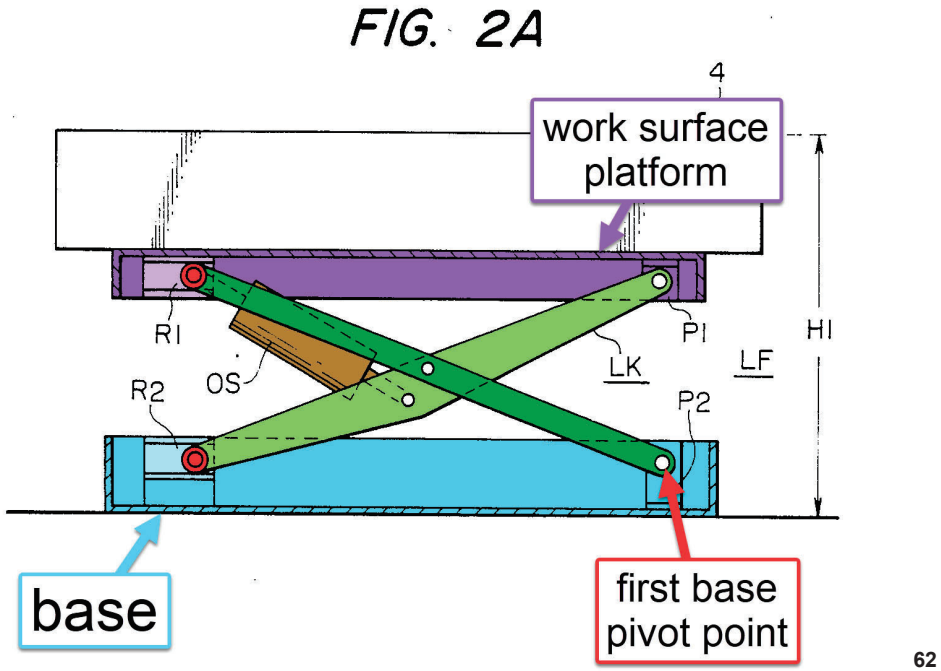

[62]

"The lifter LF includes a link mechanism LK having bearings P1 and P2 fixed to ends thereof and rollers R1 and R2 on opposite ends thereof which are movable along a guide rail." Yamamoto 1:68-2:3

As shown above, as is ubiquitous with scissor linkage design, Yamamoto discloses a set of pivot points, two which are fixed and two of which are able to translate. This is what allows the scissor lift mechanism to move with the traditional scissoring action. As a consequence, all scissor linkages with a base member have a first base pivot point (P2 in the case of Yamamoto).

12b. wherein the height adjustment mechanism further includes a second base pivot point fixed relative to the base and connecting the base and the second set of pivot arms, and	**YES:** Lindahl in view of Yamamoto discloses that the height adjustment mechanism further includes a second base pivot point fixed relative to the base and connecting the base to the second set of pivot arms.

[62] Yamamoto Figure 2A, annotated

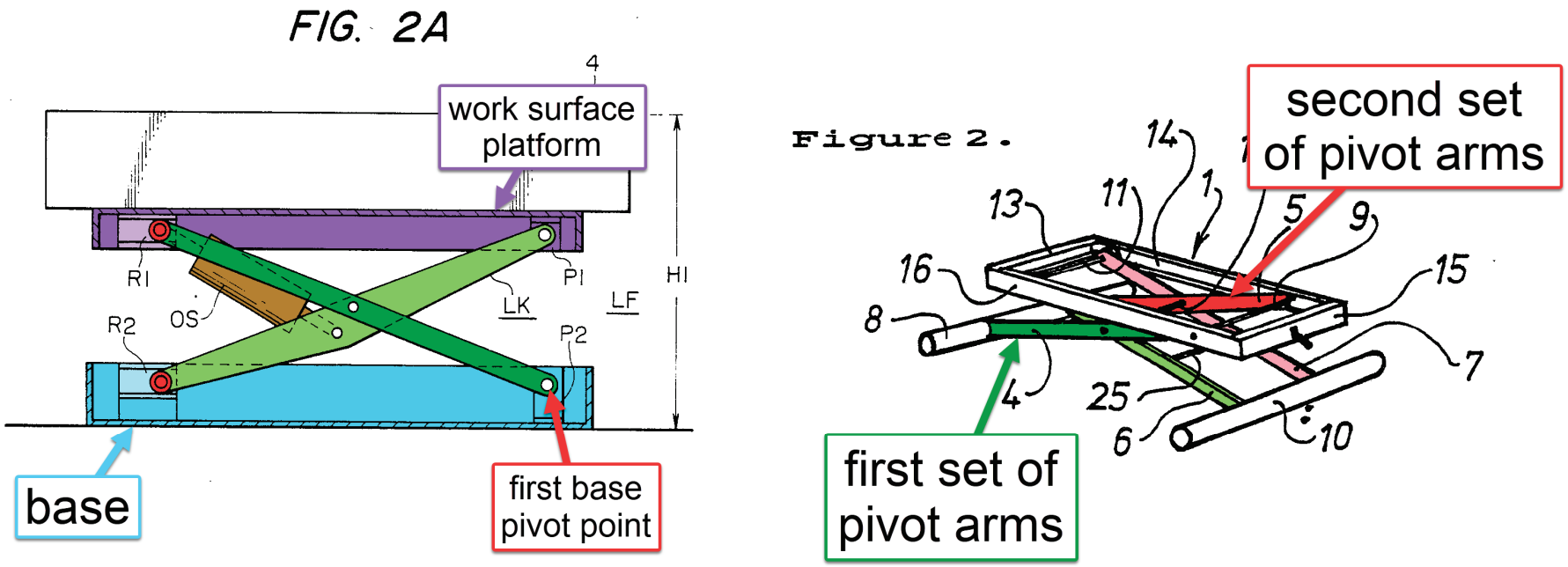

63

"The lifter LF includes a link mechanism LK having bearings P1 and P2 fixed to ends thereof and rollers R1 and R2 on opposite ends thereof which are movable along a guide rail." Yamamoto 1:68-2:3

"…The pairs of bars 4, 5; 6, 7 are mutually connected by means of a hinge means or pivot in the form of a transverse rod 12, which extends through the bars approximately midway therealong the rods, preferably at a location which is slightly above centre. This enables the two ends of respective pairs of bars 4, 5; 6, 7 to be moved towards and away from each other in a scissor-like fashion and therewith move the frame-like part 1 vertically." (Lindahl 3:12-20)

As shown above and as shown previously, Yamamoto discloses a first base pivot point and at least one set of pivot arms. It is extremely common in scissor lift design to have a pair of scissor lift linkages (and therefore a pair of pivot arms). For example, Lindahl has a pair of pivot arms as previously discussed. Thus, the combination of Lindahl in view of Yamamoto will also have a second base pivot point which accompanies the second set of pivot arms of Lindahl. Were this not the case, there would be no purpose to having the second set of pivot arms as Lindahl has.

[63] Yamamoto Figure 2A and Lindahl Figure 2, combined and annotated

Further, the second base pivot point will be fixed relative to the base which connects to the second set of pivot arms in the same way that Yamamoto shows the base connecting to the first set of pivot arms.	
12c. wherein the base includes one or multiple stationary pieces of material connecting the first and second base pivot points to one another.	**YES:** Lindahl in view of Yamamoto discloses that the base includes one or multiple stationary pieces of material connecting the first and second base pivot points to one another.

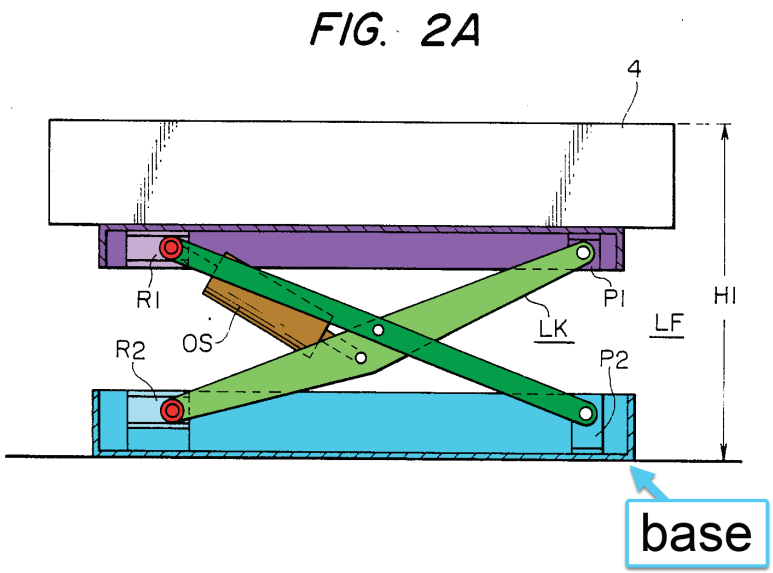

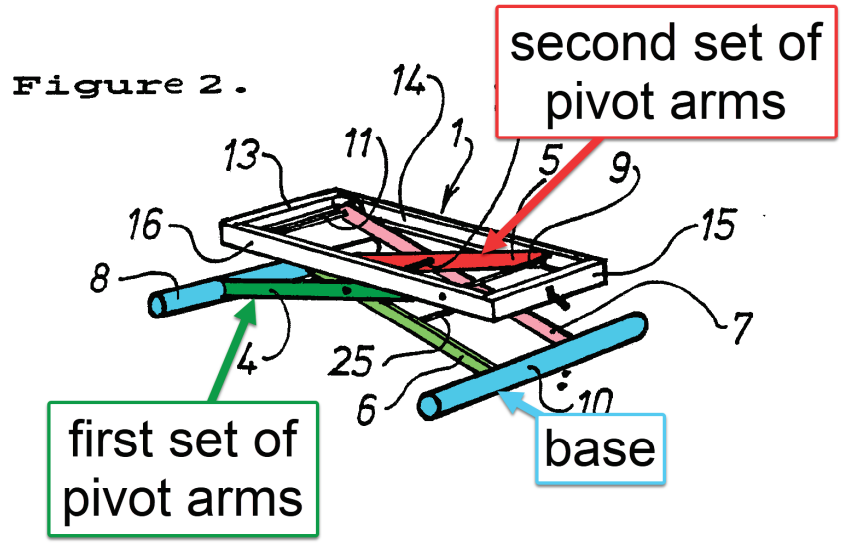

[64]

*"To meet this demand, it has been proposed to combine a lifter with the bed for adjusting the height of the bed. FIG. 2 illustrates the arrangement of such a mechanism for producing vertical movement. … **The lifter LF includes a link mechanism LK having bearings P1 and P2 fixed to ends thereof** and rollers R1 and R2 on opposite ends thereof which are movable along a guide rail." Yamamoto 1:61-64, 68-2:3 (emphasis added)*

*"Each leg member 2, 3 includes two substantially parallel rods or bars 4, 5; 6, 7, **wherein the two bars of each pair of bars are spaced from one another and are connected together at both ends thereof by means of a respective transverse rod 8, 9; 10, 11**, wherein the lowermost transverse rods 8; 10 function to support the stand against the underlying support surface…" Lindahl 3:3-10 (emphasis added)*

[64] Yamamoto Figure 2A and Lindhal Figure 2, combined and annotated

As shown above, Yamamoto has a stationary base. As shown in the figures and in the text, it is the patient bed (i.e. work surface platform) that moves up and down while the base remains in stationary contact with the existing platform (i.e. the floor).

Lindahl discloses material (transverse rods 8 and 10) that connects the first set of pivot arms to the second set of pivots arms. As the Lindahl mechanism is being collapsed, for instance, whichever transverse rod has more weight on it will be the stationary piece with respect to the existing platform.

As also shown above, Yamamoto has a base comprised of one or more stationary pieces. As previously discussed, the combination of Lindahl in view of Yamamoto incorporates the base of Yamamoto. Thus, the stationary base will connect the first and second base pivot points to one another.

13P. The desktop workspace of claim 1,	**YES:** As shown previously, Lindahl in view of Yamamoto, and in further view of Clark discloses the desktop workspace of claim 1.
13a. wherein the gas spring is attached to the one of the first set of pivot arms via an arm pivot point.	**YES:** Lindahl discloses that the gas spring is attached to one of the first set of pivot arms via an arm pivot point.

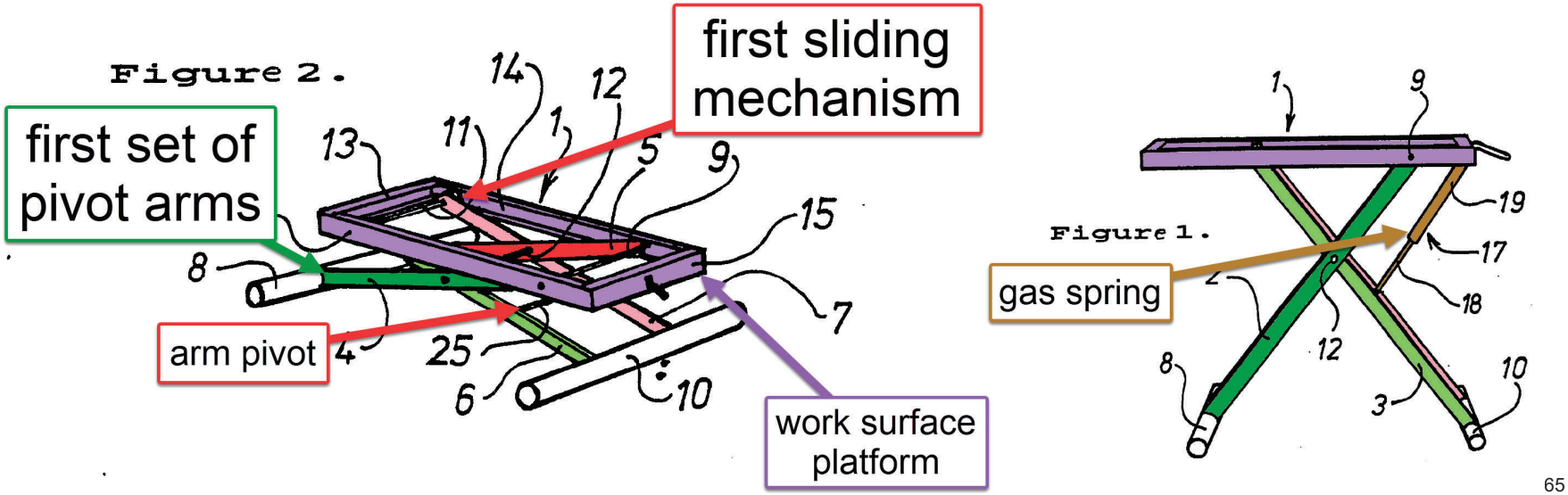

[65]

"According to this embodiment, the leg member 3 includes two parallel bars or rods 6, 7. The bottom part 18 of the gas-spring 17 is therewith pivotally connected to a transverse rod 25, which mutually connects the bars or rod 6, 7 and which is positioned beneath the hinge or pivot rod 12." Lindahl 5: 1-6

[65] Lindahl Figures 1 and 2, combined and annotated

As shown above, the gas spring of Lindahl is attached to one of the first set of pivot arms via an arm pivot point (i.e. transverse rod 25). As discussed previously, the Yamamoto mechanism connects the piston cylinder style actuator to one of the first set of pivot arms via a pivot point on the arm (i.e. an arm pivot point). This is typical and customary in scissor lift design.	
14P. The desktop workspace of claim 1,	**YES:** As shown previously, Lindahl in view of Yamamoto, and in further view of Clark discloses the desktop workspace of claim 1.
14a. wherein the element that connects the first set of pivot arms to the second set of pivot arms is attached on the same sides of the arms as the sliding mechanism relative to the scissoring pivot points.	**YES:** Lindahl discloses that the element that connects the first set of pivot arms to the second set of pivot arms is attached on the same sides of the arms as the sliding mechanism relative to the scissoring pivot points.

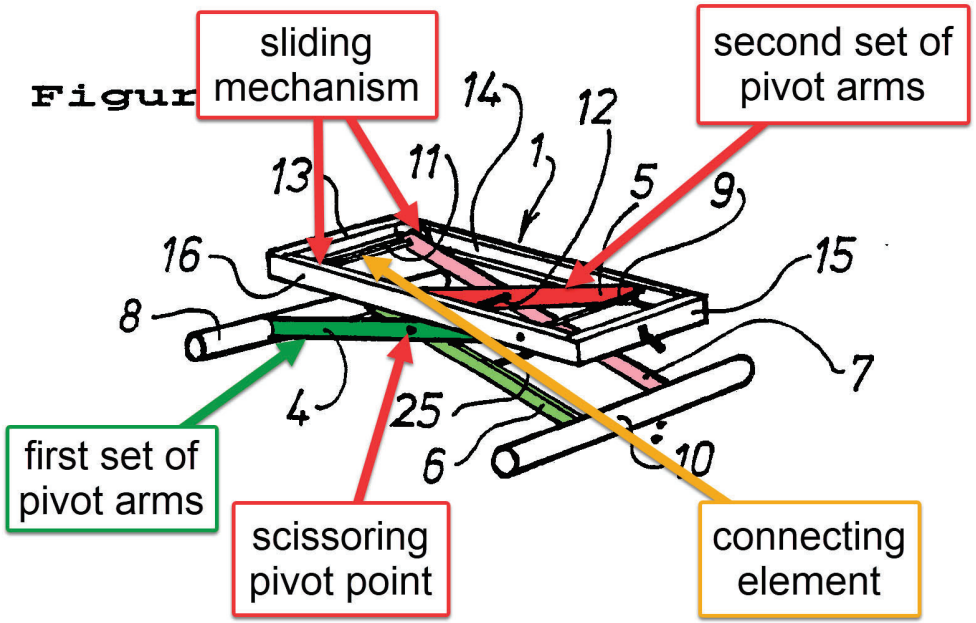

[66]

"Each leg member 2, 3 includes two substantially parallel rods or bars 4, 5; 6, 7, wherein the two bars of each pair of bars are spaced from one another and are connected together at both ends thereof by means of a respective transverse rod 8, 9; 10, 11; wherein the lowermost transverse rods 8; 10 function to support the stand against the underlying support surface …" Lindahl 3:3-10

[66] Lindahl Figure 2, annotated

"The one rod 9 is pivotally mounted in the bars 14, 15, whereas the other ***transverse rod 11 is provided at both ends with suitable means for sliding in the U-shaped part of the bars*** *in order to achieve the aforesaid scissor-like movement of the leg members." Lindahl 3:31-4:3 (emphasis added)* As shown above, transverse rod 11 of Lindahl is on the same side of the pivot arms as the sliding mechanism of Lindahl, relative to the scissoring pivot points. Further, as previously discussed, transverse rod 11 is an element that connects the first set of pivot arms to the second set of pivot arms.	
16P. A desktop workspace that adjusts vertically, comprising:	**YES:** See element 1P.
16a. a work surface platform;	**YES:** See element 1a.
16b. a platform element sitting on the work surface platform, the platform element including an elevated platform surface above the work surface platform;	**YES:** See element 1b.
16c. a base configured to sit on an existing platform; and	**YES:** See element 1c.
16d. a height adjustment mechanism connecting the work surface platform and the base, the height adjustment mechanism including:	**YES:** See element 1d.
16d1. a first set of pivot arms that connect at a scissoring pivot point creating a scissoring motion when raising and lowering the work surface platform to various heights;	**YES:** See element 1d1.
16d2. a second set of pivot arms;	**YES:** See element 1d2.
16d3. an element that connects the first set of pivot arms to the second set of pivot arms;	**YES:** See element 1d3.
16d4. a base pivot point fixed relative to the base and connecting the base and the first set of pivot arms;	**YES:** See element 1d4.
16d5. a platform pivot point fixed relative to the work surface platform and connecting the work surface platform and the first set of pivot arms;	**YES:** See element 1d5.
16d6. a sliding mechanism on an end of an arm of the first set of pivot arms between the end of the arm and either the work surface platform or the base; and	**YES:** See element 1d6.
16d7. a gas spring that assists in elevation of the work surface platform by applying a force to one of the first set of pivot arms as part of the scissoring motion,	**YES:** See element 1d7.

16d8. wherein one end of the gas spring is fixed to the work surface platform, wherein the gas spring acts as a locking device that holds the work surface platform at various vertical heights above the base, and	**YES:** See element 1d8
16d9. wherein the gas spring, the first set of pivot arms, the base pivot point, and the platform pivot point align side-by-side when the desktop workspace is in a fully lowered position such that the desktop workspace adjusts vertically.	**YES:** Lindahl in view of Yamamoto discloses that the gas spring, the first set of pivot arms, the base pivot point, and the platform pivot point align side-by-side when the desktop workspace is in a fully lowered position such that the desktop workspace adjusts vertically.

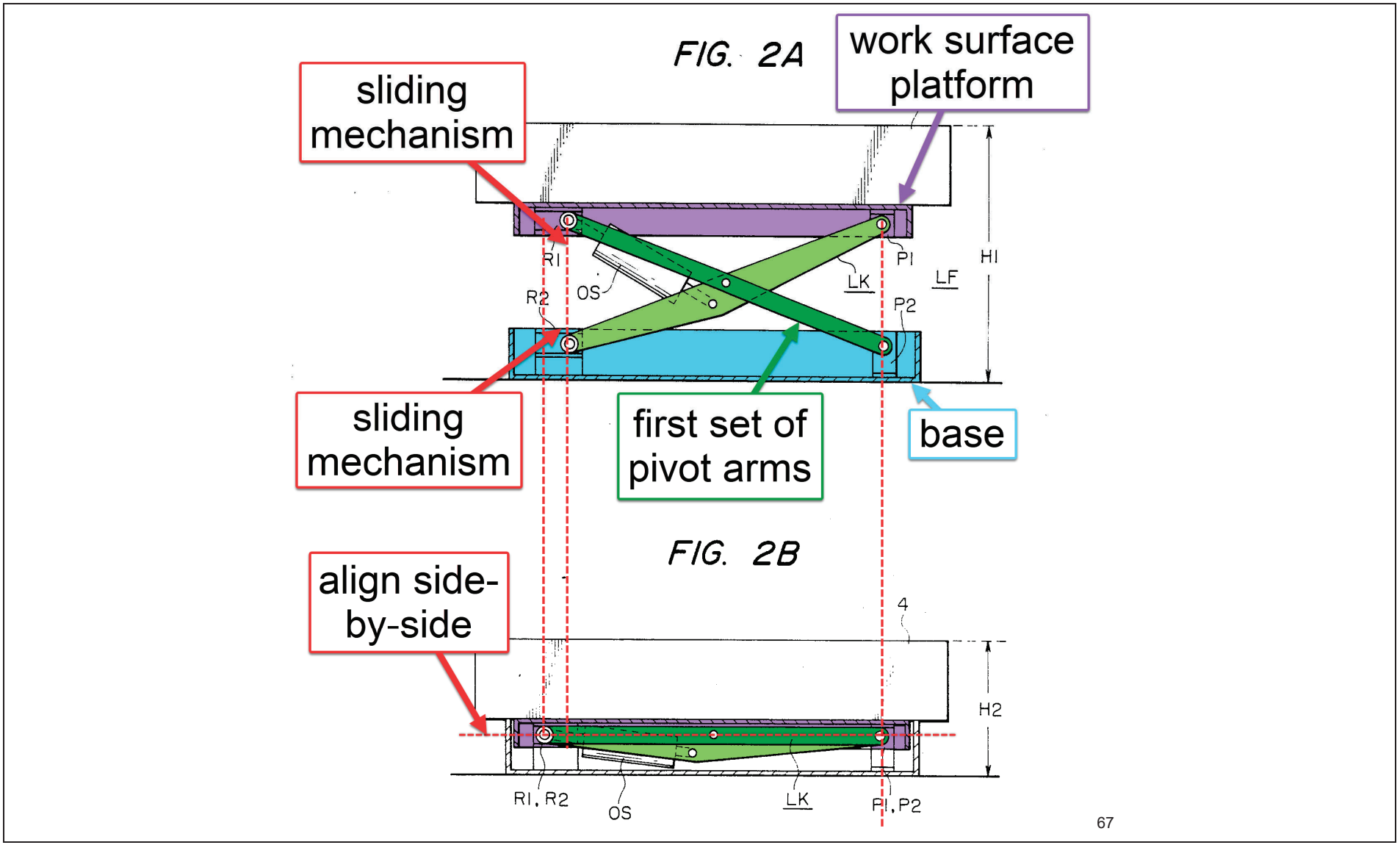

[67] Yamamoto Figures 2A and 2B, combined and annotated

"The conventional fluidized bed has a fixed height. However, there has been a demand for a fluidized bed having an adjustable height, ***specifically one in which the height of the bed above the floor can be made as small as possible*** *for ease in transferring a patient onto the bed or when a patient gets onto or off the bed, and placed at a suitable height when the patient is lying on the bed for administering treatment to the patient. To meet this demand, it has been proposed to combine a lifter with the bed for adjusting the height of the bed. FIG. 2 illustrates the arrangement of such a mechanism for producing vertical movement" Yamamoto 1:53-64 (emphasis added)*

As shown above, the Yamamoto linkage is arranged such that the first set of pivot arms, the base pivot point, and the platform pivot point align perfectly side-by-side when the workspace is in a fully lowered position. As Yamamoto uses a hydraulic cylinder to lift, the cylinder is also side-by-side with the pivot arms and other associated components. To the extent that this side-by-side alignment is construed to require that all pivot points of the gas spring are aligned on a horizontal line with the other pivot points, the gas spring is at least partially aligned in Yamamoto (i.e. one of the two pivot points of the cylinder is also in alignment).

The locking gas spring of Lindahl is mounted such that when permitted to fully collapse as the linkage in Yamamoto does, the gas spring pivots points will be in perfect horizontal alignment with the other pivot points.

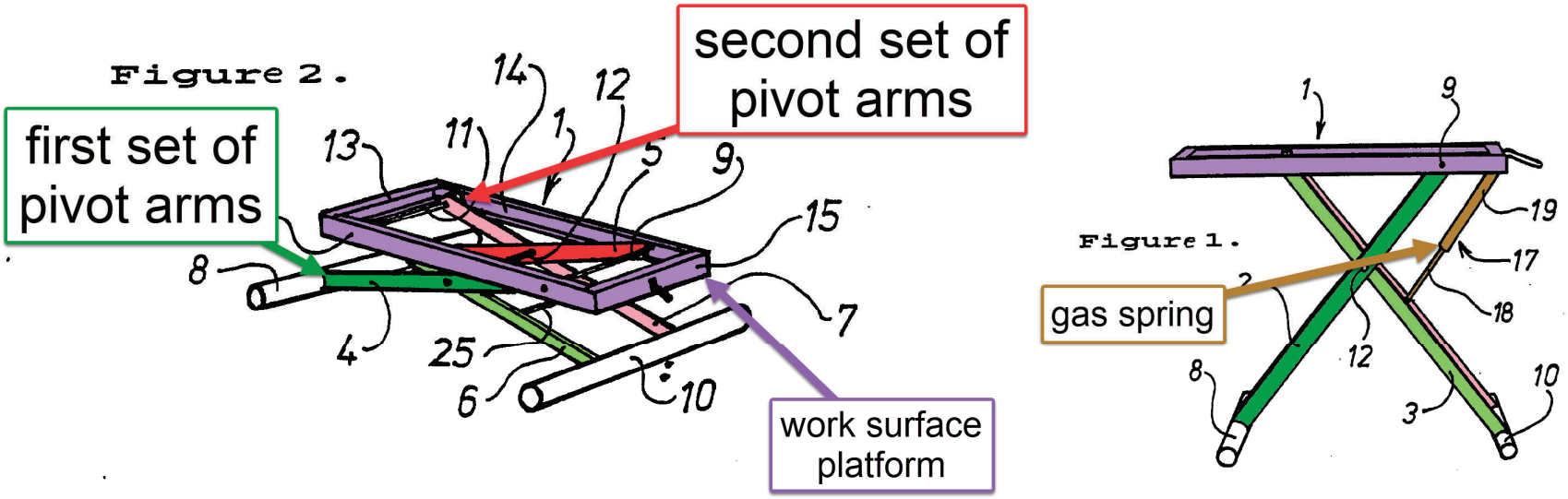

68

[68] Lindahl Figures 1 and 2, combined and annotated

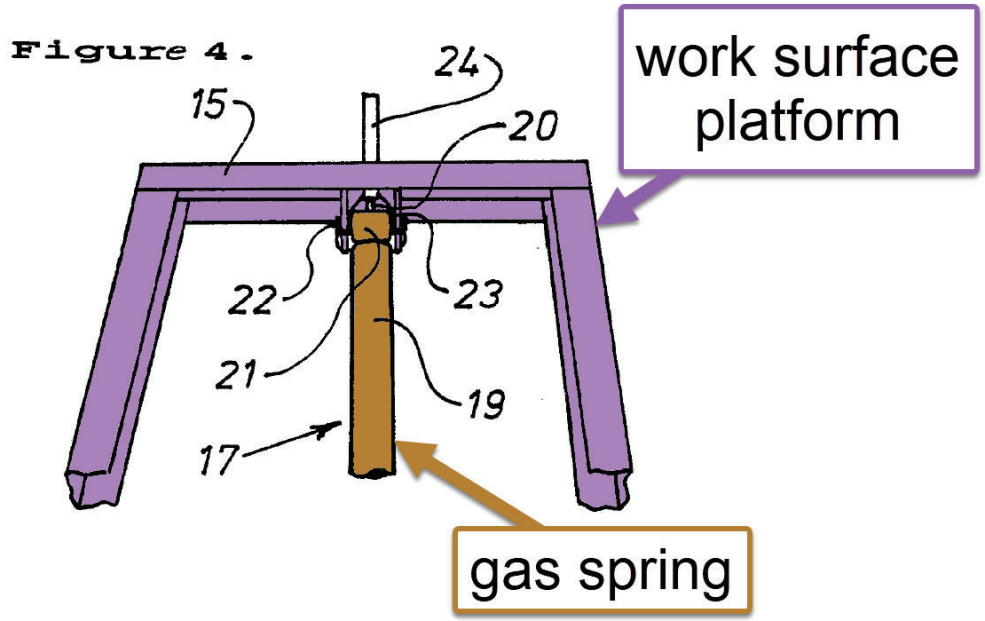

[69]

"An essential feature of the invention is that a blockable gas-spring 17, or piston-cylinder device is provided for enabling the position of the frame-like part 1 to be adjusted vertically in a smooth continuous fashion, both in an upward and in a downward direction. The gas-spring includes a bottom part 18 which is pivotally connected to the leg member 3 beneath the pivot rod 12, and an upper part 19 which is pivotally connected to the transverse frame-bar 15 on the same side of a vertical plane passing through the rod 12 as the lower part 18 (see also Figures 3, 4)." Lindahl 4:5-15

As shown above Lindahl uses a gas spring to assist in the lifting of the work surface platform as opposed to a hydraulic cylinder such as Yamamoto uses. Further, like Yamamoto, the top pivot point of the gas spring of Lindahl is aligned with the rest of the pivot points in the work surface platform frame. The second pivot point of the Lindahl gas spring is centrally located within the width of the pivot arms. In accordance with the teachings of Yamamoto (i.e. the desirability for compactness) and in accordance with the well-understood desire of compactness that is a common reason why scissor lift mechanisms are used in the first place, a POSITA would be motivated to combine the linkage of Yamamoto with the linkage of Lindahl in a way that the scissor arms will line up flat when the platform is fully lowered.

[69] Lindahl Figure 4, annotated

Further still, a POSITA will understand that gas springs are approximately constant force devices, unlike hydraulic cylinders such as used in Yamamoto. A POSITA will further understand that the actuator has the worst mechanical advantage for lifting the platform at the bottom (fully lowered) position. In this position the cylinder of Yamamoto is nearly horizontal. In other words, the actuator is least effective and must generate the largest force to lift the work surface platform when doing so from the fully lowered position. As stated earlier, a POSITA will recognize that a gas spring will be little utility to lift the platform when in this position. Thus, the lifting assistance provided by a nearly horizontal gas spring would be out-weighed by the loss of compactness offered by keeping the gas spring in a non-horizontal orientation. Thus, a POSITA would be motivated to combine the linkage of Yamamoto with the gas spring placement already in Lindahl to have maximum compactness in the stowed position. Were the gas spring of Lindahl to be oriented like the hydraulic cylinder of Yamamoto, the gas spring force would have to be increase significantly which would make the platform more difficult to adjust when at the top position. This could even make the table dangerous to adjust as the gas spring would develop greater and greater mechanical advantage as the platform is raised causing it to violently pop up at the end. Further, this would make the platform much more difficult to compress starting from the top. This is because gas-springs are not able to vary their output force in the same way as hydraulic cylinders. Thus, the combination of Lindahl in view of Yamamoto is configured such that the gas spring, the first set of pivots arms, the base pivot point, and the platform pivot point align side-by-side when the desktop is in a fully lowered position. As discussed previously, it is the very nature of scissor lift mechanisms generally to adjust vertically.	
17P. The desktop workspace of claim 16,	**YES:** As shown previously, Lindahl in view of Yamamoto, and in further view of Clark discloses the desktop workspace of claim 16.
17a. wherein the gas spring is a first spring,	**YES:** Lindahl discloses a gas spring that is a first spring.

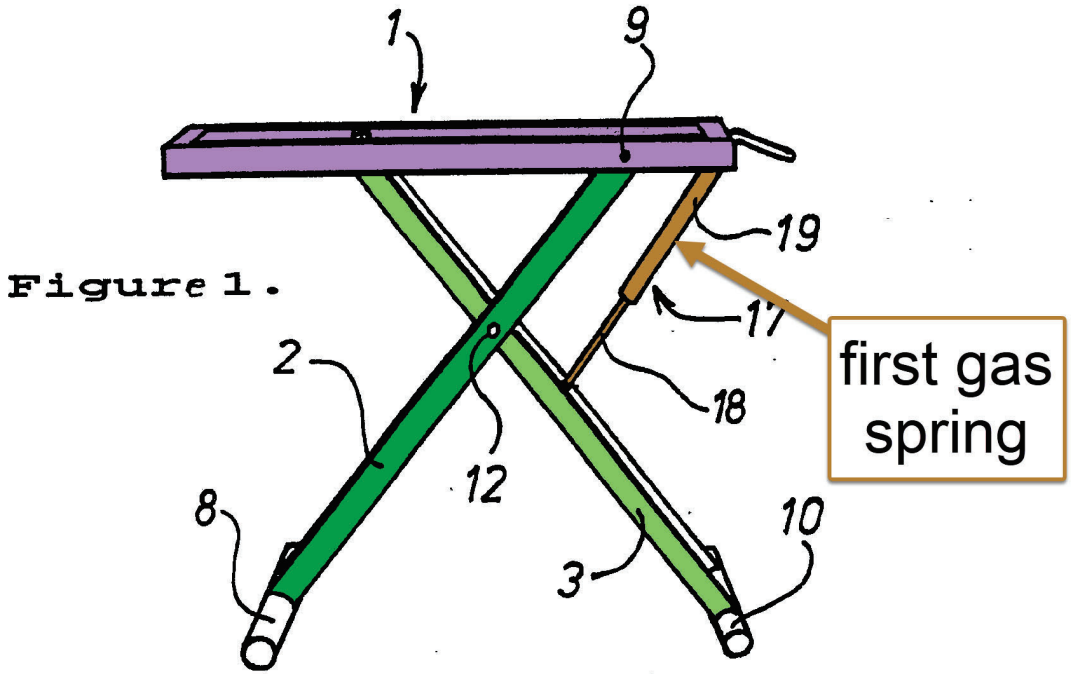

[70]

"An essential feature of the invention is that a blockable gas-spring 17, or piston-cylinder device is provided for enabling the position of the frame-like part 1 to be adjusted vertically in a smooth continuous fashion, both in an upward and in a downward direction. The gas-spring includes a bottom part 18 which is pivotally connected to the leg member 3 beneath the pivot rod 12, and an upper part 19 which is pivotally connected to the transverse frame-bar 15 on the same side of a vertical plane passing through the rod 12 as the lower part 18 (see also Figures 3, 4)." Lindahl 4:5-15

As shown above, Lindahl discloses a first gas spring (i.e. blockable gas-spring 17).

17b. the desktop workspace comprising a pair of springs attached to the height adjustment mechanism to assist in the elevation of the work surface platform, the pair of springs including the first spring and a second spring.	**YES:** A POSITA would recognize the addition of a second gas spring as an ordinary design choice with certain advantages such that the desktop workspace comprises a pair of springs attached to the height adjustment

[70] Lindahl Figure 1, annotated

	mechanism to assist in the elevation of the work surface platform, the pair of spring including the first spring and a second spring. In addition to this, Lindahl in view of Yamamoto, and in further view of Clark and other references such as CN203934825 to Zhang discloses a second gas spring such that the desktop workspace comprises a pair of springs attached to the height adjustment mechanism to assist in the elevation of the work surface platform, the pair of springs including the first spring and a second spring.

A POSITA would recognize that having multiple actuators for lifting the scissor lift linkage is well-known and customary. Further, a POSITA will recognize that when a second gas spring is added, the pair of gas springs can be arranged such that they are much closer to their respective set of pivot arms. This allows the scissor lift mechanism to be much more structurally efficient. For example, Lindahl's gas spring is attached in the center of an arm pivot bar (transverse rod 25) as previously discussed. An actuator connection in the middle of a bar such as this can lead to much more bending loads and stress. In contrast to this, it is well-known and understood that shorter connection distances lead to significantly less bending stress. A second gas spring allows the connection distances to be shorter such that the arm pivots primarily experience shear stress as opposed to bending stress. Further, the second gas spring allows this to be accomplished without compromising overall balance of the mechanism as a whole. A POSITA familiar with the principles of linkage design (such as a scissor lift linkage) will understand these principles and see this motivation to provide a second gas spring as an optional design choice in accordance with ordinary design practice.

Further still, a POSITA will also be motivated to use a pair of gas springs as this increases the amount of lifting assistance that is provided without detracting from the overall compactness of the stowed lift assembly. A POSITA will recognize that were a single larger locking gas spring to be used instead of two locking gas springs the larger gas spring will prevent the scissor linkage from collapsing to the same extent as it could with a smaller diameter actuator.

In addition to this, a POSITA could look to other pieces of prior art that make this optional design choice. For example, US 3,282,566 to Clarke discloses a scissor lift platform with as many as three fluid power cylinders acting in parallel.

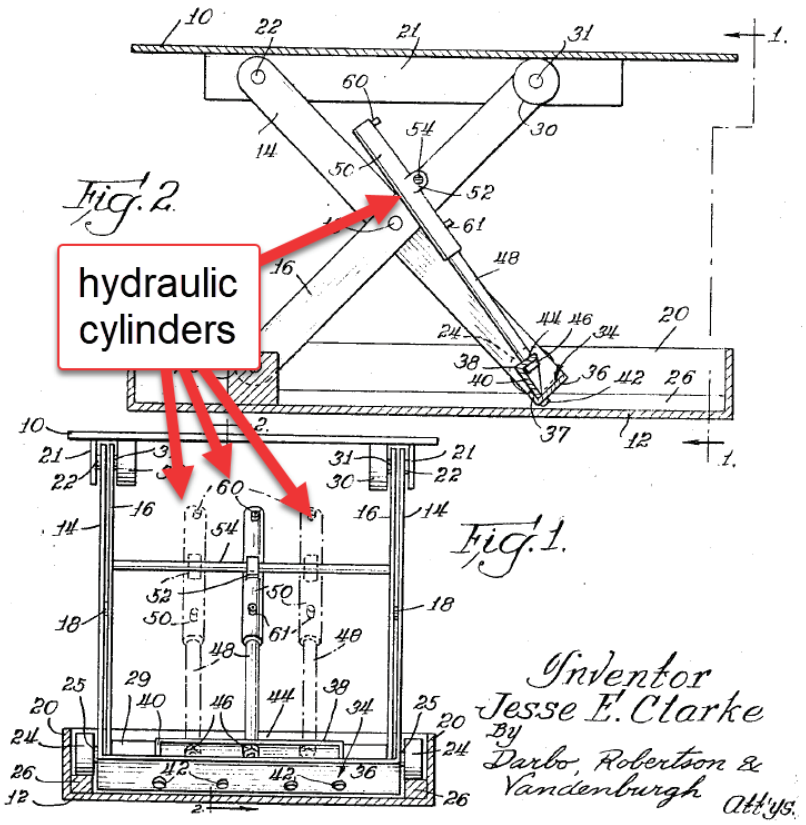

[71]

"To supply air or fluid pressure, each cylinder 50 is provided with an inlet 60 near its outer end to which some suitable connection (not shown) is made." US 3,282,566 to Clarke 2:67-69
"In this invention, a lift table with a completely closed scissor linkage is raised by one or more hydraulic cylinders, depending on the lifting force necessary." US 3,282,566 to Clarke 1:56-59

Further, a POSITA could also look to CN203934825 to Zhang (aka Zhang) circa 2014, which discloses the use of a pair of gas springs to facilitate the movement of a scissoring linkage style platform. The gas springs are locking gas springs and are tied together through the use of Bowden cables in a manner well known and in accordance with typical engineering practice.

[71] Clarke Figures 1 and 2, combined and annotated

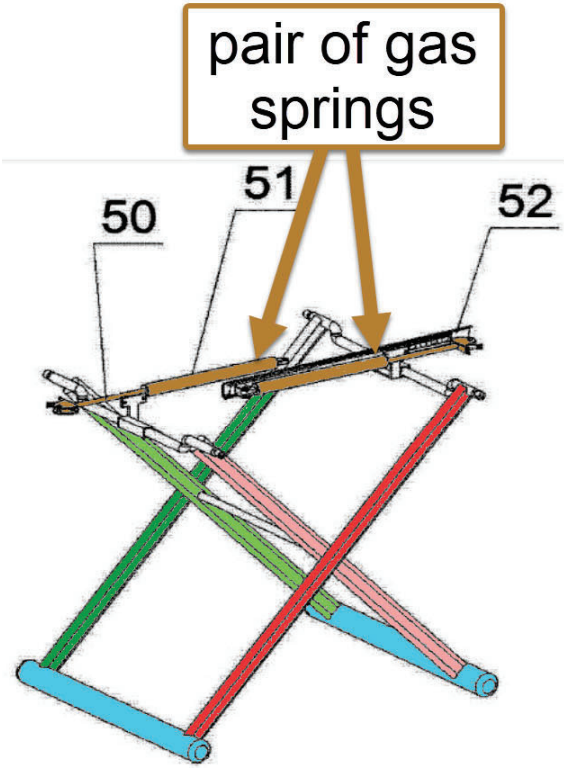

[Image]

Figure 5

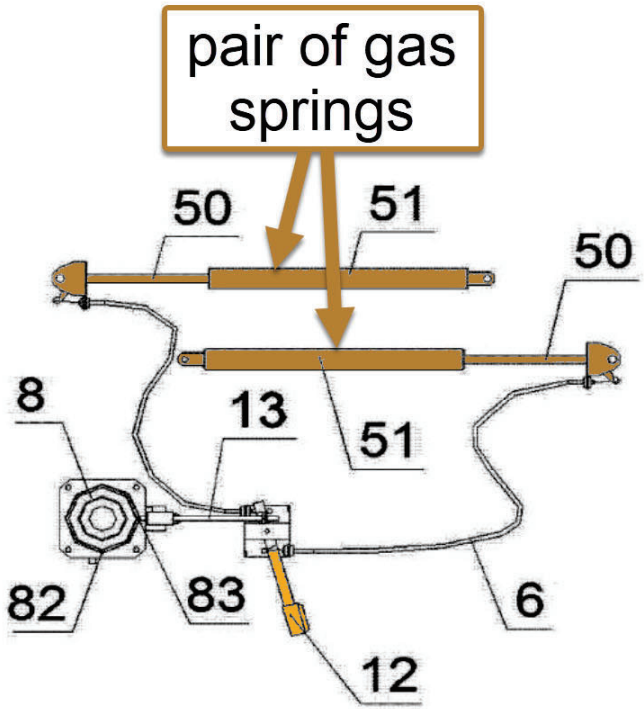

[Image]

Figure 8

[72]

"The two air struts are controlled by a pull switch 6." Zhang, Abstract

"The positive effect of this utility model is that the height adjustable table using this structure can control the opening angle of the "X" – shaped cross movable metal feet through the joint action of horizontal guide rails, air support rods, pull switches and other components to adjust the height of the desktop and perform height positioning, making it very convenient to adjust the desktop height." Zhang [0009]

[72] Zhang Figure 5 and 8 (annotated)

As shown above, Zhang discloses the use of a pair of locking gas springs to adjustably set the height of a desktop work surface. Even without the disclosure of Zhang or Clarke, a POSITA would readily be aware of and familiar with the optional design choice of adding a second gas spring to Lindahl.

As shown above, Lindahl in view of Yamamoto and in Further view of Clark with the knowledge of a POSITA renders obvious each and every element of the Asserted Claims of the ’843 patent. In addition to this, certain things that would be well within the ordinary knowledge and familiarity of a POSITA are also explicitly demonstrated in Clarke and Zhang. For at least the reasons shown above, it is my opinion that the Asserted Claims of the ’843 patent are invalid due to obviousness under 35 U.S.C §103.