71. As will be demonstrated in the charts below, at least claims 1-3, 6-14, and 16-17 are rendered obvious by Clarke in view Lindahl and in further view of Clark. For reference these three pieces of prior art are shown below:

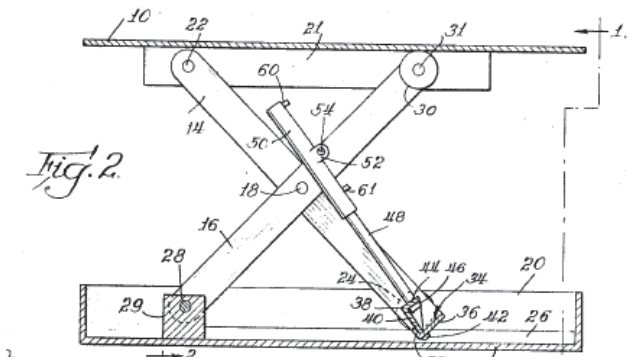	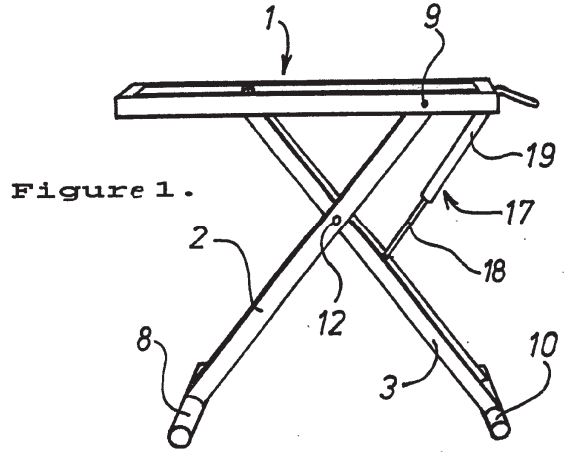	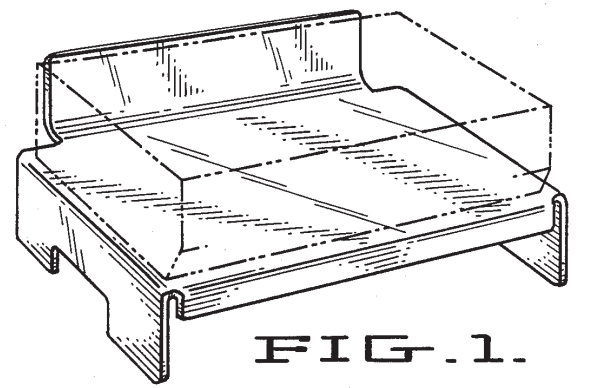
US 3,282,566 to Clarke May 18, 1964	WO 9117906 to Lindahl November 28, 1991	US D308,537 to Clark June 12, 1991

72. I note that despite each of these references being publicly available, only Clarke was disclosed to the examiner during the prosecution of the ’843 patent. A POSITA would be motivated to combine these references in accordance with the teachings therein. For example, Clarke and Lindahl are both vertically adjustable platforms that use a scissor linkage and cylindrical actuator. They are highly compatible with each other, but Clarke shows greater vertical adjustability afforded by the ability to lower to a point where the pivots pints are aligned.[73] A POSITA will recognize that combining Clarke with Lindahl would allow for greater height adjustability as well as allowing the Lindahl table to store more compactly. When combined, the gas spring of Lindahl will also be aligned with the links as in Clarke leading to maximum compactness for storage. A POSITA would further be motivated to combine the locking gas spring of Lindahl with the Clarke linkage, for instance, to create a scissor lift platform that is simpler in its construction and more suitable for lighter duty loading applications. Clarke uses one or more fluid power cylinders to actuate. Fluid power cylinders require hoses, valves, control systems, and pumps to operate. In contrast to this, the locking gas spring of Lindahl has a self-contained pressure source and thus obviates the need for such additional complexity. A POSITA will recognize this as a more desirable option particularly in adapting the Clarke arrangement to a lighter duty load application such as that taught by Lindahl.

[73] Clarke 1:8-35

73. A POSITA would be further motivated to combine Clark with the combination of Clarke in view of Lindahl as Clark discloses a printer stand which would foreseeably be placed on top of the vertically adjustable platform. It is well-known that a printer stand is not just placed on the floor. Rather it is placed on an elevated flat surface such as a table, a cabinet, or the like. This allows the printer output to be accessed without having to stoop down. Thus, it is ordinary and expectable that a POSITA, or anybody using a printer stand will place such a stand on another surface such as a table.

Challenged Claim '843	
1P. A desktop workspace that adjusts vertically, comprising:	**YES:** While the preamble is generally not considered limiting, both Clarke and Lindahl discloses a desktop workspace that adjusts vertically.

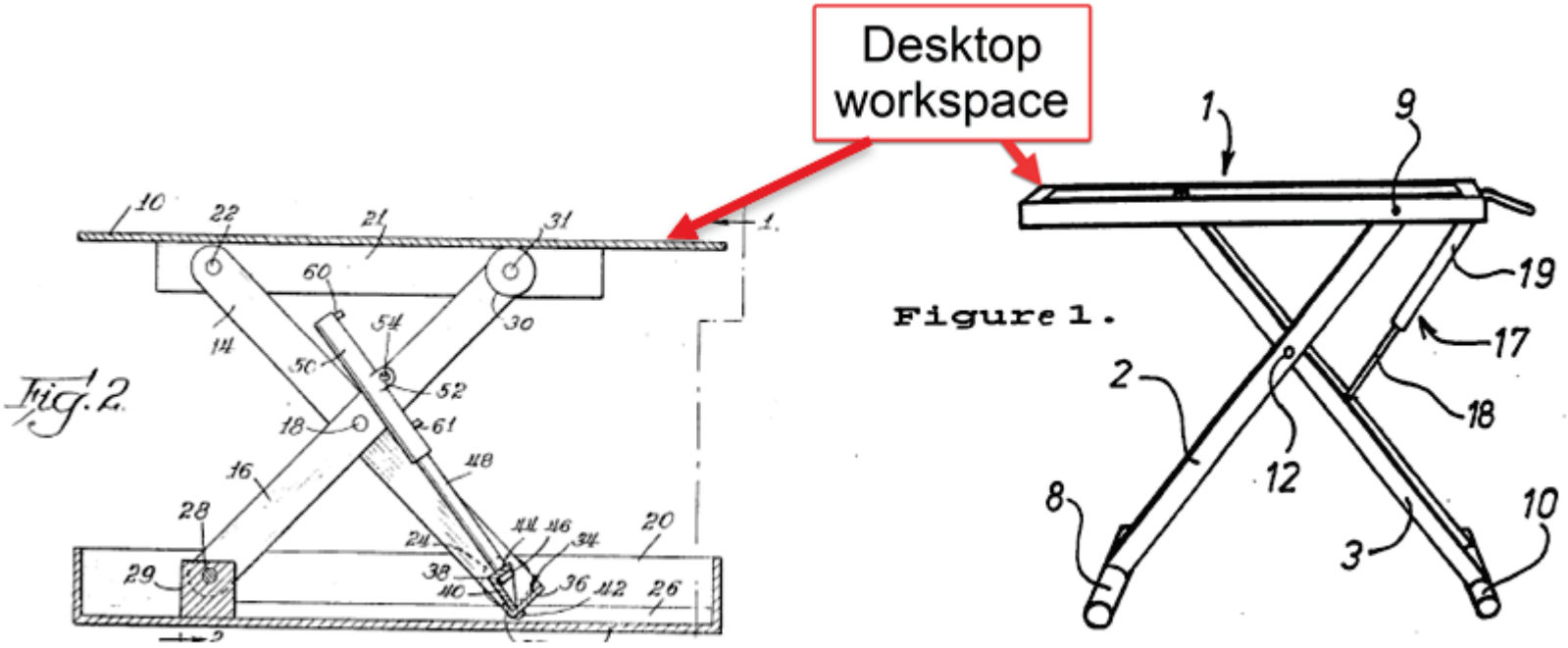

[74]

[74] Clarke, Figure2 and Lindahl, Figure 1, Annotated

A POSITA will understand that scissor lift mechanisms adjust the vertical height of a platform surface such as a desktop workspace.

Lindahl discloses a desktop workspace that adjusts vertically:

"The present invention relates to a table stand for use preferably in caravans and motorhomes, wherein the top of the stand is provided with a frame-like part on which a tabletop is intended to be placed and which is adjustable in the height direction so that the tabletop can be adjusted vertically to different positions." Lindhal, Abstract

As shown above, Lindahl describes a vertically adjustable workspace platform. A POSITA would readily recognize that the Lindahl vertical adjustment mechanism could be used for a wide variety of applications, as scissor lift mechanisms are extremely common and well-known.

Clarke also teaches a desktop workspace that adjusts vertically. For example, Clarke states:

"This invention relates to the operation of a scissors lift in changing it from a down or closed position to up or open position. It is particularly employed in connection with lift tables and the like." Clarke 1:8-11

As shown above, the Clarke linkage is intended for use in lift tables *generally.* As such, a POSITA will recognize its teachings as being applicable to lift mechanisms of many different types including that of a desk workspace style lift table. It is helpful to ascertain the plain and ordinary meaning and scope of "desktop workspace" considering the common dictionary definitions as shown below:

Desktop: the top of a desk[75]
Desk: A table, counter, or booth at which specified services or functions are performed[76]
Workspace: An area used or allocated for one's work, as in an office.[77]

The usage of the term desktop workspace within the '843 patent is consistent with the plain and ordinary meaning of the words from which this compound term is composed. For example, the desktop workspace in the '843 patent is described as having a top surface at which an operator stands to perform their work.[78] In just the same way, Clarke discloses a work surface in the form of a lift table. A POSITA will understand that a

[75] <https://www.ahdictionary.com/word/search.html?q=desktop> accessed Dec 29, 2024
[76] <https://www.ahdictionary.com/word/search.html?q=desk> accessed Dec 29, 2024
[77] <https://www.ahdictionary.com/word/search.html?q=workspace> accessed Dec 29, 2024
[78] '843 patent 1:33-66

lift table is a common piece of equipment that can be used to lift components to a more suitable height for laborers to perform their work at. Similarly, Lindahl discloses a desk surface which is a dedicated space allocated for one's work should they so choose.

1a. a work surface platform;	**YES:** Both Clarke and Lindahl disclose a work surface platform.

Clarke discloses a work surface platform as shown below:

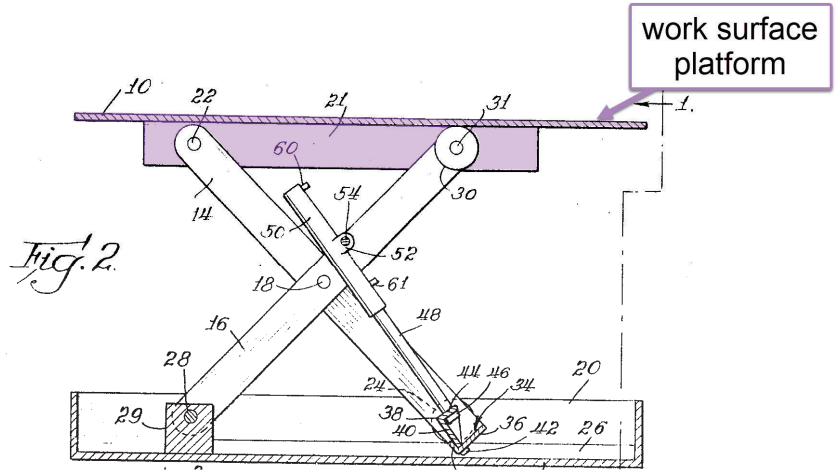

[79]

"Referring now more particularly to the drawings, the invention comprises a lift table having a top 10 and a base 12 connected by crossed scissors legs 14 and 16 at each side. Legs 14 and 16 are pivotally connected at 18. As shown, the base 12 is in the form of an open shallow box or receptacle having upright sides 20, and the top 10 fits down closely upon the sides enclosing all the operating parts, as shown in FIG. 4." Clarke 1:67-2:2

As shown above, Clarke discloses a lift table. A POSTIA understand that lift tables are useful for raising objects to various heights to be worked on. As such, a lift table is a clear example of a vertically adjustable work surface platform.

Lindahl also discloses a work surface platform as shown below:

[79] Clarke, Figure 2, Annotated

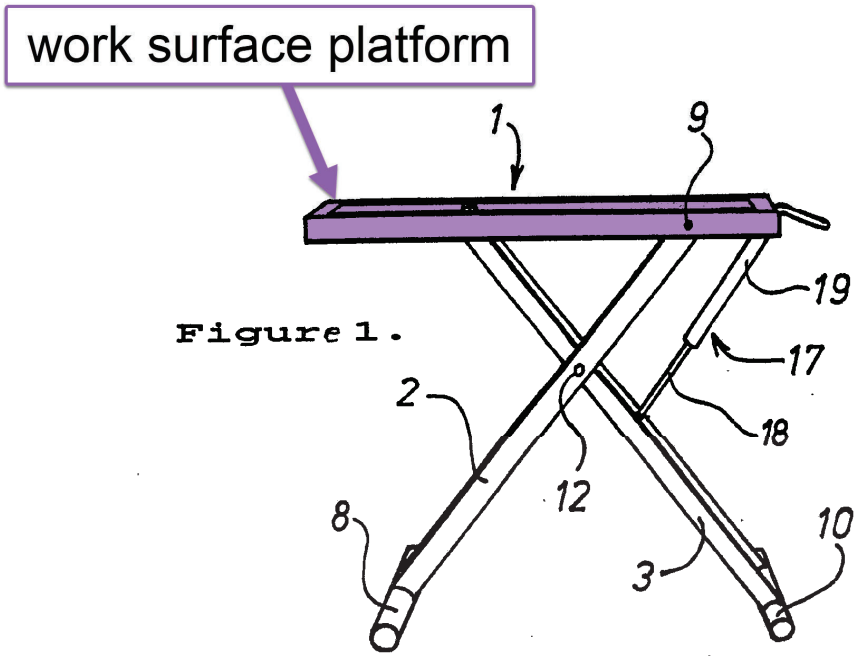

[80]

*"The present invention relates to a table stand intended for use preferably in caravans and motorhomes, wherein the stand supports at the top thereof a frame-like part on which a tabletop is intended to be placed… **Firstly the table is intended for use as a conventional dining table…**" Lindahl 1:3-6, 13-14 (emphasis added)*

"The stand includes a frame-like part 1 which is carried by two leg members 2, 3." Lindahl 3:1-3

As shown above, Lindahl describes a work surface platform that is intended to be used as a work surface platform. A POSITA will understand that a dining table is perfectly suitable for use as a work surface.

1b. a platform element sitting on the work surface platform, the platform element including an elevated platform surface above the work surface platform;	**YES:** Clarke in view of Lindahl, and in further view of Clark discloses a platform element sitting on the work surface platform, the platform element including an elevated platform surface above the work surface platform.

[80] Lindahl, Figure 1, annotated

A POSITA would easily recognize that a platform element is ordinarily and commonly placed on a work surface platform. Both Clarke and Lindahl concern lift tables, and it is fair to say that a table's most important function is to provide a surface on which other items can be placed, and it is common that such an item would be a platform element. For example Clark discloses a platform element specifically as an option for being placed on another surface such as a desk, dining table, or the like.

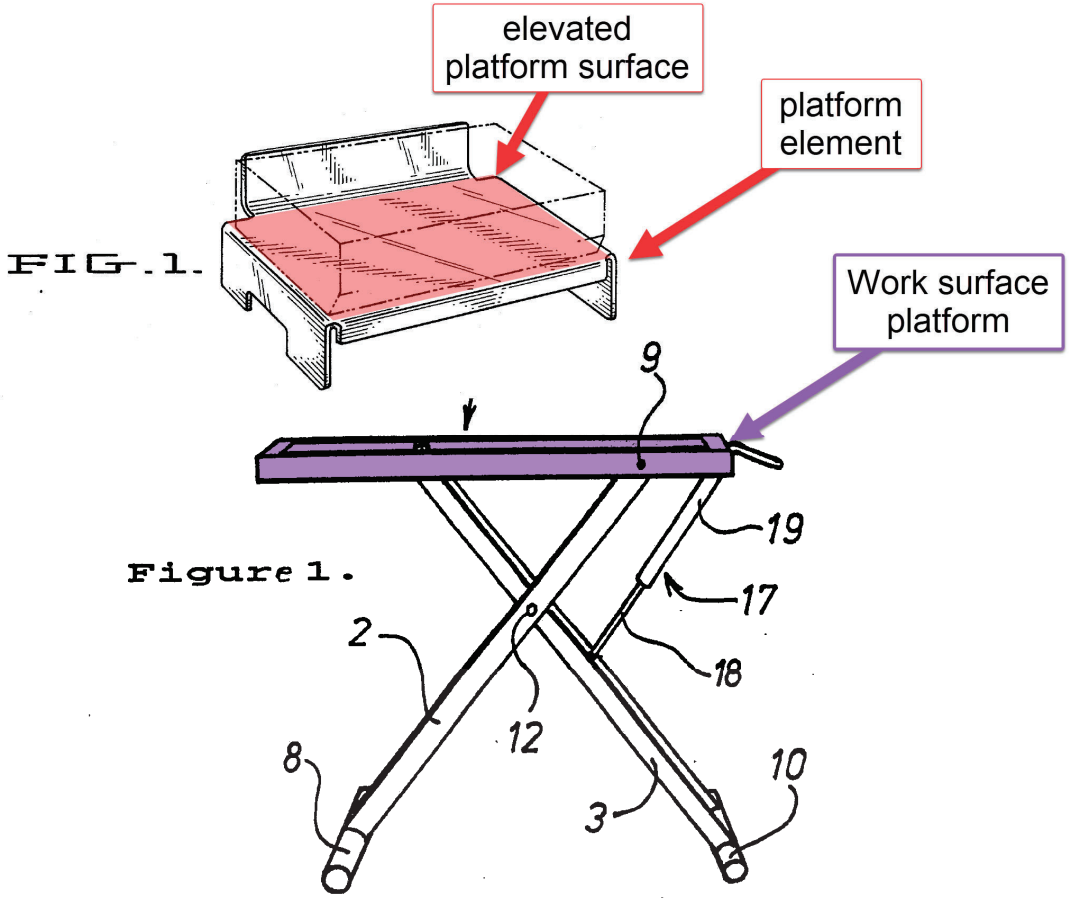

[81]

As shown previously, Clark discloses an elevated platform surface configured to be placed on another surface. Specifically, Clark states:

[81] Clark, Figure 1 and Lindahl, Figure 1, Annotated

"The ornamental design for a computer printer stand, as shown and described." Clark, pg. 1

As discussed previously, POSITA would understand that a printer stand is commonly placed on another surface such as a desktop, table or the like. When this is done, the printer stand of Clark will include an elevated platform surface above the work surface platform. A POSITA will recognize that this elevated platform surface is configured to support a printer or other electronic device or any suitable object placed thereon. Though possible, it would be atypical to merely place a small printer stand, such as disclosed by Clark, on the floor as this would still require users to stoop in order to interact with the printer. A POSITA will be familiar with the purpose of using a small printer stand such as disclosed by Clark, which is to elevate the printer sufficient to provide easier access to printed papers it dispenses. That a printer stand, such as Clark, is on par with the size of a small printer make it less expensive and more versatile as an end user has greater optionality as to where to put it.

1c. a base configured to sit on an existing platform; and	**YES:** Clarke in view of Lindahl discloses a base configured to sit on an existing platform.

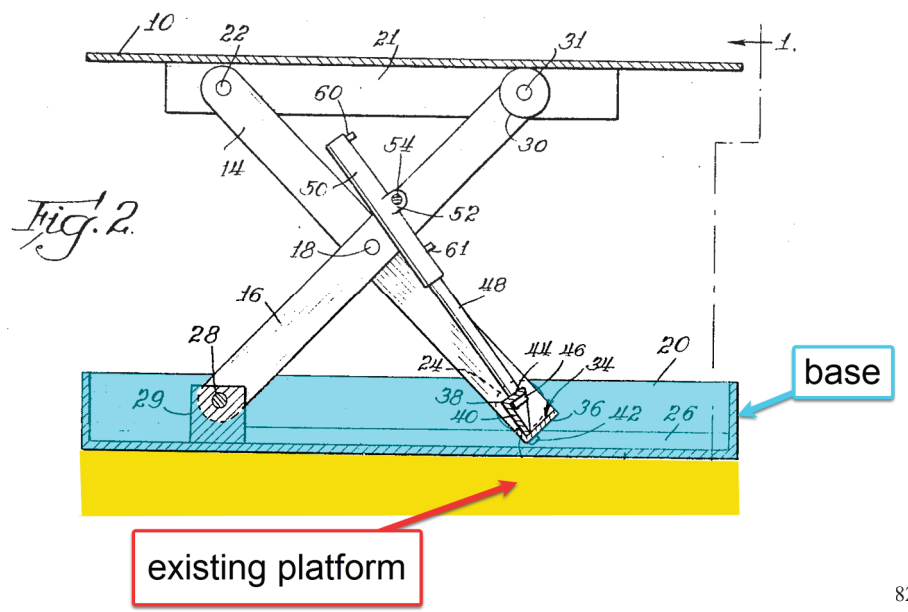

[82]

"Referring now more particularly to the drawings, the invention comprises a lift table having a top 10 and a base 12 connected by crossed scissors legs 14 and 16 at each side." Clarke 1:67-70

[82] Clarke, Figure 2, Annotated

As shown, above, Clarke discloses a base which supports the Clarke mechanism on the floor, i.e. an existing platform. Whether the floor is a base floor or a floor several stories up, a POSITA will easily recognize that a floor is an existing platform. For example, the foundation of a house comports with the plain and ordinary meaning of "platform" which is "A horizontal surface raised above the level of the adjacent area."[83]

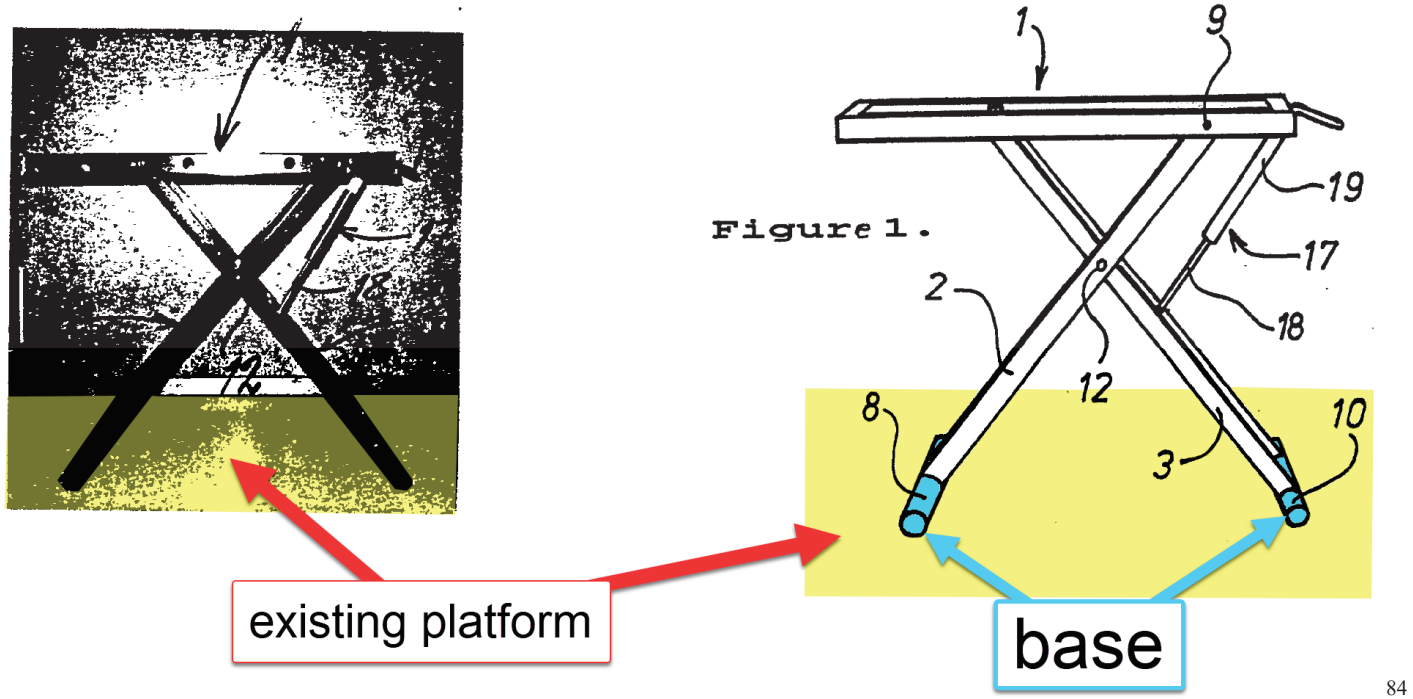

[84]

As shown previously, Lindahl discloses that their work surface platform is configured to be used in caravans and motorhomes.

"The present invention relates to ***a table stand intended for use preferably in caravans and motorhomes,*** *wherein the stand supports at the top thereof a frame-like part on which a tabletop is intended to be placed… Firstly the table is intended for use as a conventional dining table…" Lindahl 1:3-6, 13-14 (emphasis added)*

[83] <https://www.ahdictionary.com/word/search.html?q=platform> accessed Dec 27, 2024
[84] Lindahl, Figure 1, Annotated

"Each leg member 2, 3 includes two substantially parallel rods or bars 4, 5; 6, 7, wherein the two bars of each pair of bars are spaced from one another and are connected together at both ends thereof by means of a respective transverse rod 8, 9; 10, 11, wherein ***<u>the lowermost transverse rods 8; 10 function to support the stand against the underlying support surface</u>****..." Lindahl 3:3-10 (emphasis added)*

A POSITA will recognize that the floor of a caravan or motorhome is an existing platform on which the desk is taught to be used. The floor of a caravan or motorhome is a large flat surface consistently held at a height elevated from the ground. Lindahl also has a base in the form of transverse rods 8 and 10. The base supports the stand against the underlying support surface (i.e. existing platform).

1d. a height adjustment mechanism connecting the work surface platform and the base, the height adjustment mechanism including:	**YES:** Clarke in view of Lindahl discloses a height adjustment mechanism connecting the work surface platform and the base.

Clarke discloses a height adjustment mechanism and a base:

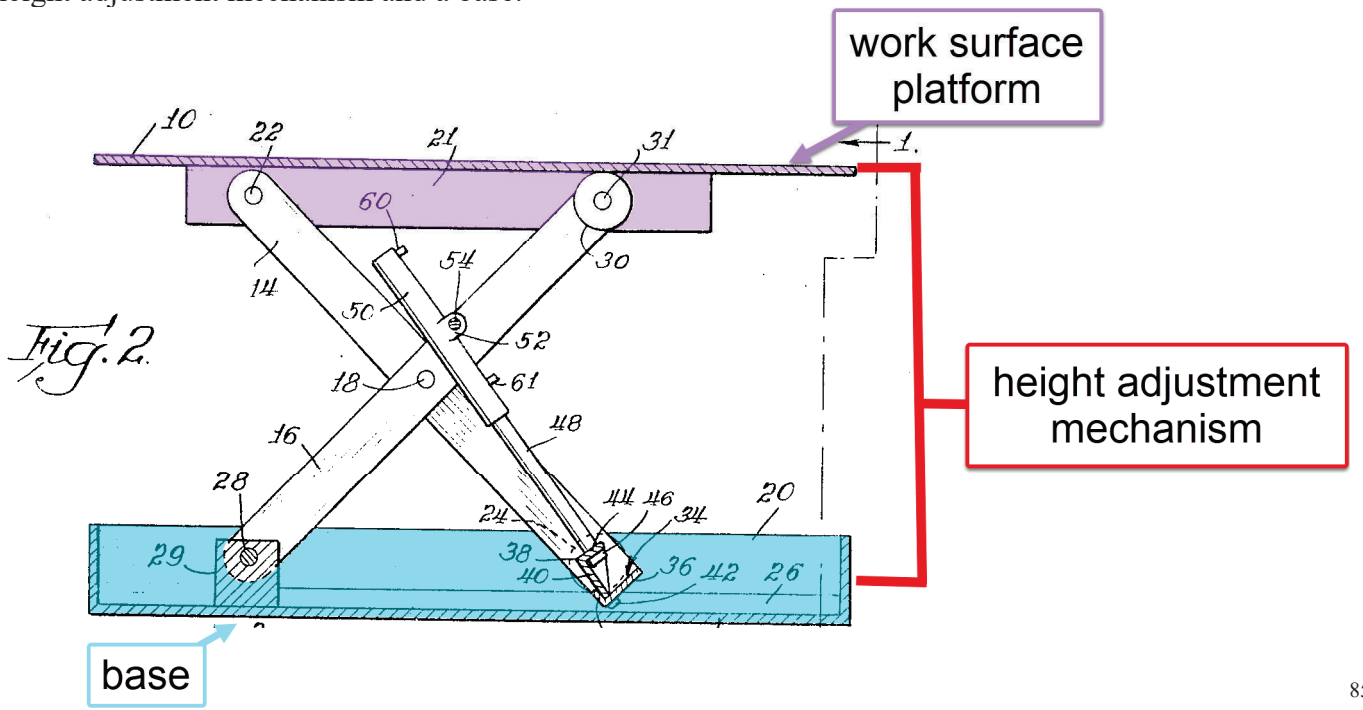

[85]

[85] Clarke, Figure 2, Annotated

"This invention relates to the operation of a scissors lift in changing it from a down or closed position to up or open position. It is particularly employed in connection with lift tables and the like." Clarke 1:8-11

"Referring now more particularly to the drawings, the invention comprises a lift table having a top 10 and a base 12 connected by crossed scissors legs 14 and 16 at each side." Clarke 1:67-70

The Lindahl mechanism also uses a combination of a scissor linkage and a gas spring to serve as a height adjustment mechanism. As discussed previously, a POSITA would be motivated to combine Lindahl with the base as disclosed by Clarke. In this combination, the height adjustment mechanism connects the work surface platform to the more substantial base of Clarke which distributes the load more evenly than the base of Lindahl.

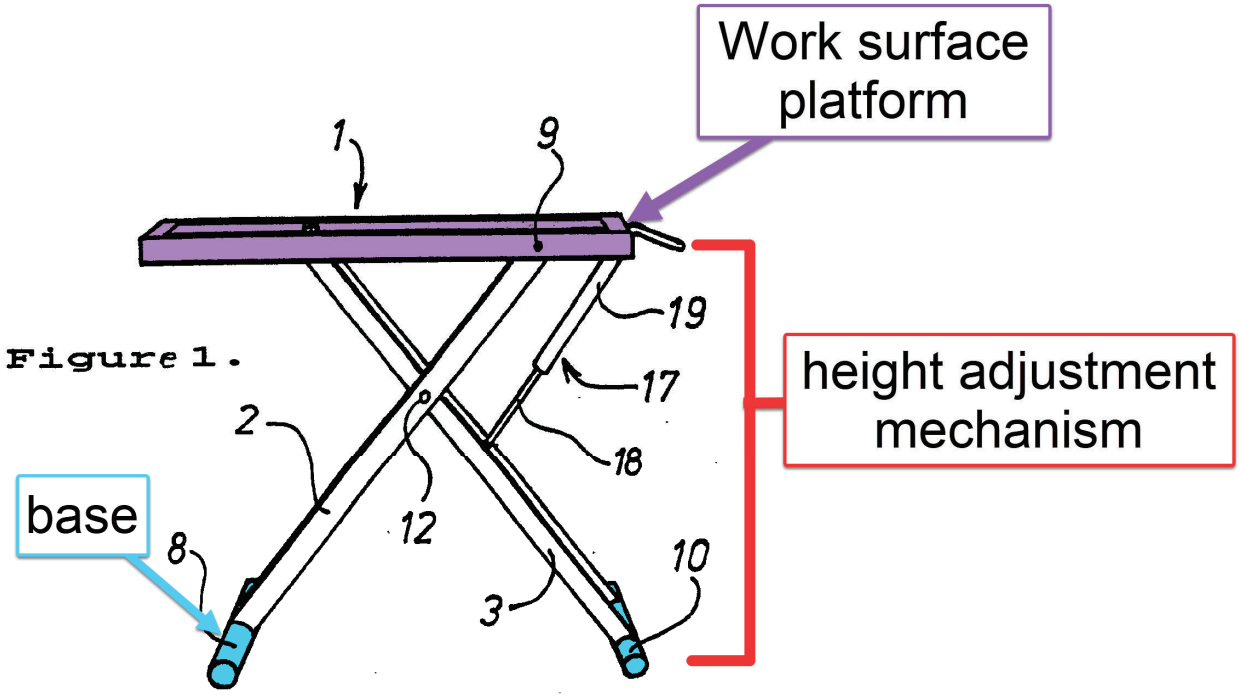

[86]

"A gas-spring, or piston-cylinder device, so arranged in the stand ***as to enable the frame-like part of said stand to be adjusted vertically, both downwardly and upwardly****, wherein the gas-spring can be blocked in its position, so as to maintain the position of the frame-like part and therewith the position of the*

[86] Lindahl, Figure 1, Annotated

tabletop in relation to the underlying supporting surface. This enables the frame-like part, and therewith the tabletop, to be adjusted continually to any selected vertical position, in which position the gas-spring is locked." Lindahl 2:12-22 (emphasis added) *"The stand includes at least two leg members which are hinged or pivotally connected together such as to enable the parts of said leg members located on mutually opposite side of the hinge or pivot to be moved towards and away from one another in a scissor-like fashion." Lindahl 1:30-35* As shown above, both Clarke and Lindahl disclose a height adjustment mechanism that connects the work surface platform and the base. A POSITA will recognize that both Clarke and Lindahl use a scissor linkage in combination with a cylinder style force actuator and that the height adjustment mechanism of Clarke could be used in the Lindahl mechanism and vice versa.	
1d1. a first set of pivot arms that connect at a scissoring pivot point creating a scissoring motion when raising and lowering the work surface platform to various heights;	**YES:** Both Clarke and Lindahl have a first set of pivot arms that connect at a scissoring pivot point creating a scissoring motion when raising and lowering the work surface platform to various heights.
The pivot arms below are part of the height adjustment mechanism:	

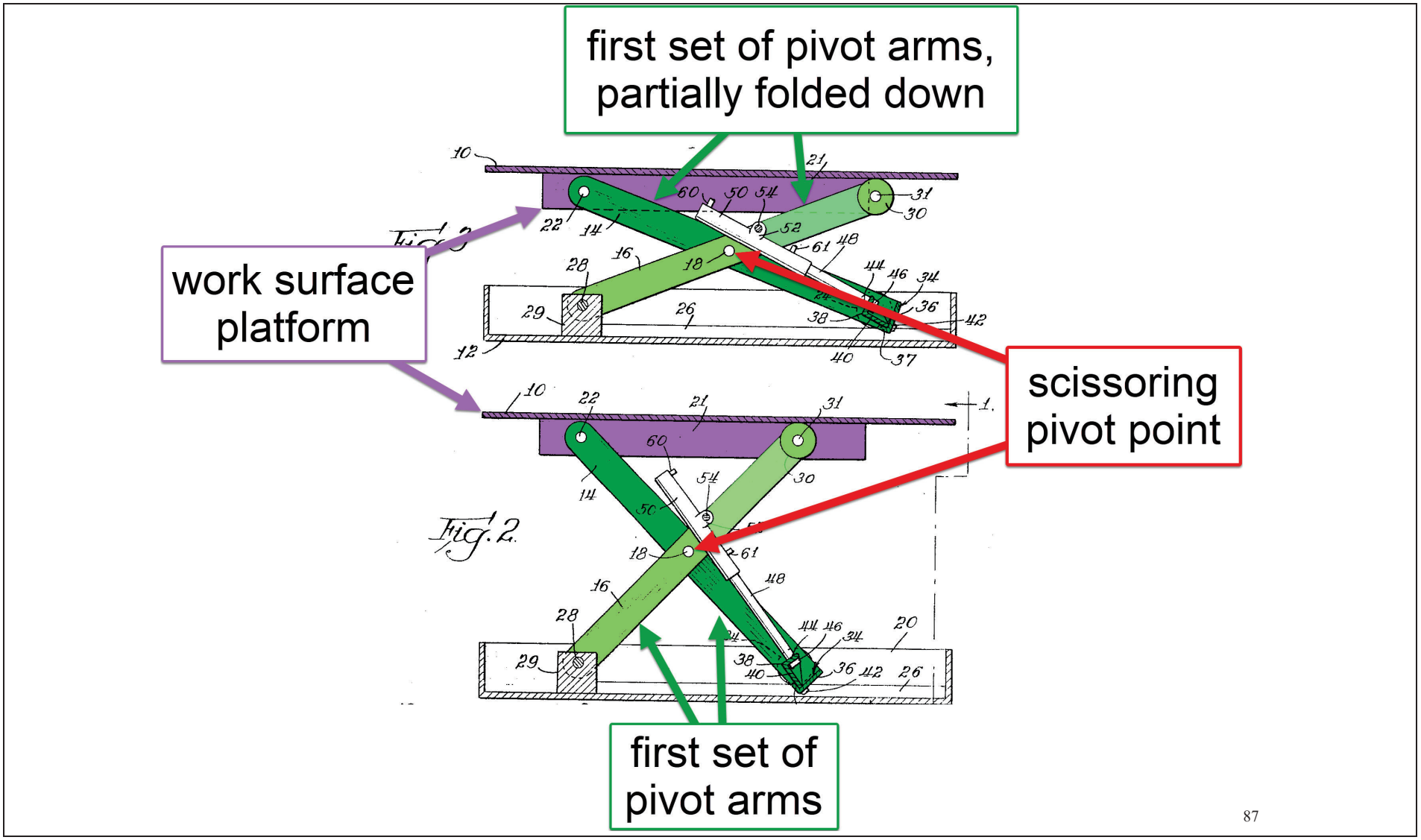

87

[87] Clarke, Figure 2 & 3, Annotated

As shown above, Clarke discloses a first set of pivot arms that connect at a scissoring pivot point creating a scissoring motion when raising and lowering the work surface platform to various heights.

"Referring now more particularly to the drawings, the invention comprises a lift table having a top 10 and a base 12 connected by crossed scissors legs 14 and 16 at each side. Legs 14 and 16 are pivotally connected at 18." Clarke 1:67-70

As shown in the citation above, the Clarke mechanism discloses a first set of pivot arms (scissor legs 14 and 16). These are connected in a linkage making a scissor mechanism which is used to lift the table and to set it at various heights. As the lifting mechanism is moved up and down, the pivot arms move with a scissoring motion. Between Figures 2 and 3 the same mechanism is shown in two different states of lift (i.e. various heights). By comparing the positions of the pivot arms, it can clearly be seen that scissoring motion takes place to move the lift mechanism from the position shown in Figure 2 to the position shown in Figure 3.

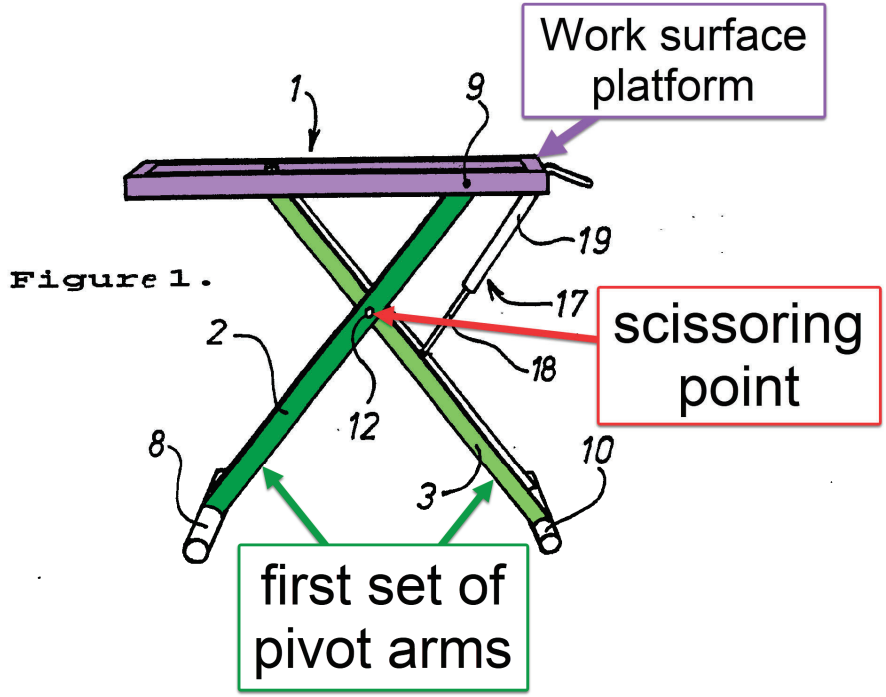

[88]

[88] Lindahl, Figure 1, Annotated

As shown above, Lindahl also has a first set of pivot arms, items 2 and 3 above. These legs connect at a scissoring point at pin 12. Together, these legs and pin create a scissoring motion when raising and lowering the work surface to various heights. *"Figures 1 and 2 illustrate the inventive stand. The stand includes a frame-like part 1 which is* ***carried by two leg members 2, 3****. … **The two leg members 2, 3**, i.e. the pairs of bars 4, 5; 6, 7 **are mutually connected by means of a hinge means or pivot in the form of a transverse rod 12**, which extends through the bars approximately midway therealong the rods, preferably at a location which is slightly above centre. **This enables the two ends of respective pairs of bars 4, 5; 6, 7 to be moved towards and away from each other in a scissor-like fashion and therewith move the frame-like part 1 vertically.**"* (Lindahl 3:1-3, 11-20, emphasis added) *"The present invention relates to a table stand for use preferably in caravans and motorhomes, wherein the top of the stand is provided with a frame-like part on which a tabletop is intended to be placed and which is* ***adjustable in the height direction so that the tabletop can be adjusted vertically to different positions****." Lindhal, Abstract* As shown in the citations above, the Lindahl mechanism has a first set of pivot arms that connect at a scissoring point. These leg members form a scissor mechanism that adjusts the work surface platform to various heights. A POSITA would understand that scissor mechanisms are suitable for vertical lifting applications such as Clarke and Lindahl. Scissor mechanisms are well-known and are very commonly built with two sets of pivots arms.	
1d2. a second set of pivot arms;	**YES:** Both Clarke and Lindahl discloses a second set of pivot arms.

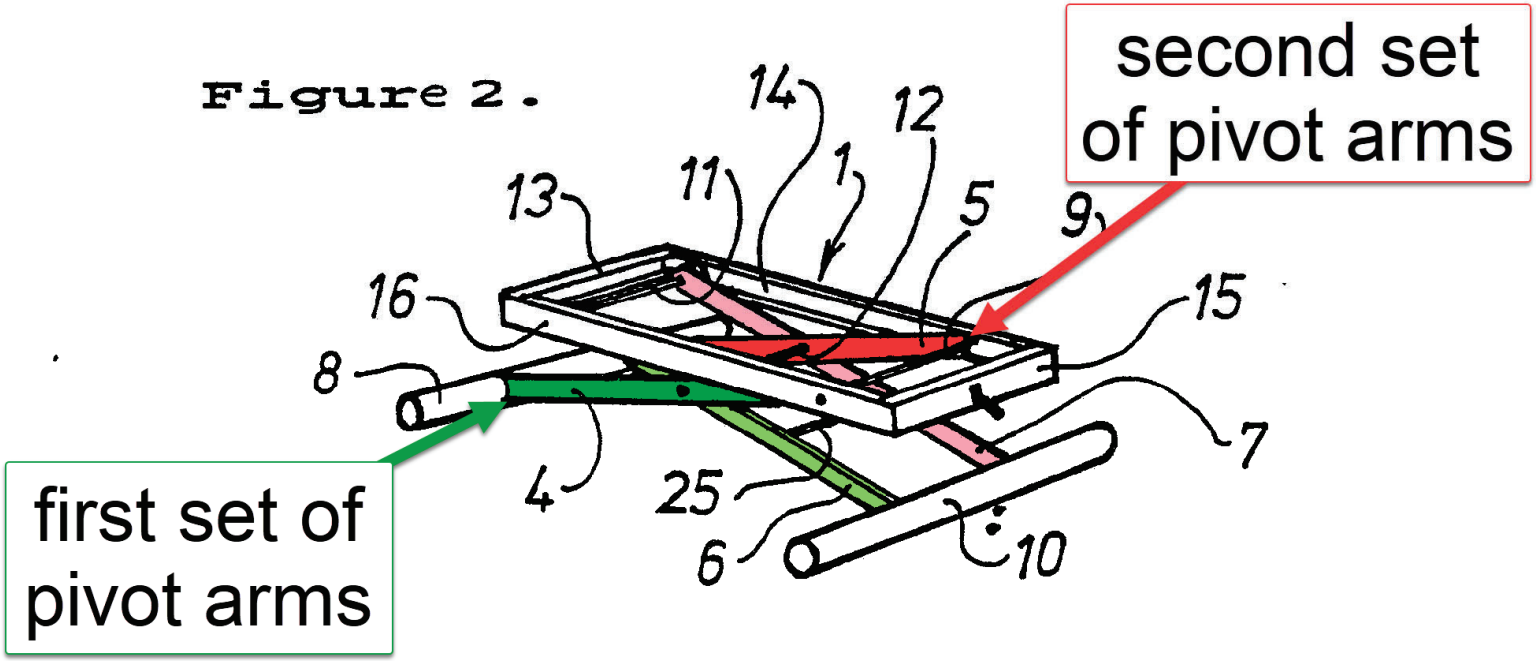

[89]

"…The pairs of bars 4, 5; 6, 7 are mutually connected by means of a hinge means or pivot in the form of a transverse rod 12, which extends through the bars approximately midway therealong the rods, preferably at a location which is slightly above centre. This enables the two ends of respective pairs of bars 4, 5; 6, 7 to be moved towards and away from each other in a scissor-like fashion and therewith move the frame-like part 1 vertically." (Lindahl 3:12-20)

As shown above Lindahl has a first and a second set of pivot arms. They are connected to each other and move in a scissor-like fashion. A POSITA will understand that this is a scissor lift mechanism of typical and ordinary design. A POSITA will further understand and be familiar with the fact that scissor lift mechanisms such as a common scissor lift machine or even this small table as disclosed by Lindahl are commonly built with a pair of scissoring links. This provides lateral stability to the machine over what would be typical of a single set of scissoring links.

Clarke also discloses a first and a second set of pivot arms as shown below:

[89] Lindahl, Figure 2, Annotated

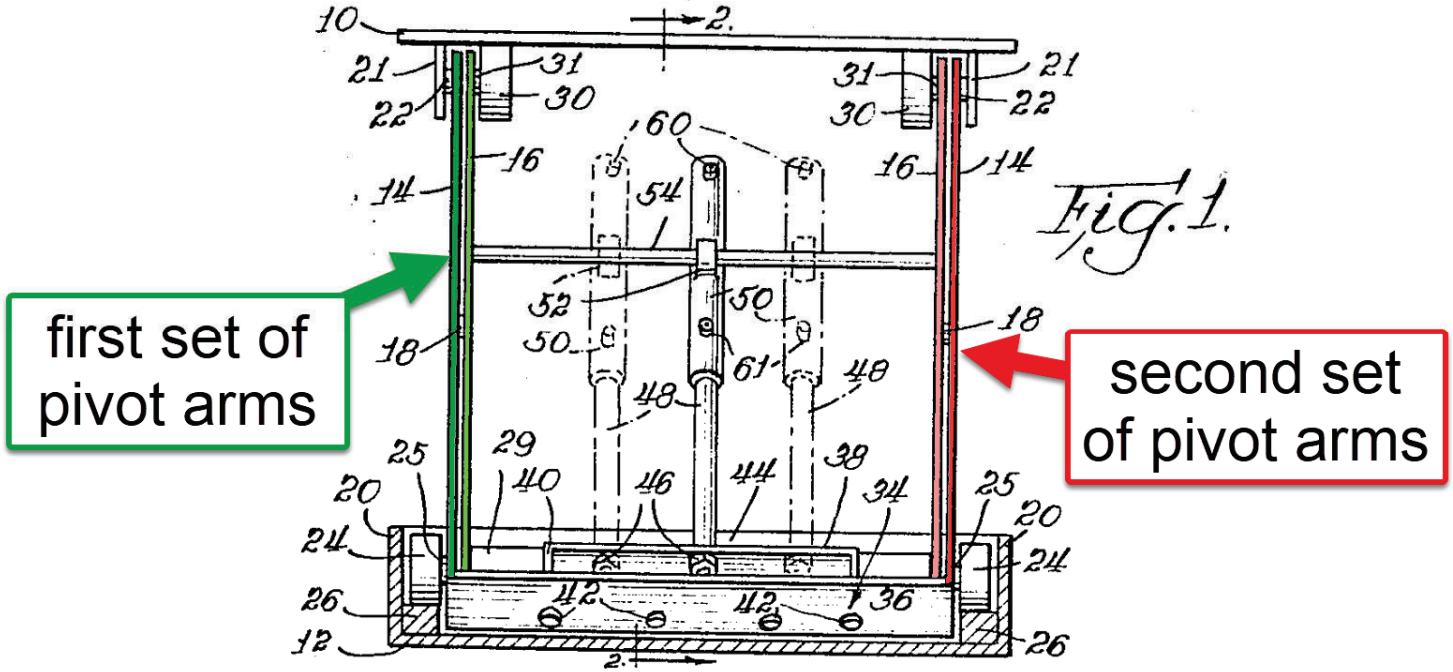

[90]

"Referring now more particularly to the drawings, the invention comprises a lift table having a top 10 and a base 12 connected by crossed scissors legs 14 and 16 at each side. Legs 14 and 16 are pivotally connected at 18." Clarke 1:67-70

1d3. an element that connects the first set of pivot arms to the second set of pivot arms;	**YES:** Both Clarke and Lindahl disclose an element that connects the first set of pivot arms to the second set of pivot arms.

[90] Clarke Figure 1, annotated

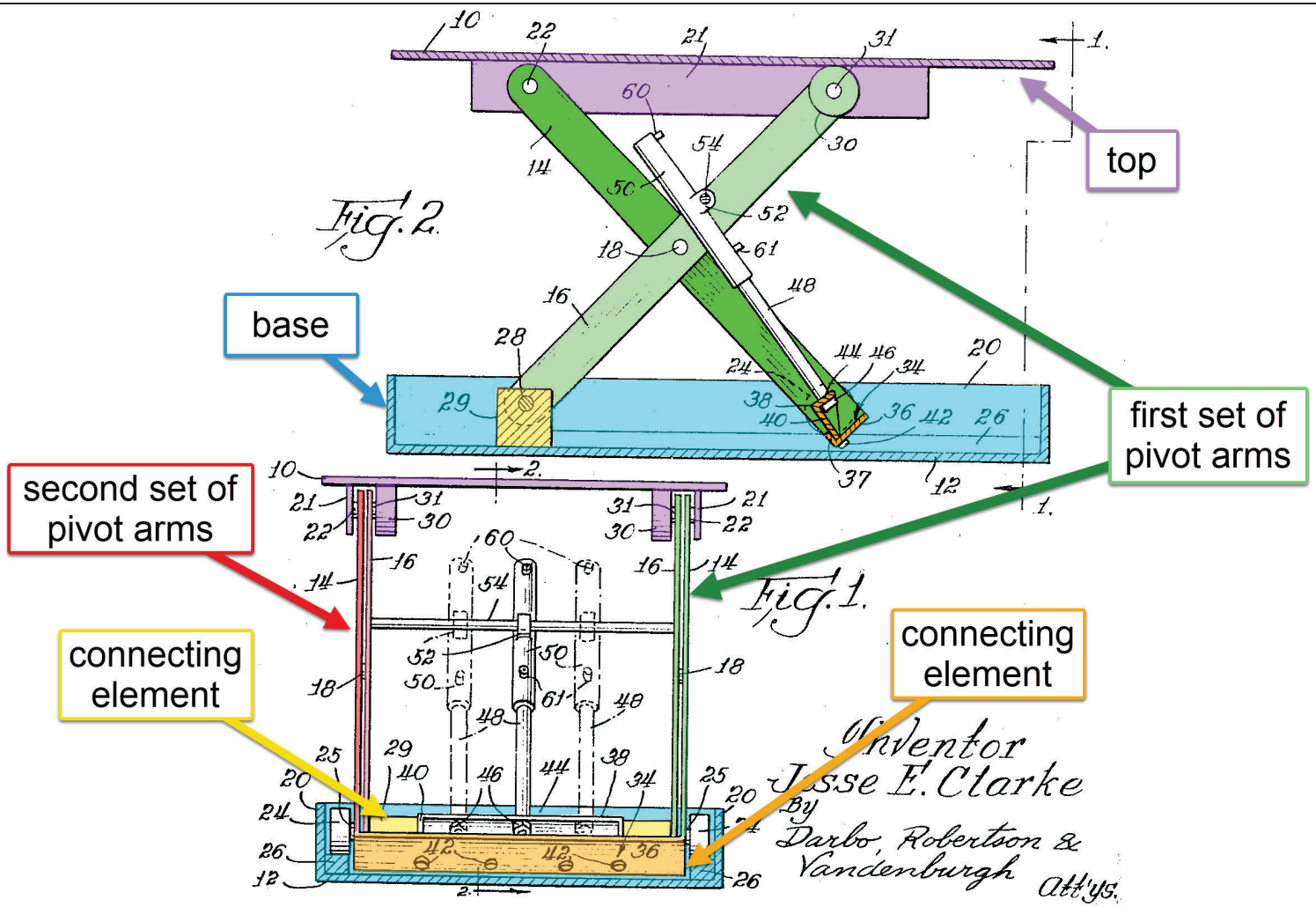

91

[91] Clarke Figures 1 & 2, Annotated

"Attached to the roller ends of the outer legs 14 is a cross piece 34 which may be in the form of an angle bar having one web 36 extending across the bottom ends of legs 14 with a shorter web 37 normal thereto." Clarke 2:15-18

"Depending from the top, at each side, is a plate 21. A pivot 22 near one end of the plate 21 connects the upper end of the leg 14 to the plate. Leg 14 has a roller 24 rotatably mounted at the other end on shaft 25. Roller 24 rides on the upper surface of a strip 26 in the bottom of one side of the base 12. One end of the other leg 16 has a pivot 28 connecting it to a support block 29 directly below the pivot 22 for the leg 14." Clarke 2:3-10

As shown above, Clarke discloses multiple elements that connects the first set of pivot arms to the second set of pivot arms. These include the pivot joint on the top frame (item 22), the angle bars at the bottom of the pivot arms (item 34 shown in orange), and the base pivot joint (item 28) via the support block (item 29 shown in yellow).

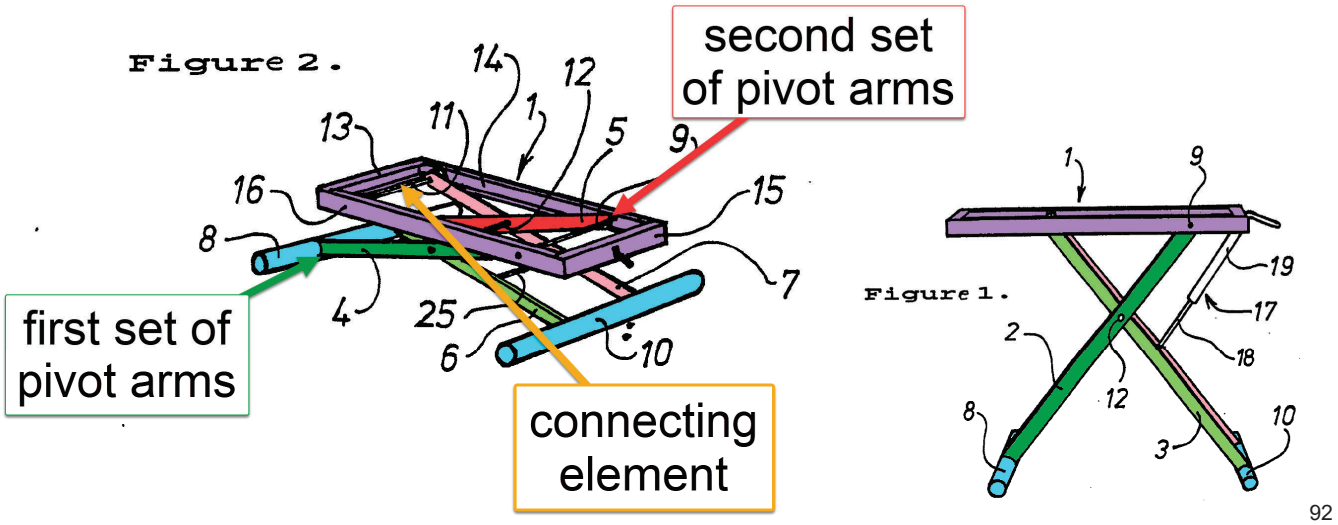

[92]

"...The pairs of bars 4, 5; 6, 7 are mutually connected by means of a hinge means or pivot in the form of a transverse rod 12, which extends through the bars approximately midway therealong the rods, preferably at a location which is slightly above centre. This enables the two ends of respective pairs of bars 4, 5; 6, 7 to be moved towards and away from each other in a scissor-like fashion and therewith move the frame-like part 1 vertically." (Lindahl 3:12-20)

[92] Lindahl Figure 1 and 2, combined and annotated

*"Each leg member 2, 3 includes two substantially parallel rods or bars 4, 5; 6, 7, **wherein the two bars of each pair of bars are spaced from one another and are connected together at both ends thereof by means of a respective transverse rod 8, 9; 10, 11**; wherein the lowermost transverse rods 8; 10 function to support the stand against the underlying support surface …" Lindahl 3:3-10 (emphasis added)* As shown above, Lindahl also discloses multiple elements that connects the first set of pivot arms to the second set of pivot arms. For example, transverse rod 11 connects the first and second set of pivot arms to each other. Further, transverse rod 12 extends between the sets of pivot arms, connecting them. Further the top frame (item 1) and associated pivots also connect the first and second scissor linkages to each other. Further still, the transverse rods 8, and 10 of Lindahl connect the first set of pivot arms to the second set of pivot arms. A POSITA will understand that these connecting elements are a typical and ordinary part of the design for scissor lift mechanisms and any one of these components in both Clarke and Lindahl are elements that connect the first set of pivot arms to the second set of pivot arms.	
1d4. a base pivot point fixed relative to the base and connecting the base and the first set of pivot arms;	**YES:** Clarke discloses a base pivot point fixed relative to the base and connecting the base and the first set of pivot arms.

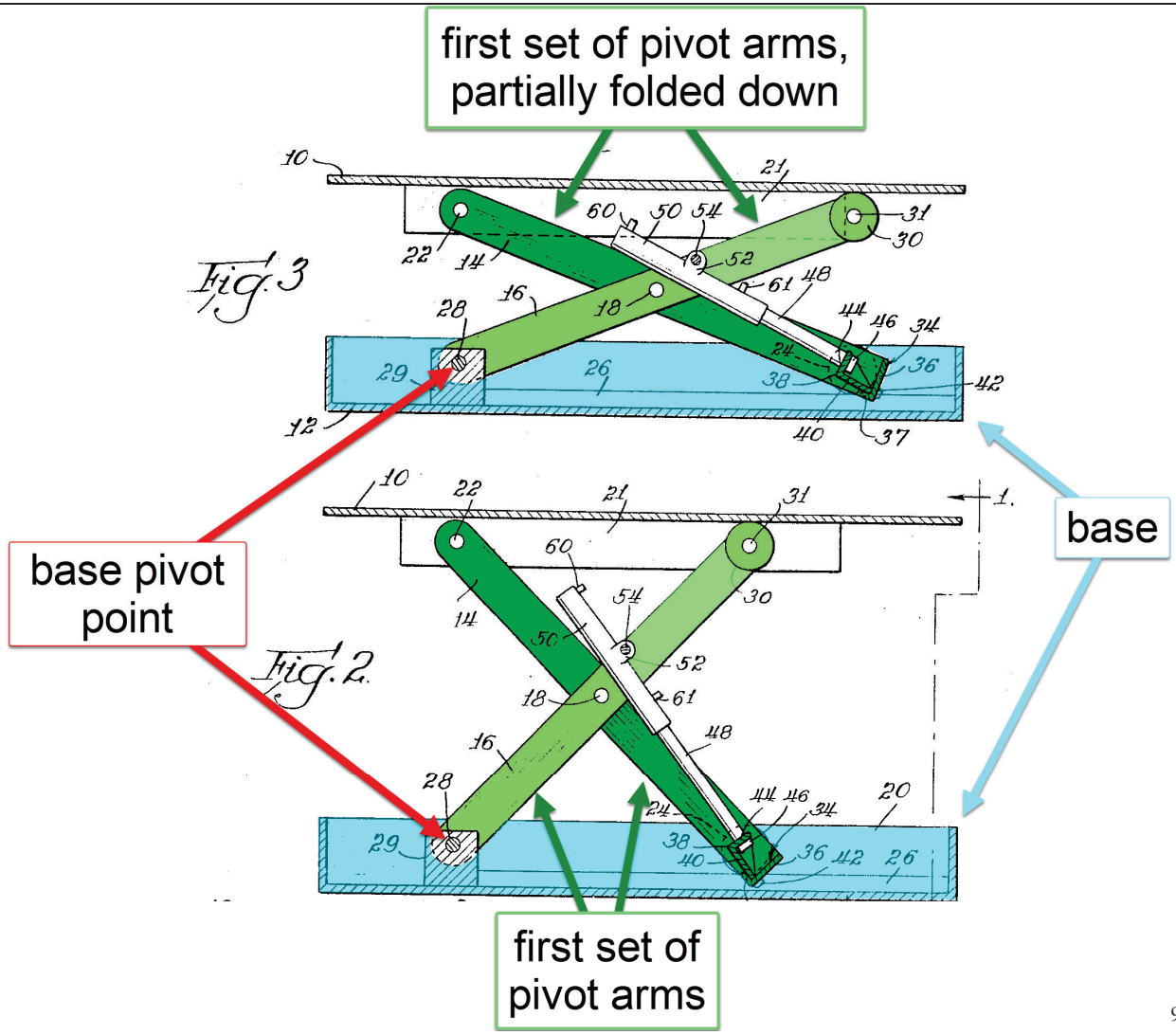

93

[93] Clarke, Figure 2 & 3, Annotated

"Depending from the top, at each side, is a plate 21. A pivot 22 near one end of the plate 21 connects the upper end of the leg 14 to the plate. Leg 14 has a roller 24 rotatably mounted at the other end on shaft 25. Roller 24 rides on the upper surface of a strip 26 in the bottom of one side of the base 12. ***<u>One end of the other leg 16 has a pivot 28 connecting it to a support block 29</u>*** *directly below the pivot 22 for the leg 14. A roller 30 mounted on shaft 31 at the other end of leg 16 rides on the underside of the table top 10. The legs are closely folded together by the pivot 18 intermediate their ends, for parallel scissor action between the base and the top." Clarke 2:3-14 (emphasis added)* As shown above, Clarke discloses a base pivot point which connects the base and the first set of pivot arms. A POSITA will understand that this is ubiquitous with scissor lift mechanism design. It is a required part of any scissor lift mechanism that is fixed to a base as it is one of the main supports for the entire lift mechanism. As discussed previously, a POSITA would be motivated to combine the base of Clarke with the Lindahl mechanism.	
1d5. a platform pivot point fixed relative to the work surface platform and connecting the work surface platform and the first set of pivot arms;	**YES:** Both Clarke and Lindahl have a platform pivot point fixed relative to the work surface platform and connecting the work surface platform and the first set of pivot arms.

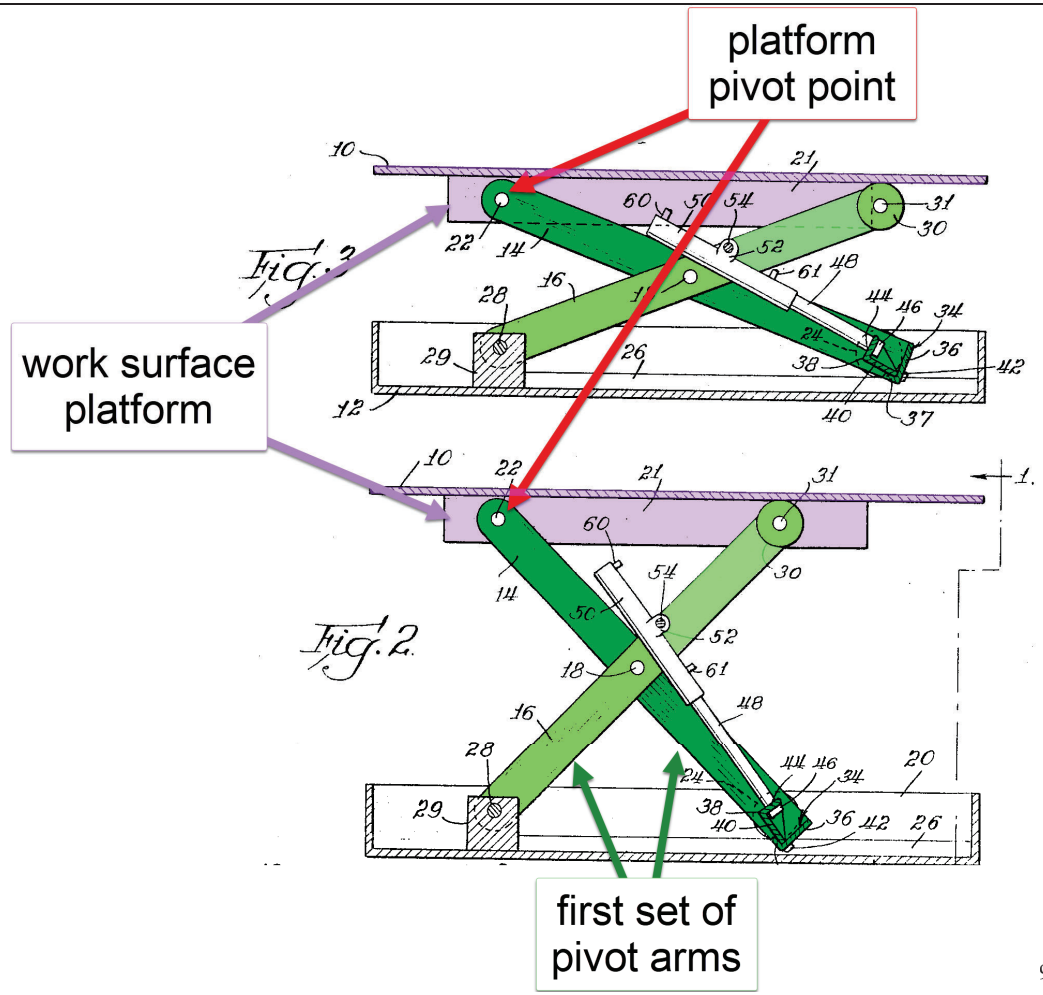

[94]

"Depending from the top, at each side, is a plate 21. ***<u>A pivot 22 near one end of the plate 21 connects the upper end of the leg 14 to the plate.</u>***" *Clarke 2:3-4 (emphasis added)*

[94] Clarke, Figure 2 & 3, Annotated

As shown in the figure above, Clarke discloses a platform pivot point as element 22 shown above. A POSITA will recognize that this design layout is universally used with scissor lift mechanisms. It is ubiquitous and well-known and therefore not inventive. Both Clarke and Lindahl simply provide yet one more example of this design layout.

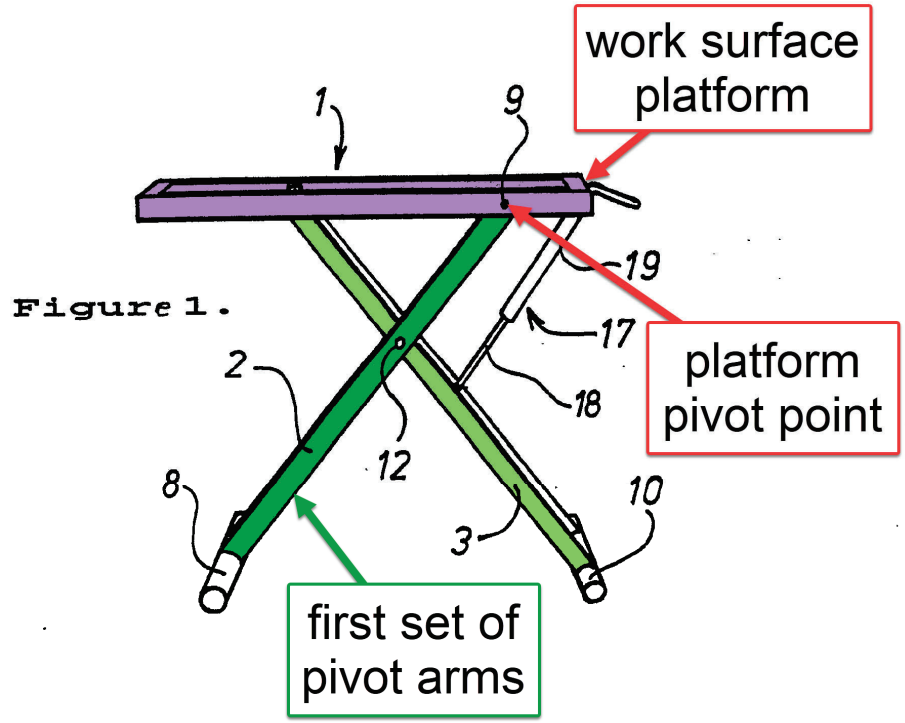

[95]

"Each leg member 2, 3 includes two substantially parallel rods or bars 4, 5; 6, 7, wherein the two bars of each pair of bars are spaced from one another and are connected together at both ends thereof by means of a respective transverse rod 8, 9; 10, 11, wherein the lowermost transverse rods 8; 10 function to support the stand against the underlying support surface and wherein the upper, transverse rods 9; 11 are intended to coact with the frame-like part 1." Lindahl 3:3-11

As shown in the figure and citation above, Lindahl also discloses transverse rod 9 which is a platform pivot point fixed relative to the work surface platform which connects the work surface platform to a first set of pivots arms. As discussed previously, this platform pivot point is

[95] Lindahl, Figure 1, Annotated

ubiquitous in scissor lift linkage design. Clarke and Lindahl both disclose it and a POSITA would understand this pivot point exists merely by knowing that a scissor lift mechanism is involved in the design.	
1d6. a sliding mechanism on an end of an arm of the first set of pivot arms between the end of the arm and either the work surface platform or the base;	**YES:** Both Clark and Lindahl disclose a sliding mechanism on an end of an arm of the first set of pivot arms between the end of the arm and either the work surface platform or the base.

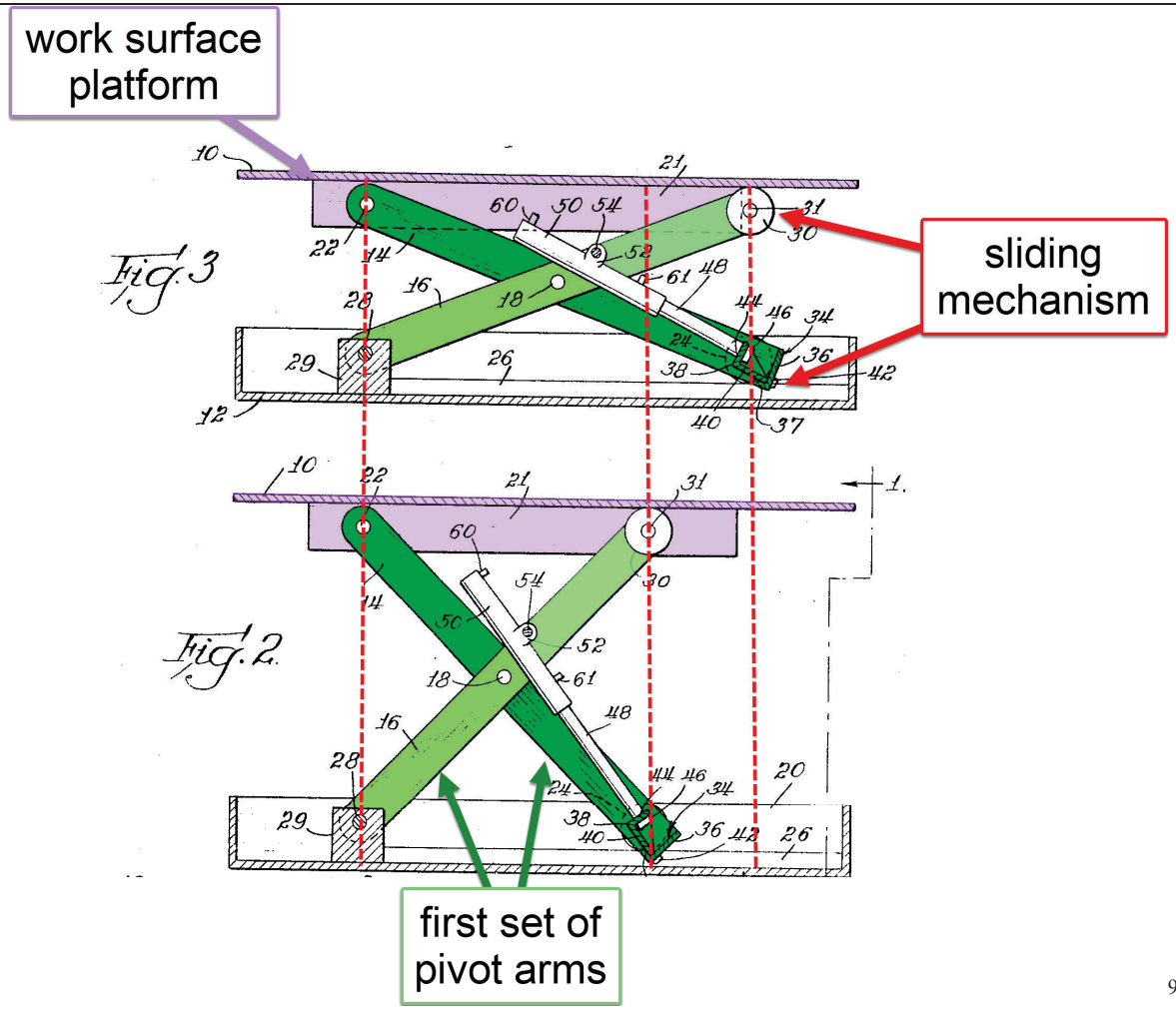

[96]

"Depending from the top, at each side, is a plate 21. A pivot 22 near one end of the plate 21 connects the upper end of the leg 14 to the plate. Leg 14 has a roller 24 rotatably mounted at the other end on shaft 25. Roller 24 rides on the upper surface of a strip 26 in the bottom of one side of the base 12. One end of the other leg 16 has a pivot 28 connecting it to a support block 29 directly below the pivot 22 for the leg 14. A roller 30

[96] Clarke, Figure 2 & 3, Annotated

mounted on shaft 31 at the other end of leg 16 rides on the underside of the table top 10. The legs are closely folded together by the pivot 18 intermediate their ends, for parallel scissor action between the base and the top." Clarke 23-14

As shown in the figure above, Clarke also discloses a sliding mechanism, a roller (item 30), on the end of a first set of pivot arms (item 16) that is between the end of the pivot arm and the work surface platform.

In addition, the set of rollers 24 and 30 allow for what the '843 patent considers to be sliding (i.e. translating) movement as is well-known and ubiquitous in the design of a common scissor lift linkage. It is kinematically necessary as a part of the design of a scissor lift linkage to allow these pivot points to move in this way. As will be shown later in the claim language, the term "sliding mechanism" must be interpreted to include rolling contact for example '843 patent claim element 11a reads "wherein the sliding mechanism includes a wheel mounted on the end of the arm of the first set of pivot arms." A POSITA would understand that a wheel is used for rolling contact which is typically different from sliding contact. Nevertheless, a POSITA would understand that scissor linkages can are often are made with rolling OR sliding contact and they function just the same. The only difference is that sliding contact has slightly more drag than rolling contact. This drag is commonly minimized for example through the use of low friction wear pad materials. For example, the Pop Up brand Push Pro scissor lift (available at least as early as July 2014) uses a sliding contact at the movable pivot of a scissor lift as opposed to a roller.[97] Clarke discloses an extremely common arrangement where these pivot points translate both in the top and the bottom. That is to say between the scissor links and the work surface platform as well as between the scissor links and the base.

[97] See Operators Manual - Pop Up - Push Pro.pdf, cover page, and Figures 8.14 and 8.15

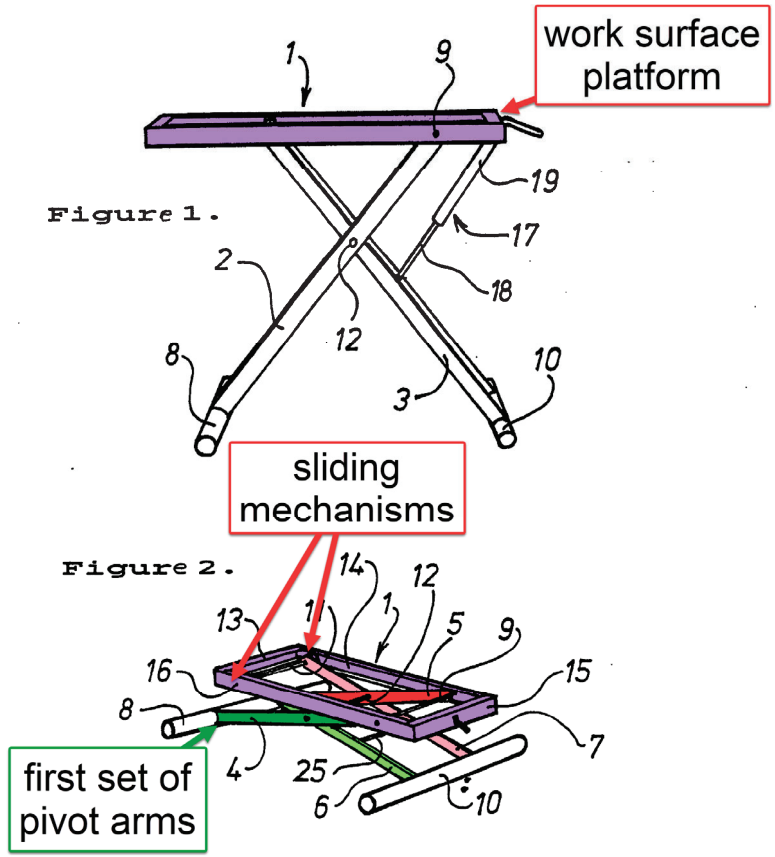

[98]

"The one rod 9 is pivotally mounted in the bars 14, 15, whereas the other ***transverse rod 11 is provided at both ends with suitable means for sliding in the U-shaped part of the bars*** *in order to achieve the aforesaid scissor-like movement of the leg members." Lindahl 3:31-4:3 (emphasis added)*

As shown above, Lindal also discloses a sliding mechanism on the end of the first set of pivot arms between the first set of pivot arms and the work surface platform.

[98] Lindahl Figures 1 and 2, combined and Annotated

1d7. a gas spring that assists in elevation of the work surface platform by applying a force to one of the first set of pivot arms as part of the scissoring motion,	**YES:** Clarke in view of Lindahl discloses a gas spring that assists in the elevation of the work surface platform by applying a force to one of the first set of pivot arms as part of the scissoring motion.

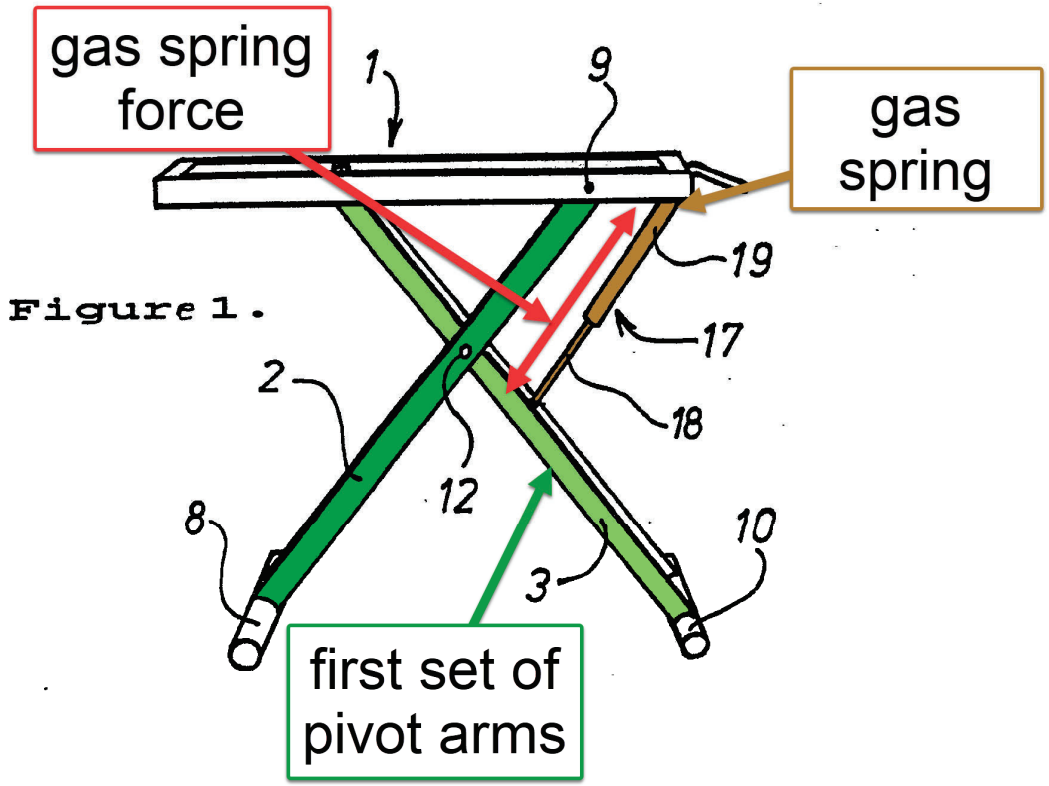

[99]

"An essential feature of the invention is that a blockable gas-spring 17, or piston-cylinder device is provided for enabling the position of the frame-like part 1 to be adjusted vertically in a smooth continuous fashion, both in an upward and in a downward direction. ***The gas-spring includes a bottom part 18 which is pivotally connected to the leg member 3*** *beneath the pivot rod 12, and an upper part 19 which is pivotally connected to the transverse frame-bar 15 on the same side of a vertical plane passing through the rod 12 as the lower part 18 (see also Figures 3, 4)." Lindahl 4:5-15 (emphasis added)*

[99] Lindahl, Figure 1, Annotated

As shown in the figure and the citation above, Lindahl discloses a gas spring that is used to facilitate the movement of the scissor linkage and therefore work surface platform. The gas-spring of Lindahl is connected between the work surface platform and the pivot arms. As such, it applies force to the pivot arms as well as the work surface platform as part of the scissoring motion. I further note that Lindahl provides yet another teaching of the interchangeability of a gas-spring and a hydraulic cylinder. As shown in the citation above, Lindhal states, "a blockable gas-spring 17, or piston-cylinder device." A POSITA would understand that a lockable gas-spring is a piston cylinder device. A POSITA would also understand that a hydraulic or pneumatic cylinder is a piston-cylinder device. Thus, the Clarke mechanism also shows a piston-cylinder device between the work surface platform and the pivoting links as is well-known in the typical and ordinary design of scissor lift mechanisms. A POSITA would understand that the fluid-power cylinder(s) of Clarke could be replaced with a gas spring. This would change the Clarke device from an actively driven scissor lift to an assisted but manually driven scissor lift, which would be desirable for lower load applications such as Lindahl teaches.

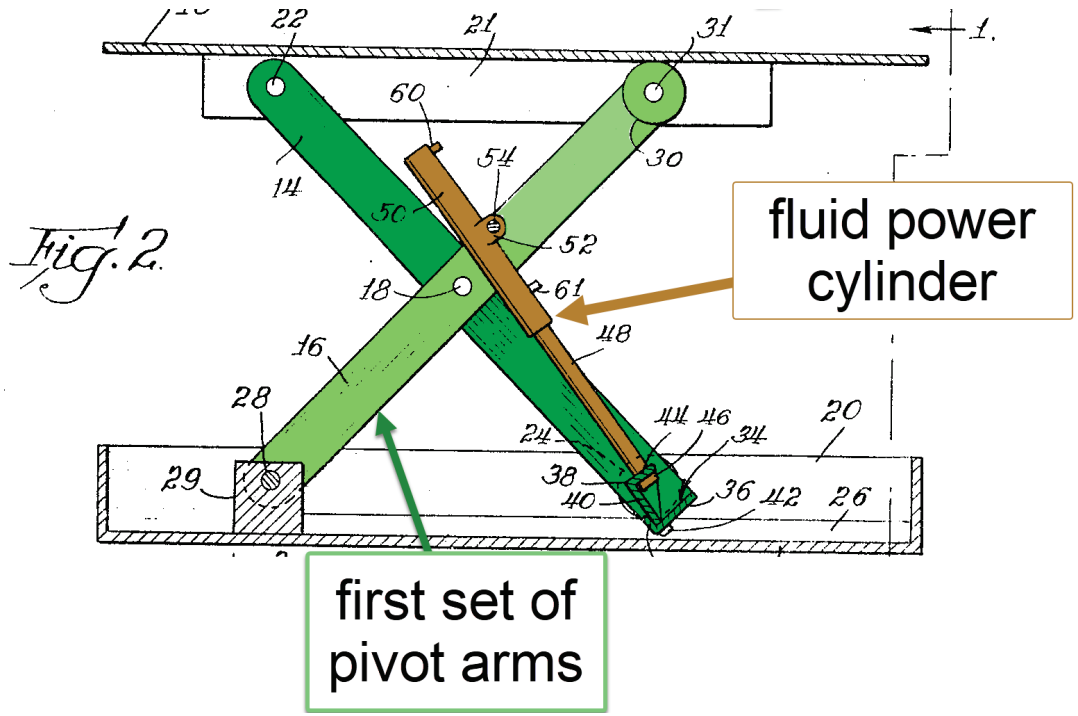

100

[100] Clarke, Figure 2, Annotated

"Cylinder 50 has a side mounting plate 52 pivotally mounted on a rod 54. Rod 54 extends between the two opposite legs 16 to which it is connected. It is located at the side of the cylinder 50 opposite the pivotal mountings formed by studs 42. This rod 54 is at the upper side of the legs 16 above the common pivot 18 for the legs (FIGURE 4), and the mountings 52 extend downwardly. In the down position the cylinders will be entirely below the upper edges of the legs 16 to which they are connected." Clarke 2:32-41 *"To **supply air or fluid pressure**, each cylinder 50 is provided with an inlet 60 near its outer end to Which some suitable connection (not shown) is made. Adjacent the other end is a pipe 61 which may be used as an exhaust, or connected to the pressure source through a suitable valving arrangement if the cylinder is to be double acting." Clarke 2:67-72* For at least the reasons previously discussed, a POSITA would be motivated to use the locking gas spring as taught in Lindahl with the Clarke mechanism. Thus, when this combination is made, it will have a gas spring that assists in the elevation of the work surface platform by applying force to one of the first set of pivot arms as part of the scissoring motion. This connection that makes the scissoring motion is made at pivot element 18 of Clarke as shown above.	
1d8. wherein one end of the gas spring is fixed to the work surface platform, and wherein the gas spring acts as a locking device that holds the work surface platform at various vertical heights above the base; and	**YES:** Clarke in view of Lindahl discloses that one end of the gas spring is fixed to the work surface platform, and wherein the gas spring acts as a locking device that holds the work surface platform at various vertical heights above the base.

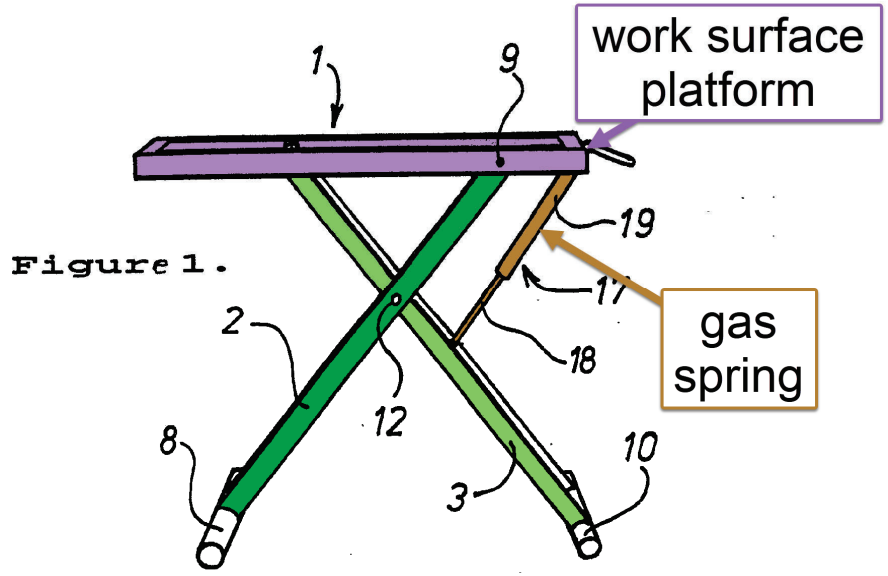

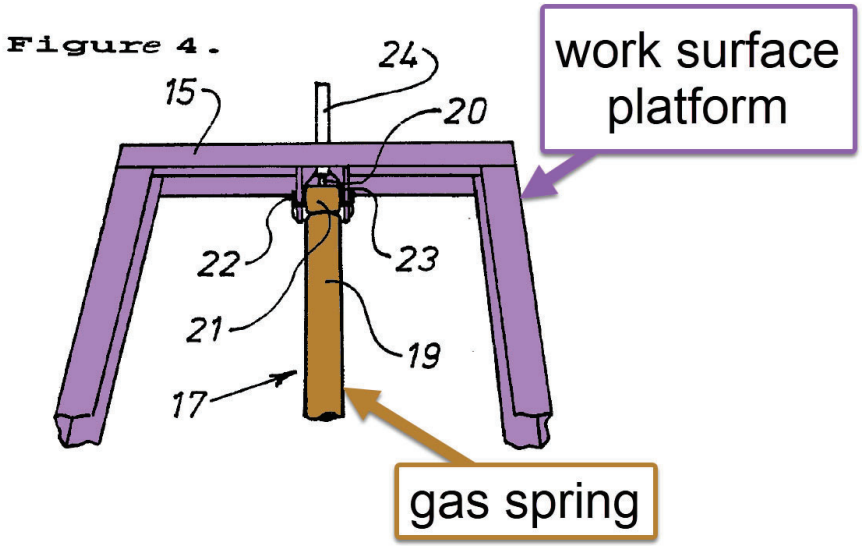

[101]

"An essential feature of the invention is that a blockable gas-spring 17, or piston-cylinder device is provided for enabling the position of the frame-like part 1 to be adjusted vertically in a smooth continuous fashion, both in an upward and in a downward direction. The gas-spring includes a bottom part 18 which is pivotally connected to the leg member 3 beneath the pivot rod 12, and an upper part 19 which is pivotally connected to the transverse frame-bar 15 on the same side of a vertical plane passing through the rod 12 as the lower part 18 (see also Figures 3, 4)." Lindahl 4:5-15

As shown above, Lindahl discloses the use of a gas spring to facilitate the movement of the scissor linkage. Specifically, the gas-spring cited is a locking gas-spring which as discussed previously is a well-known off-the-shelf component that any POSITA would be very familiar with. As Lindahl describes the locking gas spring is used to set the work surface platform at various heights in ordinary usage of the Lindahl apparatus. As discussed previously, Lindhal describes that any piston-cylinder actuator (an example of which is a locking gas spring) can be used with their machine. A POSITA will understand that a fluid power cylinder, such as used by Clarke is also a piston cylinder device that can be used to lock the vertical position of the platform at any height within its ordinary range of motion. A POSITA will understand that scissor lift mechanisms have a single degree of freedom and thus can be equivalently actuated by connecting an actuator between any two components that move relative to each other. For example, Lindahl as shown above connects a locking gas spring between the work surface platform and one of the arms of the first set of pivot arms. Clarke as shown in figure 2 connects the piston-cylinder style actuator between each of the arms in the first set of pivot arms. A POSITA will easily recognize this as a design choice and further that a scissor lift with equivalent performance could just as easily be

[101] Lindahl, Figure 1 & 4, Annotated

configured with the cylinder connected between the pivot arm and the work surface platform as taught in Lindahl. In addition to this though, a POSITA would recognize that it would be more advantageous to mount the locking gas spring with the actuated end in a fixed relationship with the work surface platform as taught by Lindahl. For example, a POSITA will recognize that the locking gas spring handle is most advantageously placed on the work surface platform, which provides greater ease of use for adjustment as opposed to connecting it between the legs. Combining the placement of the air spring of Lindahl with the Clarke mechanism would yield this same convenience of handle position.

1d9. a handle that unlocks the locking device in response to pressure applied by a user.	**YES:** Clarke in view of Lindahl discloses a handle that unlocks the locking device in response to pressure applied by a user.

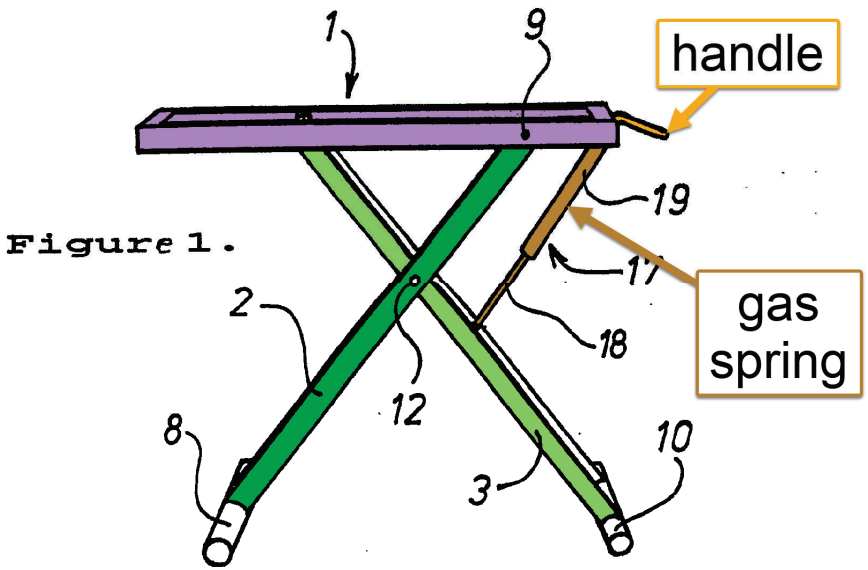

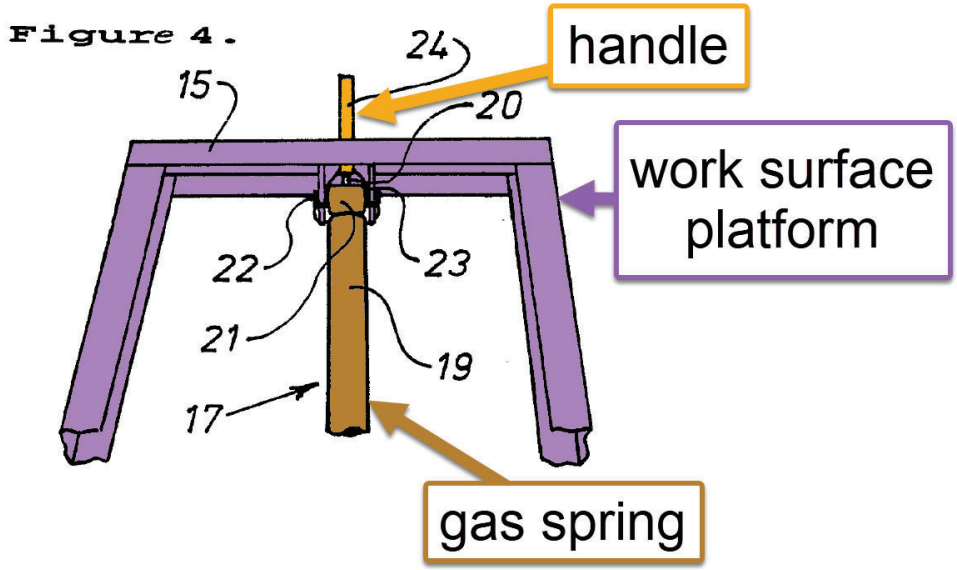

"The operating means 24 has an elongated shape and has a handle 26 provided on the rear thereof and a part 27 which function to engage the end of the pin 20 on the front thereof. ... This fact enables the gas-spring to be operated effectively. When the pin 20 is pressed inwardly by means of the operating means 24, the release valve in the gas-spring will open. The gas-spring is thereby compressed with a force which is greater than the resistance exerted by the gas-spring, which takes place when the stand is to be pressed down to a low level. If it is wished to maintain the stand at this low level, the pressure on the pin is removed, thereby causing the pin to return to its starting position. This closes the release valve in the gas-spring and the spring will thereby be blocked and function as a rigid rod. When wishing to raise the stand, the pin 20 is pressed-in by means of the operating means 24, thereby raising the frame part of the stand to the desired position, whereafter the pressure on the pin 20 is removed." Lindahl 5:8-6:8

As shown above, and as described in the citation above, the Lindahl mechanism is provided with a handle that unlocks the locking device (i.e. the locking gas spring). This is in response to the pressure applied by a user to the handle portion of operating means 24. As discussed previously, a POSITA would have been motivated to use the locking gas spring of Lindahl with the linkage arrangement of Clarke. As such, this handle used to selectively unlock the gas spring would be in the combination of Clarke in view of Lindhal as well.	
2P. The desktop workspace of claim 1,	**YES:** As shown above, Clarke in view of Lindahl, and in further view of Clark discloses the desktop workspace of claim 1.
2a. wherein the platform element further includes four legs that support the elevated platform surface above the work surface platform,	**YES:** Clark discloses that the platform element further includes four legs that support the elevated platform surface above the work surface platform.

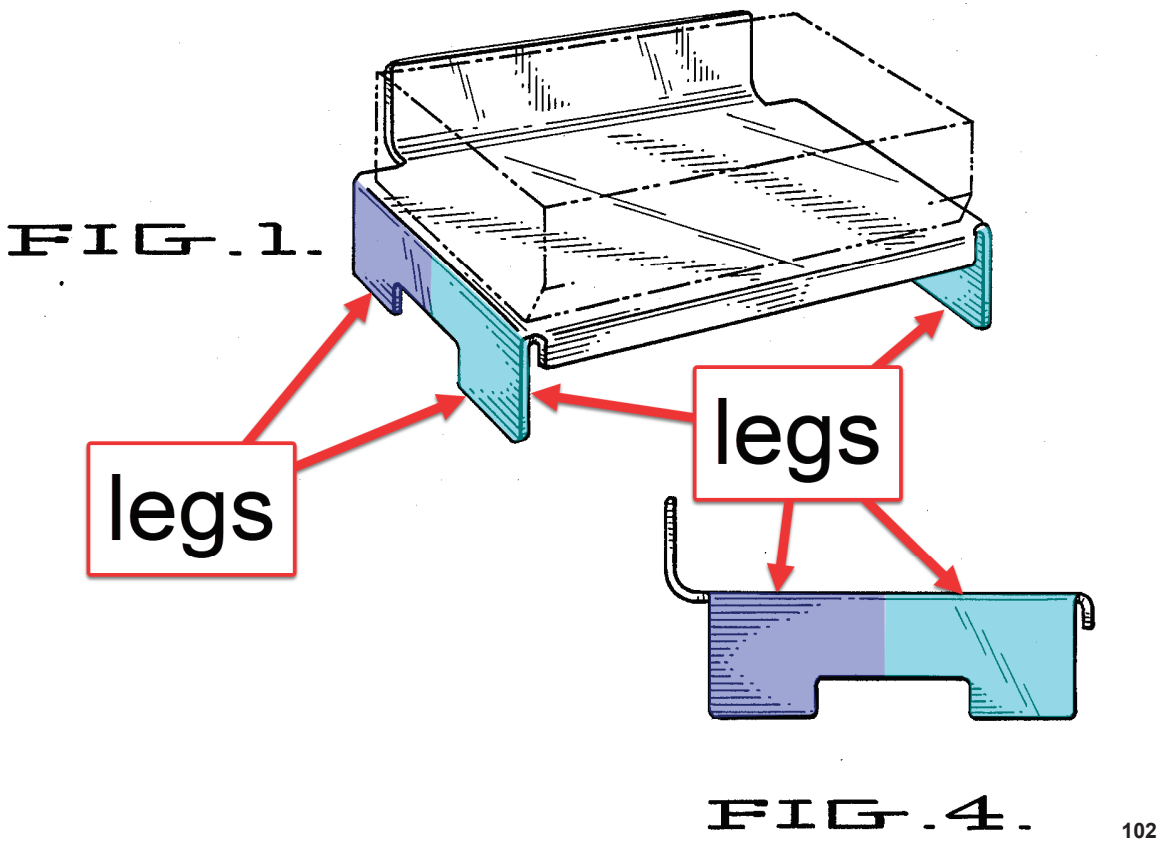

102

"Fig. 4 is a left side view, the right side being a mirror image of the left side shown;"[103]

As shown above, the Clark printer stand has four legs, i.e. there are four surfaces that will come into contact with any platform or surface the printer stand is placed on. These four legs extend from those surfaces up to the supported platform as shown in the figures above. The description of Figure 4 in Clark specifies that the Clark design is symmetric, i.e. the right side of Clark is a mirror image of the left side as shown in Figure 4. This clearly shows how the two most easily visible legs of Clark as shown in Figures 1 and 4 are mirrored on the opposite side i.e. there are another two legs on the other side of the Clark printer stand making for a total of four legs.

[102] Clark, Figures 1 & 4, Annotated
[103] US D308537, pg. 1

2b. each of the four legs being proximate to one of four corners of the elevated platform surface.	**YES:** Clark discloses that each of the four legs being proximate to one of the four corners of the elevated platform surface.

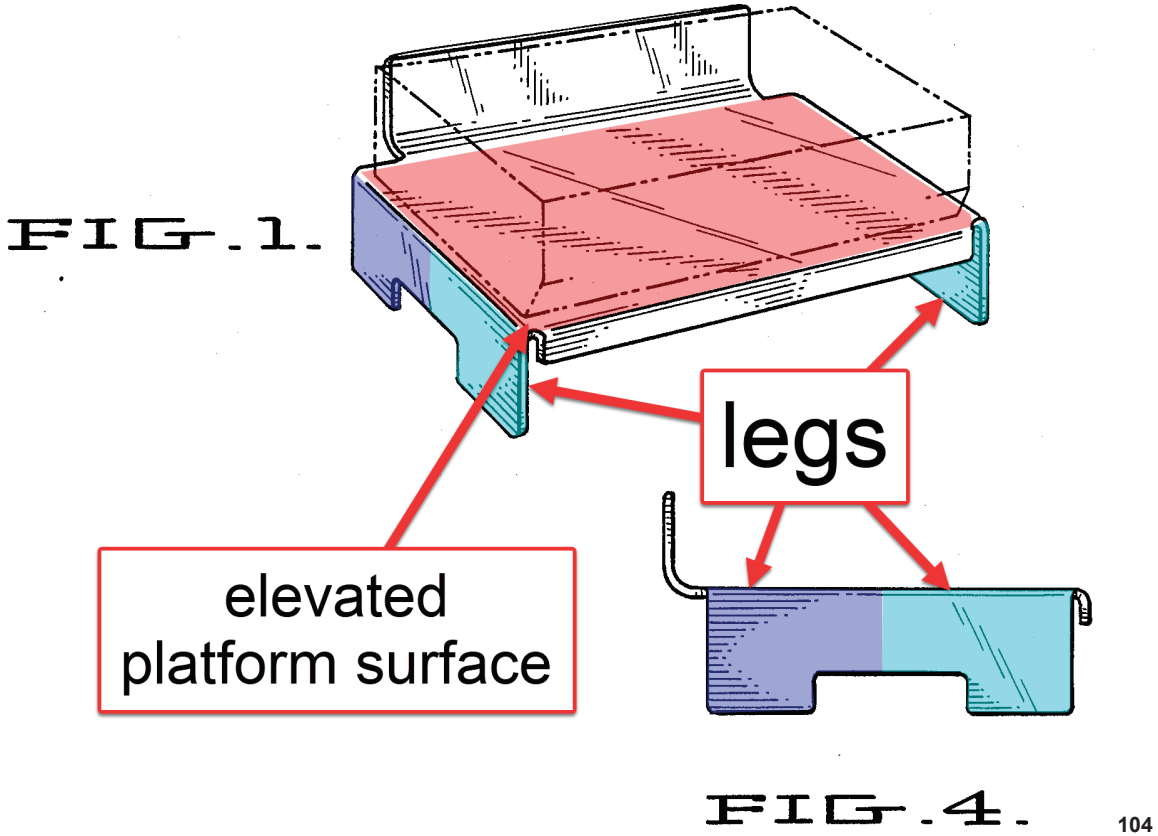

[104]

"Fig. 4 is a left side view, the right side being a mirror image of the left side shown;"[105]

As previously discussed, the Clark printer stand has four legs. Further, as shown above, each of the four legs is proximate to one of the four corners of the elevated platform surface. In fact, each of the four legs directly abuts a corner of the elevated platform surface.

[104] Clark, Figures 1 & 4, Annotated
[105] US D308537, pg. 1

3P. The desktop workspace of claim 1,	**YES:** As shown above, Clarke in view of Lindahl, and in further view of Clark discloses the desktop workspace of claim 1.
3a. wherein the platform element includes four sides including a bottom side on the work surface platform, **3b.** a top side forming the elevated platform surface and two sidewalls that support the elevated platform surface above the bottom side and the work surface platform.	**YES:** Clarke in view of Lindahl, and in further view of Clark discloses that the platform element includes four sides including a bottom side on the work surface platform. Further the platform element has a top side forming the elevated platform surface and two sidewalls that support the elevated platform surface above the bottom side and the work surface platform.

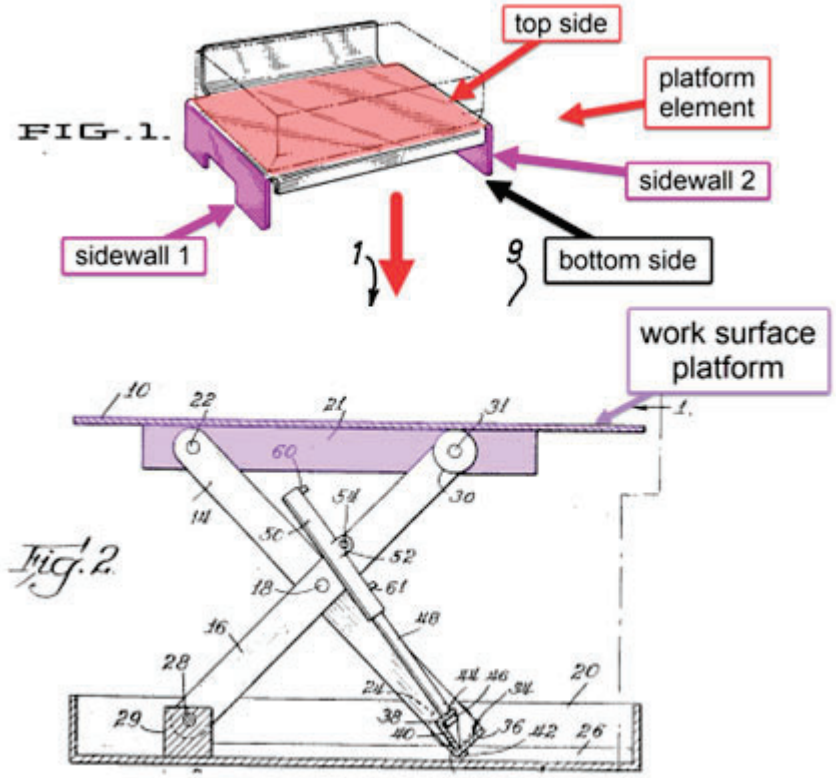

[106]

As shown above, the platform element of Clark has at least four sides. In fact, it has more than four sides. For example, it has a bottom side, which is the bottom of the legs which support the platform element of Clark (aka the top side). As discussed previously, a POSITA would understand and find it obvious that the Clark style printing stand could foreseeably be placed on top of the work surface platform of Clarke, or any other adequately sized horizontal surface for that matter. Further, a POSITA would understand that a printer stand is commonly placed on top of a horizontal surface such as Clarke and is even directly intended so to be. When the Clark printer stand is placed on Clarke, the bottom side of the printer stand will be in direct contact with the work surface platform. Further, the Clark printer stand has a top side as already discussed. Further still, the Clark printer stand has two sidewalls that support the platform surface up of the bottom side and above the work surface platform. As shown in the figures above, the legs of Clark have outwardly facing surfaces (aka sidewalls).

[106] Clark, Figures 1 and Clarke, Figure 2, Annotated

6P. The desktop workspace of claim 1,	**YES:** As shown previously, Clarke in view of Lindahl, and in further view of Clark discloses the desktop workspace of claim 1.
6a. wherein the one end of the gas spring is fixed to the work surface platform via a bracket fixed to an underside of the work surface platform.	**YES:** Clarke in view of Lindahl discloses that one end of the gas spring is fixed to the work surface platform via a bracket fixed to an underside of the work surface platform.

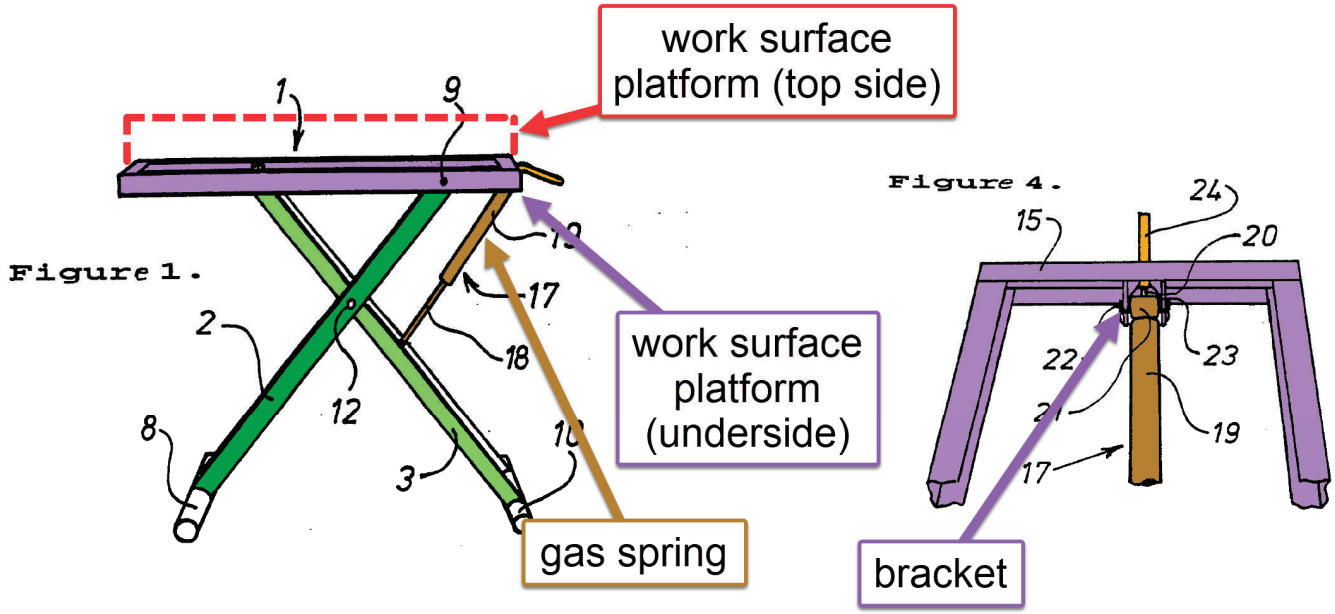

"The present invention relates to a table stand for use preferably in caravans and motorhomes, wherein the top of the stand is provided with a frame-like ***<u>part on which a tabletop is intended to be placed</u>*** *and which is adjustable in the height direction so that the tabletop can be adjusted vertically to different positions." Lindhal, Abstract (emphasis added)*

"An essential feature of the invention is that a blockable gas-spring 17, or piston-cylinder device is provided for enabling the position of the frame-like part 1 to be adjusted vertically in a smooth continuous fashion, both in an upward and in a downward direction. The gas-spring includes a bottom part 18 which is pivotally connected to the leg member 3 beneath the pivot rod 12, and an upper part 19 which is pivotally connected to the transverse frame-bar 15 on the same side of a vertical plane passing through the rod 12 as the lower part 18 (see also Figures 3, 4)." Lindahl 4:5-15

"The pin 20 is intended to coact with a cylindrical bushing 21 which is pivotally connected to a holder means 23, by means of screws 22 or the like, said holder means being mounted on the inside of the frame bar 15." Lindahl 4:23-27

As shown above Lindahl discloses a work surface platform that comprises a top side (tabletop intended to be placed on the frame) as well as an underside (the frame portion highlighted in purple above). Further, Lindahl discloses a gas spring fixed to the work surface platform via a bracket which is fixed to the underside portion. This is clearly shown in Figure 4 of Lindahl which shows a bracket with ears to which the locking gas spring is coupled.

7P. The desktop workspace of claim 6,	**YES:** As shown previously, Clarke in view of Lindahl, and in further view of Clark discloses the desktop workspace of claim 6.
7a. wherein the gas spring is attached directly to the one of the first set of pivot arms.	**YES:** Clarke and Lindahl disclose that the gas spring is attached directly to one of the first set of pivot arms.

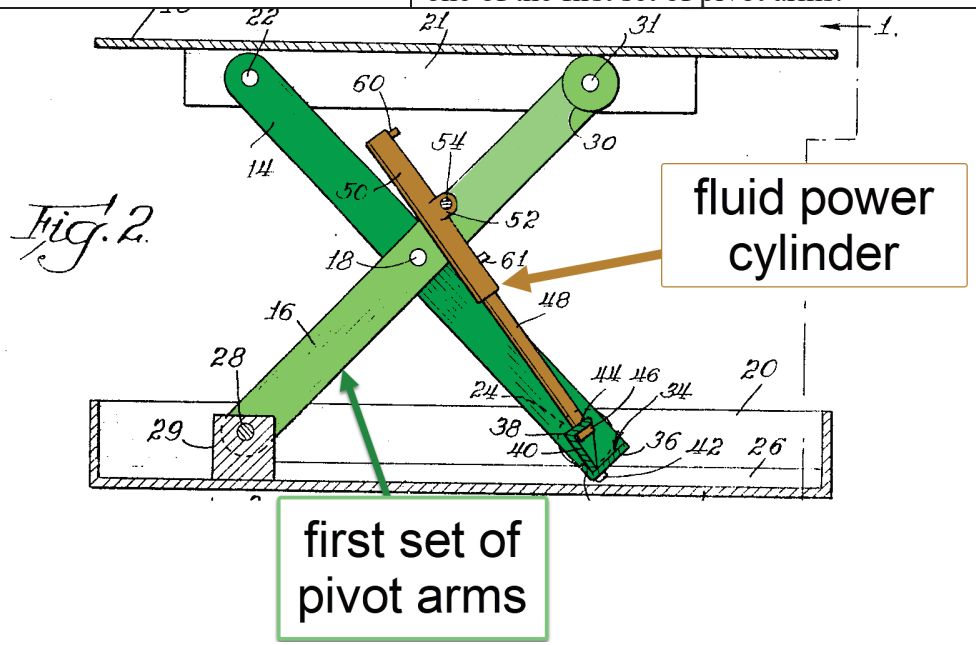

[107]

[107] Clarke, Figure 2, Annotated

"Cylinder 50 has a side mounting plate 52 pivotally mounted on a rod 54. Rod 54 extends between the two opposite legs 16 to which it is connected." Clarke 2:33-36

As shown above, the gas spring is attached directly to one of the first set of pivot arms. The gas spring has a bottom part 50 (the cylinder end) which is pivotally connected to leg member 16, which is one of the first set of pivot arms.

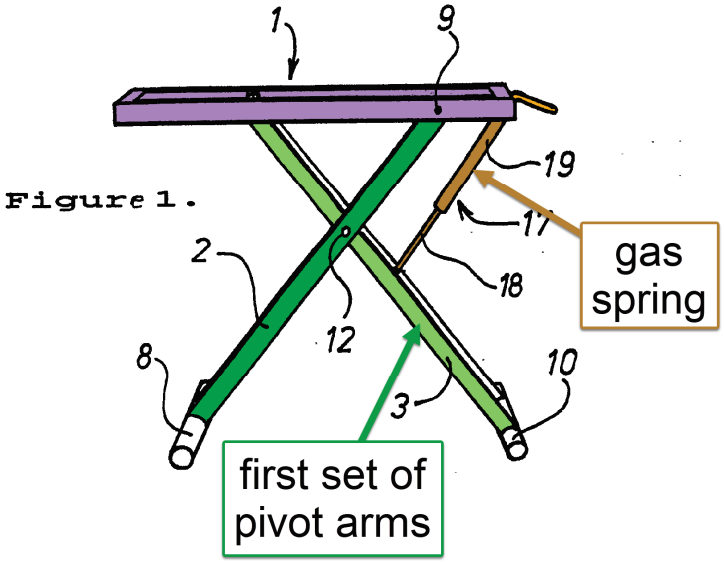

[108]

"The gas-spring includes a bottom part 18 which is pivotally connected to the leg member 3 beneath the pivot rod 12" Lindahl 4:10-12

As shown above, the gas spring of Lindahl is also attached directly to one of the first set of pivot arms. The gas spring has a bottom part 18 (the rod end) which is pivotally connected to leg member 3, which is one of the first set of pivot arms. Thus, both Lindahl and Clarke teach that the actuator is directly connected to one of the first set of pivot arms.

8P. The desktop workspace of claim 1,	**YES:** As shown previously, Clarke in view of Lindahl, and in further view of Clark discloses the desktop workspace of claim 1.
8a. wherein the gas spring is attached directly to the one of the first set of pivot arms.	**YES:** See element 7a.

[108] Lindahl Figure 1, annotated

9P. The desktop workspace of claim 1,	**YES:** As shown previously, Clarke in view of Lindahl, and in further view of Clark discloses the desktop workspace of claim 1.
9a. wherein the sliding mechanism is a first sliding mechanism, **9b.** the desktop workspace further comprising a second sliding mechanism,	**YES:** Clarke in view of Lindahl discloses that the sliding mechanism is a first sliding mechanism. Further this combination discloses that there is a second sliding mechanism.

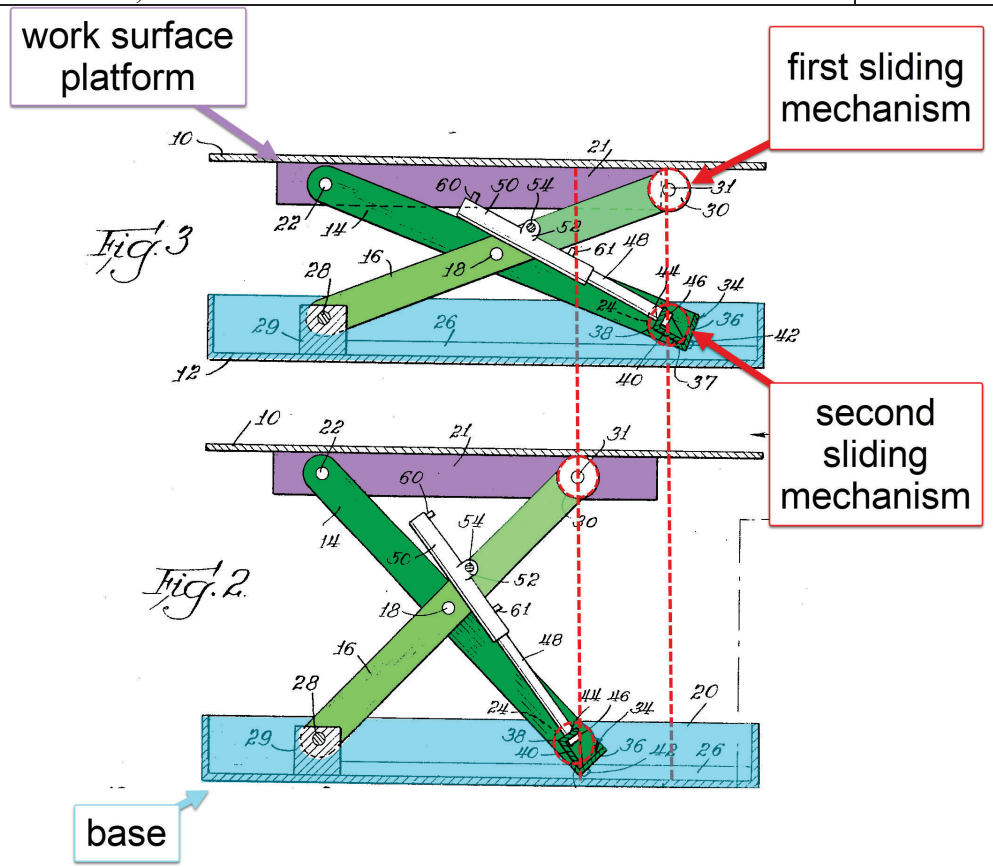

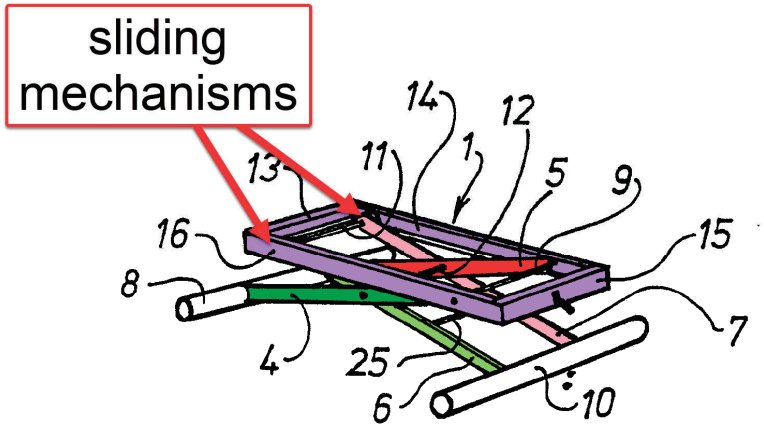

[109]

[110]

[109] Clarke, Figures 2 & 3, Annotated
[110] Lindahl, Figure 2, Annotated

"Depending from the top, at each side, is a plate 21. A pivot 22 near one end of the plate 21 connects the upper end of the leg 14 to the plate. Leg 14 has a roller 24 rotatably mounted at the other end on shaft 25. ***Roller 24 rides on the upper surface of a strip 26*** *in the bottom of one side of the base 12. One end of the other leg 16 has a pivot 28 connecting it to a support block 29 directly below the pivot 22 for the leg 14.* ***A roller 30 mounted on shaft 31 at the other end of leg 16 rides on the underside of the table top 10****. The legs are closely folded together by the pivot 18 intermediate their ends, for parallel scissor action between the base and the top." Clarke 2:3-14 (emphasis added)* *"The one rod 9 is pivotally mounted in the bars 14, 15, whereas the other* ***transverse rod 11 is provided at both ends with suitable means for sliding in the U-shaped part of the bars*** *in order to achieve the aforesaid scissor-like movement of the leg members." Lindahl 3:31-4:3 (emphasis added)* As shown above, both Clarke and Lindahl have a first sliding mechanism, which is what allows the top portion of the scissor links to translate relative to the work surface platform. In addition to this, Clarke discloses a second sliding mechanism that is operable between the pivot arms and the base. Again, this is typical scissor linkage design that any POSITA would readily understand is ubiquitous.	
9c. wherein either the first sliding mechanism or the second sliding mechanism is attached or slides along the work surface platform, **9d.** and the other of the first sliding mechanism and the second sliding mechanism is attached to or slides along the base.	**YES:** Clarke in view of Lindahl discloses that either the first or the second sliding mechanism is attached or slides along the work surface platform. Further, the other first and second sliding mechanism is attached to or slides along the base.

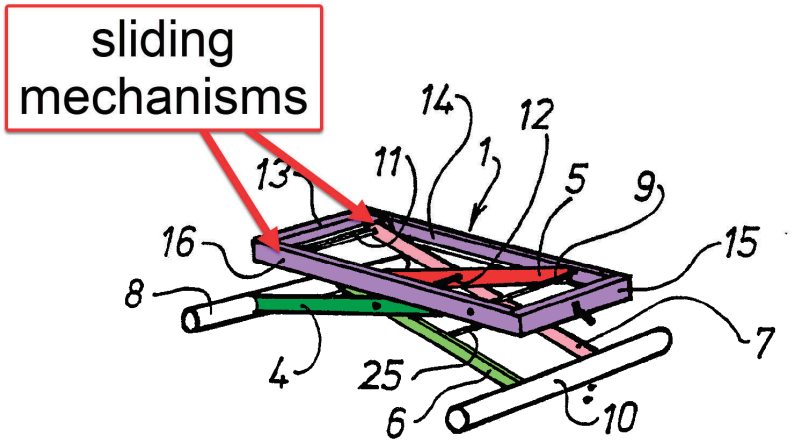

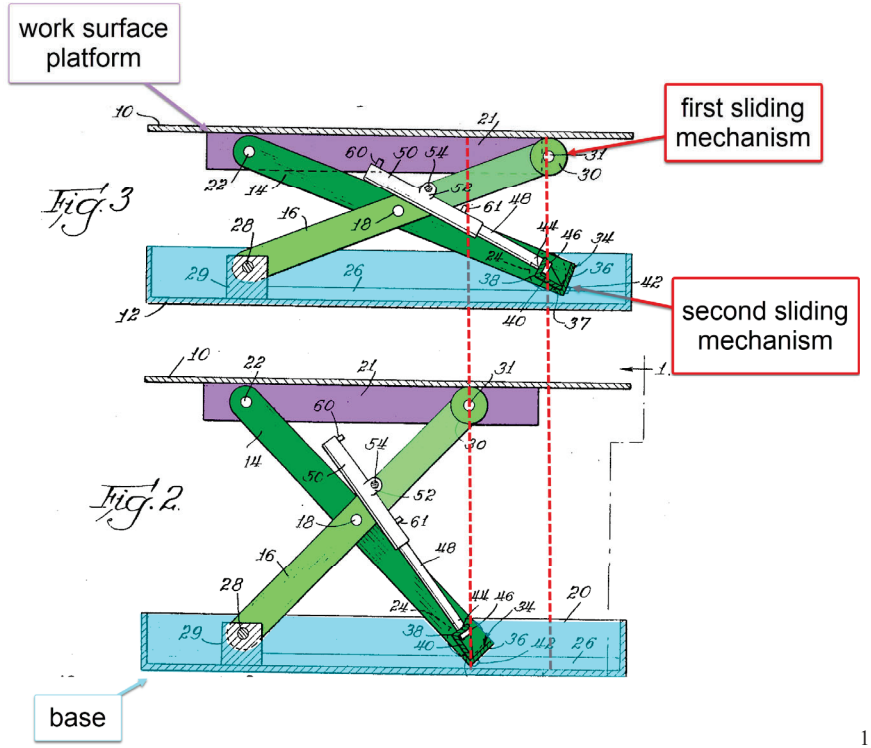

111 112

"Depending from the top, at each side, is a plate 21. A pivot 22 near one end of the plate 21 connects the upper end of the leg 14 to the plate. Leg 14 has a roller 24 rotatably mounted at the other end on shaft 25. ***Roller 24 rides on the upper surface of a strip 26 in the bottom of one side of the base*** *12. One end of the other leg 16 has a pivot 28 connecting it to a support block 29 directly below the pivot 22 for the leg 14.* ***A roller 30 mounted on shaft 31 at the other end of leg 16 rides on the underside of the table top 10****. The legs are closely folded together by the pivot 18 intermediate their ends, for parallel scissor action between the base and the top." Clarke 2:3-14 (emphasis added)*

"The one rod 9 is pivotally mounted in the bars 14, 15, whereas the other ***transverse rod 11 is provided at both ends with suitable means for sliding in the U-shaped part of the bars*** *in order to achieve the aforesaid scissor-like movement of the leg members." Lindahl 3:31-4:3 (emphasis added)*

[111] Lindahl, Figure 2, Annotated
[112] Clarke, Figure 2 & 3, Annotated

As shown above, both Clarke and Lindahl show that the first sliding mechanism(s) are attached to or slide along the work surface platform. Further, Clarke has a second sliding mechanism (item 24 as shown above) that is attached to or slides along the base.	
10P. The desktop workspace of claim 1,	**YES:** As shown previously, Clarke in view of Lindahl, and in further view of Clark discloses the desktop workspace of claim 1.
10a. wherein the scissoring motion when raising and lowering the work surface platform to various heights of the height adjustment mechanism moves the work surface platform in a straight vertical direction relative to the base.	**YES:** Clarke discloses that the scissoring motion when raising and lowering the work surface platform to various heights of the height adjustment mechanism moves the work surface platform in a straight vertical line relative to the base.

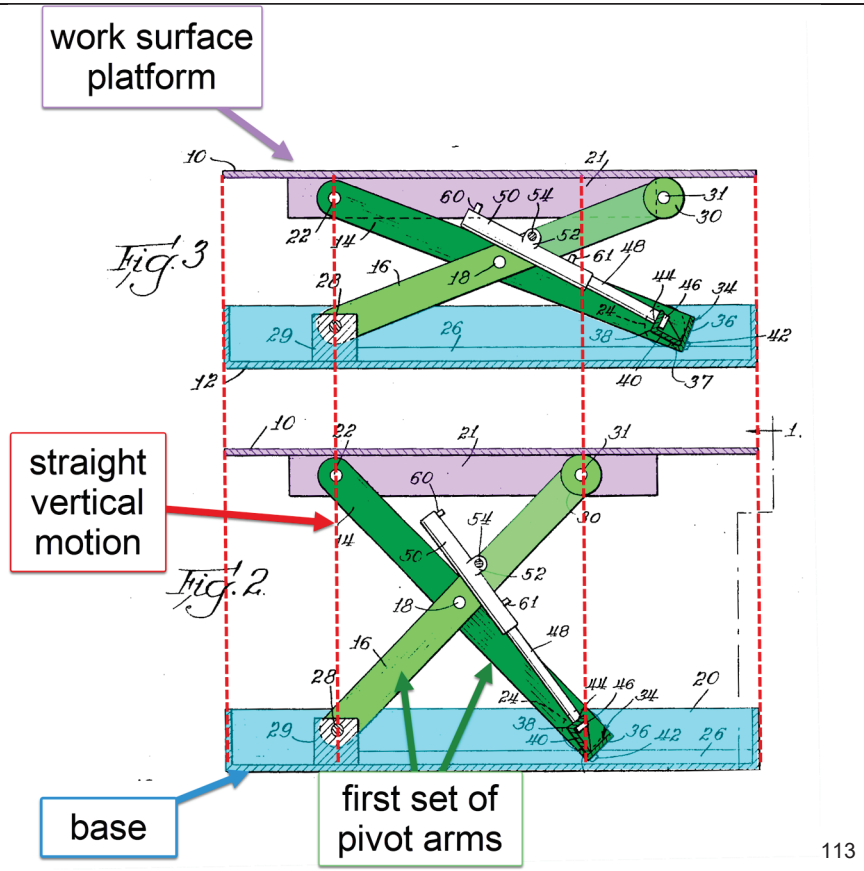

113

*"Depending from the top, at each side, is a plate 21. A pivot 22 near one end of the plate 21 connects the upper end of the leg 14 to the plate. Leg 14 has a roller 24 rotatably mounted at the other end on shaft 25. Roller 24 rides on the upper surface of a strip 26 in the bottom of one side of the base 12. One end of the other leg 16 has a pivot 28 connecting it to a support block 29 directly below the pivot 22 for the leg 14. A roller 30 mounted on shaft 31 at the other end of leg 16 rides on the underside of the table top 10. The legs are closely folded together by the pivot 18 intermediate their ends, **for parallel scissor action between the base and the top**." Clarke 2:3-14 (emphasis added)*

[113] Clarke, Figures 2 & 3, Annotated

As shown above, the scissor mechanism of Clarke moves the work surface platform in a straight vertical line relative to the base. This is a property typical of scissor lifting mechanisms generally as a POSITA would understand. the mechanism is adjustable to various heights has already been shown. This feature is afforded by the locking gas spring in Lindahl.	
11P. The desktop workspace of claim 1,	**YES:** As shown previously, Clarke in view of Lindahl, and in further view of Clark discloses the desktop workspace of claim 1.
11a. wherein the sliding mechanism includes a wheel mounted on the end of the arm of the first set of pivot arms.	**YES:** Clarke discloses that the sliding mechanism includes a wheel mounted on the end of the arm of the first set of pivot arms.

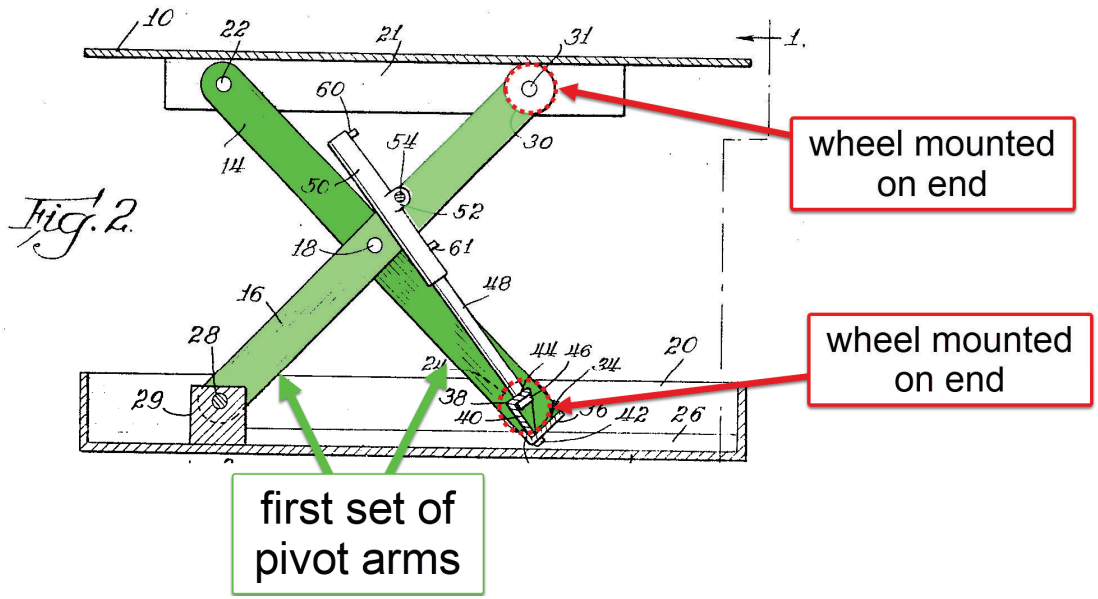

[114]

"Depending from the top, at each side, is a plate 21. A pivot 22 near one end of the plate 21 connects the upper end of the leg 14 to the plate. Leg 14 has ***a roller 24 rotatably mounted at the other end on shaft 25****. Roller 24 rides on the upper surface of a strip 26 in the bottom of one side of the base 12. One end of the other leg 16 has a pivot 28 connecting it to a support block 29 directly below the pivot 22 for the leg 14.* ***A roller 30 mounted on shaft 31 at the other end of leg*** *16 rides on the underside of the table top 10. The legs are closely folded together by the pivot 18 intermediate their ends, for parallel scissor action between the base and the top." Clarke 2:3-14 (emphasis added)*

[114] Clarke, Figure 2, Annotated

As shown above, Clarke discloses a sliding mechanism that includes a wheel (roller 28 and 30) mounted on the end of the arm of the first set of pivot arms. Clarke discloses at least two such wheels as 30 and 24. This is a very common design for scissor lifts, and example of which is shown in Clarke. As previously discussed, a sliding mechanism of some kind is generally necessary to allow a scissor linkage to move up and down. Some scissor linkages use sliding contact, others use rolling contact. A POSITA would be motivated to use the wheel as disclosed in Clarke as rolling contact has less friction than sliding contact. This would lead to better ease of use and less wear and tear on the mechanism.

12P. The desktop workspace of claim 1,	**YES:** As shown previously, Clarke in view of Lindahl, and in further view of Clark discloses the desktop workspace of claim 1.
12a. wherein the base pivot point is a first base pivot point,	**YES:** Clarke discloses that that base pivot point is a first base pivot point.

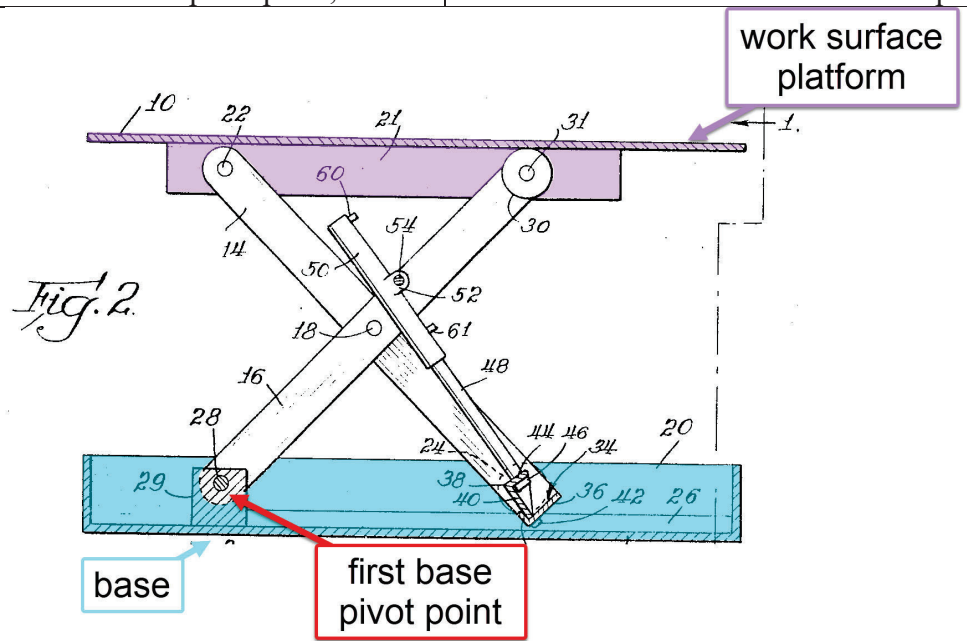

[115]

"Depending from the top, at each side, is a plate 21. A pivot 22 near one end of the plate 21 connects the upper end of the leg 14 to the plate. Leg 14 has a roller 24 rotatably mounted at the other end on shaft 25. Roller 24 rides on the upper surface of a strip 26 in the bottom of one side of the base 12. ***<u>One end of the other leg 16 has a pivot 28 connecting it to a support block 29</u>*** *directly below the pivot 22 for the leg 14. A roller 30*

[115] Clarke, Figure 2, Annotated

mounted on shaft 31 at the other end of leg 16 rides on the underside of the table top 10. The legs are closely folded together by the pivot 18 intermediate their ends, for parallel scissor action between the base and the top." Clarke 2:3-14 (emphasis added) As shown above, as is ubiquitous with scissor linkage design, Clarke discloses a set of pivot points, two which are fixed and two of which are able to translate. This is what allows the scissor lift mechanism to move with the traditional scissoring action. As a consequence, all scissor linkages with a base member have a first base pivot point (such as 28 in the case of Clarke).	
12b. wherein the height adjustment mechanism further includes a second base pivot point fixed relative to the base and connecting the base and the second set of pivot arms, and	**YES:** Clarke discloses that the height adjustment mechanism further includes a second base pivot point fixed relative to the base and connecting the base to the second set of pivot arms.

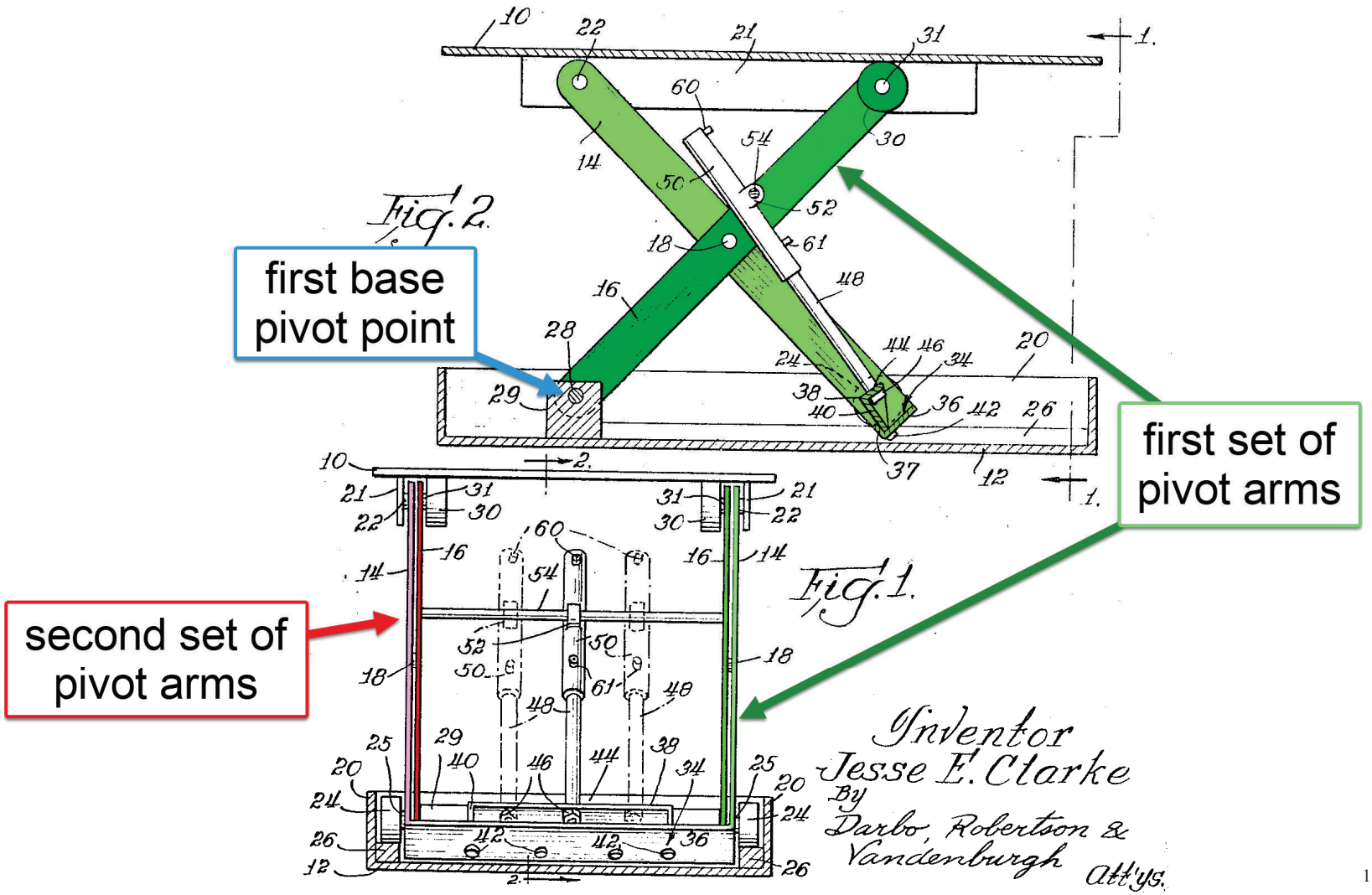

[116]

"Depending from the top, at each side, is a plate 21. A pivot 22 near one end of the plate 21 connects the upper end of the leg 14 to the plate. Leg 14 has a roller 24 rotatably mounted at the other end on shaft 25. Roller 24 rides on the upper surface of a strip 26 in the bottom of one side of

[116] Clarke, Figures 1 & 2, Annotated

the base 12. ***<u>One end of the other leg 16 has a pivot 28 connecting it to a support block 29</u>*** *directly below the pivot 22 for the leg 14. A roller 30 mounted on shaft 31 at the other end of leg 16 rides on the underside of the table top 10. The legs are closely folded together by the pivot 18 intermediate their ends, for parallel scissor action between the base and the top." Clarke 2:3-14 (emphasis added)*

As shown above and as shown previously, Clarke discloses a first base pivot point and at least one set of pivot arms. It is extremely common in scissor lift design to have a pair of scissor lift linkages (and therefore a pair of pivot arms). For example, Lindahl has a pair of pivot arms as previously discussed. A POSITA understands that each the second set of pivot arms requires a second base pivot point to function properly. Thus, Clarke will also have a second base pivot point which accompanies the second set of pivot arms. Were this not the case, there would be no purpose to having the second set of pivot arms. Further, the second base pivot point will be fixed relative to the base which connects to the second set of pivot arms in the same way that Clarke shows the base connecting to the first set of pivot arms as seen in Fig 2.

12c. wherein the base includes one or multiple stationary pieces of material connecting the first and second base pivot points to one another.	**YES:** Clarke in view of Lindahl discloses that the base includes one or multiple stationary pieces of material connecting the first and second base pivot points to one another.

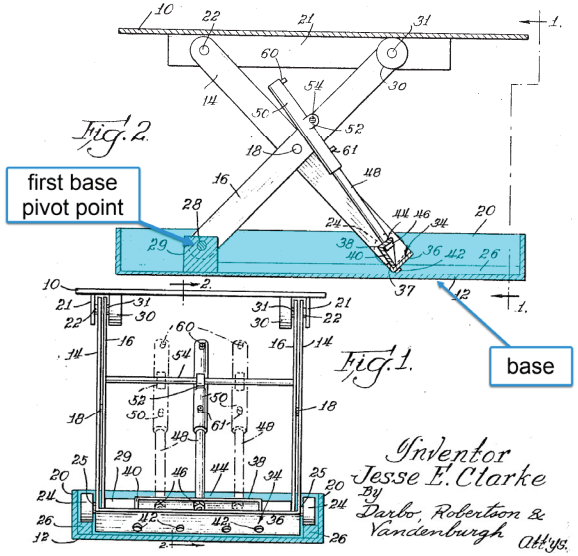

117

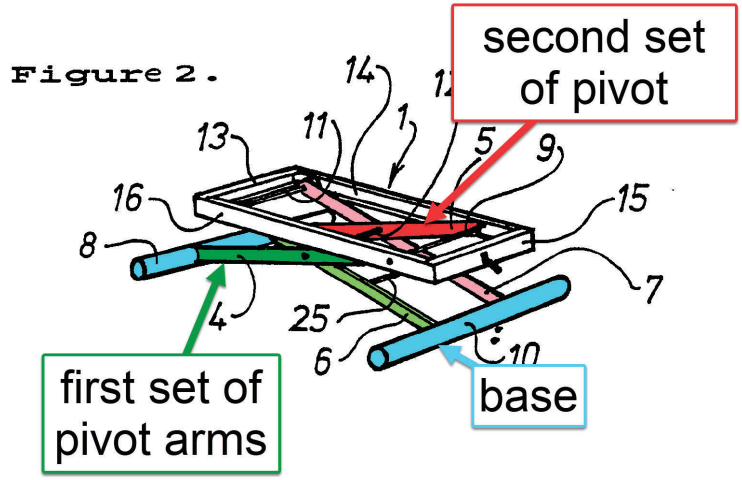

118

[117] Clarke, Figures 1 & 2, Annotated
[118] Lindahl, Figure 2, Annotated

"Depending from the top, at each side, is a plate 21. A pivot 22 near one end of the plate 21 connects the upper end of the leg 14 to the plate. Leg 14 has a roller 24 rotatably mounted at the other end on shaft 25. Roller 24 rides on the upper surface of a strip 26 in the bottom of one side of the base 12. One end of the other leg 16 has a pivot 28 connecting it to a support block 29 directly below the pivot 22 for the leg 14. A roller 30 mounted on shaft 31 at the other end of leg 16 rides on the underside of the table top 10. The legs are closely folded together by the pivot 18 intermediate their ends, for parallel scissor action between the base and the top." Clarke 2:3-14 (emphasis added) *"Each leg member 2, 3 includes two substantially parallel rods or bars 4, 5; 6, 7, wherein the two bars of each pair of bars are spaced from one another and are connected together at both ends thereof by means of a respective transverse rod 8, 9; 10, 11, wherein the lowermost transverse rods 8; 10 function to support the stand against the underlying support surface…" Lindahl 3:3-10* As shown above, Clarke has a stationary base. Clarke is configured to provide vertical movement. As shown in the figures and in the text, it is the table that moves up and down while the base remains in stationary contact with the existing platform (the floor). Lindahl discloses material (transverse rods 8 and 10) that connects the first set of pivot arms to the second set of pivots arms. As the Lindahl mechanism is being collapsed, for instance, whichever transverse rod has more weight on it will be the stationary piece with respect to the existing platform. As also shown above, Clarke has a base comprised of one or more stationary pieces. Thus, the stationary base will connect the first and second base pivot points to one another.	
13P. The desktop workspace of claim 1,	**YES:** As shown previously, Clarke in view of Lindahl, and in further view of Clark discloses the desktop workspace of claim 1.
13a. wherein the gas spring is attached to the one of the first set of pivot arms via an arm pivot point.	**YES:** Clarke discloses that the gas spring is attached to one of the first set of pivot arms via an arm pivot point.

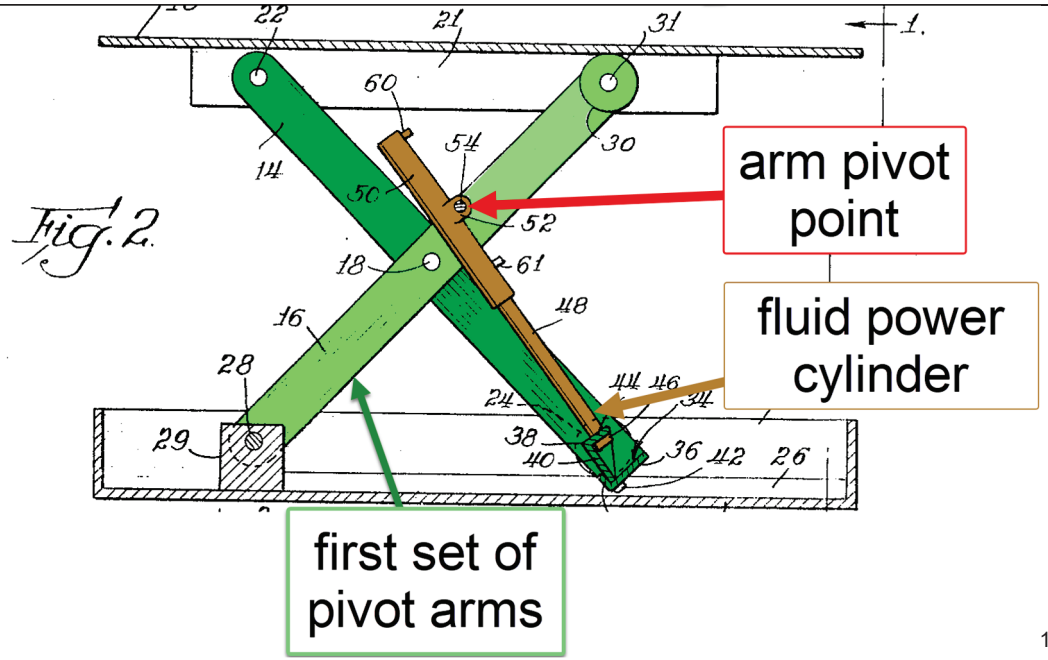

[119]

"Cylinder 50 has a side mounting plate 52 pivotally mounted on a rod 54. Rod 54 extends between the two opposite legs 16 to which it is connected." Clarke 2:33-36

As shown above, the gas spring is attached directly to one of the first set of pivot arms. The gas spring has a bottom part 50 (the cylinder end) which is pivotally connected to leg member 16, via an arm pivot point (i.e. mounting 52) which is on one of the first set of pivot arms. A POSITA understands that a scissoring mechanism has only one degree of freedom and that the two ends of the gas spring can be connected to any two locations on a scissoring mechanism which are not rigidly connected to one another in order to control the motion of the scissoring mechanism. As discussed previously, both Clarke and Lindahl teach connecting one end of the actuator directly to one of the arms of the set of pivot arms.

14P. The desktop workspace of claim 1,	**YES:** As shown previously, Clarke in view of Lindahl, and in further view of Clark discloses the desktop workspace of claim 1.

[119] Clarke, Figure 2, Annotated

14a. wherein the element that connects the first set of pivot arms to the second set of pivot arms is attached on the same sides of the arms as the sliding mechanism relative to the scissoring pivot points.	**YES:** Clarke in view of Lindahl discloses that the element that connects the first set of pivot arms to the second set of pivot arms is attached on the same sides of the arms as the sliding mechanism relative to the scissoring pivot points.

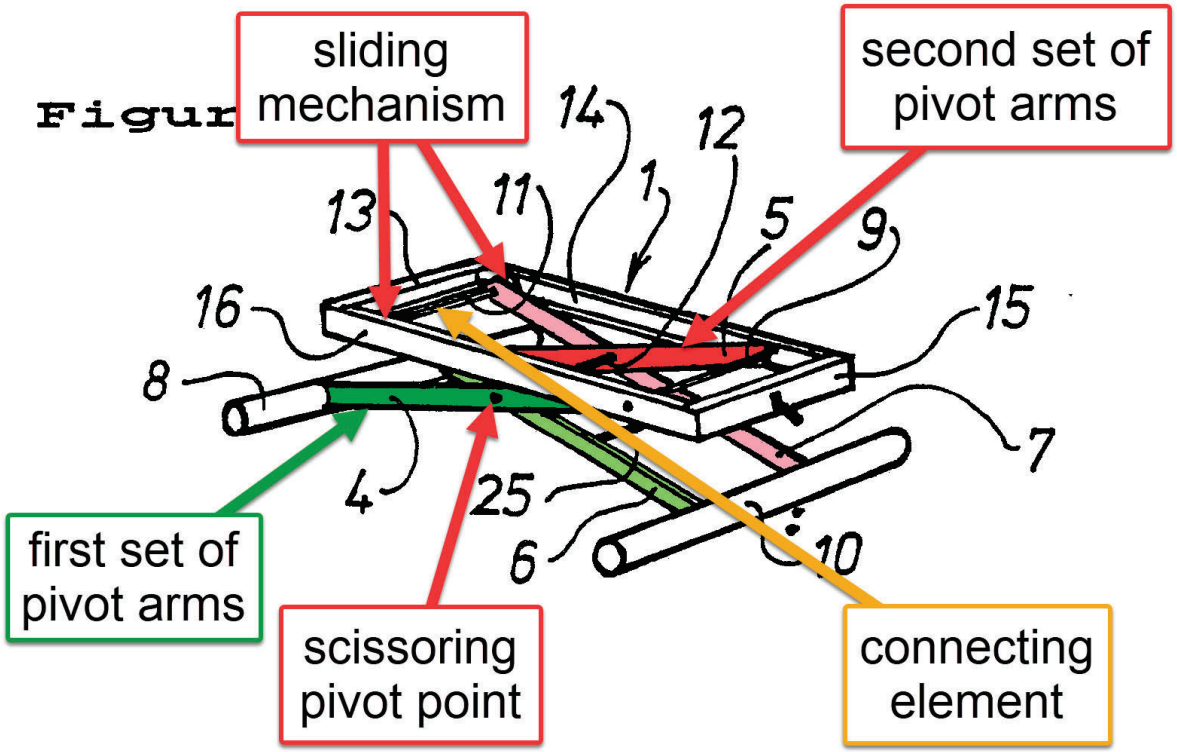

[120]

"Each leg member 2, 3 includes two substantially parallel rods or bars 4, 5; 6, 7, wherein the two bars of each pair of bars are spaced from one another and are connected together at both ends thereof by means of a respective transverse rod 8, 9; 10, 11; wherein the lowermost transverse rods 8; 10 function to support the stand against the underlying support surface ..." Lindahl 3:3-10

[120] Lindahl, Figure 2, Annotated

"The one rod 9 is pivotally mounted in the bars 14, 15, whereas the other transverse rod 11 is provided at both ends with suitable means for sliding in the U-shaped part of the bars in order to achieve the aforesaid scissor-like movement of the leg members." Lindahl 3:31-4:3 (emphasis added) As shown above, transverse rod 11 of Lindahl is on the same side of the pivot arms as the sliding mechanism of Lindahl, relative to the scissoring pivot points. Further, as previously discussed, transverse rod 11 is an element that connects the first set of pivot arms to the second set of pivot arms. A POSITA would understand that the demands on the upper sliding mechanism in the Clarke device could be reduced with the addition of a similar connecting element in Lindahl which would eliminate any side loads on the sliding mechanism due to the first and second pivot arms spreading apart.	
16P. A desktop workspace that adjusts vertically, comprising:	**YES:** See element 1P.
16a. a work surface platform;	**YES:** See element 1a.
16b. a platform element sitting on the work surface platform, the platform element including an elevated platform surface above the work surface platform;	**YES:** See element 1b.
16c. a base configured to sit on an existing platform; and	**YES:** See element 1c.
16d. a height adjustment mechanism connecting the work surface platform and the base, the height adjustment mechanism including:	**YES:** See element 1d.
16d1. a first set of pivot arms that connect at a scissoring pivot point creating a scissoring motion when raising and lowering the work surface platform to various heights;	**YES:** See element 1d1.
16d2. a second set of pivot arms;	**YES:** See element 1d2.
16d3. an element that connects the first set of pivot arms to the second set of pivot arms;	**YES:** See element 1d3.
16d4. a base pivot point fixed relative to the base and connecting the base and the first set of pivot arms;	**YES:** See element 1d4.
16d5. a platform pivot point fixed relative to the work surface platform and connecting the work surface platform and the first set of pivot arms;	**YES:** See element 1d5.
16d6. a sliding mechanism on an end of an arm of the first set of pivot arms between the end of the arm and either the work surface platform or the base; and	**YES:** See element 1d6.

16d7. a gas spring that assists in elevation of the work surface platform by applying a force to one of the first set of pivot arms as part of the scissoring motion,	**YES:** See element 1d7.
16d8. wherein one end of the gas spring is fixed to the work surface platform, wherein the gas spring acts as a locking device that holds the work surface platform at various vertical heights above the base, and	**YES:** See element 1d8
16d9. wherein the gas spring, the first set of pivot arms, the base pivot point, and the platform pivot point align side-by-side when the desktop workspace is in a fully lowered position such that the desktop workspace adjusts vertically.	**YES:** Clarke in view of Lindahl discloses that the gas spring, the first set of pivot arms, the base pivot point, and the platform pivot point align side-by-side when the desktop workspace is in a fully lowered position such that the desktop workspace adjusts vertically.

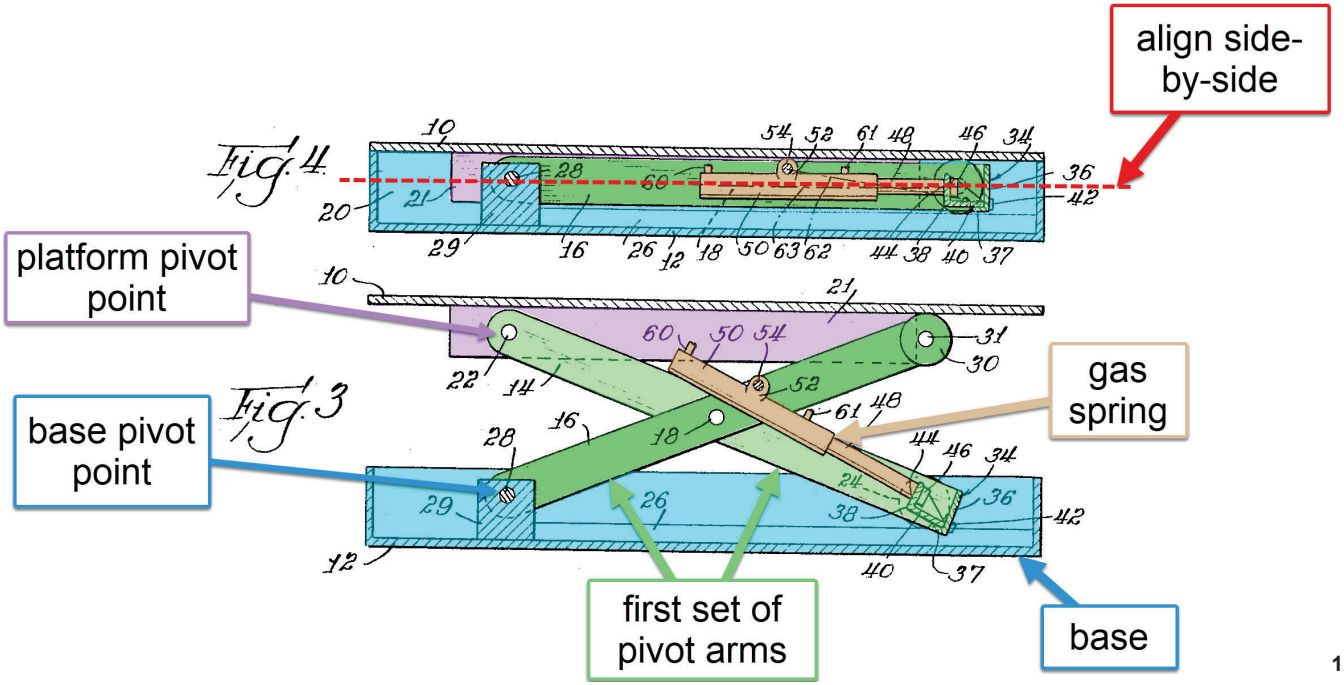

[121]

[121] Clarke, Figure 3 & 4, Annotated

"Cylinder 50 has a side mounting plate 52 pivotally mounted on a rod 54. Rod 54 extends between the two opposite legs 16 to which it is connected. It is located at the side of the cylinder 50 opposite the pivotal mountings formed by studs 42. This rod 54 is at the upper side of the legs 16 above the common pivot 18 for the legs (FIGURE 4), and the mountings 52 extend downwardly. In the down position the cylinders will be entirely below the upper edges of the legs 16 to which they are connected." Clarke 2:32-41

As shown above, the Clarke linkage is arranged such that the gas spring, the first set of pivot arms, the base pivot point, and the platform pivot point align side-by-side when the workspace is in a fully lowered position. As discussed previously, a POSITA would be motivated to replace the fluid power cylinder of Clarke with the locking gas spring system of Lindahl. Further still, a POSITA will understand that Clarke teaches a kinematic arrangement where the piston-cylinder actuator is in flat alignment while still having some mechanical advantage with which to operate on the scissor linkage. This is afforded by the eccentric trunnion mount of the piston-cylinder arrangement of Clarke. A POSITA will recognize the advantage this will provide in the combination of Clarke in view of Lindahl. It will allow the locking gas spring to still provide some assistance in the lifting of the table from the fully lowered position. Finally, as discussed previously, a POSITA will recognize that the actuated end of the locking gas spring is most advantageously connected to the work surface platform, as previously discussed. Thus, for at least these reasons, a POSITA will be motivated to connect the gas spring to the work surface platform as taught in Lindahl, while simultaneously connecting the other end of the locking gas spring to the pivot arms in a manner such as taught by Clarke.

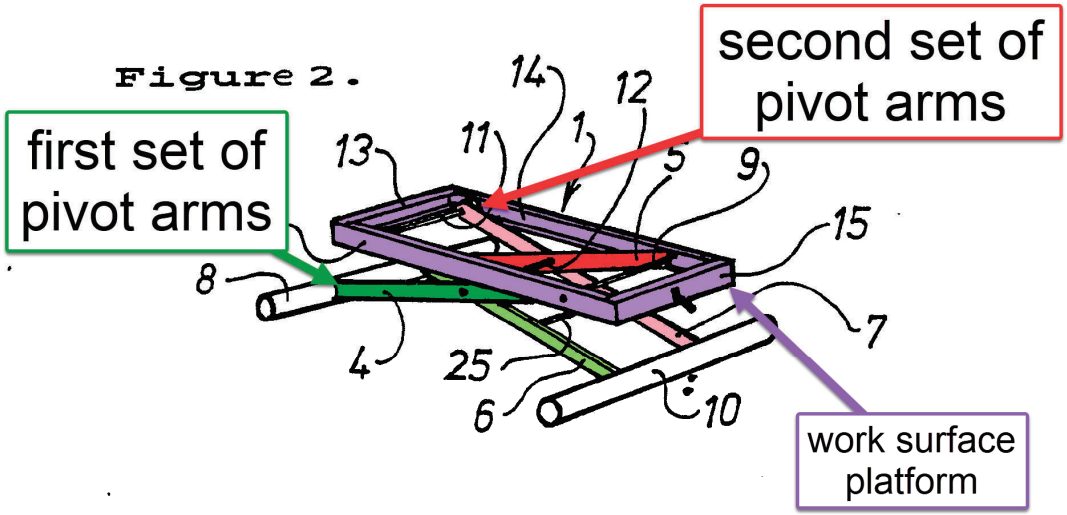

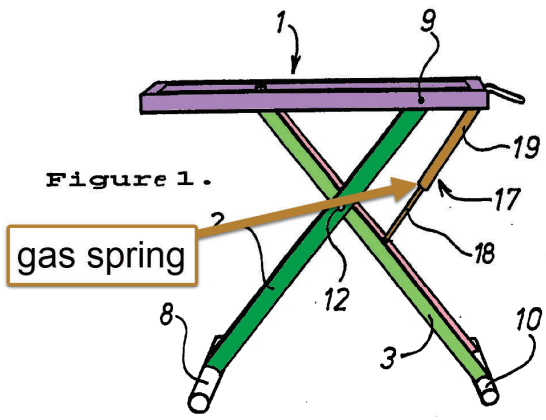

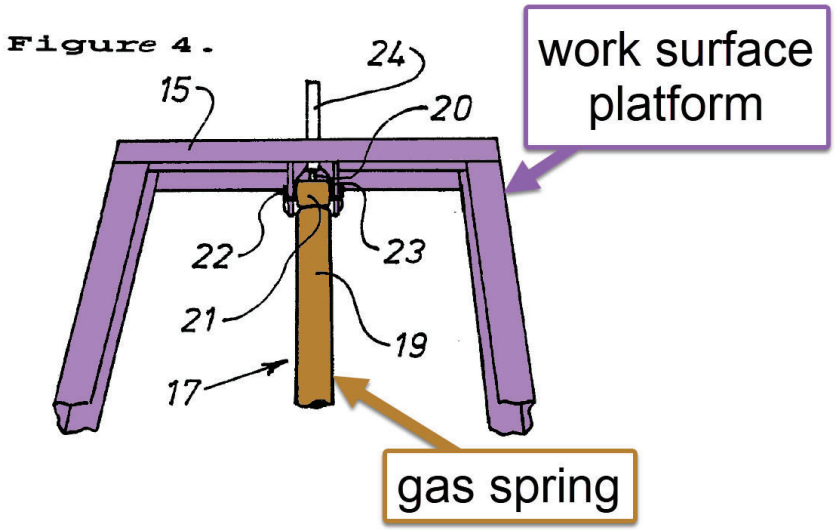

"An essential feature of the invention is that a blockable gas-spring 17, or piston-cylinder device is provided for enabling the position of the frame-like part 1 to be adjusted vertically in a smooth continuous fashion, both in an upward and in a downward direction. The gas-spring includes a bottom part 18 which is pivotally connected to the leg member 3 beneath the pivot rod 12, and an upper part 19 which is pivotally connected to the transverse frame-bar 15 on the same side of a vertical plane passing through the rod 12 as the lower part 18 (see also Figures 3, 4)." Lindahl 4:5-15

17P. The desktop workspace of claim 16,	**YES:** As shown previously, Clarke in view of Lindahl, and in further view of Clark discloses the desktop workspace of claim 16.
17a. wherein the gas spring is a first spring,	**YES:** Clarke in view of Lindahl discloses a gas spring that is a first spring.

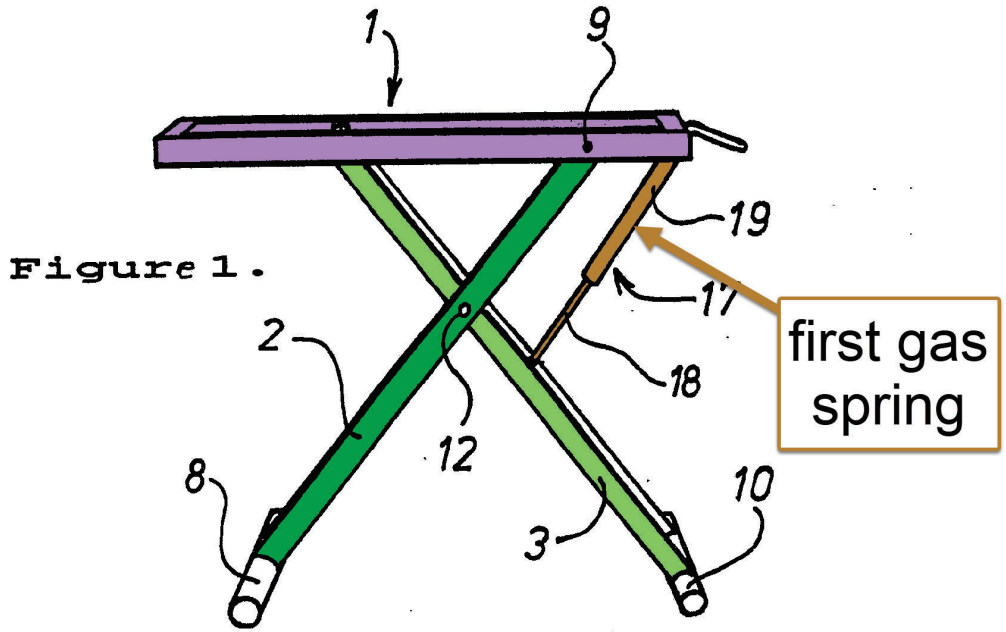

"An essential feature of the invention is that a blockable gas-spring 17, or piston-cylinder device is provided for enabling the position of the frame-like part 1 to be adjusted vertically in a smooth continuous fashion, both in an upward and in a downward direction. The gas-spring includes a bottom part 18 which is pivotally connected to the leg member 3 beneath the pivot rod 12, and an upper part 19 which is pivotally connected to the transverse frame-bar 15 on the same side of a vertical plane passing through the rod 12 as the lower part 18 (see also Figures 3, 4)." Lindahl 4:5-15

As shown above, Lindahl discloses a first gas spring (i.e. blockable gas-spring 17). As discussed previously Clarke uses a piston cylinder device that can easily be replaced with a gas spring for manual actuation. Thus Clarke in view of Lindahl incorporates a first gas spring.

17b. the desktop workspace comprising a pair of springs attached to the height adjustment mechanism to assist in the elevation of the work surface platform, the pair of springs including the first spring and a second spring.	**YES:** A POSITA would recognize the addition of a second gas spring as an ordinary design choice such that the desktop workspace comprises a pair of springs attached to the height adjustment mechanism to assist in the elevation of the work surface platform, the pair of spring including the first spring and a second spring.

	In addition to this, Clarke in view of Lindahl, and in further view of Clark and other references such as CN203934825 to Zhang discloses a second gas spring such that the desktop workspace comprises a pair of springs attached to the height adjustment mechanism to assist in the elevation of the work surface platform, the pair of springs including the first spring and a second spring.

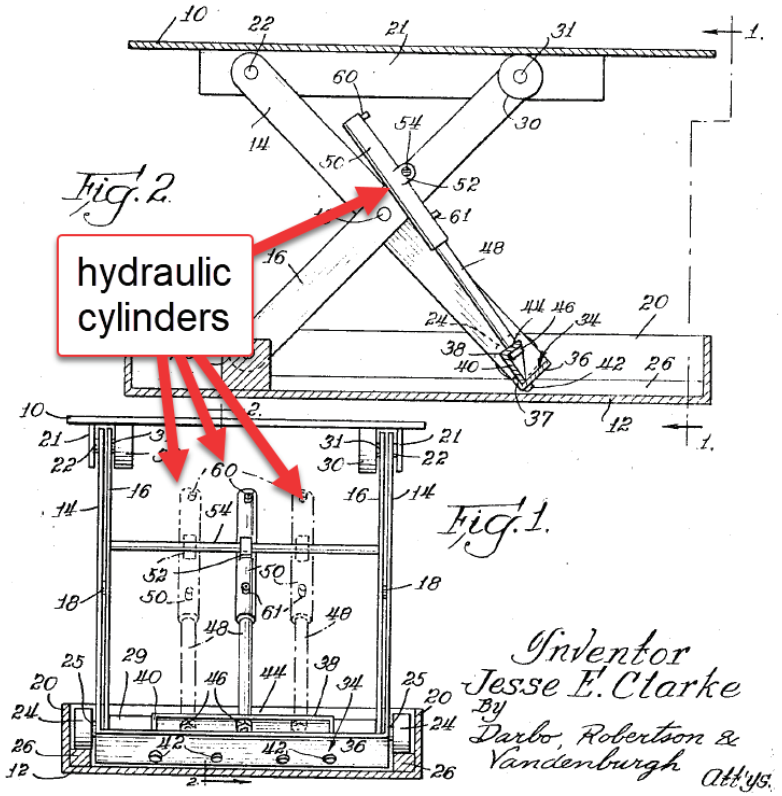

[122]

"To supply air or fluid pressure, each cylinder 50 is provided with an inlet 60 near its outer end to which some suitable connection (not shown) is made." Clarke 2:67-69

[122] Clarke, Figure 1 & 2, Annotated

"In this invention, a lift table with a completely closed scissor linkage is raised by one or more hydraulic cylinders, depending on the lifting force necessary." US 3,282,566 to Clarke 1:56-59

A POSITA would recognize that having multiple actuators for lifting the scissor lift linkage is well-known and customary. For example, Clarke discloses a scissor lift platform with three fluid power cylinders acting in parallel.

As shown above, Clarke in view of Lindahl and in Further view of Clark with the knowledge of a POSITA renders obvious each and every element of the Asserted Claims of the '843 patent. For at least the reasons shown above, it is my opinion that the Asserted Claims of the '843 patent are invalid due to obviousness under 35 U.S.C §103.