US 20090308852A1

(19) United States

(12) Patent Application Publication

Alpay et al.

(10) Pub. No.: US 2009/0308852 A1

(43) Pub. Date: Dec. 17, 2009

(54) **REDUCING BACK-REFLECTIONS IN LASER PROCESSING SYSTEMS**

(75) Inventors: **Mehmet E. Alpay**, Portland, OR (US); **Brian Johansen**, Hillsboro, OR (US)

Correspondence Address:
ELECTRO SCIENTIFIC INDUSTRIES/STOEL RIVES, LLP
900 SW FIFTH AVE., SUITE 2600
PORTLAND, OR 97204-1268 (US)

(73) Assignee: **ELECTRO SCIENTIFIC INDUSTRIES, INC.**, Portland, OR (US)

(21) Appl. No.: **12/209,959**

(22) Filed: **Sep. 12, 2008**

Related U.S. Application Data

(60) Provisional application No. 61/073,254, filed on Jun. 17, 2008.

Publication Classification

(51) **Int. Cl.**
B23K 26/00 (2006.01)

(52) **U.S. Cl.** **219/121.72**; 219/121.67

(57) **ABSTRACT**

Systems and methods reduce or prevent back-reflections in a laser processing system. A laser processing system includes a laser source to generate an incident laser beam, a laser beam output to direct the incident laser beam toward a work surface, and a lens to receive the incident laser beam along a first axis of propagation that is substantially perpendicular to the work surface. The lens includes a primary axis that is substantially parallel to, and offset from, the first axis of propagation. The lens is configured to focus the incident laser beam onto the work surface along a second axis of propagation that forms a non-perpendicular angle with the work surface such that at least a substantial portion of a reflected laser beam from the work surface does not return to the laser beam output.

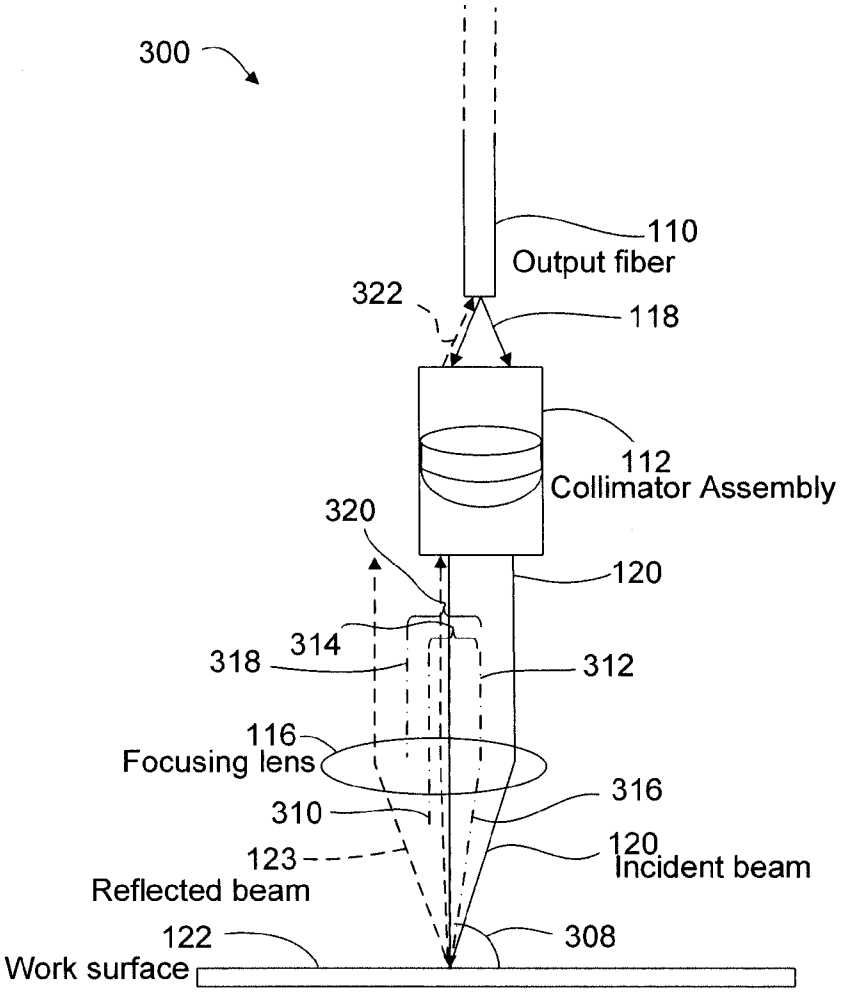

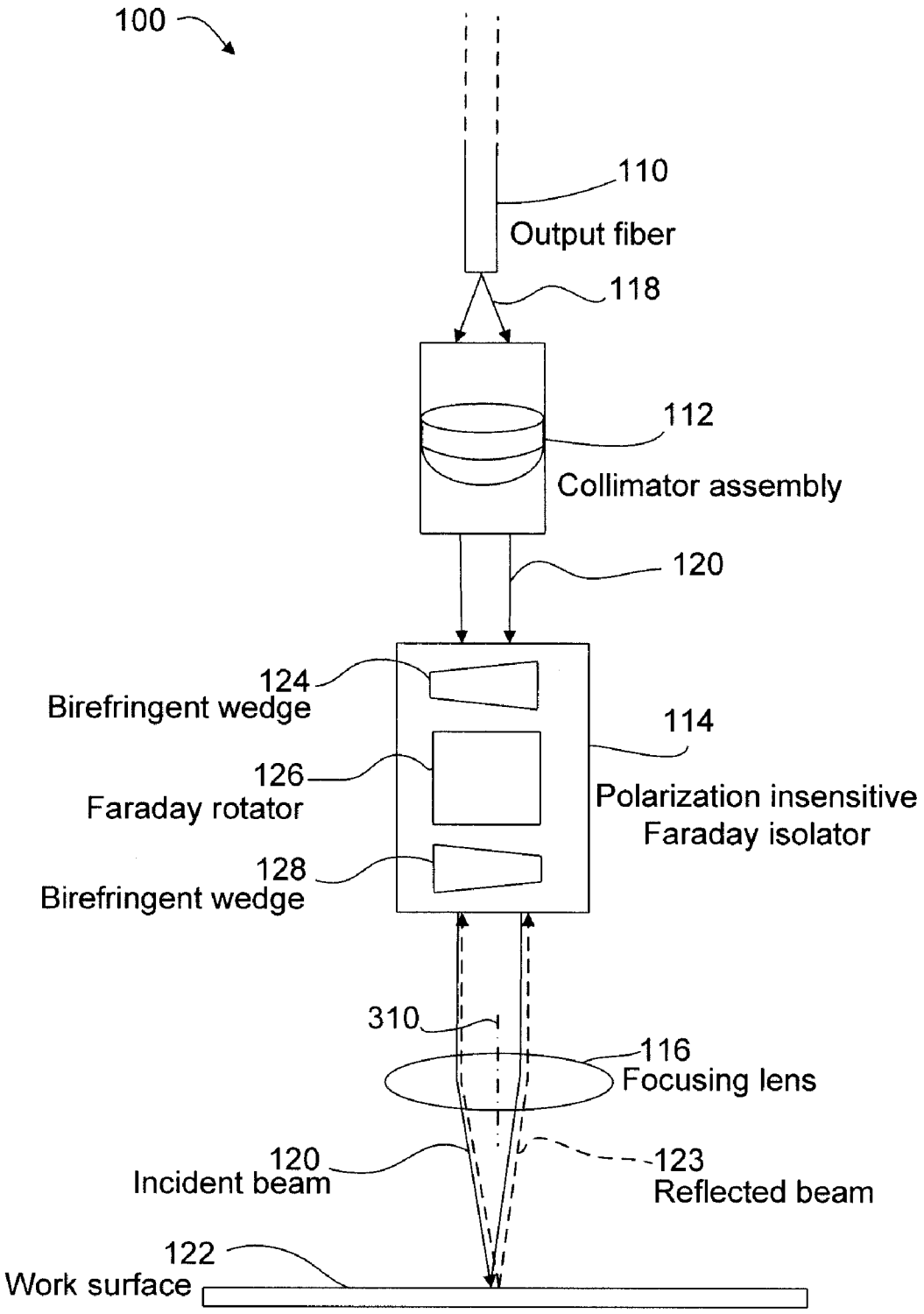

FIG. 1
(Prior Art)

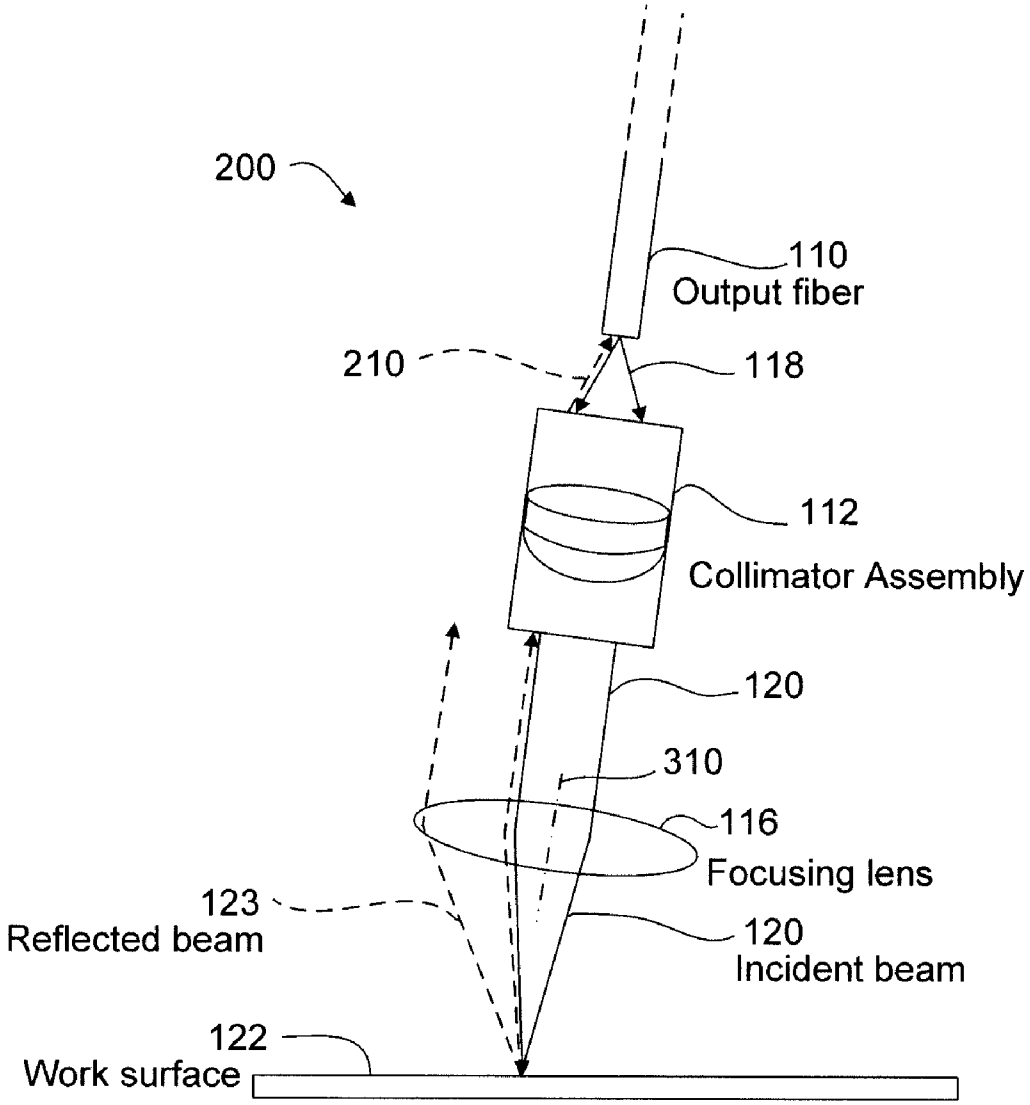

FIG. 2
(Prior Art)

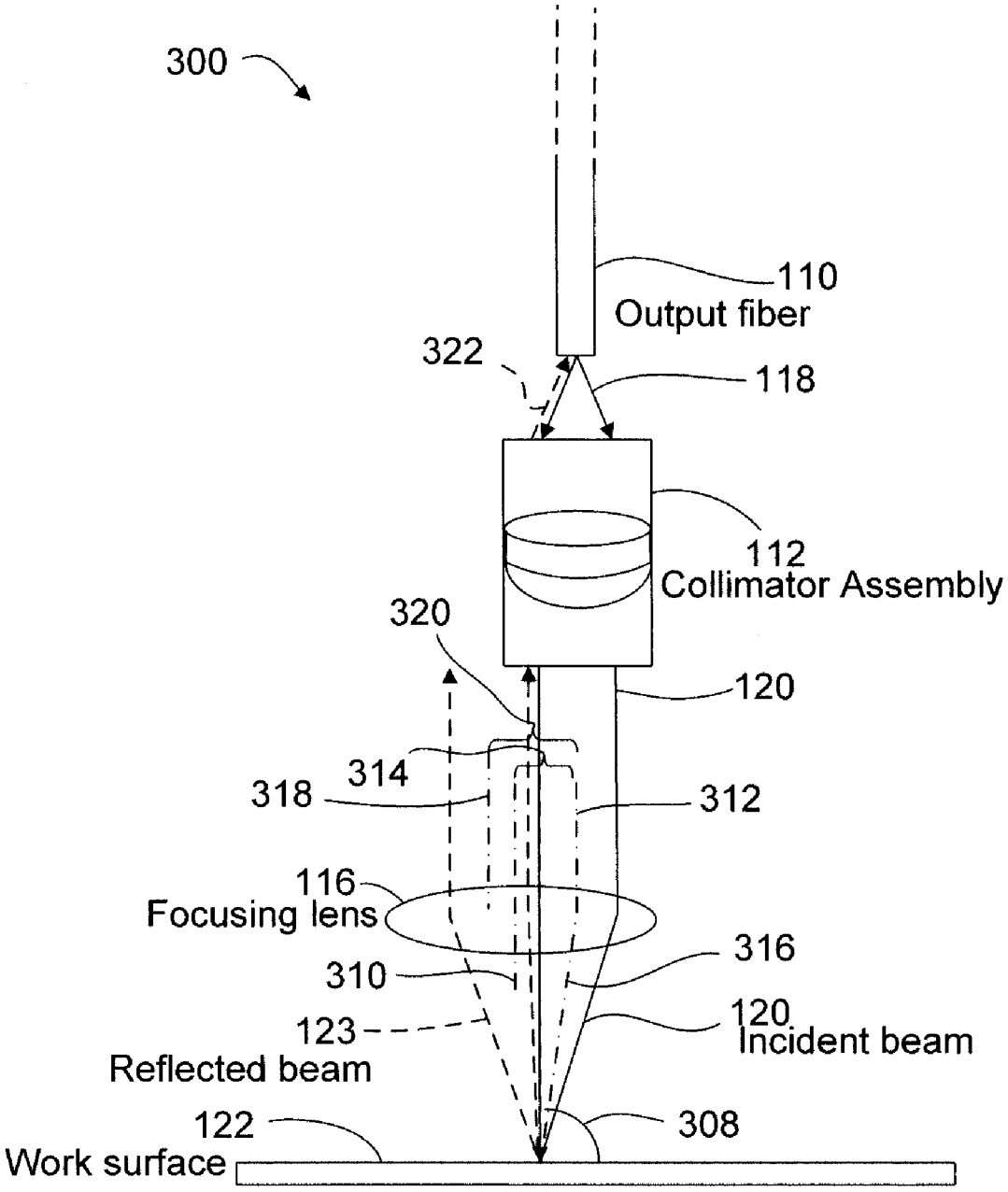
300
110
Output fiber
322
118
112
Collimator Assembly
320
120
314
318
312
116
Focusing lens
316
310
120
Incident beam
123
Reflected beam
122
308
Work surface

FIG. 3

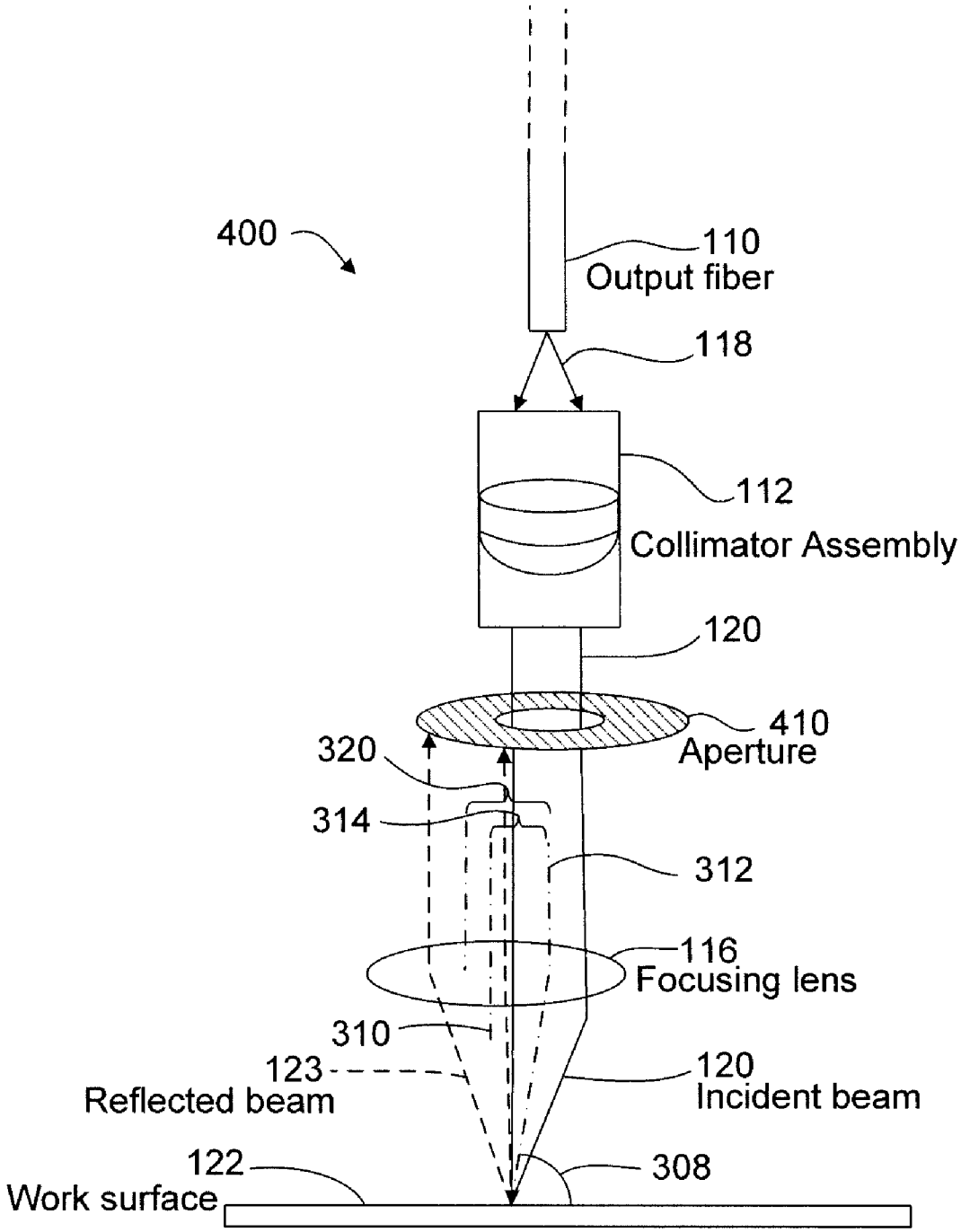
400
110
Output fiber
118
112
Collimator Assembly
120
410
Aperture
320
314
312
116
Focusing lens
310
123
Reflected beam
120
Incident beam
122
Work surface
308

FIG. 4

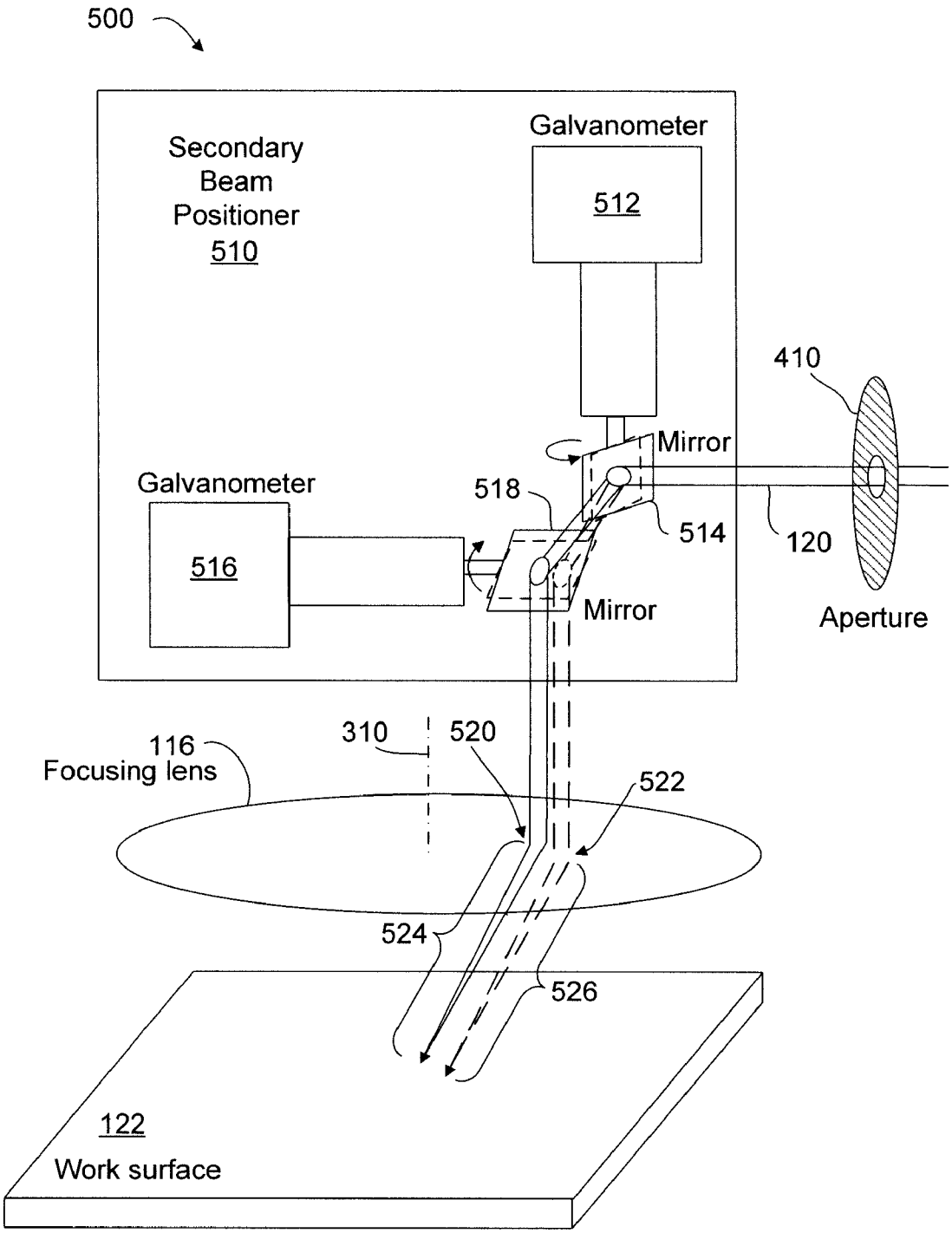
500
Secondary
Beam
Positioner
510
Galvanometer
512
410
Mirror
Galvanometer
518
514
120
516
Mirror
Aperture
116
Focusing lens
310
520
522
524
526
122
Work surface

FIG. 5

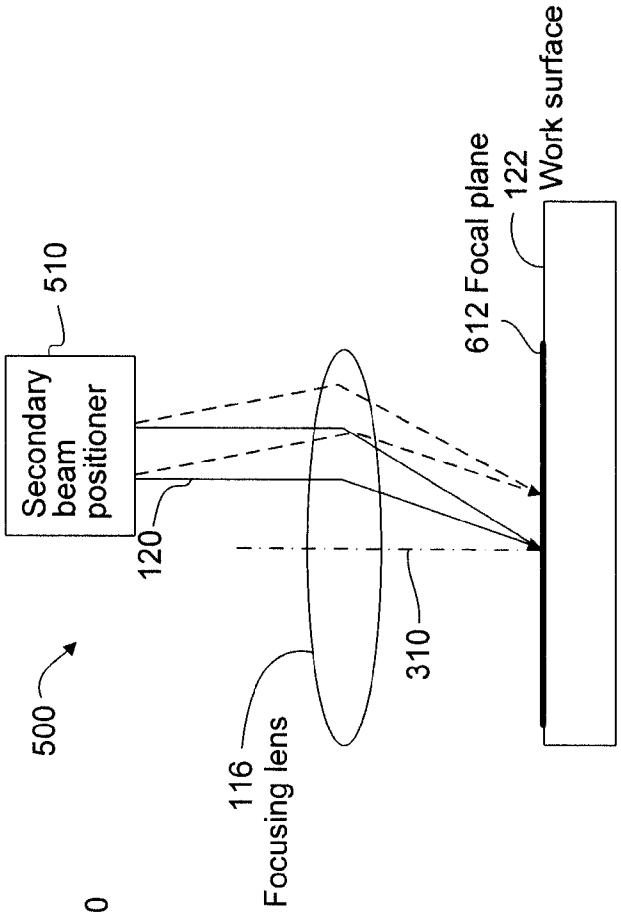
500
Secondary beam positioner
510
120
116
Focusing lens
310
612 Focal plane
122
Work surface

FIG. 6B

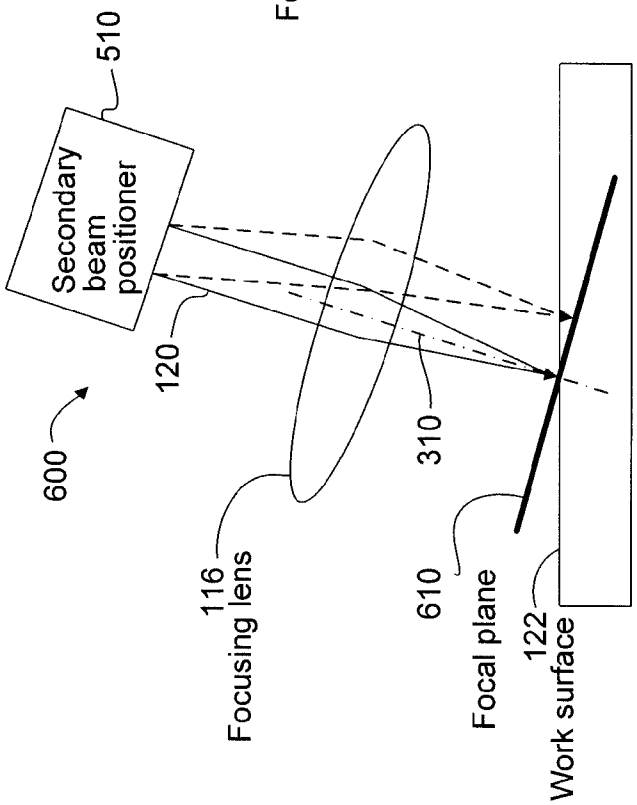
600
Secondary beam positioner
510
120
116
Focusing lens
310
610
Focal plane
122
Work surface

FIG. 6A

REDUCING BACK-REFLECTIONS IN LASER PROCESSING SYSTEMS

RELATED APPLICATION

[0001] This application claims the benefit under 35 U.S.C. §119(e) of U.S. Provisional Application No. 61/073,254, filed Jun. 17, 2008, which is hereby incorporated by reference herein in its entirety.

TECHNICAL FIELD

[0002] This disclosure relates to processing materials with lasers. In particular, this disclosure relates to reducing laser beam back-reflection.

BACKGROUND INFORMATION

[0003] Generally, certain lasers may be sensitive to optical feedback such as a laser beam reflected back to the laser from a work surface. For example, fiber lasers are typically very sensitive to back-reflections from a work surface. If such reflections are not properly blocked, e.g., if there is a return path for such reflections to couple back into an output fiber, it is possible that both the output fiber and gain fibers may be damaged. Further, a seed laser may be damaged in a high-power master oscillator fiber amplifier device by reflected light that is amplified on its way back to the seed laser. In many laser processing systems, such as laser micromachining systems, it is therefore desirable to prevent such back-reflections from finding a path back into the output fiber.

[0004] One solution for reducing or avoiding back-reflection in laser processing systems is to use a Faraday isolator, such as the isolators manufactured by Electro-Optics Technology, Inc. of Traverse City, Mich. Placing a Faraday isolator in the beam path after the output fiber blocks the back-reflections in free-space before they return to the output fiber. For example, FIG. **1** is a block diagram of a typical fiber laser processing system **100** that includes an output fiber **110**, a collimator assembly **112**, a Faraday isolator **114**, and a focusing lens **116**. The output fiber **110** directs a divergent laser beam **118** from a laser source (not shown) to the collimator assembly **112**. The collimator assembly **112** collimates the divergent laser beam **118** to provide a collimated laser beam **120** to the Faraday isolator **114**.

[0005] The Faraday isolator **114** allows the transmission of light in only one direction. The collimated laser beam **120** transmits through the Faraday isolator **114** to the focusing lens **116**, which focuses the beam onto a work surface **122**. Because the incident laser beam's path is perpendicular to the work surface **122**, a reflected laser beam **123** (shown in dashed lines) travels along the same path as that of the incident laser beam **120**, in the reverse direction, through the focusing lens **116** to the Faraday isolator **114**. The Faraday isolator **114**, however, prevents the reflected laser beam from continuing along the reverse path back to the output fiber **110**.

[0006] If the laser beam **118** exiting the output fiber **118** is randomly polarized (as it often is), the Faraday isolator **114** is configured to be polarization insensitive. As shown in FIG. **1**, for example, a polarization insensitive Faraday isolator **114** may include an input birefringent wedge **124**, a Faraday rotator **126**, and an output birefringent wedge **128**. While such isolators are commercially available, they are usually quite bulky (especially when configured for use with high-power beams) and expensive.

[0007] Another approach to reduce or avoid back-reflections is to "tilt" the entire beam delivery subsystem with respect to the work surface **122** so that the angle of incidence of the beam hitting the work surface is not 90 degrees. For example, FIG. **2** is a block diagram of another typical fiber laser processing system **200** having a tilted beam delivery subsystem (e.g., the output fiber **110**, the collimator assembly **112**, and the focusing lens **116**) such that the path of the incident laser beam **120** is non-perpendicular to the work surface **122**.

[0008] As a consequence of tilting the beam delivery subsystem, the path of the reflected laser beam **123** from the work surface **122** is angularly separated from the path of the incident laser beam **120**. A portion **210** of the reflected laser beam **123** may propagate back through the focusing lens **116** to the output fiber **110**. However, the angular separation between the path of the incident laser beam **120** and the reflected laser beam **123** corresponds to a spatial separation which, in turn, substantially prevents the back-reflected beam **123** from coupling into the output fiber **110**. The amount of spatial separation between the paths of the incident laser beam **120** and the reflected laser beam **123** is proportional to the focal length of the focusing lens **116** and the angular tilt (with respect to the work surface **122**) of the beam delivery subsystem. Thus, the amount of spatial separation may be increased by increasing either the focal length, the angular tilt, or both the focal length and the angular tilt.

[0009] As discussed below, while tilting the entire beam delivery subsystem with respect to the work surface **122** reduces back-reflections, it also tilts the focal plane with respect to the work surface **122**. This leads to variations in the spot size and fluence at the work surface **122**. These variations deteriorate process performance.

SUMMARY OF THE DISCLOSURE

[0010] Disclosed systems and methods reduce or prevent back-reflections in a laser processing system. In one embodiment, a laser processing system includes a laser source to generate an incident laser beam, a laser beam output to direct the incident laser beam toward a work surface, and a lens to receive the incident laser beam along a first axis of propagation that is substantially perpendicular to the work surface. The lens includes a primary axis that is substantially parallel to, and offset from, the first axis of propagation. The lens is configured to focus the incident laser beam onto the work surface along a second axis of propagation that forms a non-perpendicular angle with the work surface such that at least a substantial portion of a reflected laser beam from the work surface does not return to the laser beam output.

[0011] In addition, or in another embodiment, the system also includes a beam-stop located between the laser beam output and the work surface to block another portion of the reflected laser beam from returning along a path to the laser beam output.

[0012] In addition, or in another embodiment, the system further includes a secondary beam positioner located between the laser beam output and the lens to scan the incident laser beam across the lens.

[0013] In another embodiment, a method includes generating an incident laser beam, propagating the incident laser beam along a first axis of propagation to a lens, and changing a path of the incident laser beam from the first axis of propa-

gation to a second axis of propagation with the lens. The second axis of propagation forms a non-perpendicular angle with the work surface.

[0014] Additional aspects and advantages will be apparent from the following detailed description of preferred embodiments, which proceeds with reference to the accompanying drawings.

BRIEF DESCRIPTION OF THE DRAWINGS

[0015] Non-limiting and non-exhaustive embodiments of the disclosure are described, including various embodiments of the disclosure with reference to the figures, in which:

[0016] FIG. **1** is a block diagram of a typical fiber laser processing system that includes a Faraday isolator to reduce back-reflections;

[0017] FIG. **2** is a block diagram of another typical fiber laser processing system having a tilted beam delivery subsystem to reduce back reflections;

[0018] FIG. **3** is a block diagram of a laser processing system that reduces or substantially prevents back-reflections according to one embodiment;

[0019] FIG. **4** is a block diagram of a laser processing system that includes an aperture that allows propagation of an incident laser beam and blocks the propagation of a reflected laser beam according to one embodiment;

[0020] FIG. **5** is a block diagram of a laser processing system that includes a secondary beam positioner to scan the incident laser beam across the focus lens according to one embodiment; and

[0021] FIGS. **6**A and **6**B are block diagrams of respective laser processing systems that compare focal planes when using a secondary beam positioner according to certain embodiments.

DETAILED DESCRIPTION OF PREFERRED EMBODIMENTS

[0022] Various systems and methods disclosed herein reduce or prevent back-reflections from coupling into an output fiber of a laser processing system without using bulky and/or expensive isolators. In one embodiment, a focusing lens is placed in the beam path at an offset distance from the beam propagation axis so as to impart a non-vertical "angle-of-attack" to the incident beam with respect to the work surface. This provides a spatial separation between incident and reflected beam paths without tilting the entire beam delivery subsystem with respect to the work surface. In one embodiment, an aperture further blocks the laser beam from reaching the output fiber. In addition, or in another embodiment, a secondary beam positioner scans an incident laser beam across the focusing lens at an offset from the focusing lens's primary axis such that a scanning focal plane is substantially parallel to the work surface.

[0023] Reference is now made to the figures in which like reference numerals refer to like elements. In the following description, numerous specific details are provided for a thorough understanding of the embodiments disclosed herein. However, those skilled in the art will recognize that the embodiments can be practiced without one or more of the specific details, or with other methods, components, or materials. Further, in some cases, well-known structures, materials, or operations are not shown or described in detail in order to avoid obscuring aspects of the embodiments. Furthermore, the described features, structures, or characteristics may be combined in any suitable manner in one or more embodiments.

[0024] FIG. **3** is a block diagram of a laser processing system **300** that reduces or substantially prevents back-reflections according to one embodiment. The system **300** creates a spatial separation between the paths of an incident laser beam **120** and a reflected laser beam **123** (shown in dashed lines) by providing the incident laser beam **120** on a work surface **122** at an angle **308** other than 90 degrees. This change in the incident beam's "angle of attack" **308** is not, however, achieved by tilting the beam delivery assembly, as discussed above with respect to FIG. **2**.

[0025] The system **300** includes a fiber laser source (not shown) having an output fiber **110**. In the examples disclosed herein, fiber-based lasers are discussed because such lasers are sensitive to back-reflections. An artisan will recognize from the disclosure herein, however, that other types of lasers may also be sensitive to back-reflections and that any type of laser source may be used. Accordingly, other types of lasers may have laser beam outputs other than the output fiber **110** discussed herein. Indeed, a laser beam output may include a combination of various optical elements used to guide a laser beam's path before the beam is focused onto a work surface **122**.

[0026] The system **300** shown in FIG. **3** further includes a collimator assembly **112** and a focusing lens **116**. The output fiber **110** directs a divergent laser beam **118** to the collimator assembly **112**. The collimator assembly **112** collimates the divergent laser beam **118** such that the incident laser beam **120** on the focusing lens **116** is substantially collimated. The focusing lens **116** is a converging lens and is substantially symmetrical about its primary axis **310**. The primary axis **310** of the focusing lens **116** is substantially perpendicular to the work surface **122**.

[0027] The incident laser beam **120** propagates along a first axis of propagation **312** from the collimator assembly **112** to the focusing lens **116**. The first axis of propagation **312** is substantially parallel to the primary axis **310** of the focusing lens **116**. There is, however, an offset **314** between the first axis of propagation **312** of the incident laser beam **120** and the primary axis **310** of the focusing lens **116**. In other words, the (collimated) incident laser beam **120** does not hit the focusing lens **116** at the center of the lens **116** (as in the standard layouts shown in FIGS. **1** and **2**). Rather, the incident laser beam **120** hits the focusing lens **116** at an offset **314** from the center of the lens **116**. In one embodiment, the amount of offset **314** is greater than or equal to approximately one-half the diameter of the collimated incident laser beam **120**. As discussed below, such an amount of offset **314** reduces or prevents overlap between the reflected laser beam **123** and the incident laser beam **120**.

[0028] The focusing lens **116** converges the incident laser beam **120** to a focused spot diameter on the work surface **122**. As a result of the asymmetric arrangement provided by the offset **314** between the first axis of propagation **312** of the incident laser beam **120** and the primary axis **310** of the focusing lens **116**, the focusing lens **116** "tilts" the incident laser beam **120** toward the primary axis **310** of the focusing lens **116**. Thus, the focusing lens **116** changes the incident laser beam's path from the first axis of propagation **312** to a second axis of propagation **316** that intersects the work surface **122** at a non-perpendicular angle of attack **308**.

[0029] As a consequence of using the offset **314** to tilt the incident laser beam **120**, the path of the reflected laser beam **123** is angularly separated from the path of the incident laser beam **120**. Thus, after returning through the focusing lens **116**, the reflected laser beam **123** travels along a third axis of propagation **318** that is spatially separated from the first axis of propagation **312** of the incident laser beam **120**. In certain embodiments, an offset **320** between the first axis of propagation **312** corresponding to the incident laser beam **120** and the third axis of propagation **318** corresponding to the reflected laser beam **123** is configured such that the reflected laser beam **123** does not overlap with the incident laser beam **120**. Thus, all or at least a substantial portion of the reflected laser beam **123** does not return through the collimator assembly **118** to the output fiber **110**.

[0030] As shown in FIG. **3**, there may be situations in which a small portion **322** of the reflected laser beam **123** couples back into the output fiber **110**. This may be undesirable in some embodiments. Thus, in certain such embodiments, a beam-stop is located anywhere between the output fiber **110** and the work surface **122** to prevent the remaining portion **322** of the reflected laser beam **123** from returning to the output fiber **110**. For example, a mirror (not shown) may be place between the collimator assembly **118** and the focusing lens **116** to direct substantially all of the reflected laser beam **123** away from the collimator assembly **118** (e.g., to a beam dump). Such a mirror may be sized and positioned so as not to interfere with the collimated incident laser beam **120**.

[0031] Other devices may also be used as a beam-stop. For example, FIG. **4** is a block diagram of a laser processing system **400** that includes an aperture **410** that allows propagation of the incident laser beam **120** and blocks the propagation of the reflected laser beam **123** according to one embodiment. The aperture **410** has an opening that is substantially centered about the first axis of propagation of the incident laser beam **120**. In one embodiment, the aperture **410** is greater than or substantially equal to the diameter of the (collimated) incident laser beam **120** so as to allow the incident laser beam **120** to pass from the collimator assembly **118** to the focusing lens **116**.

[0032] In one embodiment, the system **400** is configured such that the spatial separation **320** between the paths of the incident laser beam **120** and the reflected laser beam **123** (as determined by the focal length of the focusing lens **116** and the amount of offset **314** between the first axis of propagation **312** of the incident laser beam **120** and the primary axis **310** of the lens **116**) is in a range between approximately 1.5 times and 2.0 times the diameter of the collimated incident laser beam **120**. Thus, by selecting the aperture **410** such that it has a comparable opening diameter to that of the incident laser beam **120**, the likelihood of any significant back-reflections propagating to the output fiber **110** is substantially reduced.

[0033] In addition, or in another embodiment, the offset lens **116** and/or the beam-stop (e.g., the aperture **410** shown in FIG. **4**) is combined with a secondary beam positioner that is inserted at a location between the beam-stop and the focusing lens **116**. For example, FIG. **5** is a block diagram of a laser processing system **500** that includes a secondary beam positioner **510** to scan the incident laser beam **120** across the focus lens **116** according to one embodiment. The secondary beam positioner **510** receives the collimated incident laser beam **120** (e.g., after it passes through the opening in the aperture **410**) and steers the path of the incident laser beam **120** along the focusing lens **116** at an offset from the lens's primary axis **310**.

[0034] In one embodiment, as shown in FIG. **5**, the secondary positioning system **510** is configured to steer the incident laser beam **120** in two directions. A first galvanometer **512** adjusts a first mirror **514** to steer the incident laser beam **120** in a first direction, and a second galvanometer **516** adjusts a second mirror **518** to steer the incident laser beam **120** in a second direction. An artisan will recognize from the disclosure herein that other secondary beam positioner configurations may also be used.

[0035] FIGS. **5**, **6**A, and **6**B illustrate one of the advantages of the embodiments disclosed herein, as compared to the standard "tilted beam delivery assembly" approach shown in FIG. **2**. Namely, in the disclosed embodiments, the beam path length from the focusing lens **116** to the point of impact on the work surface **122** remains substantially constant even as the secondary beam positioner **510** scans the incident laser beam **120** across the surface of the focusing lens **116**. Referring to FIG. **5**, as the secondary beam positioner **510** changes the path of the incident laser beam **120** from a first position **520** to a second position **522** with respect to the focusing lens **116**, the length of the beam path **524** from the first position **520** to the work surface **122** remains substantially equal to the length of the beam path **526** from the second position **522** to the work surface **122**. Note that in this example the path of the incident laser beam **120** from the first mirror **514**, to the second mirror **518**, through the second position **522** on the focusing lens **116**, and to the work surface **122** is shown with a dashed line.

[0036] FIGS. **6**A and **6**B are block diagrams of respective laser processing systems that compare focal planes when using a secondary beam positioner **510** according to certain embodiments. FIG. **6**A shows the beam positioner **510** used in a system **600** having a tilted beam delivery subsystem. In the embodiment shown in FIG. **6**A, the primary axis **310** of the focusing lens **116** is non-perpendicular to the work surface **122**. Thus, as the secondary beam positioner **510** scans the incident laser beam **120** through the primary axis **310** and other points along the focusing lens **116**, the focal plane **610** shifts. The focal plane **610** shown in FIG. **6**A is substantially perpendicular to the "tilted" primary axis **310** of the focusing lens **116**. The ensuing variation in work surface spot size and fluence may deteriorate process performance.

[0037] This problem is reduced or avoided by the embodiments disclosed herein. For example, FIG. **6**B illustrates a simplified version of the system **500** shown in FIG. **5**, in which the primary axis **310** of the focusing lens **116** is substantially perpendicular to the work surface **122**. Thus, as the secondary beam positioner **510** scans the incident laser beam **120** at one or more offsets along the focusing lens **116**, the focal plane **612** remains substantially parallel to the work surface **122**.

[0038] The disclosed embodiments are much simpler and cheaper to implement, as compared to the standard approach of inserting a Farday isolator **114** (see FIG. **1**) into the beam path. The disclosed embodiments are also superior to the beam delivery assembly tilting approach (see FIG. **2**) because they provide a constant beam path length from the focusing lens **116** to the work surface **122**, even in the presence of a secondary beam positioner **510** that scans the incident laser beam **120** across the surface of the focusing lens **116**.

[0039] While the systems and methods described herein address back-reflection problems associated with a fiber laser

based system, those skilled in the art will recognize that the approach is just as valid for systems that utilize other types of lasers as well.

[0040] It will be understood by those having skill in the art that many changes may be made to the details of the above-described embodiments without departing from the underlying principles of the invention. The scope of the present invention should, therefore, be determined only by the following claims.

1. A laser processing system that reduces or substantially prevents back-reflections, the system comprising:

a laser source to generate an incident laser beam;

a laser beam output to direct the incident laser beam toward a work surface; and

a lens to receive the incident laser beam along a first axis of propagation that is substantially perpendicular to the work surface,

wherein the lens comprises a primary axis that is substantially parallel to, and offset from, the first axis of propagation, and

wherein the lens is configured to focus the incident laser beam onto the work surface along a second axis of propagation that forms a non-perpendicular angle with the work surface such that at least a substantial portion of a reflected laser beam from the work surface does not return to the laser beam output.

2. The system of claim **1**, further comprising a beam-stop located between the laser beam output and the work surface to block another portion of the reflected laser beam from returning along a path to the laser beam output.

3. They system of claim **2**, wherein the beam-stop is located between the laser beam output and the lens, wherein the beam-stop comprises an aperture substantially centered about the first axis of propagation of the incident laser beam, and wherein the aperture is greater than or substantially equal to the incident laser beam's diameter to allow the incident laser beam to pass from the laser beam output to the lens.

4. The system of claim **1**, further comprising a secondary beam positioner located between the laser beam output and the lens to scan the incident laser beam across the lens.

5. The system of claim **4**, wherein the secondary beam positioner changes the path of the incident laser beam from a first position to a second position with respect to the lens, and wherein the path of the incident laser beam from the lens to the work surface remains substantially constant between the first position and the second position such that the focal plane is substantially parallel to the work surface.

6. The system of claim **4**, wherein the secondary beam positioner comprises a pair of galvanometer-driven mirrors.

7. The system of claim **1**, wherein the laser source comprises a fiber laser.

8. The system of claim **1**, wherein the laser beam output comprises an optical fiber.

9. The system of claim **1**, further comprising a collimator located between the laser beam output and the lens.

10. The system of claim **1**, wherein the offset between the primary axis of the lens and the first axis of propagation of the incident beam is greater than or equal to approximately one-half of the incident laser beam's diameter.

11. A method for processing a workpiece with a laser, the method comprising:

generating an incident laser beam;

propagating the incident laser beam along a first axis of propagation to a lens; and

changing a path of the incident laser beam from the first axis of propagation to a second axis of propagation with the lens,

wherein the second axis of propagation forms a non-perpendicular angle with the work surface.

12. The method of claim **11**, wherein changing the path of the incident laser beam comprises locating a primary axis of the laser beam at an offset with the first axis of propagation.

13. The method of claim **12**, wherein the offset between the primary axis of the lens and the first axis of propagation of the incident beam is greater than or equal to approximately one-half of the incident laser beam's diameter.

14. The method of claim **11**, further comprising blocking at least a portion of a reflected beam from propagating along the first axis of propagation.

15. The method of claim **14**, further comprising passing the incident laser beam through an aperture centered about the first axis of propagation, the aperture being greater than or approximately equal to the incident beam's diameter.

16. The method of claim **11**, further comprising scanning the incident beam across the lens using a secondary beam positioner so as to maintain substantially equal beam path lengths between the focusing means and the work surface during the scan.

17. The method of claim **11**, substantially collimating the incident laser beam as it propagates along the first axis of propagation.

18. A laser processing system comprising:

generating means for generating an incident laser beam;

output means for directing the incident laser beam toward a work surface; and

focusing means for focusing the incident laser beam on the work surface, wherein the focusing means comprises a first axis of propagation that is substantially perpendicular to the work surface, and wherein a primary axis of the focusing means is offset from the first axis of propagation so as to redirect the incident laser beam from the first axis of propagation to a second axis of propagation that is non-perpendicular to the work surface.

19. The system of claim **18**, further comprising aperture means for allowing the incident beam to pass from the output means to the focusing means, and for blocking at least a portion of a reflected beam from passing from the focusing means to the output means.

20. The system of claim **19**, further comprising beam positioning means for scanning the incident beam across the focusing means so as to maintain substantially equal beam path lengths between the focusing means and the work surface during the scan.

* * * * *