US008783886B2

(12) **United States Patent**
Huang

(10) **Patent No.: US 8,783,886 B2**
(45) **Date of Patent: Jul. 22, 2014**

(54) **ILLUMINATION SYSTEM**

(75) Inventor: **June-Jei Huang**, Taoyuan Hsien (TW)

(73) Assignee: **Delta Electronics, Inc.**, Taoyuan Hsien (TW)

(*) Notice: Subject to any disclaimer, the term of this patent is extended or adjusted under 35 U.S.C. 154(b) by 487 days.

(21) Appl. No.: **13/169,443**

(22) Filed: **Jun. 27, 2011**

(65) **Prior Publication Data**

US 2012/0182712 A1 Jul. 19, 2012

(30) **Foreign Application Priority Data**

Jan. 19, 2011 (TW) ..... 100101899 A

(51) **Int. Cl.**
F21V 9/00 (2006.01)
G02B 5/26 (2006.01)
F21V 5/02 (2006.01)

(52) **U.S. Cl.**
CPC ***G02B 5/26*** (2013.01); ***F21V 5/02*** (2013.01)
USPC **362/34**; 362/231; 362/293

(58) **Field of Classification Search**
CPC G02B 5/26; F12V 5/02; F12V 7/0083; F12V 7/07; F12V 9/00; F21S 48/1317
USPC 353/81, 30, 37, 99; 362/553, 259
See application file for complete search history.

(56) **References Cited**

U.S. PATENT DOCUMENTS

6,299,312 B1 * 10/2001 Choi et al. 353/31
6,733,139 B2 5/2004 Childers et al.
7,493,030 B2 2/2009 Kakkori
7,830,929 B2 11/2010 Egawa

(Continued)

FOREIGN PATENT DOCUMENTS

CN 1898968 1/2007
CN 101233440 7/2008

(Continued)

OTHER PUBLICATIONS

Office Action from related Chinese Appln. No. 201110043239.3 dated Nov. 18, 2013. Summary translation attached.
Office Action from related Taiwanese Appln. No. 100101899 dated Aug. 5, 2013. Summary translation attached.
Office Action from related Taiwanese Appln. No. 100101899 dated Nov. 7, 2013. Summary translation attached.

Primary Examiner — Sharon Payne
(74) *Attorney, Agent, or Firm* — Grossman, Tucker, Perreault & Pfleger, PLLC

(57) **ABSTRACT**

An illumination system for use in a projection device is provided. The illumination system comprises a first light source, a second light source, an optical device, a wavelength transformer and a first dichroic mirror. The first light source and the second light source emit a first light beam and a second light beam respectively. The optical device defines a main optical axis and focuses the first light beam and the second light beam on a first focal point and a second focal point respectively, wherein the first focal point and the second focal point are disposed on two opposite sides of the main optical axis respectively. The wavelength transformer is disposed on the second focal point and transforms the second light beam into a third light beam. The first dichroic mirror is disposed between the light sources and the optical device. The first light beam and the second light beam are allowed to pass through the first dichroic mirror, and the third light beam is reflected by the first dichroic mirror. After being reflected by the first dichroic mirror, the third light beam is focused onto the first focal point.

19 Claims, 6 Drawing Sheets

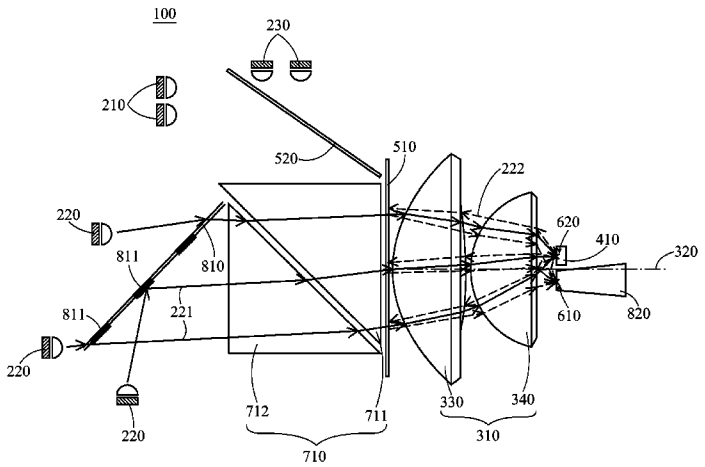

(56) **References Cited**

U.S. PATENT DOCUMENTS

2005/0270775	A1	12/2005	Harbers et al.	
2006/0274277	A1	12/2006	Magarill et al.	
2007/0146639	A1	6/2007	Conner	
2008/0170207	A1	7/2008	Egawa	
2009/0033885	A1*	2/2009	Shirai et al.	353/85
2009/0128781	A1	5/2009	Li	
2009/0262308	A1	10/2009	Ogawa	
2010/0328627	A1	12/2010	Miyazaki	
2012/0062857	A1*	3/2012	Saitou et al.	353/98

FOREIGN PATENT DOCUMENTS

CN	101504506	8/2009
CN	101937127	1/2011
JP	2003-248196	9/2003
JP	2008-134320	6/2008
TW	200410009	6/2004
TW	200620255	6/2006

* cited by examiner

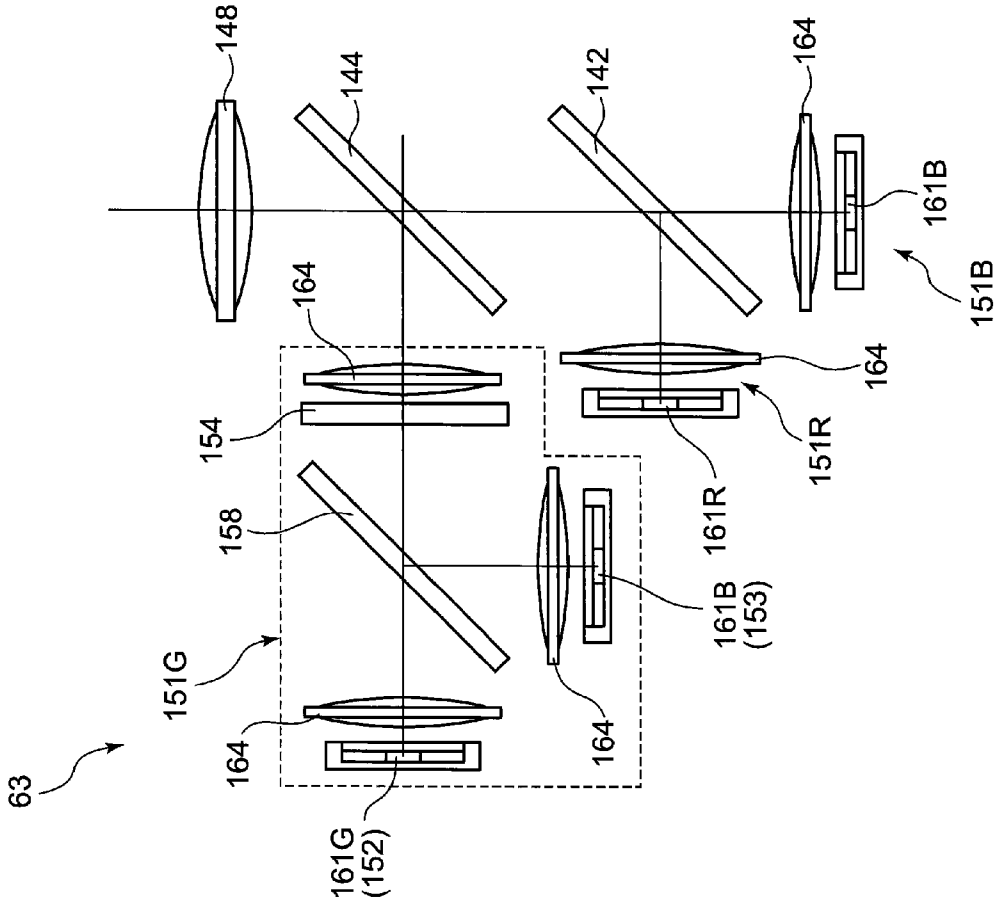
148
144
142
164
161B
151B
164
154
164
151R
161R
158
161B
(153)
151G
164
164
63
161G
(152)

FIG. 1

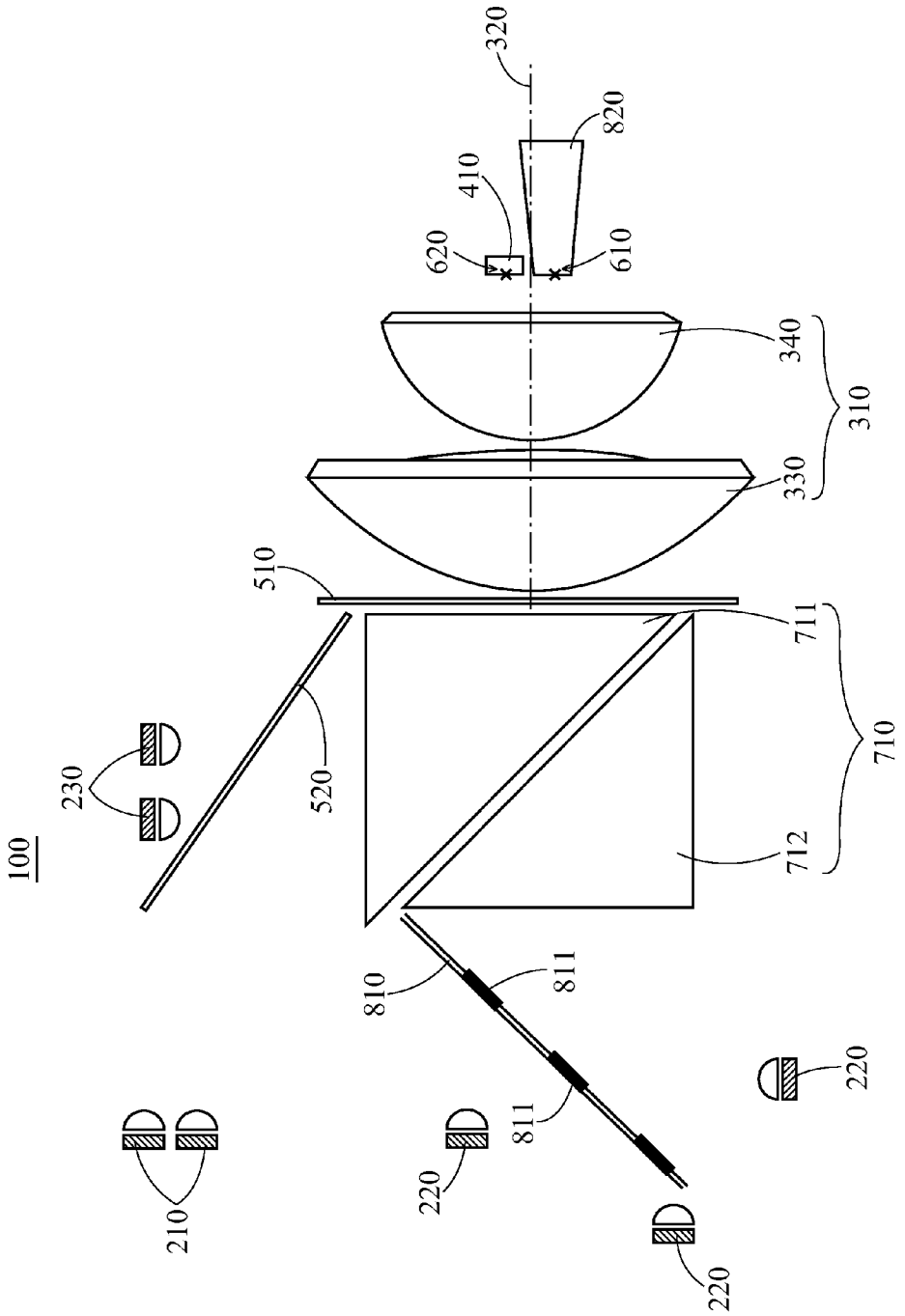
100
230
210
520
510
810
811
811
220
220
220
712
711
710
330
340
310
620
410
610
820
320

FIG. 2

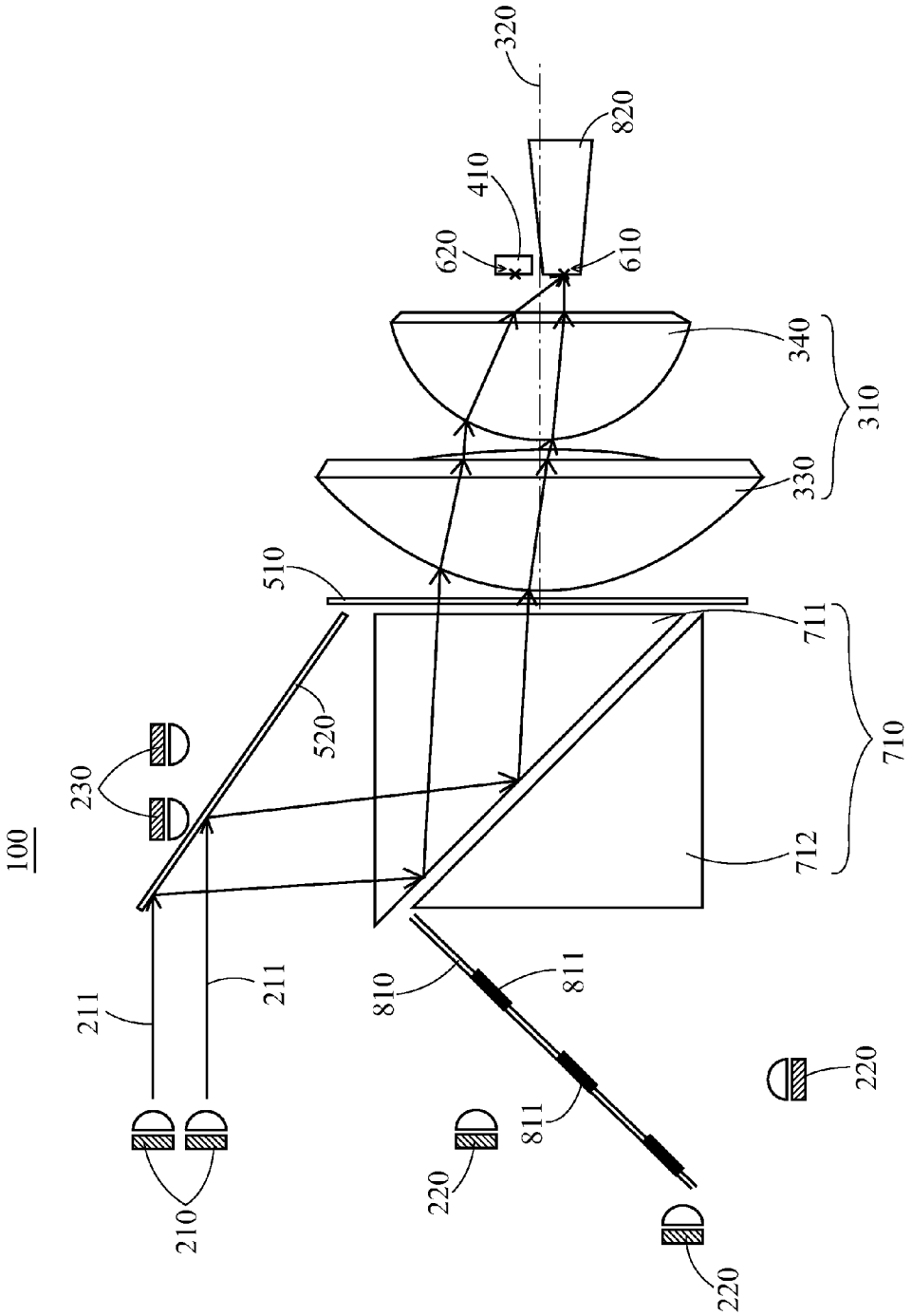
100
210
211
211
230
220
220
220
520
510
810
811
811
712
711
710
330
340
310
620
410
610
820
320

FIG. 3A

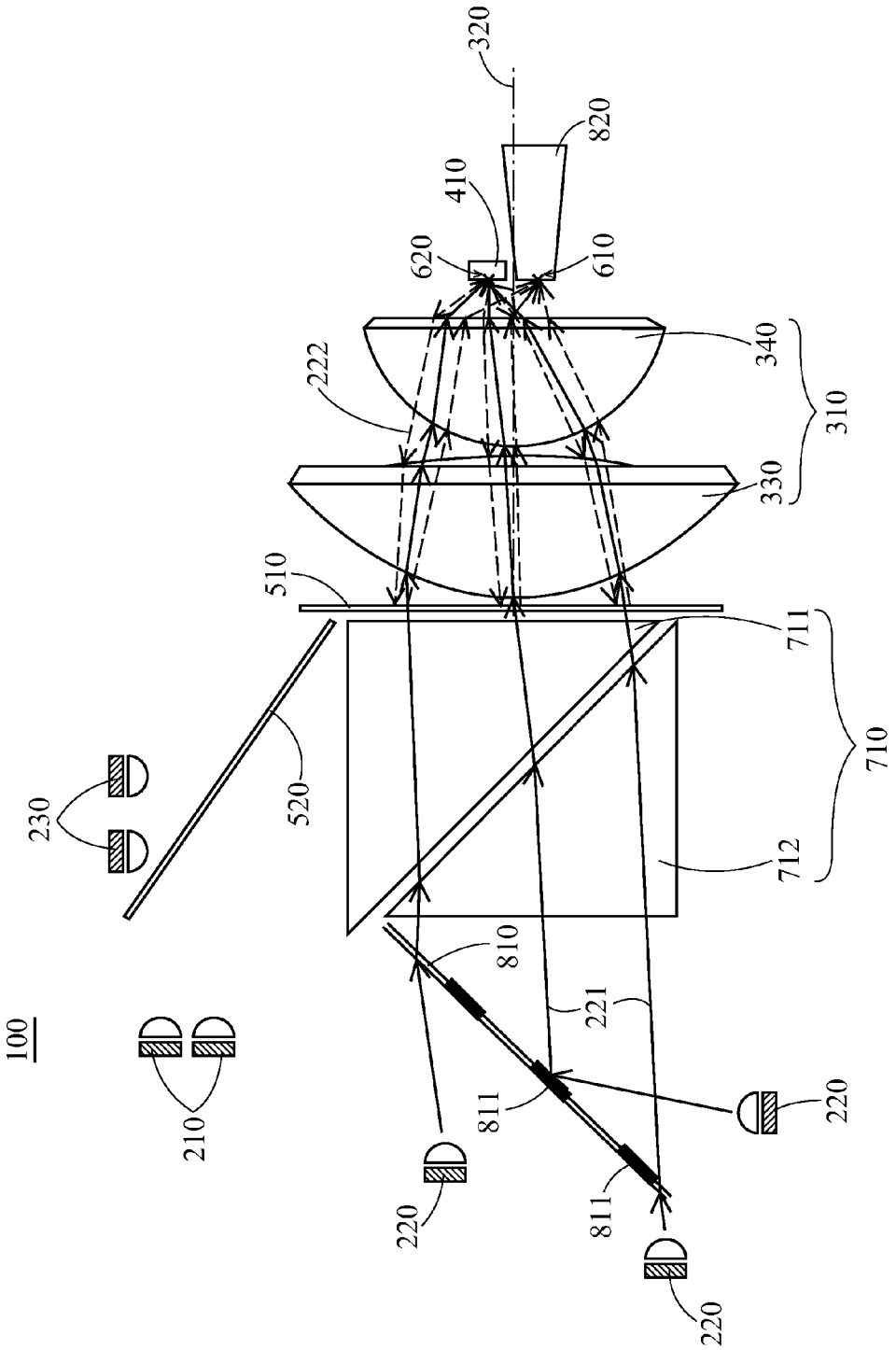
100
210
220
220
220
230
520
510
711
710
712
810
811
811
221
222
340
310
330
620
410
610
820
320

FIG. 3B

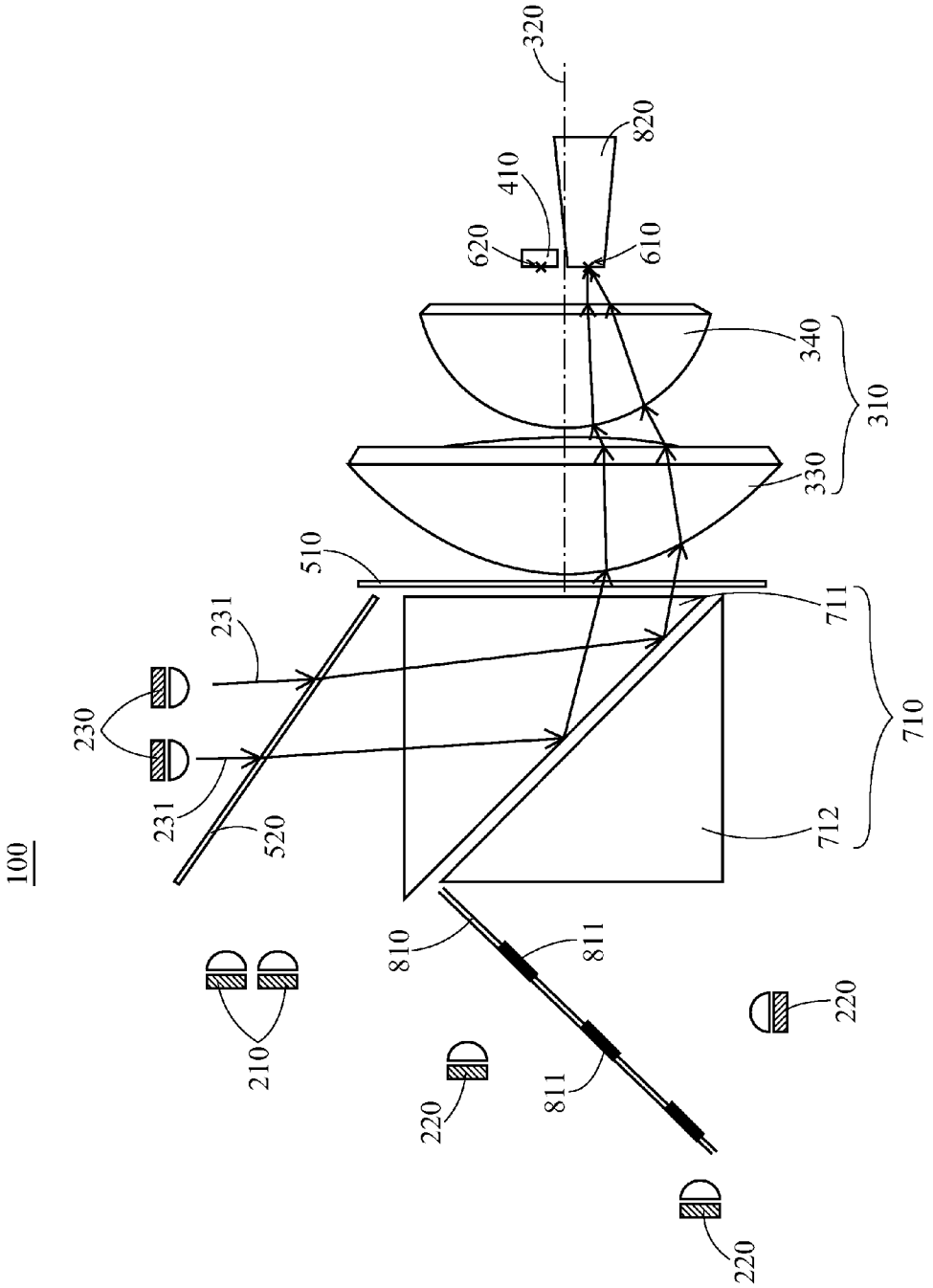
100
320
820
410
620
610
340
310
330
510
711
710
712
231
230
231
520
810
811
811
210
220
220
220

FIG. 3C

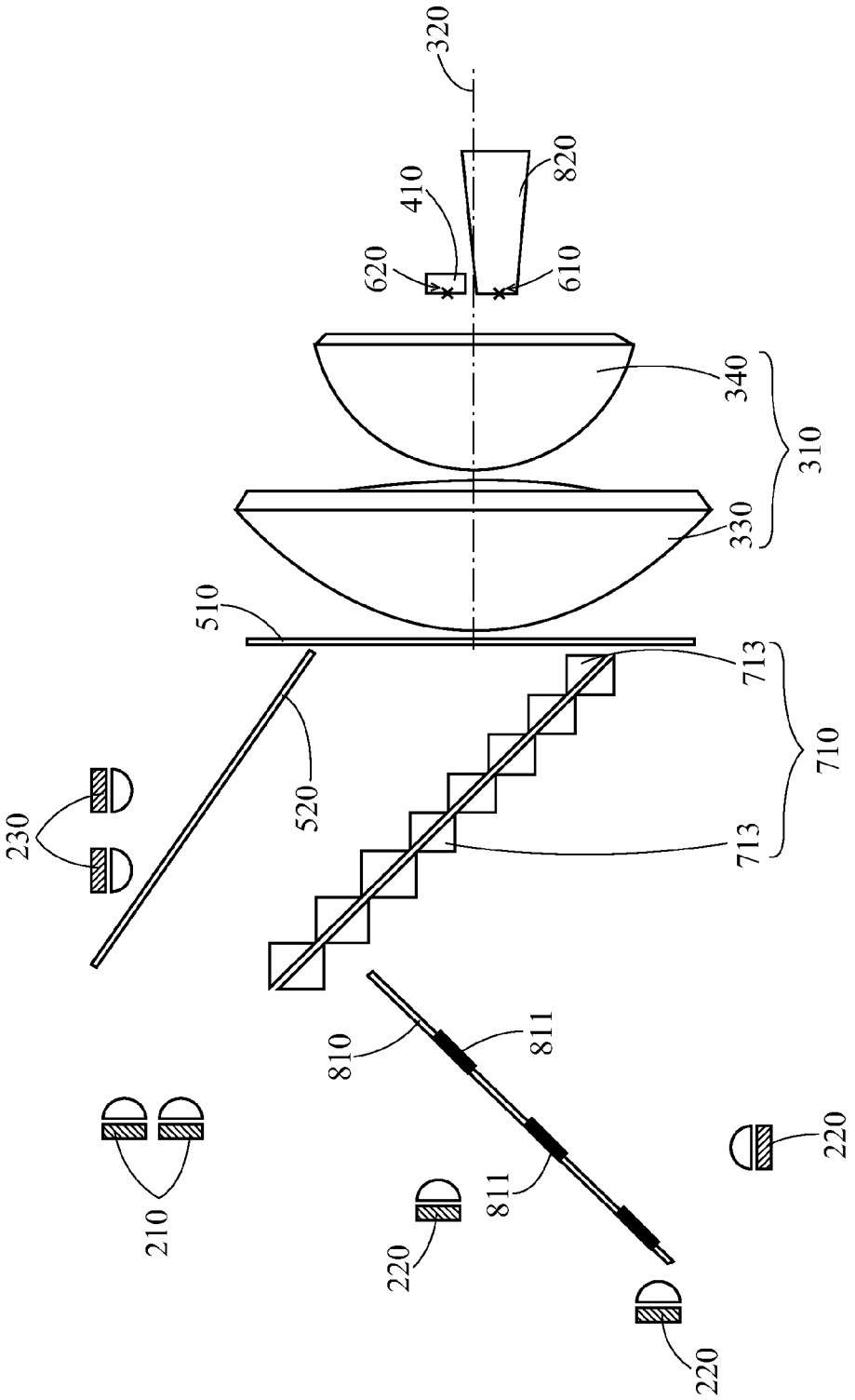
320
410
820
620
610
340
310
330
510
713
710
713
520
230
810
811
811
210
220
220
220

FIG. 4

ILLUMINATION SYSTEM

This application claims the benefit from the priority of Taiwan Patent Application No. 100101899 filed on Jan. 19, 2011, and the disclosure of which is incorporated by reference herein in its entirety.

CROSS-REFERENCES TO RELATED APPLICATIONS

Not applicable.

BACKGROUND OF THE INVENTION

1. Field of the Invention

The present invention provides an illumination system, and more particularly, to an illumination system which is for use in a projection device, has less optical components and can improve the light combining efficiency.

2. Descriptions of the Related Art

Because solid light sources such as lasers and light emitting diodes (LEDs) have advantages, such as saving energy, a high light-emitting efficiency, a concentrated luminance and a long service life, the use of the solid light sources as light sources of projection devices has received much attention in the art. In U.S. Patent Publication No. US 2009/0262308, a light source unit and a projector **10** are disclosed. As shown in FIG. **1**, the light source unit **63** has a red LED **161**R, a green LED **161**G and a blue LED **161**B, and light beams are combined through a plurality of condensing lenses **164** disposed adjacent to the LEDs **161**R, **161**B and **161**G respectively. It shall be noted that the light source unit **63** has to condense the light beams through the condensing lenses **164** disposed adjacent to the LEDs **161**R, **161**B and **161**G to combine the light beams; therefore, in this U.S. Patent Publication, the light source unit **63** has to be provided with a large number of optical components, which increases the weight of the light source unit **63**. Moreover, sufficient space is needed in the projector **10** to accommodate the light source unit **63**. Consequently, this type of light source unit is limited by the volume and is unsuitable for use in a miniaturized projector.

In view of this, an urgent need exists in the art to provide a solution that can effectively arrange a plurality of light sources and optical components in a projector so that the light-emitting efficiency is improved while the volume and the weight of the light emitting source can still be effectively reduced.

SUMMARY OF THE INVENTION

An objective of the present invention is to provide an illumination system in which, by skillfully arranging the individual light sources and optical components, the number of optical components to be used and the volume of the illumination system are reduced and the light combining efficiency of the illumination system is increased.

To achieve the aforesaid objective, an illumination system according to an embodiment of the present invention comprises a first light source, a second light source, a third light source, an optical device, a wavelength transformer and a first dichroic mirror. The first light source and the second light source emit a first light beam and a second light beam respectively. The optical device defines a main optical axis and focuses the first light beam and the second light beam onto a first focal point and a second focal point respectively. In addition, the first focal point and the second focal point are disposed on two opposite sides of the main optical axis respectively. The first dichroic mirror is disposed between the light sources and the optical device, and is adapted to allow the first light beam, the second light beam and the fourth light beam to travel therethrough and to reflect the third light beam. The first and the fourth light beams are focused into the first focal point. The second light beam is focused into the second focal point. The wavelength transformer is disposed at the second focal point and transforms the second light beam into a third light beam. The third light beam emitted from the second focal point then sequentially passes through the optical device, and is then reflected by the first dichroic mirror to the optical device to be focused on the first focal point.

The detailed technology and preferred embodiments implemented for the subject invention are described in the following paragraphs accompanying the appended drawings for people skilled in this field to well appreciate the features of the claimed invention.

BRIEF DESCRIPTION OF THE DRAWINGS

FIG. **1** is a schematic diagram illustrating the prior art of the present invention;

FIG. **2** is a schematic diagram illustrating an embodiment of an illumination system of the present invention;

FIG. **3**A is a schematic diagram illustrating an optical path of the first light beam in an embodiment;

FIG. **3**B is a schematic diagram illustrating an optical path of the second light beam and a third light beam in an embodiment;

FIG. **3**C is a schematic diagram illustrating an optical path of the fourth light beam in an embodiment; and

FIG. **4** is a schematic diagram illustrating another embodiment of the illumination system of the present invention.

DESCRIPTION OF THE PREFERRED EMBODIMENT

As shown in FIG. **2**, an illumination system **100** according to an embodiment of the present invention is disposed in a projection device (not shown), and comprises a first light source **210**, a second light source **220**, an optical device **310**, a wavelength transformer **410** and a first dichroic mirror **510**. In reference to both FIGS. **3**A and **3**B, the first light source **210** emits a first light beam **211**, while the second light source **220** emits a second light beam **221**. Furthermore, the optical device **310** can define a main optical axis **320**, and focuses the first light beam **211** and the second light beam **221** on a first focal point **610** and a second focal point **620** respectively. As shown in FIG. **2**, the first focal point **610** and the second focal point **620** are disposed at two opposite sides of the main optical axis **320** respectively. The first focal point **610** and the second focal point **620** are conjugate with each other, and an included angle defined by the first focal point **610** and the main optical axis **320** is equal to an included angle defined by the second focal point **620** and the main optical axis **320**.

A light homogenizing device **820** has an inlet disposed at the first focal point **610** to receive the first light source **211**, and has an outlet connected to the projection device (not shown) to actually project an image onto a micro-display (not shown) of the projection device.

The wavelength transformer **410** is disposed at the second focal point **620**, and receives and transforms the second light beam **221** emitted by the second light source **220** into a third light beam **222**. The first dichroic mirror **510**, which is disposed between the first and the second light sources **210**, **220** and the optical device **310**, is adapted to allow the first light beam **211** and the second light beam **221** to travel there-

through and reflect the third light beam **222**. In other words, as shown in FIG. **3**B, when the second light beam **221**, emitted by the second light source **220**, is focused by the optical device **310** onto the wavelength transformer **410** that is disposed at the second focal point **620**, the second light beam **221** is transformed into the third light beam **222**. Then, the third light beam **222** is emitted from the second focal point **620** to pass through the optical device **310**, and is then reflected by the first dichroic mirror **510** to the optical device **310** to be focused onto the first focal point **610**.

In detail, in reference to both FIGS. **2** and **3**C together, the illumination system **100** may further comprise a third light source **230** and a light coupling device **710**. The third light source **230** is disposed adjacent to the first light source **210**, and emits a fourth light beam **231** such that the fourth light beam **231** can travel through the first dichroic mirror **510** and be focused by the optical device **310** onto the first focal point **610**. The light coupling device **710** is disposed between the first, the second and the third light sources **210**, **220**, **230** and the first dichroic mirror **510**, and combines and guides the first light beam **211**, the second light beam **221** and the fourth light beam **231** to the optical device **310**.

In an embodiment of the present invention, the light coupling device **710** preferably comprises a first prism **711** and a second prism **712**. It shall be appreciated that in the embodiment shown in FIG. **2**, the first light source **210** and the third light source **230** are disposed on the upper side of the light coupling device **710**, and the second light source **220** is disposed on the left side of the light coupling device. Therefore, as shown in both FIGS. **3**A and **3**C, when the first light source **210**, the second light source **220** and the third light source **230** emit the first light beam **211**, the second light beam **221** and the fourth light beam **231** to the light coupling device **710** respectively, the first light beam **211** and the fourth light beam **231** can be totally reflected by the first prism **711** to the optical device **310** to be focused onto the first focal point **610**. Then, as shown in FIG. **3**B, the second light beam **221** sequentially travels through the second prism **712**, the first prism **711** and the optical device **310**, and is then focused onto the wavelength transformer **410** disposed at the second focal point **620** to be transformed into the third light beam **222**. Meanwhile, as shown in an embodiment in FIG. **4**, the first prism **711** and the second prism **712** may also be formed as two prism arrays **713**, which can also accomplish the propagation of the first light beam **211**, the second light beam **221** and the fourth light beam **231** through the aforesaid optical paths.

Of course, depending on practical requirements, any modifications or adjustments may also be made to the aforesaid arrangement of the first light source **210**, the second light source **220** and the third light source **230**. For example, the positions of the first light source **210** and the third light source **230** are exchanged with the position of the second light source **220** such that the second light source **220** is disposed at the upper side of the light coupling device **710** and the first light source **210** and the third light source **230** are disposed at the left side of the light coupling device; in addition, the position of the light homogenizing device **820** is exchanged with the position of the wavelength transformer **410**. Thus, when the first light source **210**, the second light source **220** and the third light source **230** emit the first light beam **211**, the second light beam **221** and the fourth light beam **231** to the light coupling device **710** respectively, the first light beam **211** and the fourth light beam **231** sequentially travel through the second prism **712**, the first prism **711** and the optical device **310**, and is then focused to the second focal point **620** to travel into the inlet of the light homogenizing device. The second light beam **221** can be totally reflected by the first prism **711** to the optical device **310** to be focused onto the wavelength transformer **410** disposed at the first focal point **610**.

As shown in an embodiment of FIG. **3**A, the illumination system **100** may further have a second dichroic mirror **520** and a mirror array **810**. The second dichroic mirror **520** is disposed between the first light source **210**, the third light source **230** and the light coupling device **710**, and the first light beam **211** emitted by the first light source **210** is reflected by the second dichroic mirror **520** to the light coupling device **710**. Meanwhile, as shown in an embodiment of FIG. **3**C, the fourth light beam **231** can travel through the second dichroic mirror **520** to the light coupling device **710**. Therefore, through the arrangement of the second dichroic mirror **520**, the positional relationship between the first light source **210** and the third light source **230** will become more flexible. The mirror array **810** comprises a plurality of mirrors **811**, and the second light source **220** comprises a plurality of secondary light sources for emitting a plurality of secondary light beams (not shown) respectively. One part of the secondary light beams travels through the gaps between the mirrors **811** to the light coupling device **710**, and the other part of the secondary light beams is reflected by the mirrors **811** to the light coupling device **710**. Therefore, through the arrangement of the mirror array **810**, the second light beams **221** can be sufficiently provided to the wavelength transformer **410** to be transformed into sufficient third light beams **222** that travel into the light homogenizing device **820**.

In the illumination system **100** according to an embodiment of the present invention, both the first light source **210** and the second light source **220** are comprised of a plurality of blue laser light sources, and both the first light beam **211** and the second light beam **221** are comprised of a plurality of blue light beams. The third light source **230** is a red laser light source, while the fourth light beam **231** is a red light beam. The wavelength transformer **410** may be a yellow or green phosphor, and correspondingly, the third light beam **222** is a yellow or green light beam. Meanwhile, the optical device **310** may comprise a first lens **330** and a second lens **340** disposed along the main optical axis **320**. Opposite to the wavelength transformer **410** at the second focal point **620**, a light homogenizing device **820** is disposed at the first focal point **610** to receive the first light beam **211**, the third light beam **222** and the fourth light beam **231**, which are projected outwards after being combined. The light homogenizing device **820** is preferably an integration rod or a light tunnel.

According to the above descriptions, the illumination system **100** according to an embodiment of the present invention utilizes solid light sources with both a high luminance and a long service life and operates in the following way:

(1) the first light beam **211** (a blue light beam) emitted by the first light source **210** (a plurality of blue laser light sources) sequentially travels through the second dichroic mirror **520**, the light coupling device **710**, the first dichroic mirror **510** and the optical device **310**, and is finally focused onto the light homogenizing device **820** disposed at the first focal point **610**;

(2) the second light beam **221** (a blue light beam) emitted by the second light source **220** (a plurality of blue laser light sources) sequentially travels through the mirror array **810**, the combing device **710**, the first dichroic mirror **510** and the optical device **310**, and is then focused onto the wavelength transformer **410** (a yellow or green phosphor) disposed at the second focal point **620** to form the third light beam **222** (a yellow or green light beam); and then, the third light beam **222** is emitted from the wavelength transformer **410** to pass through the optical device **310**, and is reflected by the first

dichroic mirror **510** back to the optical device **310** to be focused onto the light homogenizing device **820** disposed at the first focal point **610**; and

(3) the fourth light beam **231** (a red light beam) emitted by the third light source **230** (a red laser light source) sequentially travels through the second dichroic mirror **520**, the light coupling device **710**, the first dichroic mirror **510** and the optical device **310**, and is focused onto the light homogenizing device **820** disposed at the first focal point **610**.

Therefore, by means of the optical components (e.g., the optical device **310**, the light coupling device **710** and the like) disposed within the illumination system **100**, the first light beam **211** (the blue light beam), the third light beam **222** (the yellow light beam or the green light beam) and the fourth light beam **231** (the red light beam) are all focused to the first focal point **610** and then combined into a homogenized white light beam by the uniform device **820** for projection outwards. This reduces the number of the optical components to be used and the volume of the illumination system and improves the light combining efficiency of the illumination system **100**.

The above disclosure is related to the detailed technical contents and inventive features thereof. People skilled in this field may proceed with a variety of modifications and replacements based on the disclosures and suggestions of the invention as described without departing from the characteristics thereof. Nevertheless, although such modifications and replacements are not fully disclosed in the above descriptions, they have substantially been covered in the following claims as appended.

What is claimed is:

1. An illumination system for use in a projection device, comprising:

a first light source for emitting a first light beam;

a second light source for emitting a second light beam;

an optical device defining a main optical axis and focusing the first light beam and the second light beam on a first focal point and a second focal point respectively, wherein the first focal point and the second focal point are disposed on two opposite sides of the main optical axis respectively;

a wavelength transformer disposed at the second focal point and transforming the second light beam into a third light beam; and

a first dichroic mirror disposed between the first light source, the second light source and the optical device, wherein the first light beam and the second light beam are allowed to travel through the first dichroic mirror, and the third light beam is reflected by the first dichroic mirror;

wherein the third light beam is emitted from the second focal point, sequentially through the optical device, and is then reflected to the optical device by the first dichroic mirror to be focused on the first focal point.

2. The illumination system as claimed in claim **1**, further comprising a light coupling device disposed between the first light source, the second light source and the first dichroic mirror and utilized for combining and guiding the first light beam and the second light beam to the optical device.

3. The illumination system as claimed in claim **2**, further comprising a third light source for emitting a fourth light beam, wherein the fourth light beam is emitted to the light coupling device, passes through the first dichroic mirror, and is focused on the first focal point by the optical device; and

a first dichroic mirror disposed between the light sources and the optical device, wherein the first light beam, the second light beam and the fourth light beam are allowed to travel through the first dichroic mirror, and the third light beam is reflected by the first dichroic mirror.

4. The illumination system as claimed in claim **3**, wherein the light coupling device comprises a first prism and a second prism.

5. The illumination system as claimed in claim **4**, wherein the first light beam and the fourth light beam are totally reflected to the optical device by the first prism and is focused on the first focal point, and the second light beam sequentially travels through the second prism, the first prism and the optical device, and is focused on the wavelength transformer disposed at the second focal point.

6. The illumination system as claimed in claim **4**, wherein the first light beam and the fourth light beam sequentially travel through the second prism, the first prism and the optical device and is focused on the first focal point, and the second light beam is totally reflected to the optical device by the first prism and is focused on the wavelength transformer disposed at the second focal point.

7. The illumination system as claimed in claim **4**, wherein the first prism and the second prism are two prism arrays.

8. The illumination system as claimed in claim **3**, wherein the illumination system further comprises a second dichroic mirror, the first light beam is reflected to the light coupling device by the second dichroic mirror, and the fourth light beam travels through the second dichroic mirror to the light coupling device.

9. The illumination system as claimed in claim **3**, wherein the illumination system further comprises a mirror array with a plurality of mirrors, the second light source comprises a plurality of secondary light sources for emitting a plurality of secondary light beams, one part of the secondary light beams travel through the mirrors to the light coupling device, and the other secondary light beams are reflected to the light coupling device by the mirrors.

10. The illumination system as claimed in claim **1**, wherein the first light beam and the second light beam are a plurality of blue light beams.

11. The illumination system as claimed in claim **10**, wherein the wavelength transformer is a yellow phosphor or a green phosphor, and correspondingly, the third light beam is a yellow light beam or a green light beam.

12. The illumination system as claimed in claim **11**, wherein the first light source and the second light source are a plurality of blue laser light sources.

13. The illumination system as claimed in claim **3**, wherein the fourth light beam is a red light beam.

14. The illumination system as claimed in claim **13**, wherein the third light source is a red laser light source.

15. The illumination system as claimed in claim **1**, wherein the optical device comprises a first lens and a second lens disposed along the main optical axis.

16. The illumination system as claimed in claim **1**, wherein the illumination system further comprises a light homogenizing device disposed at the first focal point.

17. The illumination system as claimed in claim **16**, wherein the light homogenizing device is an integration rod or a light tunnel.

18. The illumination system as claimed in claim **1**, wherein the first focal point and the second focal point are conjugate with each other.

19. The illumination system as claimed in claim **18**, wherein an included angle defined by the first focal point and the main optical axis is equal to an included angle defined by the second focal point and the main optical axis.

* * * * *