Exhibit 943-02
Invalidity of the ’943 Patent by Schultz

The asserted claims of U.S. Patent No. 10,985,943 are anticipated and/or rendered obvious in view of U.S. Patent No. 6,429,682 to Schultz et al. (“Schultz”) alone or in combination with the knowledge of one of skill in the art or other prior art.

This claim chart is based on Defendants’ present understanding of the asserted claims, Plaintiffs’ vague and overbroad infringement contentions (and corresponding, implicit claim constructions), and Defendants’ investigation to date. Defendants are not adopting Plaintiffs’ apparent constructions, nor are Defendants admitting to the correctness of any particular construction. Defendants reserve all rights to amend this invalidity claim chart in light of any claim construction developments or any amendments to Plaintiffs’ infringement contentions. Further, as discovery is ongoing and Defendants continue to seek discovery from third parties regarding the references identified in Defendants’ invalidity contentions as well as other potential prior art, Defendants reserve the right to amend or supplement this claim chart in connection with Defendants’ continuing investigation. At a minimum, Defendants intend to revise its invalidity contentions as appropriate based on discovery from third parties as discovery progresses.

The claim chart below identifies where each limitation of each asserted claim of the ’943 patent can be found in Schultz, bearing the Bates Label: PA026180-PA026207. The citations provided below are exemplary, rather than exhaustive, and Defendants reserve the right to rely upon any other portion of the cited references.

Claim Language	Exemplary Evidence of Anticipation and/or Obviousness
[1pre] A programmable device for flow processing in a user-configurable server with swappable pods or cards, comprising:	To the extent the preamble is limiting, Schultz teaches a programmable device for flow processing in a user-configurable server with swappable pods or cards. For example, Schultz teaches reconfigurable PLDs that are commonly placed on cards in servers. These teachings are shown in at least the following exemplary citations. *See, e.g.:* Schultz, Abstract: A bus interface circuit for a programmable logic device (PLD) including an interface multiplexer connected between two or more external communication circuits and a configuration memory array. The interface multiplexer coordinates communication between a selected one of the external communication circuits and a packet processor. The packet processor interprets command/data information transmitted in a bit stream from the selected external communication circuit. In a default state, the interface multiplexer connects dual-purpose input/output pins of the PLD to the packet processor. In an alternative state, the

IPR2025-00486
Concurrent Ventures LLC, XtreamEdge Inc. EX2046

Claim Language	Exemplary Evidence of Anticipation and/or Obviousness
	interface multiplexer connects a JTAG interface circuit to the packet processor to facilitate configuration operations through the JTAG pins of the PLD.
[1a] a programmable logic device (PLD) having a first region and a second region;	Schultz teaches a programmable logic device having a first region and a second region. For example, Schultz teaches PLDs having a region with a configuration plane and external communication circuits, and a region for configurable logic blocks (CLBs). These teachings are shown in at least the following exemplary citations. *See, e.g.:*Schultz, Abstract: A bus interface circuit for a programmable logic device (PLD) including an interface multiplexer connected between two or more external communication circuits and a configuration memory array. The interface multiplexer coordinates communication between a selected one of the external communication circuits and a packet processor. The packet processor interprets command/data information transmitted in a bit stream from the selected external communication circuit. In a default state, the interface multiplexer connects dual-purpose input/output pins of the PLD to the packet processor. In an alternative state, the interface multiplexer connects a JTAG interface circuit to the packet processor to facilitate configuration operations through the JTAG pins of the PLD. Schultz, 3:30-42: The present invention is utilized in a PLD that includes configurable logic blocks (CLBs) connected by configurable interconnect resources, and a configuration circuit that includes memory cells coupled to the configurable logic blocks and the configurable interconnect resources. The PLD also includes one or more external communication circuits for transmitting a configuration bit stream between external devices and the memory cells. Configuration data in the bit stream is transmitted to the memory cells of the configuration memory circuit during a configuration operation. During subsequent normal operation of the PLD, the configuration data stored in the memory cells determines the logic function performed by the CLBs.

Claim Language	Exemplary Evidence of Anticipation and/or Obviousness
	Plaintiffs originally proposed a construction of PLD as “a device with electronic circuitry capable of being configured or reconfigured.” In their infringement contentions, Plaintiffs alleged this is satisfied by processors running software. Ex. D 943 Claim Chart to Plaintiffs’ First Amended Infringement Contentions at 18-26. Defendants do not agree with Plaintiffs’ interpretation and Defendants reserve the right to address Plaintiffs’ construction. Nonetheless, Schultz teaches Plaintiffs’ original construction by teaching, e.g., PLDs (e.g., FPGAs) with programmable logic that is capable of being configured or reconfigured. Plaintiffs subsequently retracted this construction in their claim construction briefing in the Western District of Texas and argued that “PLD” should be afforded its plain and ordinary meaning. Plaintiffs’ Responsive Claim Construction Brief in WDTX at 23 n.11. To the extent Plaintiffs attempt to introduce a new construction for PLD, Defendants reserve their right to supplement these disclosures. Defendants’ position is that programmable logic device in the context of the ’943 patent means “an integrated circuit where the user can alter the connection pattern of the circuits” consistent with the conventional use of the term in the art. During prosecution of the ’943 patent, the Applicant explained that this is a term of art referring to “a specific type of integrated circuit that has user programmable electronic circuits.” Schultz satisfies this construction, for example, with a PLD (such as an FPGA), which is a specific type of integrated circuit that has user programmable electronic circuits, where the user can alter the connection pattern of the circuits in the programmable fabric, as explained above.
[1b] the first region comprising a hardware-based or firmware based router with a port enabling communication between the router and the second region;	Schultz teaches a first region comprising a hardware-based or firmware based router with a port enabling communication between the router and the second region. For example, Schultz teaches the first region includes one or more external communication circuits for transmitting a configuration bit stream between external devices and the memory cells. These teachings are shown in at least the following exemplary citations. *See, e.g.:* Schultz, 3:30-42:

Claim Language	Exemplary Evidence of Anticipation and/or Obviousness
	The present invention is utilized in a PLD that includes configurable logic blocks (CLBs) connected by configurable interconnect resources, and a configuration circuit that includes memory cells coupled to the configurable logic blocks and the configurable interconnect resources. The PLD also includes one or more external communication circuits for transmitting a configuration bit stream between external devices and the memory cells. Configuration data in the bit stream is transmitted to the memory cells of the configuration memory circuit during a configuration operation. During subsequent normal operation of the PLD, the configuration data stored in the memory cells determines the logic function performed by the CLBs. Schultz, 4:43-65: Configuration plane 120 generally includes a configuration circuit 122 and configuration memory array 125. Configuration circuit 122 includes several input and/or output terminals that are connected to dedicated configuration pins 127 and to dual-purpose input/output (I/O) pins 128. Configuration memory array 125 includes memory cells 126-1 and 126-2 that are arranged in “frames” (i.e., columns of memory cells extending the length of FPGA 100), and addressing circuitry (not shown) for accessing each frame. JTAG (Boundary Scan) circuitry 130 is included in configuration plane 120, and is also connected to at least one terminal of configuration circuit 122. JTAG circuit 130 includes the four well-known JTAG terminals 133 (i.e., TDI, TDO, TMS, and TCK). During configuration of FPGA 100, configuration control signals are transmitted from dedicated configuration pins 127 to configuration circuit 122. In addition, a configuration bit stream is transmitted from either the TDI terminal of JTAG circuit 130, or from dual-purpose I/O pins 128 to configuration circuit 122. During a configuration operation, circuit 122 routes configuration data from the bit stream to memory array 125 to establish an operating state of FPGA 100. Circuit 122 is described in additional detail below. In a related proceeding before the Patent Trial and Appeal Board, Plaintiffs have proposed a construction of hardware-based router as “a router that lacks a processor.” IPR2025-00223, Paper

Claim Language	Exemplary Evidence of Anticipation and/or Obviousness
	24 (POR) at 16. Defendants do not believe claim construction is needed for this term and reserve the right to address Plaintiffs’ construction. Nonetheless, Schultz satisfies Plaintiffs’ construction, e.g., with the configuration plane comprising router functionality implemented in the programmable electronic circuits of an FPGA, as explained above.
[1c] and the second region comprising one or more sandboxes with user-definable programmable electronic circuits of the PLD,	Schultz teaches the second region comprising one or more sandboxes with user-definable programmable electronic circuits of the PLD. For example, Schultz teaches configurable logic blocks (CLBs) of a PLD. These teachings are shown in at least the following exemplary citations. *See, e.g.:* Schultz, 3:30-42: > The present invention is utilized in a PLD that includes configurable logic blocks (CLBs) connected by configurable interconnect resources, and a configuration circuit that includes memory cells coupled to the configurable logic blocks and the configurable interconnect resources. The PLD also includes one or more external communication circuits for transmitting a configuration bit stream between external devices and the memory cells. Configuration data in the bit stream is transmitted to the memory cells of the configuration memory circuit during a configuration operation. During subsequent normal operation of the PLD, the configuration data stored in the memory cells determines the logic function performed by the CLBs.
[1d] wherein the port comprises: a bridge being lockable to prevent user access, and unlockable to enable user access, to each of	Schultz teaches that the port comprises a bridge being lockable to prevent user access, and unlockable to enable user access, to each of the sandboxes and the user-definable programmable electronic circuits therein. For example, Schultz teaches a configuration circuit that locks/unlocks a bridge by applying a frame mask to prevent or enable selective access to individual groups of logic

Claim Language	Exemplary Evidence of Anticipation and/or Obviousness
the sandboxes and the user-definable programmable electronic circuits therein.	blocks and the user-definable programmable electronics circuits. These teachings are shown in at least the following exemplary citations. *See, e.g.:* Schultz, 3:24-30: In accordance with another aspect of the present invention, a frame mask register is provided in the configuration memory that controls which memory cells of each frame (column) are written during a configuration operation, thereby allowing selective access to individual groups of configuration data stored in the memory array. Schultz, 4:43-65: Configuration plane 120 generally includes a configuration circuit 122 and configuration memory array 125. Configuration circuit 122 includes several input and/or output terminals that are connected to dedicated configuration pins 127 and to dual-purpose input/output (I/O) pins 128. Configuration memory array 125 includes memory cells 126-1 and 126-2 that are arranged in “frames” (i.e., columns of memory cells extending the length of FPGA 100), and addressing circuitry (not shown) for accessing each frame. JTAG (Boundary Scan) circuitry 130 is included in configuration plane 120, and is also connected to at least one terminal of configuration circuit 122. JTAG circuit 130 includes the four well-known JTAG terminals 133 (i.e., TDI, TDO, TMS, and TCK). During configuration of FPGA 100, configuration control signals are transmitted from dedicated configuration pins 127 to configuration circuit 122. In addition, a configuration bit stream is transmitted from either the TDI terminal of JTAG circuit 130, or from dual-purpose I/O pins 128 to configuration circuit 122. During a configuration operation, circuit 122 routes configuration data from the bit stream to memory array 125 to establish an operating state of FPGA 100. Circuit 122 is described in additional detail below. Schultz, Figure 2A:

Claim Language	Exemplary Evidence of Anticipation and/or Obviousness
	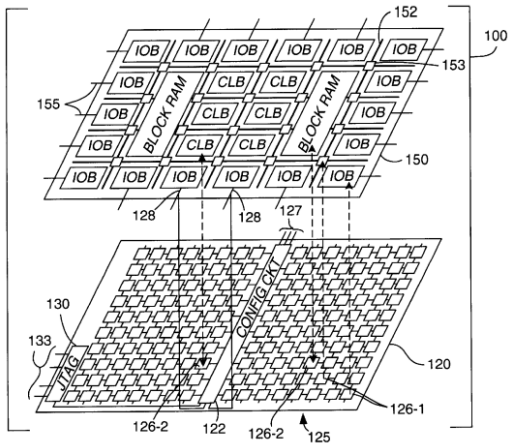 FIG. 2A Schultz, 7:56-8:16: FIG. 4 is a block diagram showing a configuration circuit 122 that includes a configuration bus structure according to an embodiment of the present invention. Configuration circuit 122 includes a collection of 32-bit registers (referred to herein as the configuration registers) for accessing and controlling the configuration logic of configuration plane 120. These configuration registers are accessed through JTAG circuit 130 and/or a general interface circuit 402 that are respectively connected to a bus interface circuit 410. Bus interface circuit 410 is connected between general interface circuit 402 and a common 32-line parallel bus 415. The configuration registers are also connected to bus 415 and include a command register 420, a global control register 425, a mask register 427, a configuration options register 430, a cyclic redundancy check (CRC) register 435, a status register 437, a frame length register 440, a frame address register 445, a frame data register (FDR) 450, a multiple frame write register 460, and a daisy out register 465. In one embodiment, FDR 450 includes both a frame data input register 452 and a frame data output register 457. A configuration state machine 470 is provided to coordinate the configuration registers and

Claim Language	Exemplary Evidence of Anticipation and/or Obviousness
	memory array 125 during the configuration and readback operations. Communication between the interface circuits, configuration registers, configuration state machine 470, and memory array 125 is carried out over a conductive network 475. Details and functions of configuration circuit 122 are described in the following paragraphs. Schultz, Figure 4: 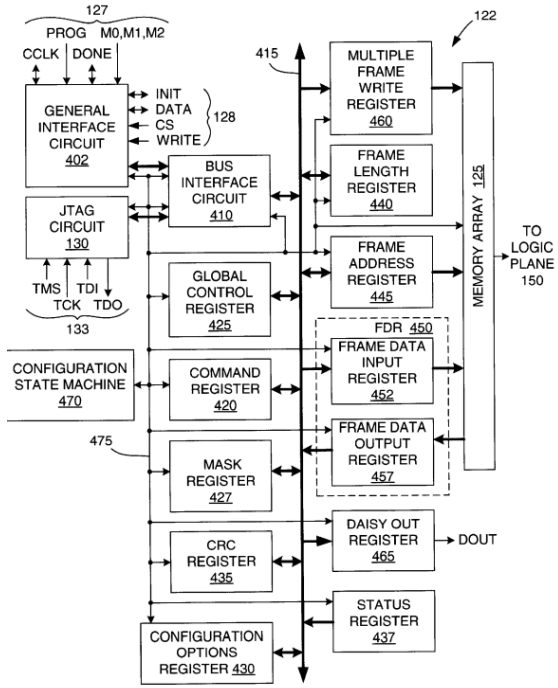 FIG. 4 Schultz, 12:5-16:

Claim Language	Exemplary Evidence of Anticipation and/or Obviousness
	A security control option selectively restricts access to configuration and read operations. If the persist control option (discussed above) is not utilized, then dual-access pins 128 are not available after configuration; however, the Boundary Scan pins 133 are always active and have access to configuration plane 120. To prevent unauthorized access of configuration plane 120 through these pins (or through dual-access pins 128 when the persist control option is selected), security control option data is stored in global control register 425 that controls state machine 470 to selectively disable all read functions from dual-access pins 128 and/or Boundary Scan pins 133. Schultz, 18:37-56: Optional multiplexing circuit 725 operates in cooperation with frame mask register 770 to prevent undesirable data signal transmissions from shift register 720 to configuration memory 740. Frame mask register 770 stores authorization data that is used to control two-to-one multiplexers of multiplexing circuit 725 in a manner similar to that used by mask register 427 (described above). In one embodiment, frame mask register 770 generates one authorization signal for every flip-flop of shadow register 730, and authorization data is shifted into frame mask register 770 from bus 415. In another embodiment (not shown), each authorization signal generated by frame mask register 770 controls a selected group of memory cells of shadow register 730, and authorization data is either received from bus 415 or from frame address register/counter 445. The default setting of frame mask register 770 that is used, for example, during full configuration of configuration memory 740, is to pass all data signals from shift register 720 to shadow register 730. Unless specifically stated otherwise, this default setting is presumed in the following description.
2. The programmable device of claim 1, further comprising: the router communicative to translate between a first	Schultz teaches the router communicative to translate between a first protocol and a second protocol, for messaging with system resources. For example, Schultz teaches the first region

Claim Language	Exemplary Evidence of Anticipation and/or Obviousness
protocol and a second protocol, for messaging with system resources.	includes one or more external communication circuits for transmitting a configuration bit stream between external devices and the memory cells. *See, e.g.*, disclosures for limitation 1[b].
3. The programmable device of claim 1, wherein each of the sandboxes comprises user-programmable one or more of: analog circuitry, digital circuitry, memory, processors or controllers.	Schultz teaches each of the sandboxes comprises user-programmable one or more of: analog circuitry, digital circuitry, memory, processors or controllers. For example, Schultz teaches configurable logic blocks (CLBs) comprising user-programmable digital circuitry of the FPGA. *See, e.g.*, disclosures for limitation 1[b].
4. The programmable device of claim 1, wherein the port comprises: a bridge being lockable to prevent reconfiguration of the bridge and prevent reconfiguration of the router while enabling reconfiguration of the one or more sandboxes.	Schultz teaches the port comprises a bridge being lockable to prevent reconfiguration of the bridge and prevent reconfiguration of the router while enabling reconfiguration of the one or more sandboxes. For example, Schultz teaches a configuration circuit that applies a frame mask for selective access to individual groups. *See, e.g.*, disclosures for limitation 1[d].
5. The programmable device of claim 1, wherein the port comprises: a bridge having a security layer to authenticate a user or verify a permission, to	Schultz teaches the port comprises a bridge having a security layer to authenticate a user or verify a permission, to reconfigure one or more of the one or more sandboxes. For example, Schultz teaches a configuration circuit with a security layer to authenticate a user or verify a permission to allow

Claim Language	Exemplary Evidence of Anticipation and/or Obviousness
reconfigure one or more of the one or more sandboxes.	access to individual groups of logic blocks for reconfiguration. *See, e.g.*, disclosures for limitation 1[d].
6. The programmable device of claim 1, further comprising: the router configured to perform analytics on resources of the programmable device, on a per module basis, including determining communication bandwidth and resource utilization.	
7. The programmable device of claim 1, wherein the one or more sandboxes each comprise port interfaces that are configurable as to data width or speed.	
8. The programmable device of claim 1, wherein the one or more sandboxes each comprise clock cycle utilization regulation for controlling power consumption or thermal characteristics.	

Claim Language	Exemplary Evidence of Anticipation and/or Obviousness
9. The programmable device of claim 1, wherein the one or more sandboxes comprises a plurality of sandboxes that are logically or physically combinable to form a larger sandbox.	
[10pre] A programmable device for data flow processing in a user-configurable server, comprising:	Schultz teaches a programmable device for data flow processing in a user-configurable server. For example, Schultz teaches reconfigurable PLDs commonly placed on cards in servers. *See, e.g.*, disclosures for limitation 1[pre].
[10a] a programmable logic device (PLD) having a first region and a second region;	Schultz teaches a programmable logic device (PLD) having a first region and a second region. For example, Schultz teaches PLDs having a region with a configuration circuit and external communication circuits, and a region for configurable logic blocks (CLBs). *See, e.g.*, disclosures for limitation [1a]. Plaintiffs originally proposed a construction of PLD as “a device with electronic circuitry capable of being configured or reconfigured.” In their infringement contentions, Plaintiffs alleged this is satisfied by processors running software. Ex. D 943 Claim Chart to Plaintiffs’ First Amended Infringement Contentions at 18-26. Defendants do not agree with Plaintiffs’ interpretation and Defendants reserve the right to address Plaintiffs’ construction. Nonetheless, Schultz teaches Plaintiffs’ original construction by teaching, e.g., PLDs (e.g., FPGAs) with programmable logic that is capable of being configured or reconfigured. Plaintiffs subsequently retracted this construction in their claim construction briefing in the Western District of Texas and argued that “PLD” should be afforded its plain and ordinary meaning. Plaintiffs’ Responsive Claim Construction Brief in WDTX at 23 n.11. To the extent Plaintiffs attempt to introduce a new construction for PLD, Defendants reserve their right to supplement these

Claim Language	Exemplary Evidence of Anticipation and/or Obviousness
	disclosures. Defendants’ position is that programmable logic device in the context of the ’943 patent means “an integrated circuit where the user can alter the connection pattern of the circuits” consistent with the conventional use of the term in the art. During prosecution of the ’943 patent, the Applicant explained that this is a term of art referring to “a specific type of integrated circuit that has user programmable electronic circuits.” Schultz satisfies this construction, for example, with a PLD (such as an FPGA), which is a specific type of integrated circuit that has user programmable electronic circuits, where the user can alter the connection pattern of the circuits in the programmable fabric, as explained above.
[10b] the first region comprising a hardware-based or firmware-based router having a bridge with a port enabling communication between the router and the second region;	Schultz teaches the first region comprising a hardware-based or firmware-based router having a bridge with a port enabling communication between the router and the second region. For example, Schultz teaches the first region includes one or more external communication circuits for transmitting a configuration bit stream between external devices and the memory cells. *See, e.g.*, disclosures for limitation [1b]. In a related proceeding before the Patent Trial and Appeal Board, Plaintiffs have proposed a construction of hardware-based router as “a router that lacks a processor.” IPR2025-00223, Paper 24 (POR) at 16. Defendants do not believe claim construction is needed for this term and reserve the right to address Plaintiffs’ construction. Nonetheless, Schultz satisfies Plaintiffs’ construction, e.g., with the configuration plane comprising router functionality implemented in the programmable electronic circuits of an FPGA, as explained above.
[10c] the second region comprising a plurality of sandboxes with user-definable programmable electronic circuits of the PLD;	Schultz teaches the second region comprising a plurality of sandboxes with user-definable programmable electronic circuits of the PLD. For example, Schultz teaches configurable logic blocks (CLBs) of a PLD. *See, e.g.*, disclosures for limitation [1c].

Claim Language	Exemplary Evidence of Anticipation and/or Obviousness
[10d] an internal communication network in the PLD, coupling the port of the bridge of the router and the one or more sandboxes for the data flow processing,	Schultz teaches an internal communication network in the PLD, coupling the port of the bridge of the router and the one or more sandboxes for the data flow processing. For example, Schultz teaches a conductive network coupling the configuration and logic planes. These teachings are shown in at least the following exemplary citations. *See, e.g.:* *See, e.g.*, disclosures for limitation [1b]. Schultz, 7:56-8:16: FIG. 4 is a block diagram showing a configuration circuit 122 that includes a configuration bus structure according to an embodiment of the present invention. Configuration circuit 122 includes a collection of 32-bit registers (referred to herein as the configuration registers) for accessing and controlling the configuration logic of configuration plane 120. These configuration registers are accessed through JTAG circuit 130 and/or a general interface circuit 402 that are respectively connected to a bus interface circuit 410. Bus interface circuit 410 is connected between general interface circuit 402 and a common 32-line parallel bus 415. The configuration registers are also connected to bus 415 and include a command register 420, a global control register 425, a mask register 427, a configuration options register 430, a cyclic redundancy check (CRC) register 435, a status register 437, a frame length register 440, a frame address register 445, a frame data register (FDR) 450, a multiple frame write register 460, and a daisy out register 465. In one embodiment, FDR 450 includes both a frame data input register 452 and a frame data output register 457. A configuration state machine 470 is provided to coordinate the configuration registers and memory array 125 during the configuration and readback operations. Communication between the interface circuits, configuration registers, configuration state machine 470, and memory array 125 is carried out over a conductive network 475. Details and functions of configuration circuit 122 are described in the following paragraphs.
[10e] wherein the bridge is lockable to prevent user access, and unlockable to	Schultz teaches wherein the bridge is lockable to prevent user access, and unlockable to enable user access, to the plurality of sandboxes and user-definable programmable electronic circuits therein. For example, Schultz teaches a configuration circuit that locks/unlocks a bridge by applying a frame

Claim Language	Exemplary Evidence of Anticipation and/or Obviousness
enable user access, to the plurality of sandboxes and user-definable programmable electronic circuits therein.	mask to prevent or enable selective access to individual groups of logic blocks and the user-definable programmable electronics circuits. *See, e.g.*, disclosures for limitation [1d].
11. The programmable device of claim 10, further comprising: the router to translate between a first protocol used external to the second region and a second protocol used in the internal communication network in the PLD.	Schultz teaches the router to translate between a first protocol used external to the second region and a second protocol used in the internal communication network in the PLD. For example, Schultz teaches the first region includes one or more external communication circuits for transmitting a configuration bit stream between external devices and the memory cells. *See, e.g.*, disclosures for claim 2.
12. The programmable device of claim 10, wherein each of the plurality of sandboxes comprises user-programmable one or more of: analog circuitry, digital circuitry, memory, processors or controllers.	Schultz teaches each of the plurality of sandboxes comprises user-programmable one or more of: analog circuitry, digital circuitry, memory, processors or controllers. For example, Schultz teaches configurable logic blocks (CLBs) comprising user-programmable digital circuitry of the FPGA. *See, e.g.*, disclosures for claim 3.
13. The programmable device of claim 10, wherein the bridge is lockable to enable reconfiguration of the plurality of sandboxes, prevent	Schultz teaches the bridge is lockable to enable reconfiguration of the plurality of sandboxes, prevent reconfiguration of the bridge and prevent reconfiguration of the router. For example, Schultz teaches a configuration circuit that applies a frame mask for selective access to individual groups. *See, e.g.,* disclosures for claim 4.

Claim Language	Exemplary Evidence of Anticipation and/or Obviousness
reconfiguration of the bridge and prevent reconfiguration of the router.	
14. The programmable device of claim 10, wherein the bridge has a security layer to authenticate a user or verify a permission, to reconfigure one or more of the plurality of sandboxes.	Schultz teaches the bridge has a security layer to authenticate a user or verify a permission, to reconfigure one or more of the plurality of sandboxes. For example, Schultz teaches a configuration circuit with a security layer to authenticate a user or verify a permission to allow access to individual groups of logic blocks for reconfiguration. *See, e.g.*, disclosures for claim 5.
15. The programmable device of claim 10, further comprising: the router configured to perform analytics on resources of the programmable device, on a per module basis, including determining communication bandwidth and resource utilization in the plurality of sandboxes.	
16. The programmable device of claim 10, wherein the each of the plurality of sandboxes comprises one or more port	

Claim Language	Exemplary Evidence of Anticipation and/or Obviousness
interfaces configurable as to data width or speed.	
17. The programmable device of claim 10, wherein each of the plurality of more sandboxes comprises clock cycle utilization regulation for controlling power consumption or thermal characteristics.	
18. The programmable device of claim 10, wherein the plurality of sandboxes is logically or physically combinable to form a single, larger sandbox.	