64. As will be demonstrated in the charts below, at least claims 1-10, 12, 14-16, and 18 of the ’926 patent are rendered obvious by Lindahl in view Yamamoto and in further view of HJ Zottel. I have not been asked to review additional claims as to their validity in light of this combination. However, should I be asked to do so, I will perform a validity analysis on all the claims of the ’926 patent. For reference these three pieces of prior art are shown below:

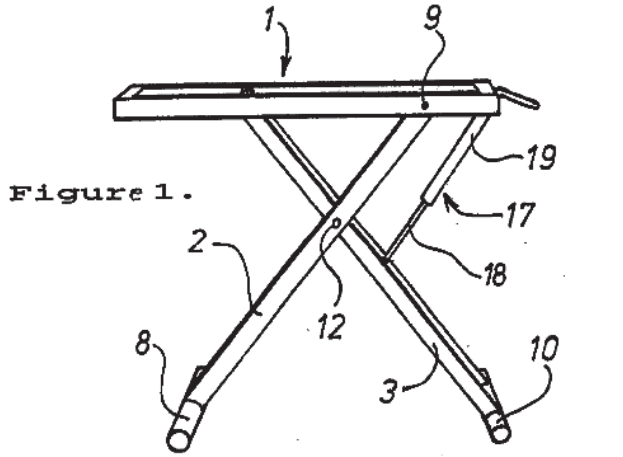	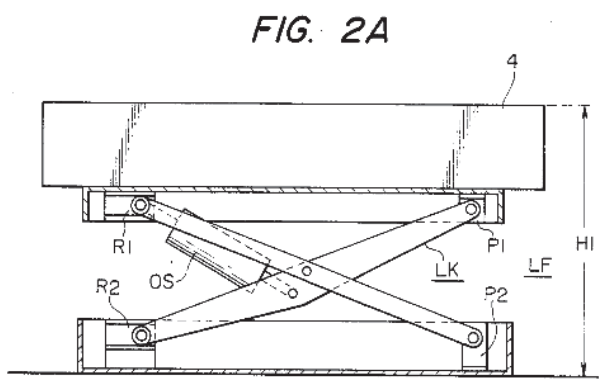	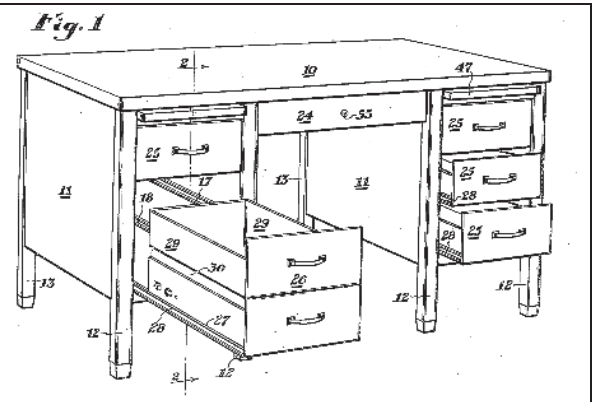
WO 9117906 to Lindahl November 28, 1991	US 4,574,785 to Yamamoto March 11, 1986	US 2,225,243 to HJ Zottel June 3, 1938

65. I note that despite each of these references being publicly available, NONE of them were disclosed to the examiner during the prosecution of the ’926 patent. A POSITA would be motivated to combine these references in accordance with the teachings therein. For example, Lindahl and Yamamoto are both vertically adjustable platforms that use a scissor linkage and piston-cylinder style actuator. They are highly compatible with each other, but Yamamoto shows greater vertical adjustability afforded by the ability to lower to a point where the scissor links and actuator are aligned. Combining Yamamoto with Lindahl would allow for greater height adjustability as well as allowing the Lindahl table to store more compactly. When combined, the gas spring of Lindahl will also be aligned with the links as in Yamamoto leading to maximum compactness for storage.

66. A POSITA would further be motivated to combine the base of Yamamoto with the Lindahl mechanism to gain ordinary and well-known advantages. For example, were Lindahl to be used on a delicate surface, its legs would cause concentrated pressure points which could cause unrecoverable depression marks in carpet over time. A POSITA will recognize this fact and be motivated to incorporate the base as taught by Yamamoto which presents a broad base surface. This base surface more evenly distributes the pressure which significantly reduces the potential damage to the supporting floor. This principle is well-known. For example, US patent no. 5,823,492 to Anselmo (circa 1998) states the following:

"When furniture rests on a laid carpet for a period of time, it crushes the pile, the backing and the pad, forming indentations thereon. When the pile gets crushed, it generally can be brushed out to nearly its original form. However, when the backing gets bent, it will not return to its original form. Also, once a pad gets crushed over a period of time, i.e., generally a month or more, it will not come back to its original form. The bent backing and crushed pad will be visible through the carpet pile as indentations or marks marring the pile. Therefore, once furniture is placed on a laid carpet, the furniture cannot be rearranged without leaving indentation and ugly marks visible on the carpet. The only recourse is to either position other furniture over the residual indentation marks or replace the original carpet and pad. Prior art furniture caps attempt to protect carpet pile by distributing the loading caused by a particular piece of furniture over a larger area. However, prior art furniture caps merely make larger residual marks in the backing and pad."[22]

67. As shown above, the use of a broad supportive base to reduce the formation of unrecoverable indentation in surfaces such as carpets is well known. A POSITA would recognize that the legs of Lindahl would present the same wear and tear problem as any other piece of furniture on carpet. As such, a POSITA would be motivated to incorporate a base, such as disclosed by Yamamoto to help distribute these loads and prevent the table from damaging surface it is placed on. A POSITA would be further motivated to combine HJ Zottel with the combination of Lindahl in view of Yamamoto as HJ Zottel discloses a desk top with drawers underneath. This is a well-known design element that any POSITA would understand could be integrated with a scissor lift platform. A POSITA would understand that the depth of the drawers would, at most, be the width of the scissor links so that the drawers do not prevent the assembly from being fully lowered. HJ Zottel is one of many examples of this well-known design element of having drawers integral with the desk.

68. Further, when combining the teachings of HJ Zottel with the combination of Lindahl in view of Yamamoto, a POSITA would be motivated to use a top-mount drawer as that is the most convenient mount type for a desk of this sort. A bottom mounted drawer slide will not be suitable as there is no structure below to support the drawer. Further, a side mounted drawer is feasible however, doing so requires installing a top-mounted bracket which provides strucutre to support the drawer. This is functionally equivalent to a top-mounted drawer. Thus, for at least these reasons, a POSITA will be motivated to combine the teachings of HJ Zottel in the form of a top-mounted drawer in a manner as is well-known.

Challenged Claim '926	
1P. A desktop workspace that adjusts vertically, comprising:	**YES:** While the preamble is generally not considered limiting, Lindahl in view of Yamamoto discloses a desktop workspace that adjusts vertically.

[22] US 5,823,492 at 1:20-38

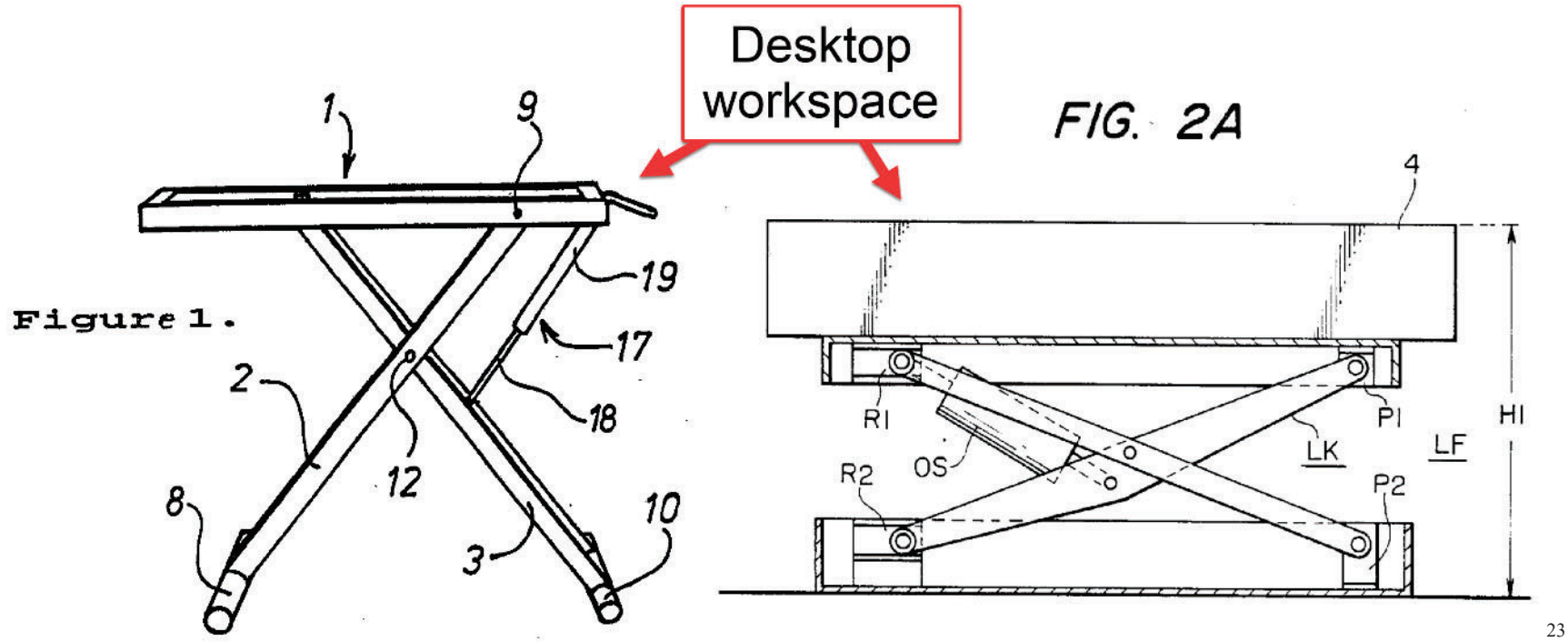

[23]

Lindahl discloses a desktop workspace that adjusts vertically:

"The present invention relates to a table stand for use preferably in caravans and motorhomes, wherein the top of the stand is provided with a frame-like part on which a tabletop is intended to be placed and which is adjustable in the height direction so that the tabletop can be adjusted vertically to different positions." Lindhal, Abstract

A POSITA will understand that scissor lift mechanisms adjust the vertical height of a platform surface such as a desktop workspace. For example, Yamamoto states:

"The conventional fluidized bed has a fixed height. However, there has been a demand for a fluidized bed having an adjustable height, specifically, one in which the height of the bed above the floor can be made as small as possible for ease in transferring a patient onto the bed or when a patient gets onto or off the bed, and placed at a suitable height when the patient is lying on the bed for administering treatment to the patient." Yamamoto 1:53-60

[23] Lindhal, Figure 1 and Yamamoto, Figure 2A, Annotated

As shown above, Yamamoto describes a vertically adjustable workspace platform (a patient support platform in this case). A POSITA would readily recognize that the Yamamoto vertical adjustment mechanism could be used for a wide variety of applications, as scissor lift mechanisms are extremely common and well-known. It is helpful to ascertain the plain and ordinary meaning and scope of "desktop workspace" considering the common dictionary definitions as shown below: Desktop: the top of a desk[24] Desk: A table, counter, or booth at which specified services or functions are performed[25] Workspace: An area used or allocated for one's work, as in an office.[26] The usage of the term desktop workspace within the '926 patent is consistent with the plain and ordinary meaning of the words from which this compound term is composed. For example, the desktop workspace in the '926 patent is described as having a top surface at which an operator stands to perform their work.[27] In just the same way, Yamamoto discloses a work surface in the form of a bed on a table at which an operator stands to perform their work. Similarly, Lindahl discloses a desk surface which is a dedicated space allocated for one's work should they so choose.	
1a. a work surface platform;	**YES:** Both Lindahl and Yamamoto disclose a work surface platform.

[24] <https://www.ahdictionary.com/word/search.html?q=desktop> accessed Dec 29, 2024
[25] <https://www.ahdictionary.com/word/search.html?q=desk> accessed Dec 29, 2024
[26] <https://www.ahdictionary.com/word/search.html?q=workspace> accessed Dec 29, 2024
[27] '926 patent 1:33-66

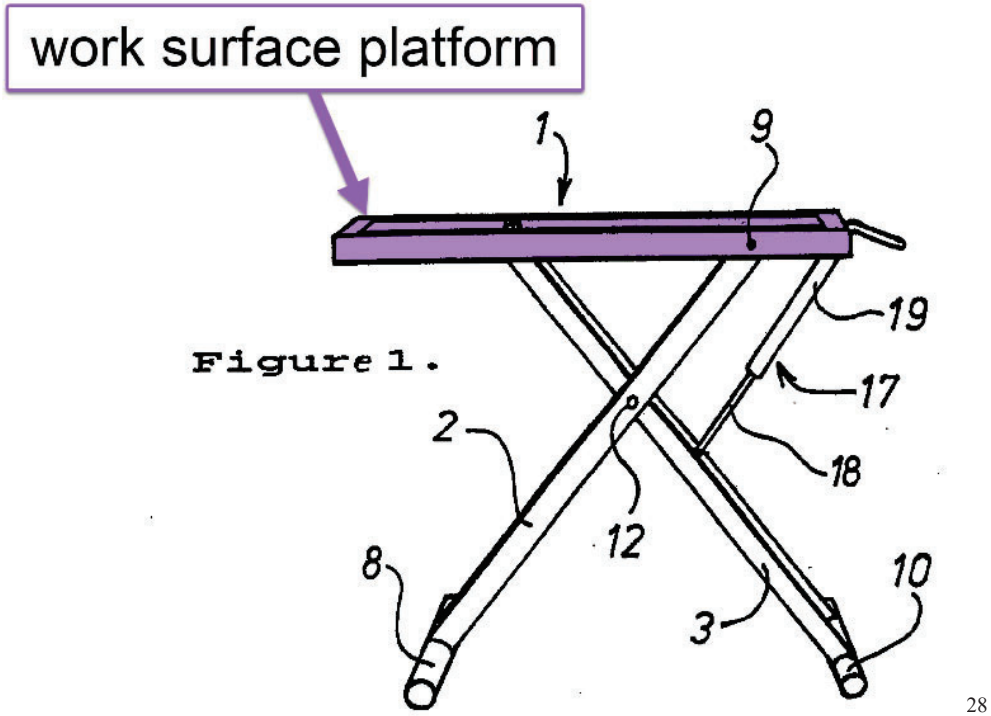

[28]

*"The present invention relates to a table stand intended for use preferably in caravans and motorhomes, wherein the stand supports at the top thereof a frame-like part on which a tabletop is intended to be placed… **Firstly the table is intended for use as a conventional dining table**…" Lindahl 1:3-6, 13-14 (emphasis added)*
"The stand includes a frame-like part 1 which is carried by two leg members 2, 3." Lindahl 3:1-3

As shown above, Lindahl describes a work surface platform that is intended to be used as a work surface platform. A POSITA will understand that a dining table is perfectly suitable for use as a work surface, and that it is common for dining tables to be used for other types of work.

Yamamoto also discloses a work surface platform as shown below:

[28] Lindahl, Figure 1, annotated

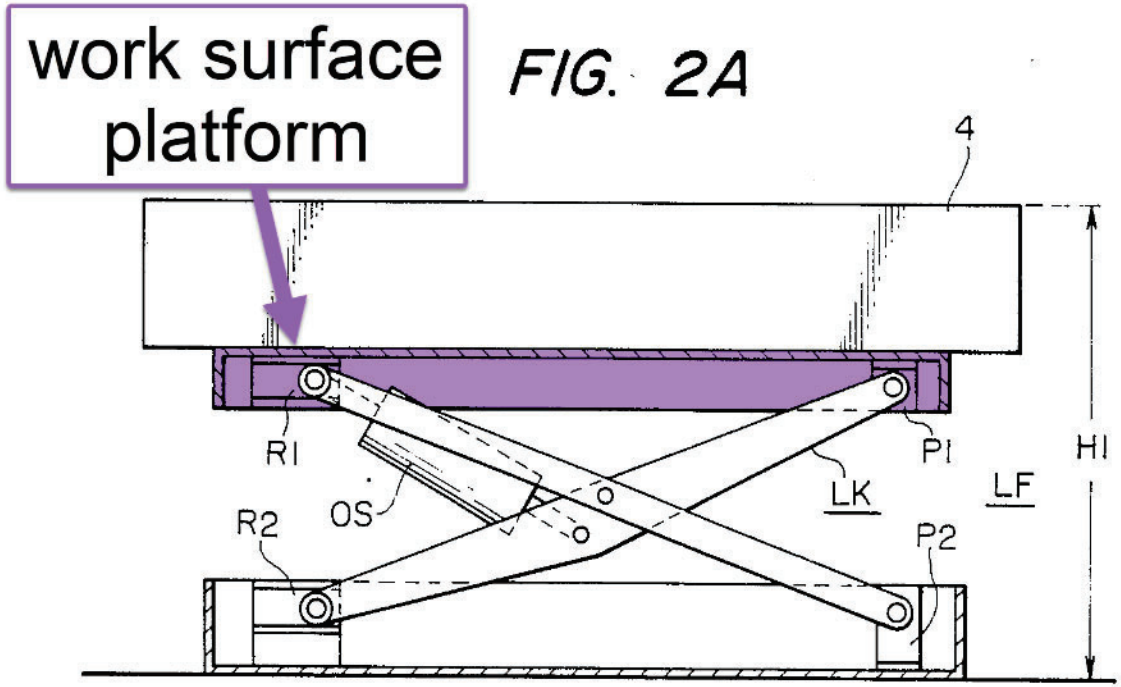

[29]

"The conventional fluidized bed has a fixed height. However, there has been a demand for a fluidized bed having an adjustable height, specifically, one in which the height of the bed above the floor can be made as small as possible for ease in transferring a patient onto the bed or when a patient gets onto or off the bed, ***<u>and placed at a suitable height when the patient is lying on the bed for administering treatment to the patient."</u>*** *Yamamoto 1:53-60 (emphasis added)*

As shown above, Yamamoto discloses a platform for supporting a patient. A POSITA will understand that this is a platform where doctors and nurses perform work on patients, which is clearly an example of a work surface platform.

1b. a slidable tray selectively positionable between a stored position under the work surface platform and an extended position that is outward and lowered with respect to the work surface platform,	**YES:** Lindahl in view of Yamamoto and in further view of HJ Zottel discloses a slidable tray selectively positionable between a stored position under the work surface platform and an extended position that is outward and lowered with respect to the work surface platform.

[29] Yamamoto Figure 2A, annotated

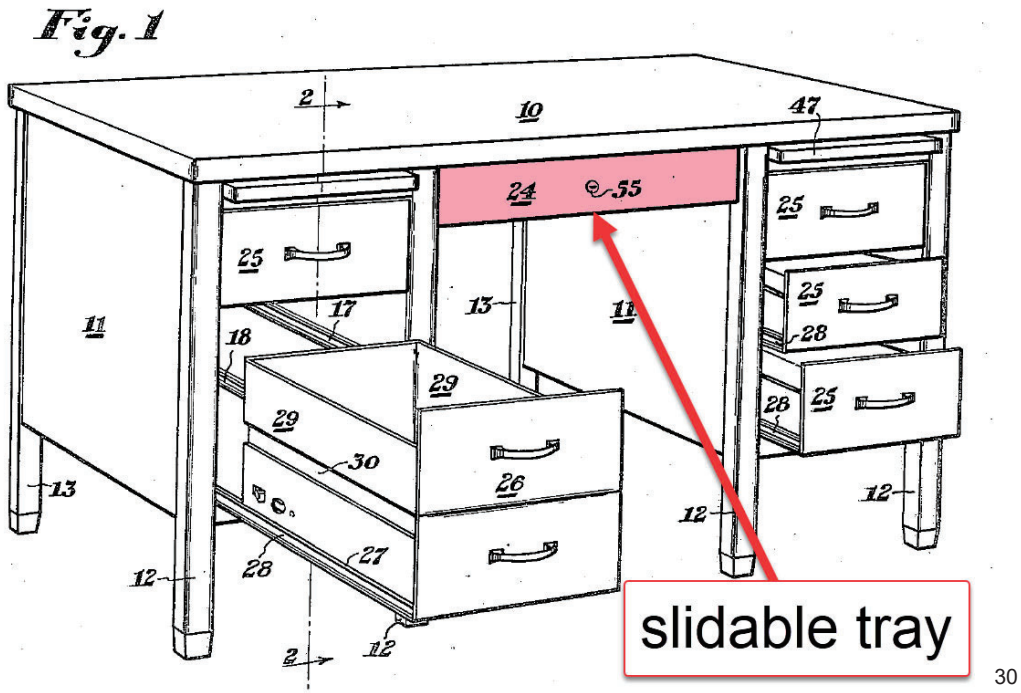

[30]

"The primary objects of the instant invention are to provide a desk having a plurality of box drawers and one or more vertical letter file drawers…" HJ Zottel 1:4-6

"The desk comprises a top 10 supported by drawer supporting pedestals 11 having front legs 12 and rear legs 13 attached thereto" HJ Zottel 1:47-50

"As best shown in Figure 1, the desk is provided with a center drawer 24 between the pedestals 11" HJ Zottel 2:9-11

As shown above, HJ Zottel discloses a slidable tray (drawer 24) which is mounted under the work surface platform (desk top 10). A POSITA will understand that drawers are a common feature that can be (and often is) added to any desk design, for instance the desktop shown in HJ Zottel. Thus, the addition of a drawer to mount under a desk top surface is not inventive in the slightest as this type of design has been well-known for well over 100 years (see for example US 1,508,259 to I.A. Stafford filed in 1919, or George Washington's desk which is over 200 years old and has drawers mounted under the desk surface[31]). Further, a POSITA will understand that drawers are commonly designed to slide into a stored

[30] HJ Zottel, Figure 1, annotated
[31] <https://emuseum.mountvernon.org/objects/414/tambour-writing-table-and-bookcase> Dec 19, 2024

position or out to an open position. For example, Figure 1 of HJ Zottel shows drawer 24 in a stored position and drawer 26 slid out into an open position. As the tray is mounted to the underside of the work surface platform, a POSITA will further understand that when open, the bottom surface of the tray (drawer 24) will be outward and lowered with respect to the work surface platform.

1c. a base configured to sit on an existing platform; and	**YES:** Lindahl in view of Yamamoto discloses a base configured to sit on an existing platform.

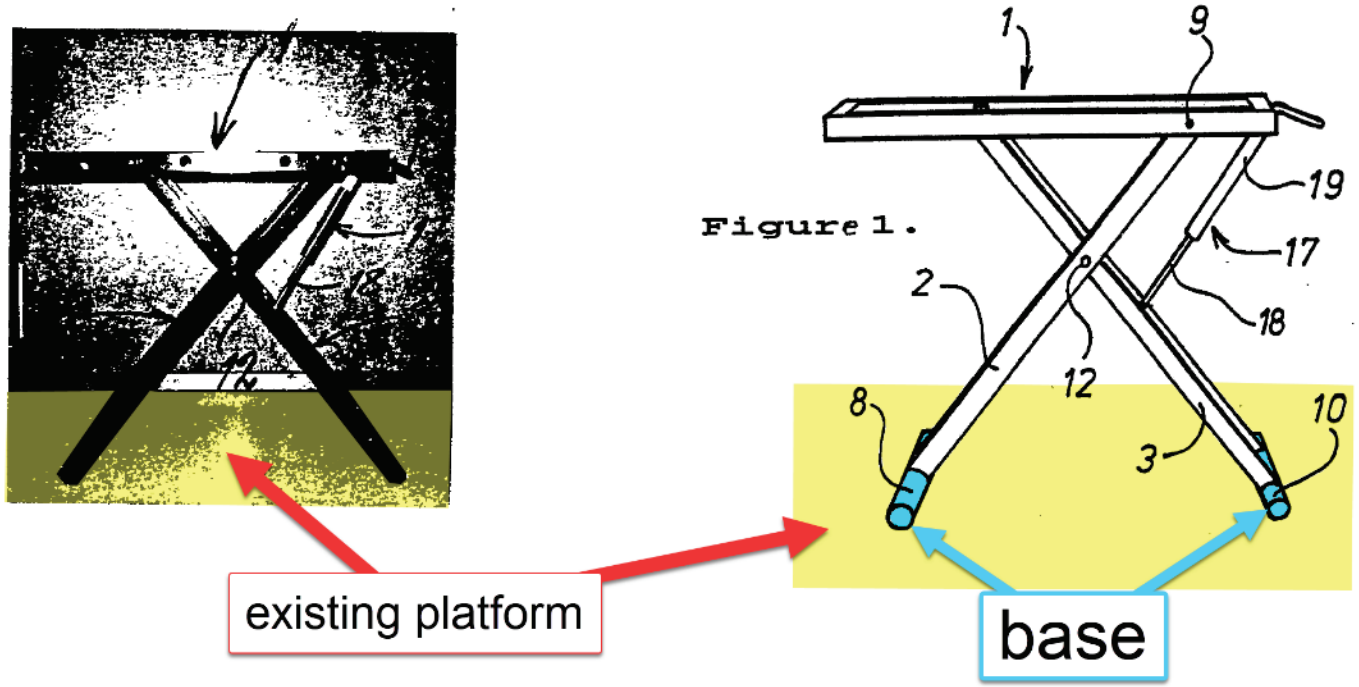

[32]

As shown previously, Lindahl discloses a work surface platform that is configured to be used in caravans and motorhomes.

"The present invention relates to a table stand intended for use preferably in caravans and motorhomes, wherein the stand supports at the top thereof a frame-like part on which a tabletop is intended to be placed… Firstly the table is intended for use as a conventional dining table…" Lindahl 1:3-6, 13-14

[32] Lindahl cover page and Figure 1, combined and annotated

"Each leg member 2, 3 includes two substantially parallel rods or bars 4, 5; 6, 7, wherein the two bars of each pair of bars are spaced from one another and are connected together at both ends thereof by means of a respective transverse rod 8, 9; 10, 11, wherein the lowermost transverse rods 8; 10 function to support the stand against the underlying support surface…" Lindahl 3:3-10

A POSITA will recognize that the floor of a caravan or motorhome is an existing platform on which the desk is taught to be used. The floor of a caravan or motorhome is a large flat surface consistently held at a height elevated from the ground. Lindahl also has a base in the form of transverse rods 8 and 10. The base supports the stand against the underlying support surface.

Yamamoto also discloses a base configured to sit on an existing platform.

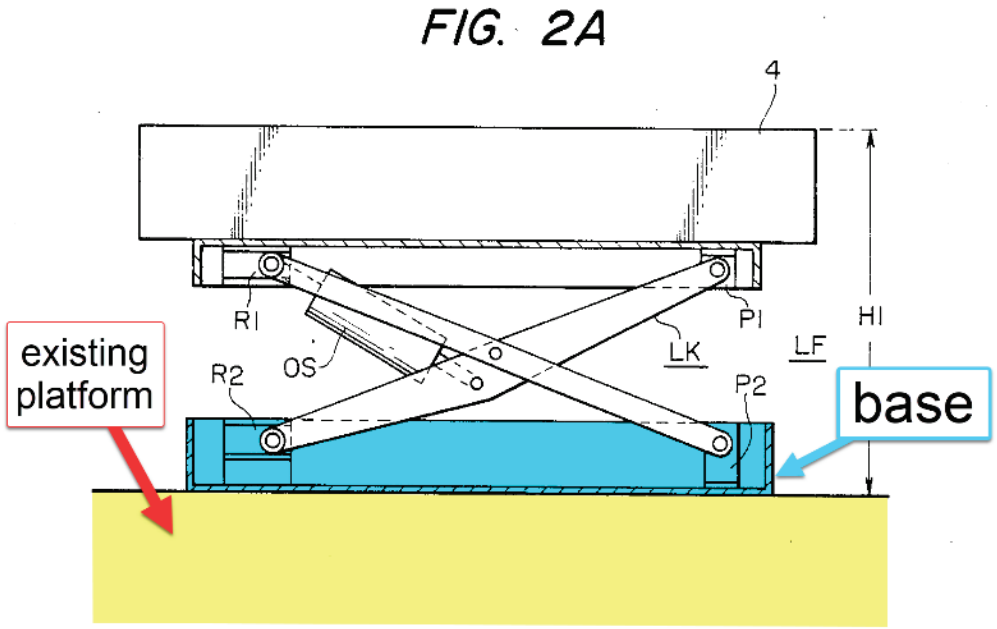

[33]

"The conventional fluidized bed has a fixed height. However, there has been a demand for a fluidized bed having an adjustable height, specifically, ***one in which the height of the bed above the floor*** *can be made as small as possible for ease in transferring a patient onto the bed or when a patient gets onto or off the bed, and placed at a suitable height when the patient is lying on the bed for administering treatment to the patient." Yamamoto 1:53-60 (emphasis added)*

[33] Yamamoto Figure 2A, annotated

As shown, above, Yamamoto discloses a base which supports the Yamamoto mechanism on the floor, i.e. an existing platform. Whether the floor is the foundation of a base floor or a floor several stories up, a POSITA will easily recognize that a floor is an existing platform.	
1d. a height adjustment mechanism connecting the work surface platform and the base, the height adjustment mechanism including:	**YES:** Lindahl in view of Yamamoto discloses a height adjustment mechanism connecting the work surface platform and the base.

The Lindahl mechanism uses a combination of a scissor linkage and a locking gas spring to serve as a height adjustment mechanism. The height adjustment mechanism connects the work surface platform to the base.

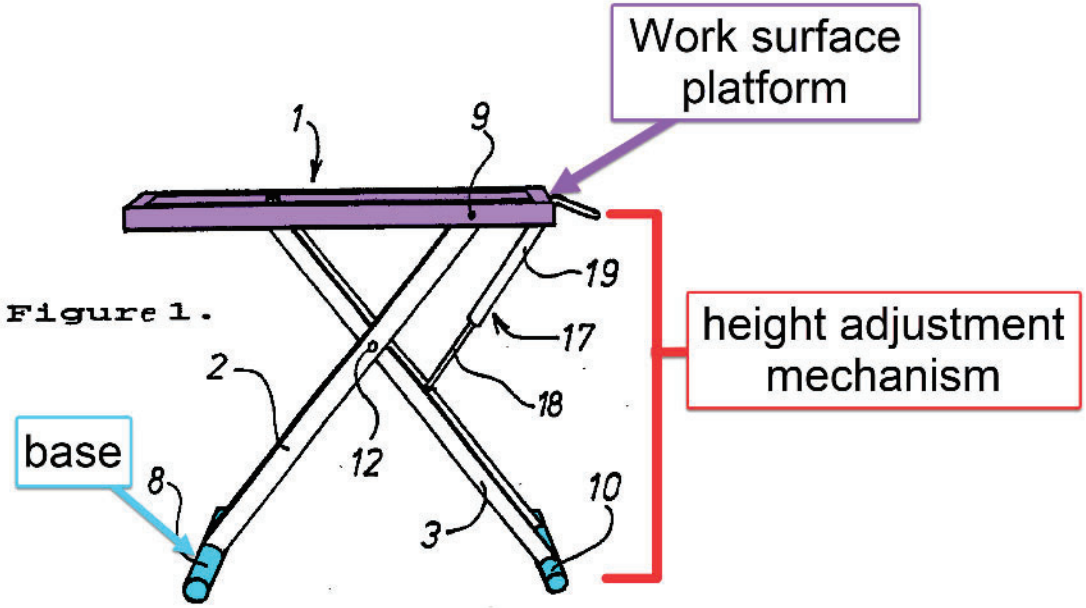

[34]

"A gas-spring, or piston-cylinder device, so arranged in the stand ***as to enable the frame-like part of said stand to be adjusted vertically, both downwardly and upwardly****, wherein the gas-spring can be blocked in its position, so as to maintain the position of the frame-like part and therewith the position of the tabletop in relation to the underlying supporting surface. This enables the frame-like part, and therewith the tabletop, to be adjusted continually to any selected vertical position, in which position the gas-spring is locked." Lindahl 2:12-22 (emphasis added)*

[34] Lindahl Figure 1, annotated

"The stand includes at least two leg members which are hinged or pivotally connected together such as to enable the parts of said leg members located on mutually opposite side of the hinge or pivot to be moved towards and away from one another in a scissor-like fashion." Lindahl 1:30-35

Yamamoto also discloses a height adjustment mechanism:

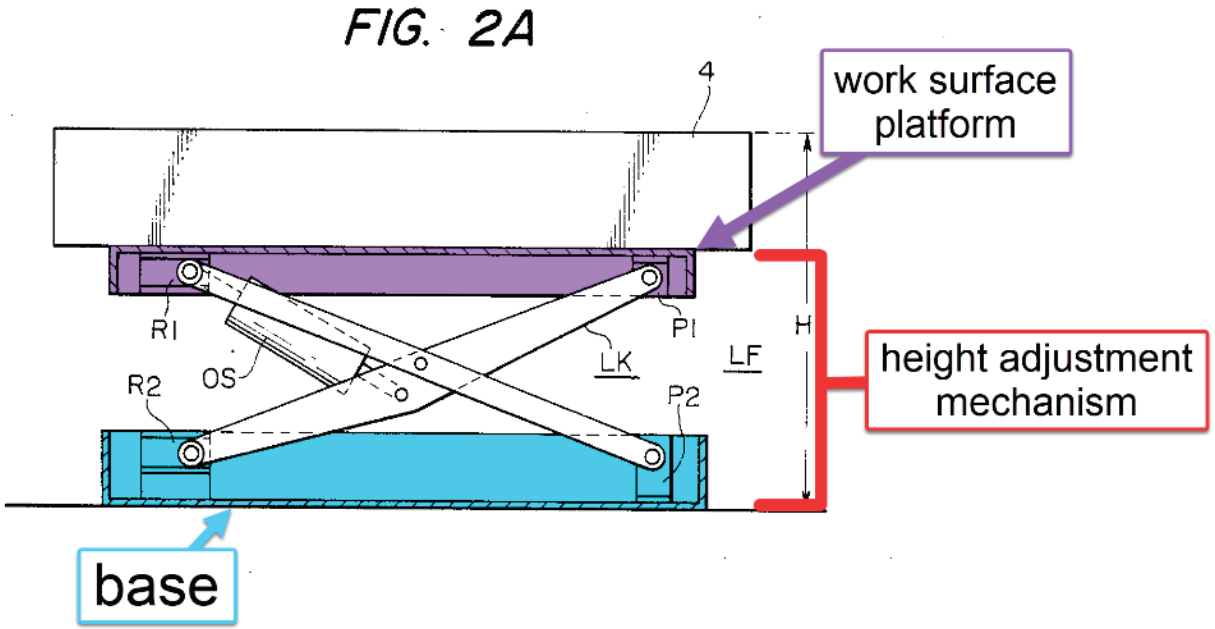

[35]

"FIG. 2 illustrates the arrangement of such a mechanism for producing vertical movement.
The height of the fluidized bed, and hence the height of the tank 4, are freely adjustable by a lifter LF between a maximum height H1 and a minimum height H2. The lifter LF includes a link mechanism LK having bearings P1 and P2 fixed to ends thereof and rollers R1 and R2 on opposite ends thereof which are movable along a guide rail." Yamamoto 1:63-2:3

As shown above, both Lindahl and Yamamoto disclose a height adjustment mechanism that connects the work surface platform and the base. A POSITA will recognize that both Lindahl and Yamamoto use a scissor linkage in combination with a cylinder style force actuator and that the height adjustment mechanism of Yamamoto could be used in the Lindahl mechanism and vice versa.

[35] Yamamoto Figure 2A, annotated

1d1. a set of pivot arms that connect at a scissoring pivot point creating a scissoring motion when raising and lowering the work surface platform to various heights;	**YES:** Both Lindahl and Yamamoto have a set of pivot arms that connect at a scissoring pivot point creating a scissoring motion when raising and lowering the work surface platform to various heights.

The pivot arms below are part of the height adjustment mechanism:

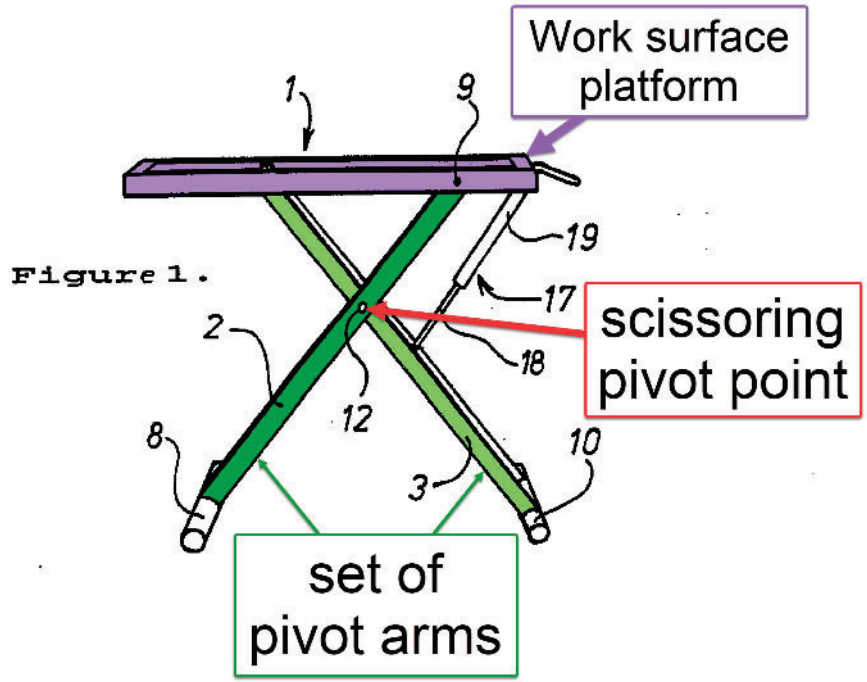

[36]

As shown above, Lindahl has a set of pivot arms, items 2 and 3 above. These legs connect at a scissoring pivot point (pin 12). Together, these legs and pin create a scissoring motion when raising and lowering the work surface to various heights.

"Figures 1 and 2 illustrate the inventive stand. The stand includes a frame-like part 1 which is ***carried by two leg members 2, 3****. … **The two leg members 2, 3**, i.e. the pairs of bars 4, 5; 6, 7* ***are mutually connected by means of a hinge means or pivot in the form of a transverse rod 12****, which extends through the bars approximately midway therealong the rods, preferably at a location which is slightly above centre.* ***This enables the two ends of respective pairs of bars 4, 5; 6, 7 to be moved towards and away from each other in a scissor-like fashion and therewith move the frame-like part 1 vertically.****"* (Lindahl 3:1-3, 11-20, emphasis added)

[36] Lindahl Figure 1, annotated

"The present invention relates to a table stand for use preferably in caravans and motorhomes, wherein the top of the stand is provided with a frame-like part on which a tabletop is intended to be placed and which is ***adjustable in the height direction so that the tabletop can be adjusted vertically to different positions****." Lindhal, Abstract*

As shown in the citations above, the Lindahl mechanism has a set of pivot arms that connect at a scissoring point. These leg members form a scissor mechanism that adjusts the work surface platform to various heights.

Yamamoto also discloses a set of pivot arms that connect at a scissoring pivot point creating a scissoring motion when raising and lowering the works surface platform to various heights. For example, the pivots arms and scissoring pivot point are shown below:

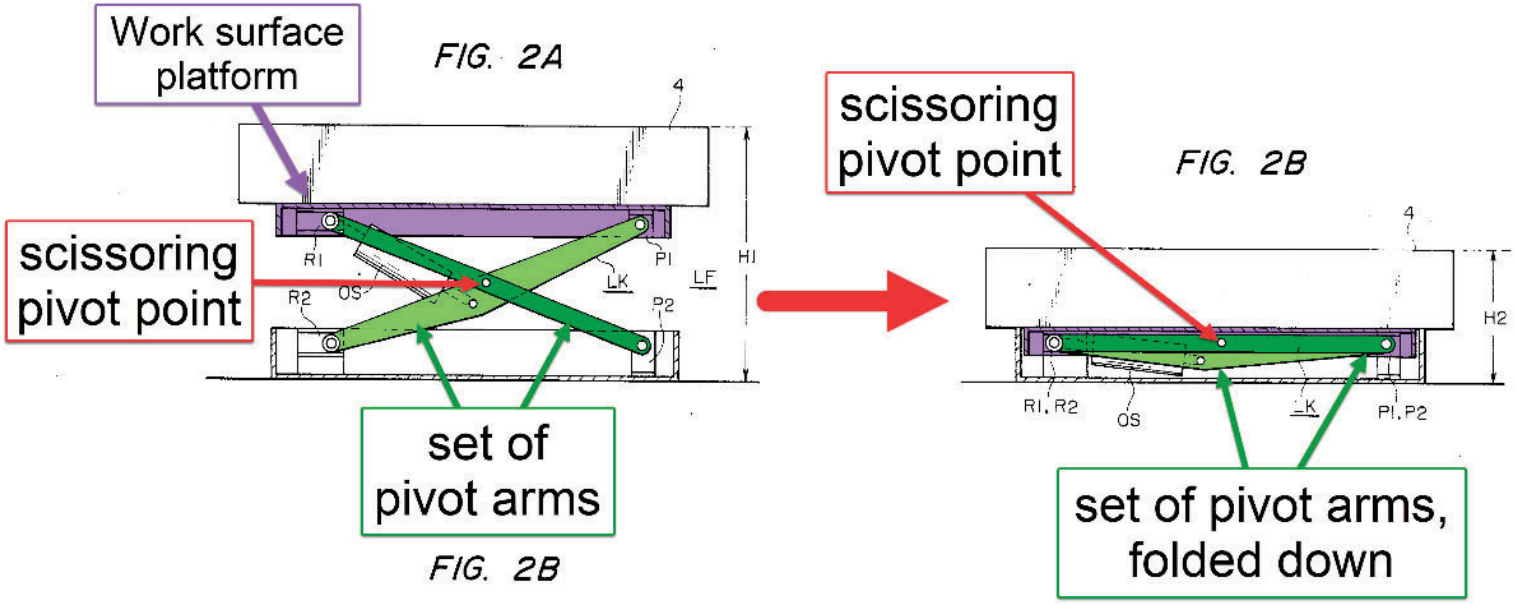

[37]

"FIG. 2 illustrates the arrangement of such a mechanism for producing vertical movement.
The height of the fluidized bed, and hence the height of the tank 4, are freely adjustable by a lifter LF between a maximum height H1 and a minimum height H2. The lifter LF includes a link mechanism LK having bearings P1 and P2 fixed to ends thereof and rollers R1 and R2 on opposite ends thereof which are movable along a guide rail." Yamamoto 1:63-2:3

[37] Yamamoto Figures 2A and 2B, combined and annotated

As shown above, Yamamoto discloses a set of pivot arms. These are connected in a linkage making a scissor mechanism which is used to lift the patient bed and to set it at various heights. As the lifting mechanism is moved up and down, the pivot arms move with a scissoring motion. Between Figures 2A and 2B the same mechanism is shown in two different states of lift. By comparing the positions of the pivot arms, it can clearly be seen that scissoring motion takes place to move the lift mechanism from the position shown in Figure 2A to the position shown in Figure 2B.

A POSITA would understand that scissor mechanisms are suitable for vertical lifting applications such as Lindahl and Yamamoto. Scissor mechanisms are well-known and are very commonly built with two sets of pivots arms.

1d2. a base pivot point fixed relative to the base and connecting the base and the set of pivot arms;	**YES:** Lindahl in view of Yamamoto discloses a base pivot point fixed relative to the base and connecting the base and the set of pivot arms.

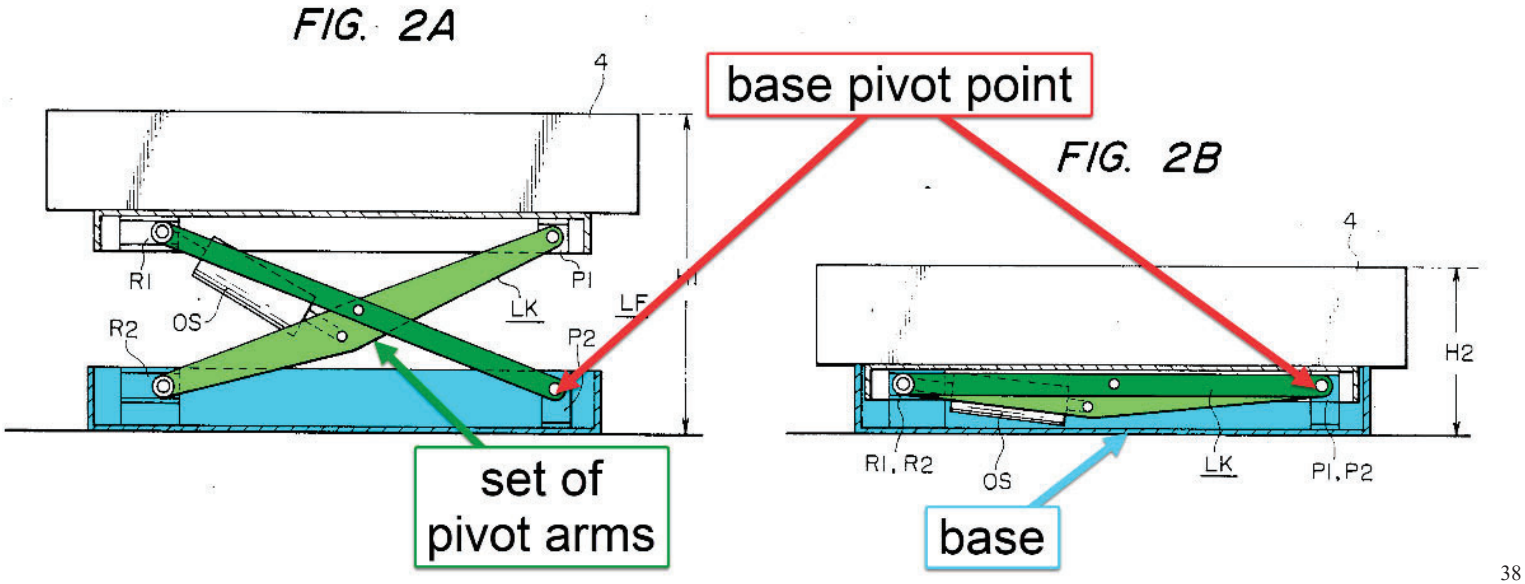

[38]

"FIG. 2 illustrates the arrangement of such a mechanism for producing vertical movement.
The height of the fluidized bed, and hence the height of the tank 4, are freely adjustable by a lifter LF between a maximum height H1 and a minimum height H2. The lifter LF includes a link mechanism LK having bearings P1 and P2 fixed to ends thereof and rollers R1 and R2 on opposite ends thereof which are movable along a guide rail." Yamamoto 1:63-2:3

[38] Yamamoto Figures 2A and 2B, combined and annotated

As shown above, Yamamoto discloses a base pivot point which connects the base and the set of pivot arms. A POSITA will understand that this is ubiquitous with scissor lift mechanism design. It is a required part of any scissor lift mechanism that is fixed to a base as it is one of the main supports for the entire lift mechanism. As discussed previously, a POSITA will be motivated to combine the base as disclosed in Yamamoto with Lindahl. Thus, Lindahl in view of Yamamoto would include this pivot point as is so typical in design of scissor lifts.	
1d3. a platform pivot point fixed relative to the work surface platform and connecting the work surface platform and the set of pivot arms;	**YES:** Both Lindahl and Yamamoto have a platform pivot point fixed relative to the work surface platform and connecting the work surface platform and the set of pivot arms.

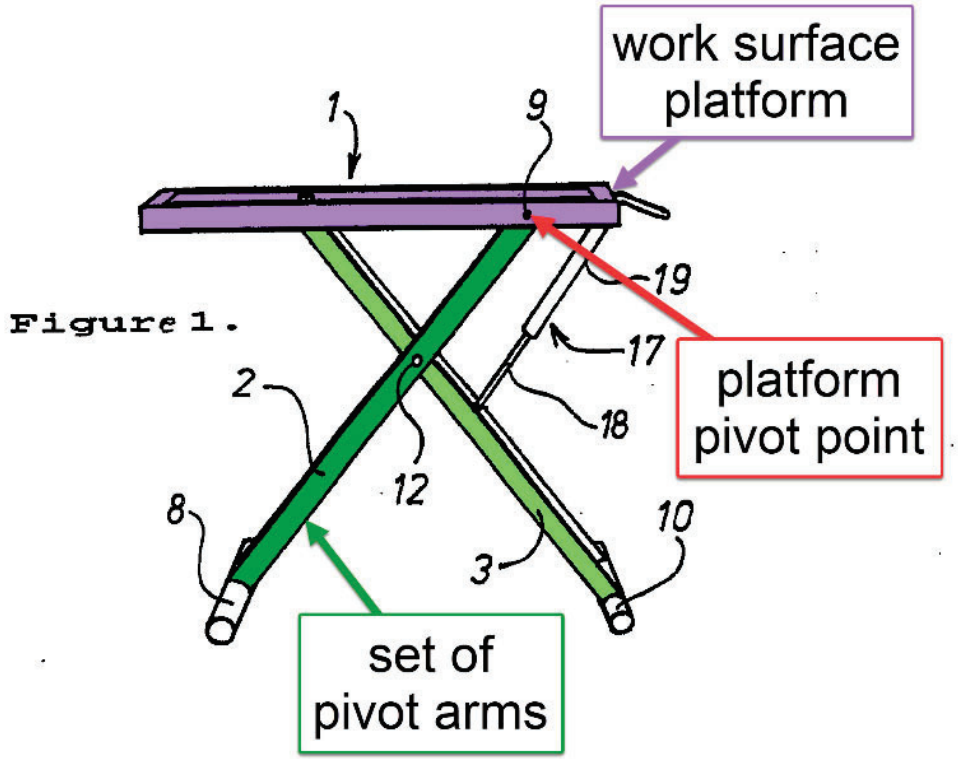

[39]

"Each leg member 2, 3 includes two substantially parallel rods or bars 4, 5; 6, 7, wherein the two bars of each pair of bars are spaced from one another and are connected together at both ends thereof by means of a respective transverse rod 8, 9; 10, 11, wherein the lowermost transverse

[39] Lindahl Figure 1, annotated

rods 8; 10 function to support the stand against the underlying support surface and wherein the upper, transverse rods 9; 11 are intended to coact with the frame-like part 1." Lindahl 3:3-11

As shown in the figure and citation above, Lindahl discloses transverse rod 9 which is a platform pivot point fixed relative to the work surface platform which connects the work surface platform to a first set of pivots arms. A POSITA will recognize that this design layout is universally used with scissor lift mechanisms. It is ubiquitous and well-known and therefore not inventive. Lindahl simply provides yet one more example of this design layout.

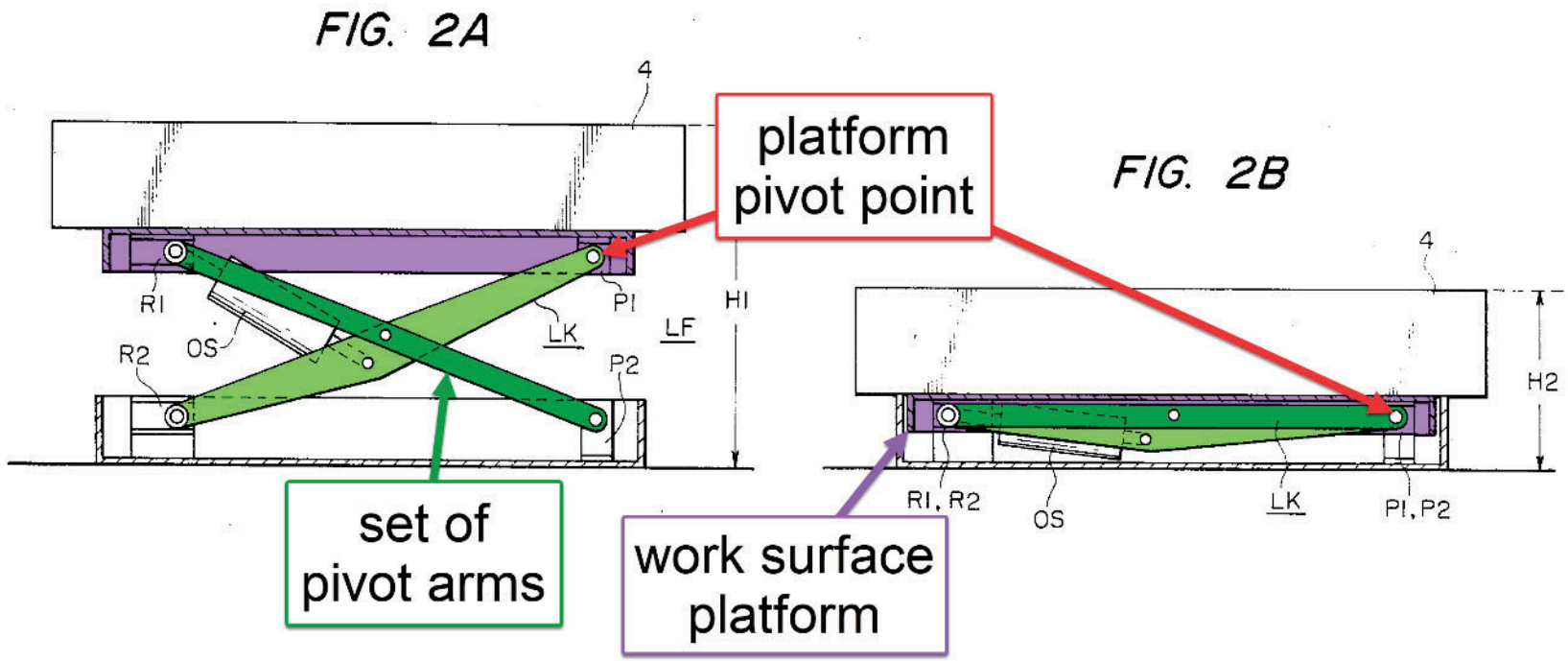

[40]

"The lifter LF includes a link mechanism LK having bearing P1 and P2 fixed to ends thereof and rollers R1 and R2 on opposite ends thereof which are movable along a guide rail" Yamamoto 1:68-2:3

As shown in the figure above, Yamamoto also discloses a platform pivot point as element P1 shown above. As discussed previously, this platform pivot point is ubiquitous in scissor lift linkage design. Yamamoto and Lindahl both disclose it and a POSITA would understand this pivot point exists merely by knowing that a scissor lift mechanism is involved in the design.

[40] Yamamoto Figures 2A and 2B, combined and annotated

1d4. a sliding mechanism on an end of an arm of the set of pivot arms between the end of the arm and either the work surface platform or the base; and	**YES:** Both Lindahl and Yamamoto disclose a sliding mechanism on an end of an arm of the set of pivot arms between the end of the arm and either the work surface platform or the base.

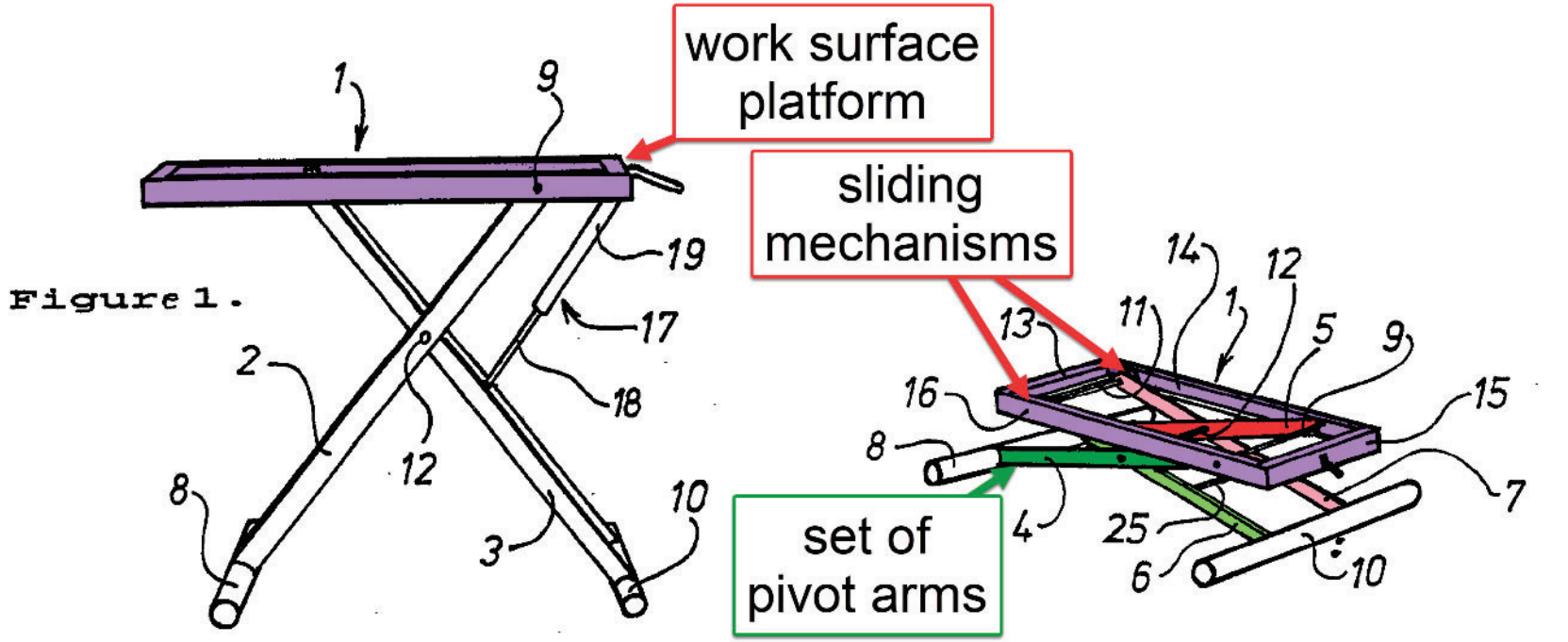

[41]

"The one rod 9 is pivotally mounted in the bars 14, 15, whereas the other ***transverse rod 11 is provided at both ends with suitable means for sliding in the U-shaped part of the bars*** *in order to achieve the aforesaid scissor-like movement of the leg members." Lindahl 3:31-4:3 (emphasis added)*

As shown above, Lindal discloses a sliding mechanism on the end of the pivot between the first set of pivot arms and the work surface platform. As shown in the specification of the '926 patent, the term "sliding mechanism" must be interpreted to include rolling contact. For example, the '926 patent states the following:

[41] Landahl Figures 1 and 2, combined and annotated

"FIG. 1C is a perspective view of an example adjustable desk with alternative sliding mechanisms that incorporate rolling wheels, and a keyboard tray mechanism" '926 patent 2:27-29

"Base 12 is connected to pivot point 26 and sliding mechanism 20. Sliding mechanisms 20 and 22 could also be directly connected to the arm(s) in the form of a slider or wheel, as portrayed in FIG. 1C." '926 patent 4:44-47

A POSITA would understand that a wheel is used for rolling contact which is typically different from sliding contact. Nevertheless, a POSITA would understand that scissor linkages can are often are made with rolling OR sliding contact and they function just the same. The only difference is that sliding contact has slightly more drag than rolling contact. This drag is commonly minimized for example through the use of low friction wear pad materials. For example, the Pop Up brand Push Pro scissor lift (available at least as early as July 2014) uses a sliding contact at the movable pivot of a scissor lift as opposed to a roller.[42]

[42] See Operators Manual - Pop Up - Push Pro.pdf, cover page, and Figures 8.14 and 8.15

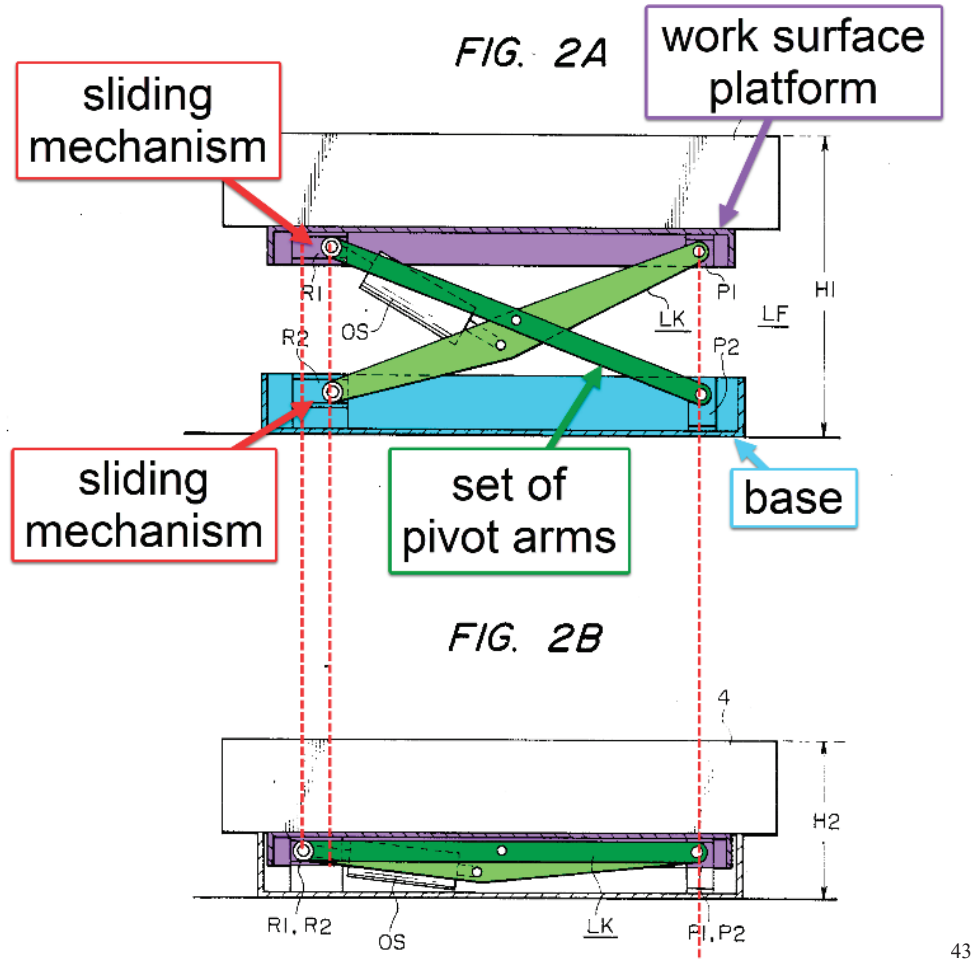

[43]

"The lifter LF includes a link mechanism LK having bearing P1 and P2 fixed to ends thereof and rollers R1 and R2 on opposite ends thereof which are movable along a guide rail" Yamamoto 1:68-2:3

As shown in the figure above, Yamamoto also discloses a set of rollers R1 and R2 which allow for what the '926 patent considers to be sliding (i.e. translating) movement as is well-known and ubiquitous in the design of a common scissor lift linkage. It is kinematically necessary as a part

[43] Yamamoto Figures 2A and 2B, combined and annotated

of the design of a scissor lift linkage to allow these pivot points to move in this way. Yamamoto discloses an extremely common arrangement where these pivot points translate both in the top and the bottom. That is to say between the scissor links and the work surface platform as well as between the scissor links and the base.

1d5. a gas spring that assists in elevation of the work surface platform by applying a force to rotate one of the set of pivot arms as part of the scissoring motion,	**YES:** Lindahl discloses a gas spring that assists in the elevation of the work surface platform by applying a force to rotate one of the set of pivot arms as part of the scissoring motion.

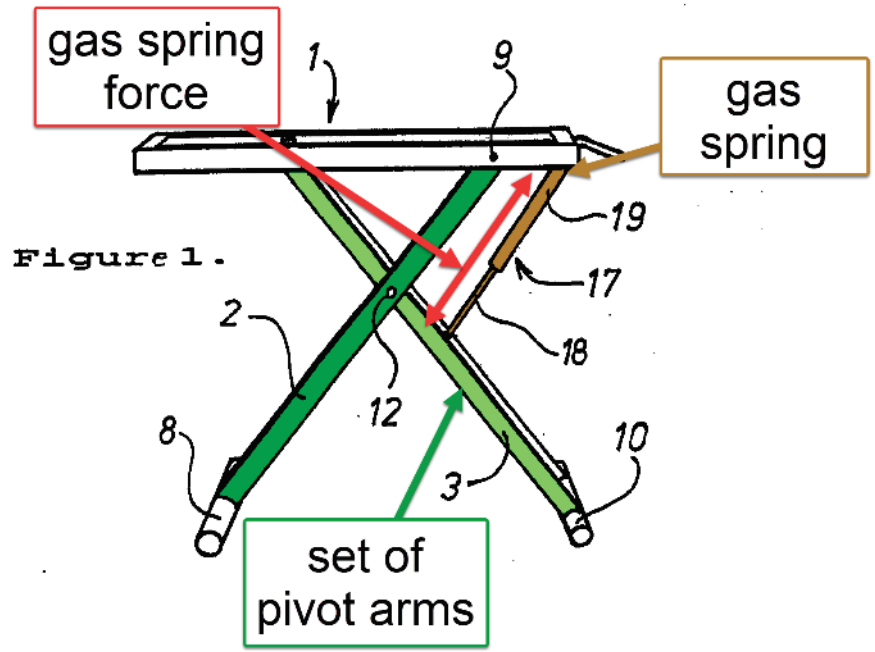

[44]

"An essential feature of the invention is that a blockable gas-spring 17, or piston-cylinder device is provided for enabling the position of the frame-like part 1 to be adjusted vertically in a smooth continuous fashion, both in an upward and in a downward direction." Lindahl 4:5-9

As shown in the figure and the citation above, Lindahl discloses a gas spring that is used to facilitate the movement of the scissor linkage and therefore work surface platform. As shown above, the gas-spring of Lindahl is connected between the work surface platform and the pivot arms. As such, it applies force to the pivot arms as well as the work surface platform as part of the scissoring motion. This force causes the scissor links to rotate as part of the ordinary movement of a scissor mechanism. I further note that Lindahl provides yet another teaching of the

[44] Lindahl Figure 1, annotated

interchangeability of a gas-spring and a hydraulic cylinder. As shown in the citation above, Lindhal states, "a blockable gas-spring 17, or piston-cylinder device." A POSITA would understand that a lockable gas-spring is a piston cylinder device. A POSITA would also understand that a hydraulic or pneumatic cylinder is a piston-cylinder device. Thus, the Yamamoto mechanism also shows a piston-cylinder device between the work surface platform and the pivoting links[45] as is well-known in the typical and ordinary design of scissor lift mechanisms.

1d6. wherein one end of the gas spring is fixed to the work surface platform, wherein the gas spring acts as a locking device that holds the work surface platform at various vertical heights above the base, and	**YES:** Lindahl discloses that one end of the gas spring is fixed to the work surface platform, and wherein the gas spring acts as a locking device that holds the work surface platform at various vertical heights above the base.

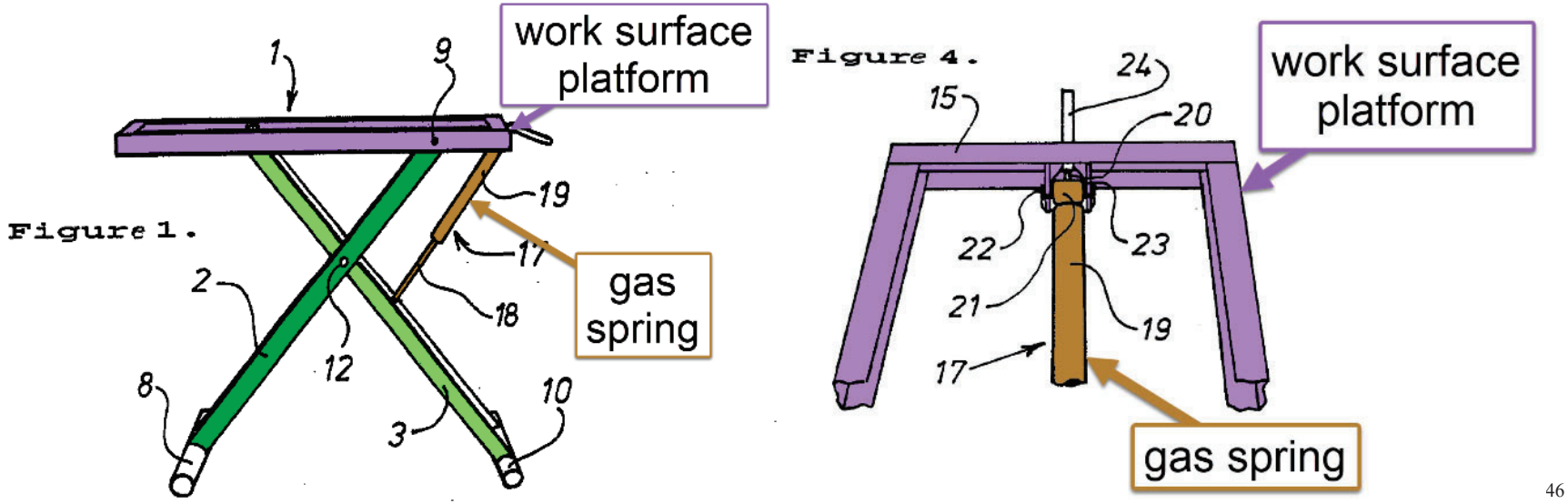

[46]

"An essential feature of the invention is that a blockable gas-spring 17, or piston-cylinder device is provided for enabling the position of the frame-like part 1 to be adjusted vertically in a smooth continuous fashion, both in an upward and in a downward direction. The gas-spring includes a bottom part 18 which is pivotally connected to the leg member 3 beneath the pivot rod 12, and an upper part 19 which is pivotally connected to the transverse frame-bar 15 on the same side of a vertical plane passing through the rod 12 as the lower part 18 (see also Figures 3, 4)." Lindahl 4:5-15

[45] See Yamamoto Figure 2A element OS which is connected to R1 and LK.
[46] Lindahl Figures 1 and 4, combined and annotated

As shown above, Lindahl discloses the use of a gas spring to facilitate the movement of the scissor linkage. Specifically, the gas-spring cited is a locking gas-spring which as discussed previously is a well-known off-the-shelf component that any POSITA would be very familiar with. As Lindahl describes the locking gas spring is used to set the work surface platform at various heights in ordinary usage of the Lindahl apparatus. As discussed previously, Lindhal describes that any piston-cylinder actuator (an example of which is a locking gas spring) can be used with their machine. A POSITA will understand that a hydraulic cylinder, such as used by Yamamoto is also a piston cylinder device that can be used to lock the vertical position of the platform at any height within its ordinary range of motion. The hydraulic cylinder of Yamamoto (item OS[47]) is a piston-cylinder device that is attached to the roller that engages with the work surface platform on one end as can be clearly seen in view 2A of Yamamoto. A POSITA would understand that the hydraulic cylinder of Yamamoto could be replaced with a locking gas spring as described in this claim element.	
1d7. wherein the gas spring is under the work surface platform and above the existing platform.	**YES:** Lindahl in view of Yamamoto discloses that the gas spring is under the work surface platform and above the existing platform.

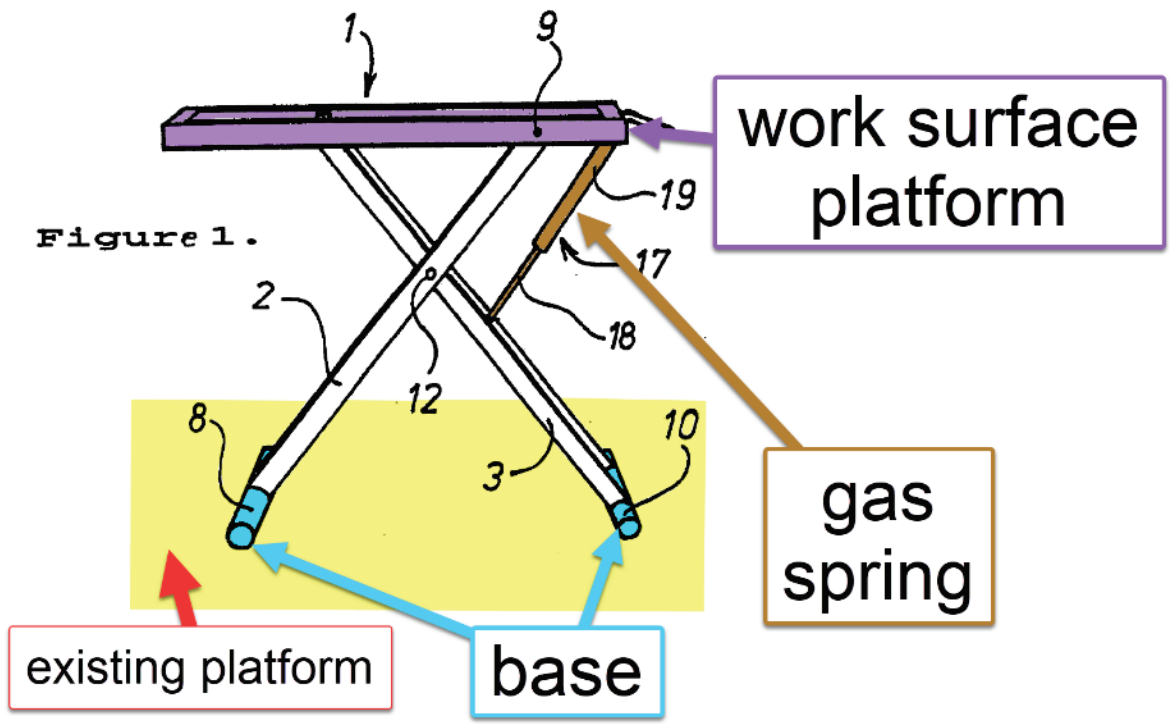

[47] Yamamoto 2: 3

"The present invention relates to a table stand intended for use preferably in caravans and motorhomes, wherein the stand supports at the top thereof a frame-like part on which a tabletop is intended to be placed… Firstly the table is intended for use as a conventional dining table…" Lindahl 1:3-6, 13-14 *"The stand includes a frame-like part 1 which is carried by two leg members 2, 3." Lindahl 3:1-3* *"An essential feature of the invention is that a blockable gas-spring 17, or piston-cylinder device is provided for enabling the position of the frame-like part 1 to be adjusted vertically in a smooth continuous fashion, both in an upward and in a downward direction." Lindahl 4:5-9* As shown above, Lindahl discloses a scissor lift platform with a gas spring. As can be seen in the figure above, the gas spring is located underneath the work surface platform. As can also be seen in the figure above, the gas spring is located above the existing platform.	
2P. The desktop workspace of claim 1,	**YES:** As shown above, Lindahl in view of Yamamoto, and in further view of HJ Zottel discloses the desktop workspace of claim 1.
2a. wherein the slidable tray is mounted to an underside of the work surface platform with a slider such that the slidable tray is selectively positionable between the stored position under the work surface platform and the extended position that is outward and lowered with respect to the work surface platform,	**YES:** Lindahl in view of Yamamoto and in further view of HJ Zottel and the knowledge of a POSITA discloses that the slidable tray is mounted to an underside of the work surface platform with a slider such that the slidable tray is selectively positionable between the stored position under the work surface platform and the extended position that is outward and lowered with respect to the work surface platform.

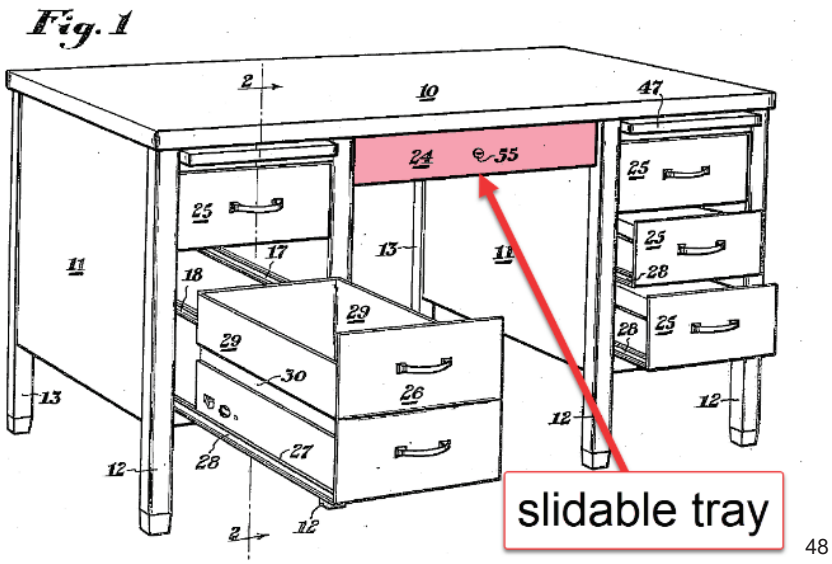

[48]

"The primary objects of the instant invention are to provide a desk having a plurality of box drawers and one or more vertical letter file drawers…" HJ Zottel 1:4-6

"The desk comprises a top 10 supported by drawer supporting pedestals 11 having front legs 12 and rear legs 13 attached thereto" HJ Zottel 1:47-50

"As best shown in Figure 1, the desk is provided with a center drawer 24 between the pedestals 11" HJ Zottel 2:9-11

As shown above, HJ Zottel discloses a slidable tray (drawer 24) which is mounted under the work surface platform (desk top 10). As discussed previously, when combining the teachigns of HJ Zottel with Lindahl in view of Yamamoto, a POSITA will be motivated to use a top-mount drawer style. This is because that is the only reasonable design choice for a POSITA to make with this particular arrangmenet as previously discussed. More generally, drawer mounting style is merely design choice. They can generally be on the bottom, on the side, or on the top with respect to the drawer. For example, US 5,294,087 to Drabczyk discloses an under-desk slider tray wherein the sliders mount directly to bottom of the desk top surface.

[48] HJ Zottel Figure 1, annotated

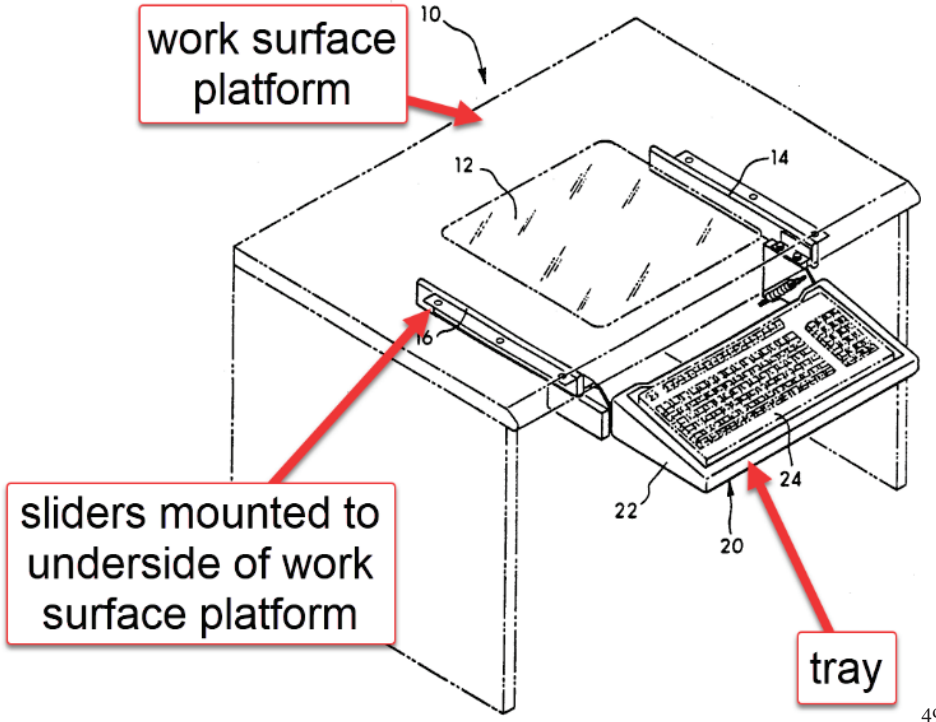

[49]

"Keyboard holder 20 is secured to workstation 10 to slide from an out of the way position beneath the top of workstation 10 to a working position as shown in FIG. 1. Keyboard holder 20, shown in FIG. 1, includes a molded plastic tray 22, which holds most types and sizes of keyboards 24." Drabczyk 3:36-41

With or without the teachings of Drabczyk, the mounting of slides for drawers is so well-known that a POSITA will recognize the various ways this can be accomplished. Drawers have been known at least since the mid 1600's[50] and the various permutations and mounting styles are well known. A POSITA will further understand that drawers are a common feature that can be (and often is) added to any desk design, for instance the desktop shown in HJ Zottel. Thus, the addition of a drawer to mount under a desk top surface is not inventive in the slightest as this type of design has been well known at least for nearly the last 100 years, as demonstrated by HJ Zottel. Further, a POSITA will understand that drawers are commonly designed to slide in to a stored position or out into a open position. For example, Figure 1 of HJ Zottel shows drawer 24 in a stored

[49] Drabczyk Figure 1, annotated
[50] <https://www.penderynantiques.co.uk/the-history-of-the-chest-of-drawer/> accessed Dec 20, 2024

position and drawer 26 slid out into an open position. As the tray is mounted to the underside of the work surface platform, a POSITA will further understand that when open, the bottom surface of the tray (drawer 24) will be outward and lowered with respect to the work surface platform.	
2b. wherein the slider includes a channel offset from the underside of the work surface platform, forming a gap between the slidable tray and the underside of the work surface platform.	**YES:** Lindahl in view of Yamamoto and in further view of HJ Zottel and the knowledge of a POSITA discloses that the slider includes a channel offset from the underside of the work surface platform, forming a gap between the slidable tray and the underside of the work surface platform.

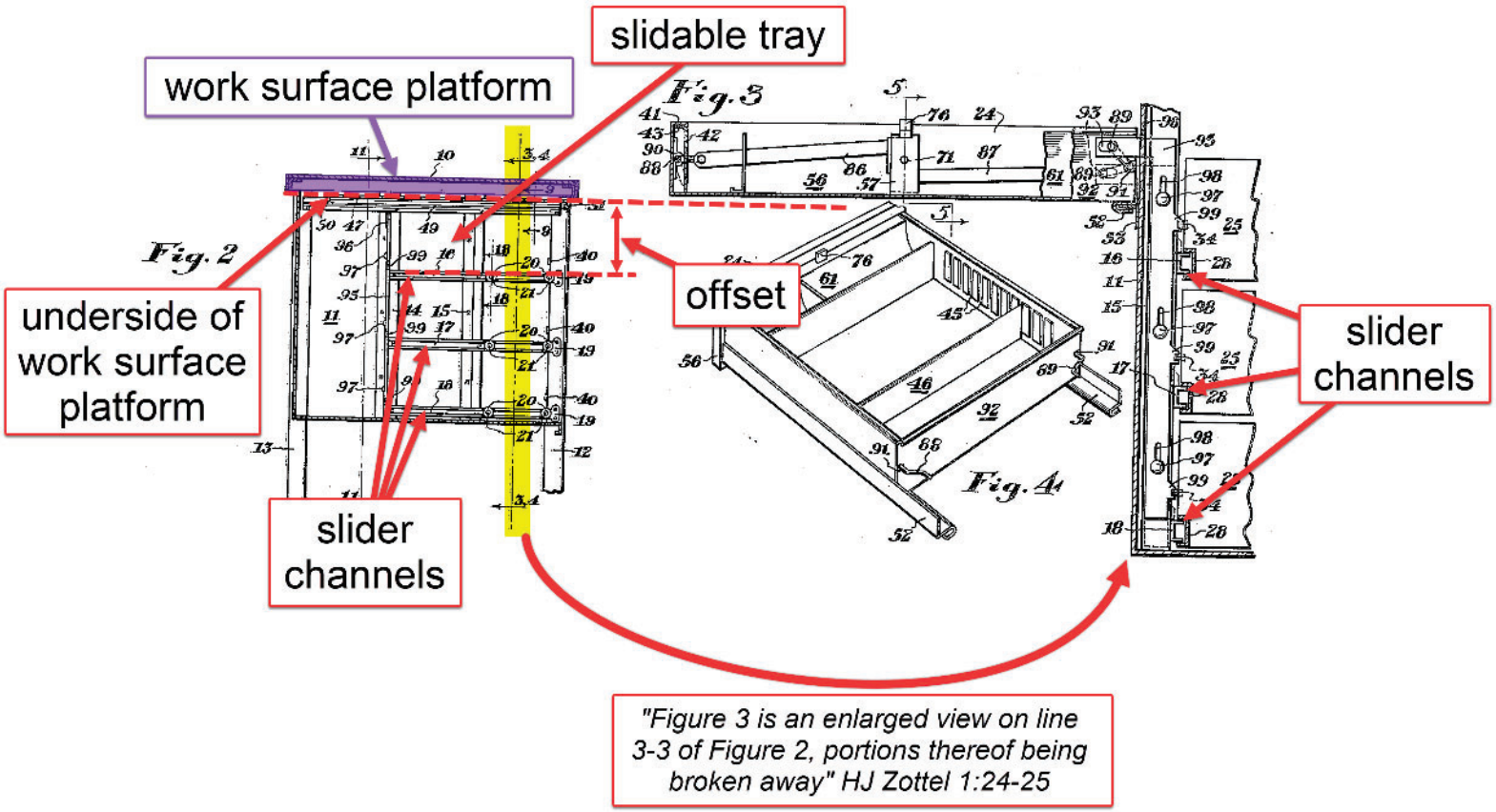

[51]

[51] HJ Zottel, Figures 2, 3, and 4, combined and annotated

"Each drawer 25 and 26 is provded with a recess 27 along eah of its lower side edges and channel runners 28 are secured as by spot welding within each recess 27. The runners 28 of each drawer slidably engage a pair of drawer guides 16, 17 or 18 to thus slidably mount each drawer within a pedestal" HJ Zottel 2: 14-20

As shown above, HJ Zottel includes multiple channels (channel runners 28) that are offset from the underside of the work surface platform, forming a gap between the slidable tray and the underside of the work surface platform. As discussed previously, a POSITA will understand the well-known options and permutations of drawer designs and mounting. This includes, for example, mouting on the bottom, the side, or the top of the drawer. As discussed previously, a POSITA will be motivated to use a top-mounted drawer when adding the teachings of HJ Zottel to Lindahl in view of Yamamoto. When this is done, the channel runners as disclosed by HJ Zottel will be located more towards the top of the drawer as opposed to the bottom.

In addition to this, top-mounted drawers were well known; an example of which is shown in Drabczyk. In particular, Drabczyk Figure 2 shows that there is a channel offset from the underside of the work surface platform.

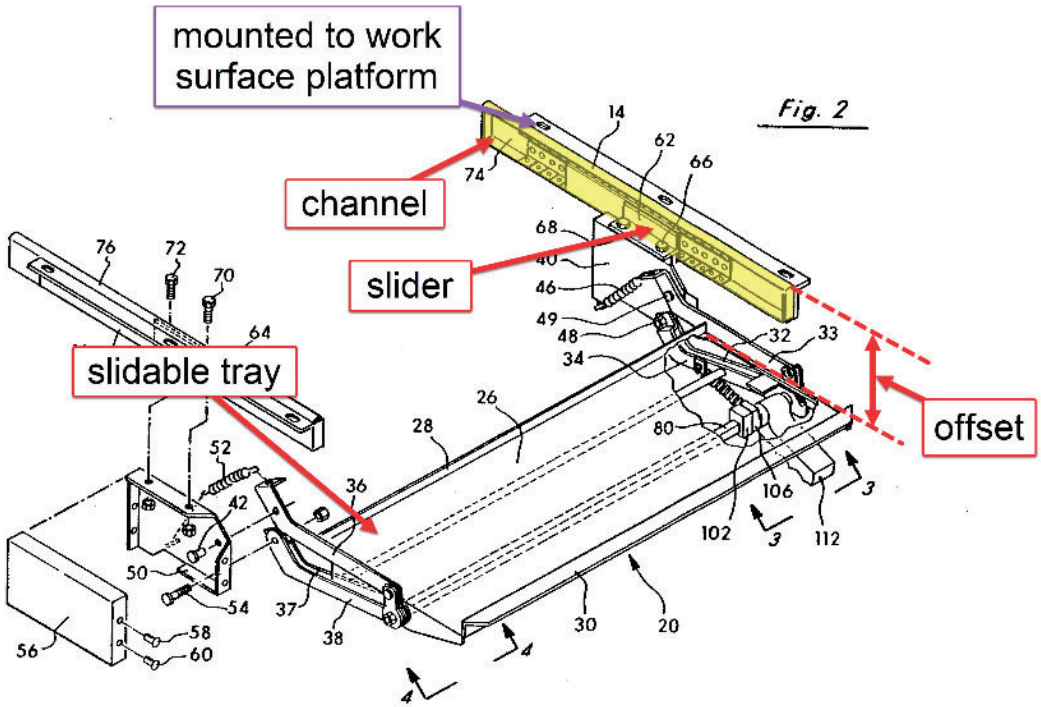

[52]

[52] Drabczyk Figure 2, annotated

"Keyboard holder 20 is secured to workstation 10 to slide from an out of the way position beneath the top of workstation 10 to a working position as shown in FIG. 1. Keyboard holder 20, shown in FIG. 1, includes a molded plastic tray 22, which holds most types and sizes of keyboards 24." Drabczyk 3:36-41

"Mounting plates 40, 42 are affixed to slide brackets 62, 64, respectively by bolts 66-72. Slide brackets 62, 64 slide within extendible tracks 74, 76 on mounting brackets 14, 16. ***The design and operation of slide brackets 62, 64 and mounting brackets 14, 16 are conventional in design and are not discussed in any further detail.*** *Thus, support tray 26, along with keyboard tray 22 and keybaord 24 are movable from an out of the way position beneath the upper surface of workstation 10 to a working position shown in FIG. 1." Drabczyk 3:65-4:6 (emphasis added)*

As shown above, Drabczyk demonstrates a well-known slidable tray arrangement wherein the slider has a channel which is offset from the underside of the work surface platform. This offset forms a gap between the slidable tray and the underside of the work surface platform. Further, I note that Drabczyk describes this arrangemnt as conventional in design, i.e. that it is well-known. Thus, as discussed before, a POSITA would understand with or without Drabczyk that drawers and slidable trays are reguarly mounted and arranged in this way.

3P. The desktop workspace of claim 2,	**YES:** As shown above, Lindahl in view of Yamamoto, and in further view of HJ Zottel and the knowledge of a POSITA discloses the desktop workspace of claim 2.
3a. further comprising a bracket fixed to the underside of the work surface platform, wherein the channel is mounted to the bracket such that the channel is offset from the underside of the work surface platform.	**YES:** Lindahl in view of Yamamoto and in further view of HJ Zottel and the knowledge of a POSITA, discloses comprising a bracket fixed to the underside of the work surface platform, wherein the channel is mounted to the bracket such that the channel is offset from the underside of the work surface platform.

As discsused previously, a POSITA will understand the ordinary and customary ways in which drawers are mounted include mounting on the bottom, the side, or the top. As discussed previously, when combining the teachigns of HJ Zottel with Lindahl in view of Yamamoto, a POISTA will be motivated to use a top-mounted drawer. When mounted to the top a POSITA will understand that this arrangement will generally include a bracket that mounts the slider channel to the underside of the work surface platform. This is a natural result in the ordinary course of well-known drawer mounting design.

In addition to this, as discussed previously, top-mounted drawers were well known; an example of which is shown in Drabczyk. In particular, Drabczyk Figure 2 shows that there is a channel offset from the underside of the work surface platform. Specifically, Drabczyk shows a bracket fixed to the underside of the work surface platform and a channel that is mounted to the bracket as shown below:

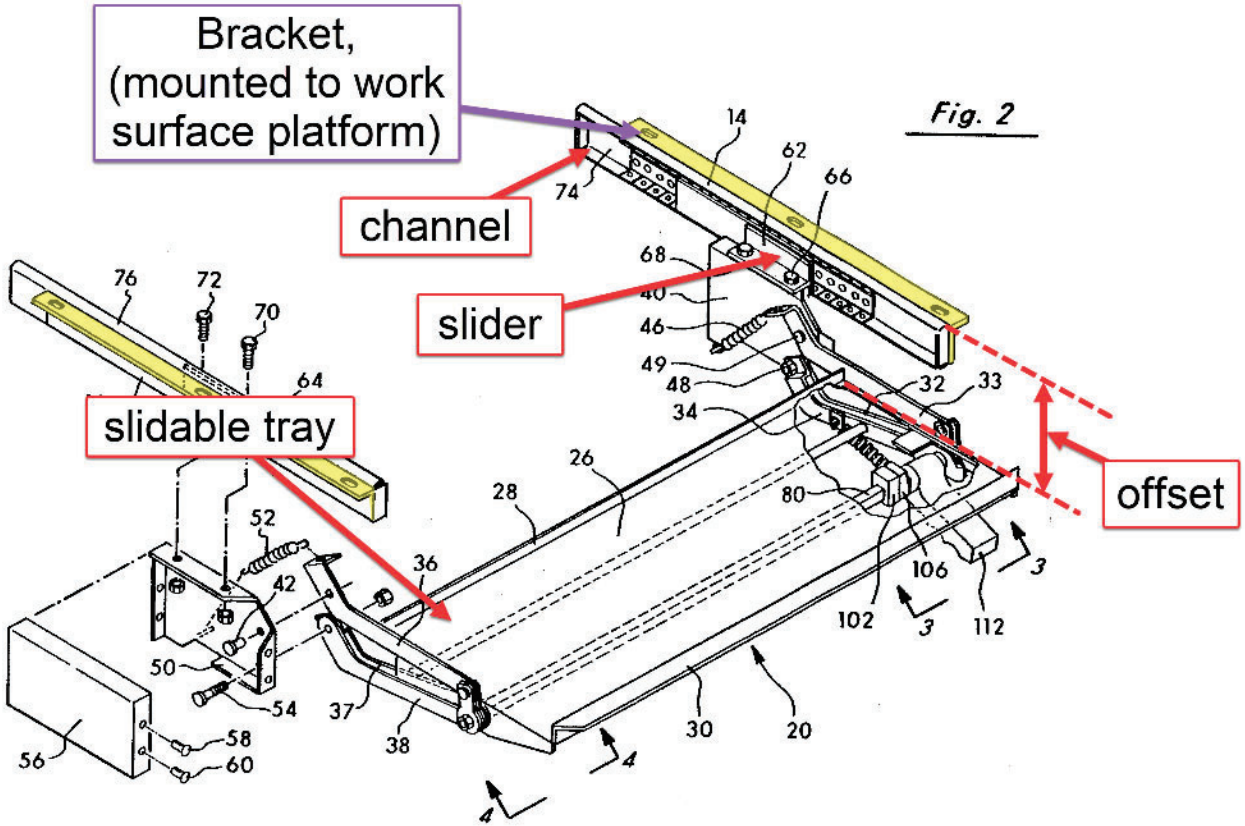

[53]

"Keyboard holder 20 is secured to workstation 10 to slide from an out of the way position beneath the top of workstation 10 to a working position as shown in FIG. 1. Keyboard holder 20, shown in FIG. 1, includes a molded plastic tray 22, which holds most types and sizes of keyboards 24." Drabczyk 3:36-41

"Mounting plates 40, 42 are affixed to slide brackets 62, 64, respectively by bolts 66-72. Slide brackets 62, 64 slide within extendible tracks 74, 76 on mounting brackets 14, 16. ***<u>The design and operation of slide brackets 62, 64 and mounting brackets 14, 16 are conventional in design and are not discussed in any further detail.</u>*** *Thus, support tray 26, along with keyboard tray 22 and keybaord 24 are movable from an out of the way position beneath the upper surface of workstation 10 to a working position shown in FIG. 1." Drabczyk 3:65-4:6 (emphasis added)*

[53] Drabczyk Figure 2, annotated

As shown above, Drabczyk demonstrates a well-known slidable tray arrangement wherein the slider has a bracket that is fixed to the underside of the work surface platform and fixed to the slider mechanism. This positions the slider channel to be offset from the underside of the work surface platform. This offset forms a gap between the slidable tray and the underside of the work surface platform. Further, I note that Drabczyk describes this arrangement as conventional in design, i.e. that it is well-known. Thus, as discussed before, a POSITA would understand with or without Drabczyk that drawers and slidable trays are regularly mounted and arranged in this way and would have been motivated to do the same.

4P. The desktop workspace of claim 1,	**YES:** As shown above, Lindahl in view of Yamamoto, and in further view of HJ Zottel discloses the desktop workspace of claim 1.
4a. wherein the set of pivot arms is a first set of pivot arms, the desktop workspace further comprising:	**YES:** Both Lindahl and Yamamoto disclose a set of pivot arms that is a first set of pivots arms.

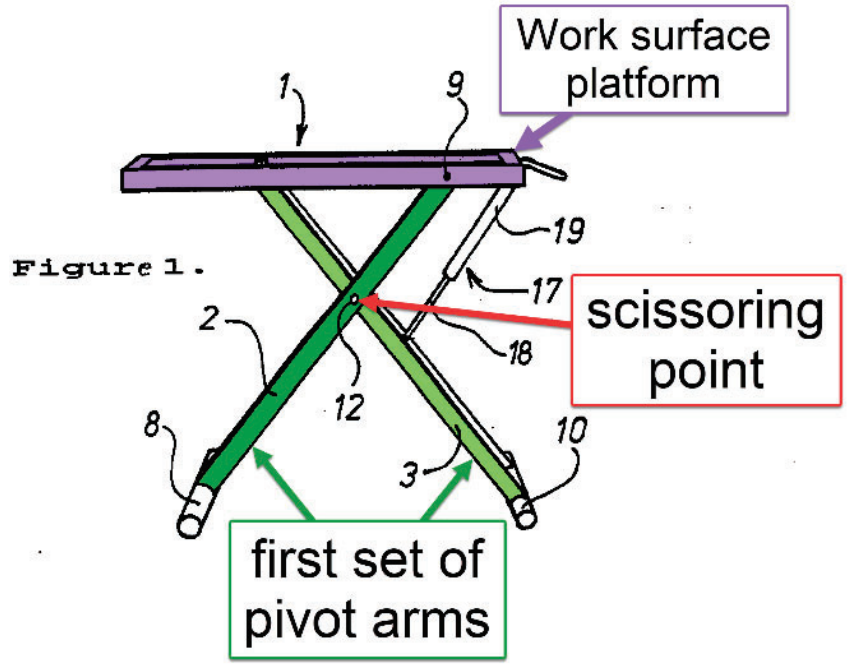

[54]

As shown above, Lindahl has a first set of pivot arms, items 2 and 3 above.

[54] Lindahl Figure 1, annotated

"Figures 1 and 2 illustrate the inventive stand. The stand includes a frame-like part 1 which is ***carried by two leg members 2, 3****. … **The two leg members 2, 3**, i.e. the pairs of bars 4, 5; 6, 7* ***are mutually connected by means of a hinge means or pivot in the form of a transverse rod 12****, which extends through the bars approximately midway therealong the rods, preferably at a location which is slightly above centre.* ***This enables the two ends of respective pairs of bars 4, 5; 6, 7 to be moved towards and away from each other in a scissor-like fashion and therewith move the frame-like part 1 vertically.****"* (Lindahl 3:1-3, 11-20, emphasis added)

"The present invention relates to a table stand for use preferably in caravans and motorhomes, wherein the top of the stand is provided with a frame-like part on which a tabletop is intended to be placed and which is ***adjustable in the height direction so that the tabletop can be adjusted vertically to different positions****." Lindhal, Abstract*

As shown in the citations above, the Lindahl mechanism has a first set of pivot arms.

Yamamoto also discloses a first set of pivot arms. For example, the pivots arms and scissoring pivot point are shown below:

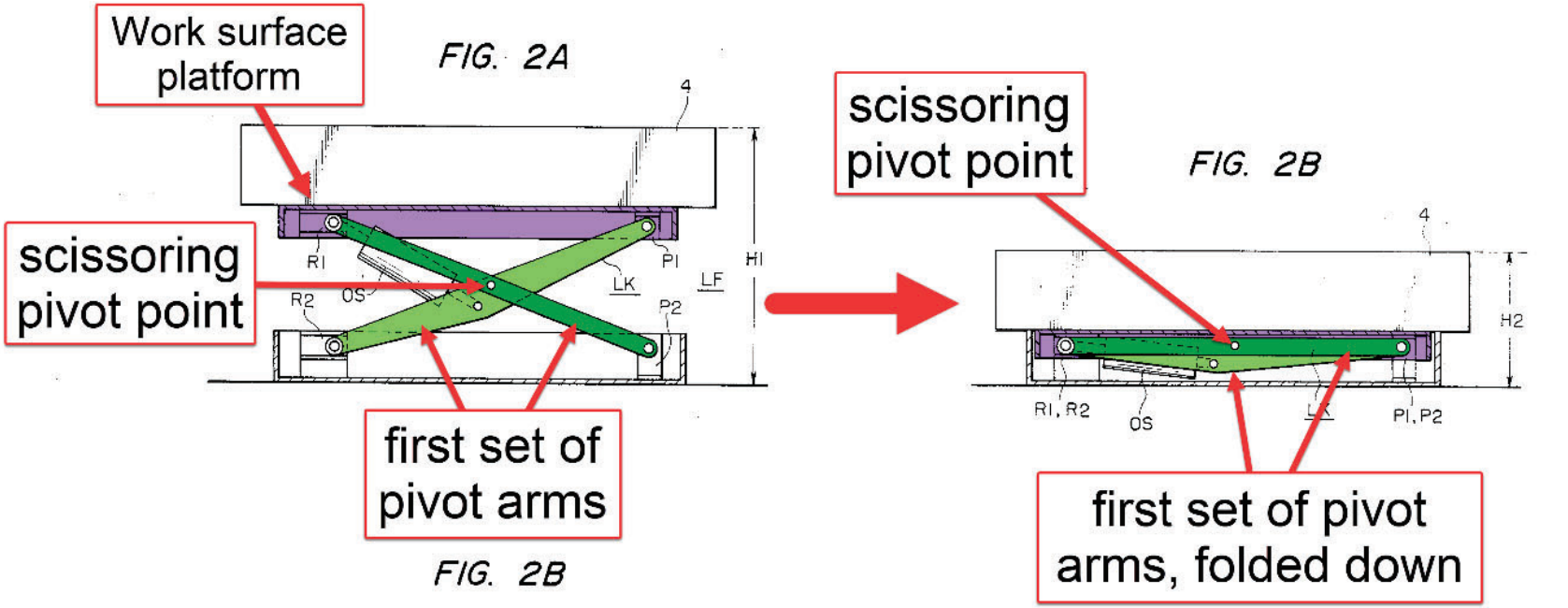

[55]

"FIG. 2 illustrates the arrangement of such a mechanism for producing vertical movement.
The height of the fluidized bed, and hence the height of the tank 4, are freely adjustable by a lifter LF between a maximum height H1 and a minimum height H2. The lifter LF includes a link mechanism LK having bearings P1 and P2 fixed to ends thereof and rollers R1 and R2 on opposite ends thereof which are movable along a guide rail." Yamamoto 1:63-2:3

As shown above, Yamamoto discloses a first set of pivot arms.

4a1. a second set of pivot arms; and	**YES:** At least Lindahl discloses a second set of pivot arms.

[55] Yamamoto Figures 2A and 2B, combined and annotated

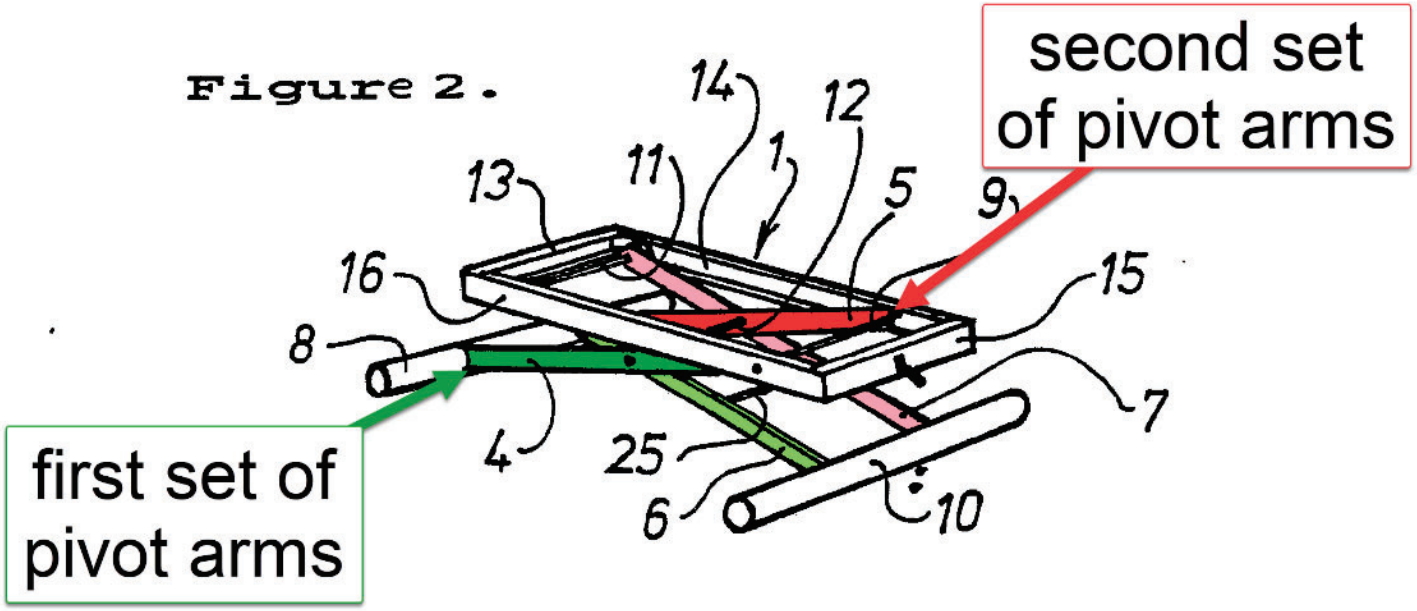

[56]

"…The pairs of bars 4, 5; 6, 7 are mutually connected by means of a hinge means or pivot in the form of a transverse rod 12, which extends through the bars approximately midway therealong the rods, preferably at a location which is slightly above centre. This enables the two ends of respective pairs of bars 4, 5; 6, 7 to be moved towards and away from each other in a scissor-like fashion and therewith move the frame-like part 1 vertically." (Lindahl 3:12-20)

As shown above Lindahl has a first and a second set of pivot arms. A POSITA will understand that this is a scissor lift mechanism of typical and ordinary design. A POSITA will further understand and be familiar with the fact that scissor lift mechanisms such as a common scissor lift machine or even this small table as disclosed by Lindahl are commonly built with a pair of scissoring links. This provides lateral stability to the machine over what would be typical of a single set of scissoring links.

4a2. an element that connects the first set of pivot arms to the second set of pivot arms.	**YES:** Lindahl discloses an element that connects the first set of pivot arms to the second set of pivot arms.

[56] Lindahl Figure 2, annotated

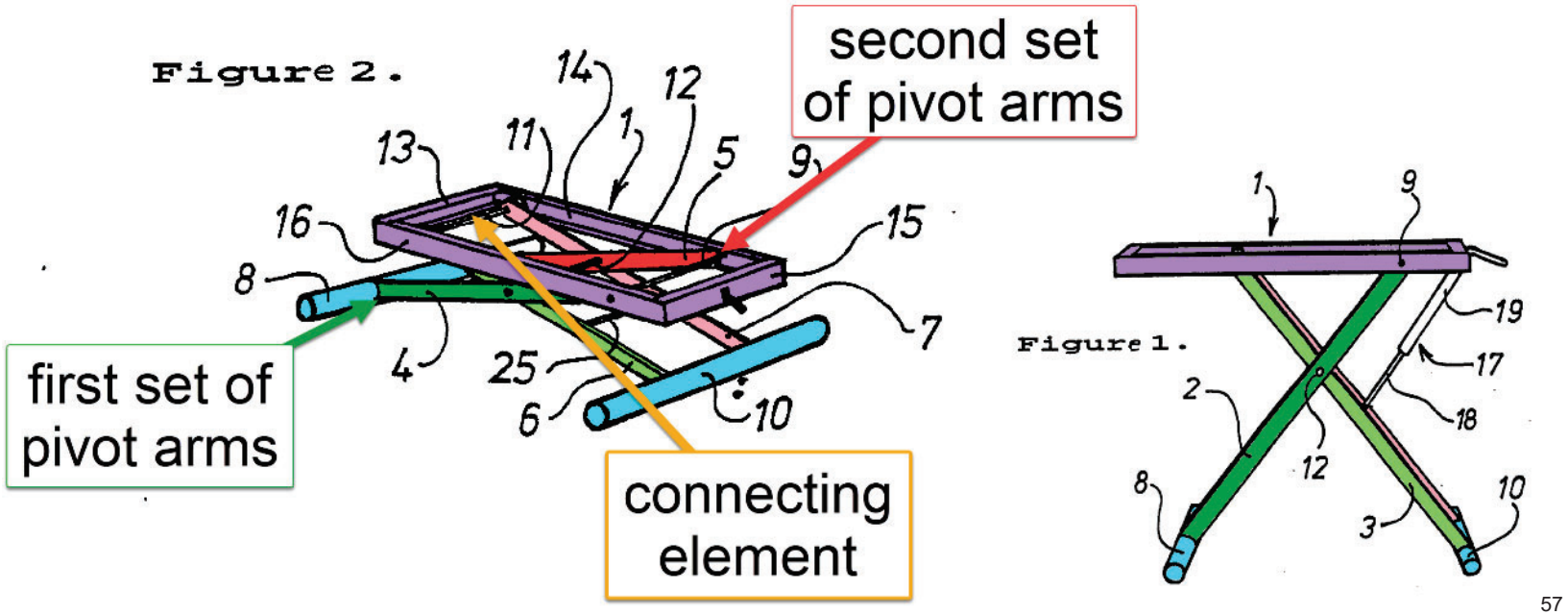

[57]

"…The pairs of bars 4, 5; 6, 7 are mutually connected by means of a hinge means or pivot in the form of a transverse rod 12, which extends through the bars approximately midway therealong the rods, preferably at a location which is slightly above centre. This enables the two ends of respective pairs of bars 4, 5; 6, 7 to be moved towards and away from each other in a scissor-like fashion and therewith move the frame-like part 1 vertically." Lindahl 3:12-20

"Each leg member 2, 3 includes two substantially parallel rods or bars 4, 5; 6, 7, wherein the two bars of each pair of bars are spaced from one another and are connected together at both ends thereof by means of a respective transverse rod 8, 9; 10, 11; wherein the lowermost transverse rods 8; 10 function to support the stand against the underlying support surface …" Lindahl 3:3-10

As shown above, Lindahl discloses multiple elements that connects the first set of pivot arms to the second set of pivot arms. For example, transverse rod 11 connects the first and second set of pivot arms to each other. Further, transverse rod 12 extends between the sets of pivot arms, connecting them. Further the top frame (item 1) and associated pivots also connect the first and second scissor linkages to each other. Further still, the transverse rods 8, and 10 of Lindahl connect the first set of pivot arms to the second set of pivot arms. A POSITA will understand that this is typical and ordinary design for scissor lift mechanisms.

[57] Lindahl Figures 1 and 2, combined and annotated

5P. The desktop workspace of claim 1,	**YES:** As shown above, Lindahl in view of Yamamoto, and in further view of HJ Zottel discloses the desktop workspace of claim 1.
5a. wherein the work surface platform forms an upper work surface, and	**YES:** Both Lindahl and Yamamoto disclose that the work surface platform forms an upper work surface.

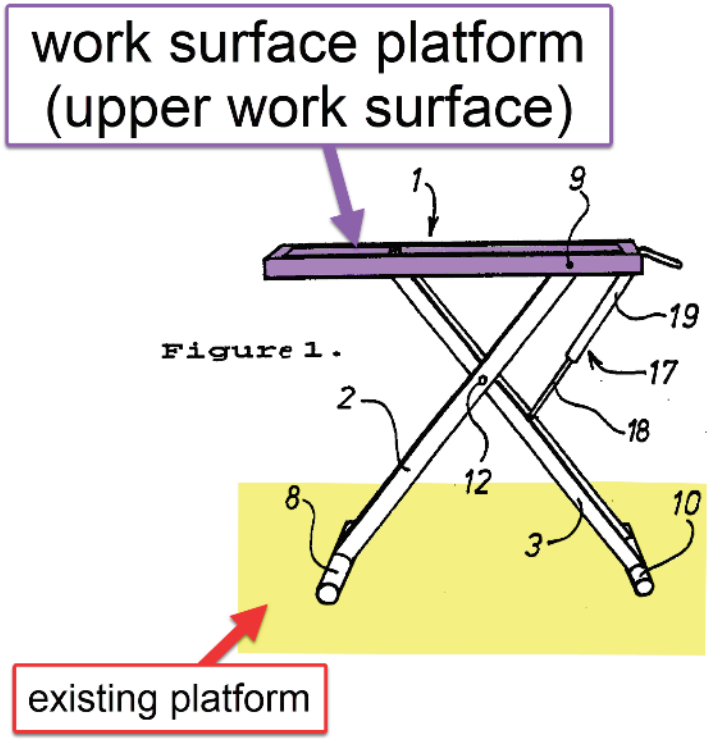

[58]

"The present invention relates to a table stand intended for use preferably in caravans and motorhomes, wherein the stand supports at the top thereof a frame-like part on which a tabletop is intended to be placed… Firstly the table is intended for use as a conventional dining table…" Lindahl 1:3-6, 13-14
"The stand includes a frame-like part 1 which is carried by two leg members 2, 3." Lindahl 3:1-3

[58] Lindahl Figure 1, annotated

"Each leg member 2, 3 includes two substantially parallel rods or bars 4, 5; 6, 7, wherein the two bars of each pair of bars are spaced from one another and are connected together at both ends thereof by means of a respective transverse rod 8, 9; 10, 11, wherein the lowermost transverse rods 8; 10 function to support the stand against the underlying support surface…" Lindahl 3:3-10

As shown above Lindahl is a table which has a work surface platform (i.e. the table top). Further, there is an existing platform that Lindahl is set on. Like essentially ALL tables, the work surface platform is positioned above the floor, and is therefore "upper." This is the basic form and function of a table in the first place. Even if it is argued that Lindahl shows a frame but the figures do not show the upper work surface per se, the above citation makes it clear that, "a tabletop is intended to be placed" on the frame member of Lindahl which itself is part of the work surface platform and is a upper work surface. Yamamoto meets this limitation as well as shown below:

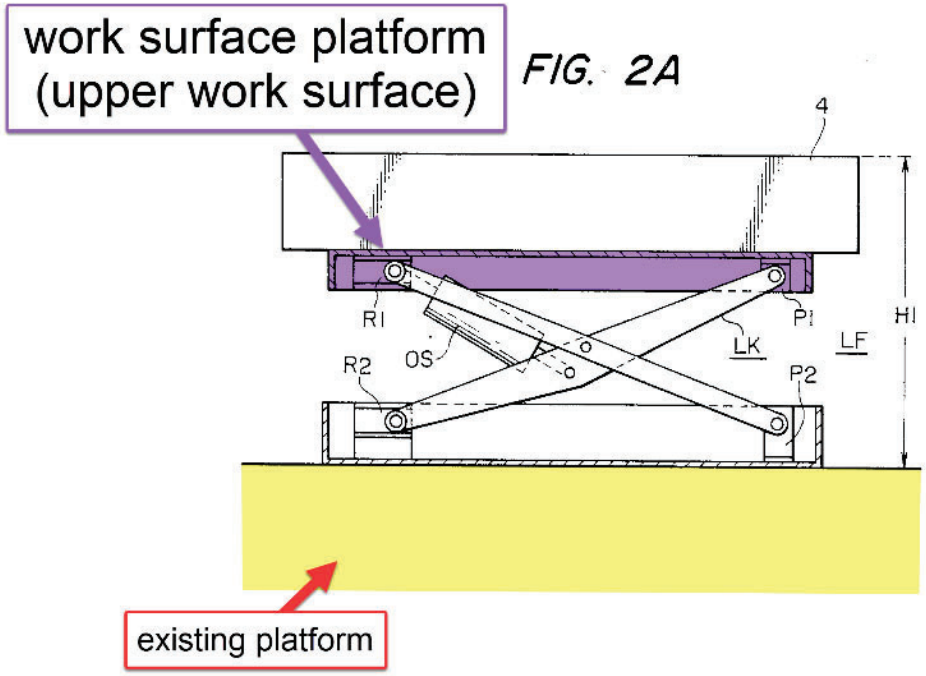

[59]

"The conventional fluidized bed has a fixed height. However, there has been a demand for a fluidized bed having an adjustable height, specifically, one in which the height of the bed above the floor can be made as small as possible for ease in transferring a patient onto the bed or when a patient gets onto or off the bed, and placed at a suitable height when the patient is lying on the bed for administering treatment to the patient." Yamamoto 1:53-60

[59] Yamamoto Figure 2A, annotated

As shown above Yamamoto is a table which has a work surface platform (i.e. the table top). Further, there is an existing platform that Yamamoto is set on. Like essentially ALL tables, the work surface platform is positioned above the floor, and is therefore "upper." This is the basic form and function of a table in the first place. Thus, both Lindahl and Yamamoto demonstrate that their respective work surface platforms form upper work surfaces.	
5b. wherein the gas spring is completely covered by a profile of the work surface platform when viewed from above the upper work surface relative to the base, the profile of the work surface platform being defined by an outer perimeter of the upper work surface.	**YES:** Both Lindahl and Yamamoto disclose that the gas spring (or piston cylinder device) is completely covered by a profile of the work surface platform when viewed from above the work surface relative to the base, the profile of the work surface platform being defined by an outer perimeter of the upper work surface.

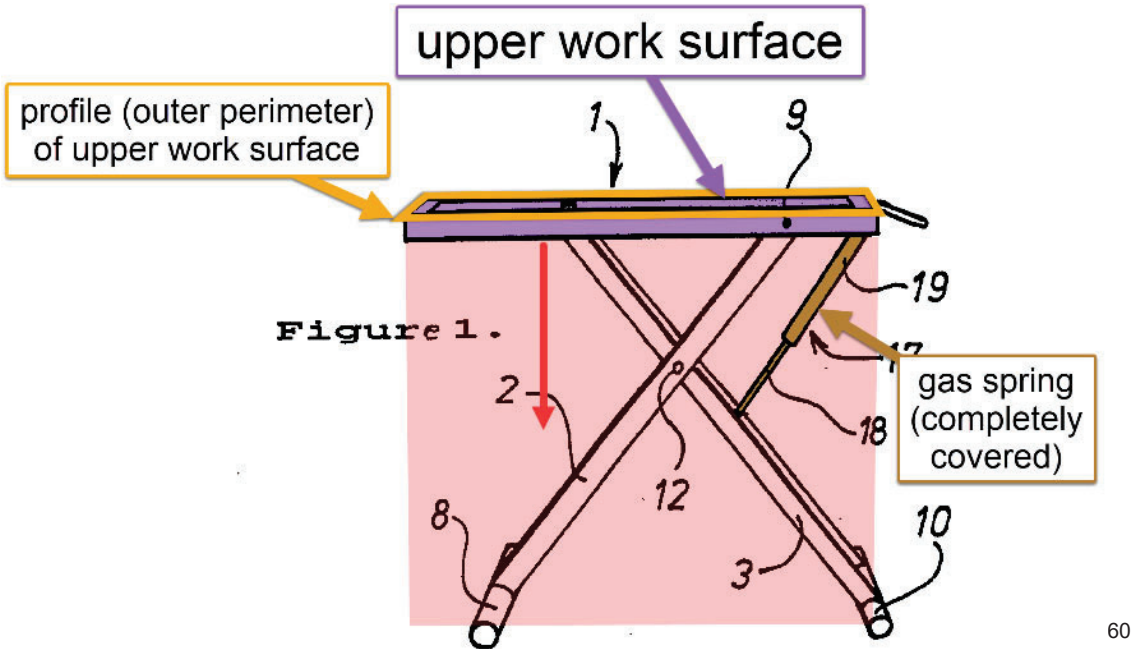

[60]

"The present invention relates to a table stand intended for use preferably in caravans and motorhomes, wherein the stand supports at the top thereof a frame-like part on which a tabletop is intended to be placed… Firstly the table is intended for use as a conventional dining table…" Lindahl 1:3-6, 13-14

[60] Lindal Figure 1, annotated

"An essential feature of the invention is that a blockable gas-spring 17, or piston-cylinder device is provided for enabling the position of the frame-like part 1 to be adjusted vertically in a smooth continuous fashion, both in an upward and in a downward direction." Lindahl 4:5-9

As shown above and as discussed previously, Lindahl discloses an upper work surface and a gas spring. Further, the profile that is defined as the outer perimeter of the upper work surface is larger than and completely covers the gas spring below. Even if it is argued that Lindahl shows a frame but the figures do not show the upper work surface per se, the above citation makes it clear that, "a tabletop is intended to be placed" on the frame member of Lindahl which itself is part of the work surface platform and is a upper work surface. In order to avoid creating pinch points, a POSITA will understand that the table top that is added to the upper frame will be at least as broad as the frame that supports it.

Similarly, Yamamoto discloses the same limitation. As discussed previously, Yamamoto uses a hydraulic cylinder which is a different type of piston cylinder actuator. However, as discussed previously, a POSITA would understand that from a design point of view, a gas spring can be installed in place of a hydraulic cylinder. The two devices are different in their behavior and certain applications may show that one is favorable over the other. Nevertheless, both a gas spring and a hydraulic cylinder a piston-cylinder devices and both can exert outward forces by extending under pressure. Thus, supposing that the hydraulic cylinder of Yamamoto was to be replaced with a gas spring to assist in the lift of an otherwise manually lifted table, such a substitution would be arranged such that the gas spring is completely covered by a profile of the work surface platform when viewed from above.

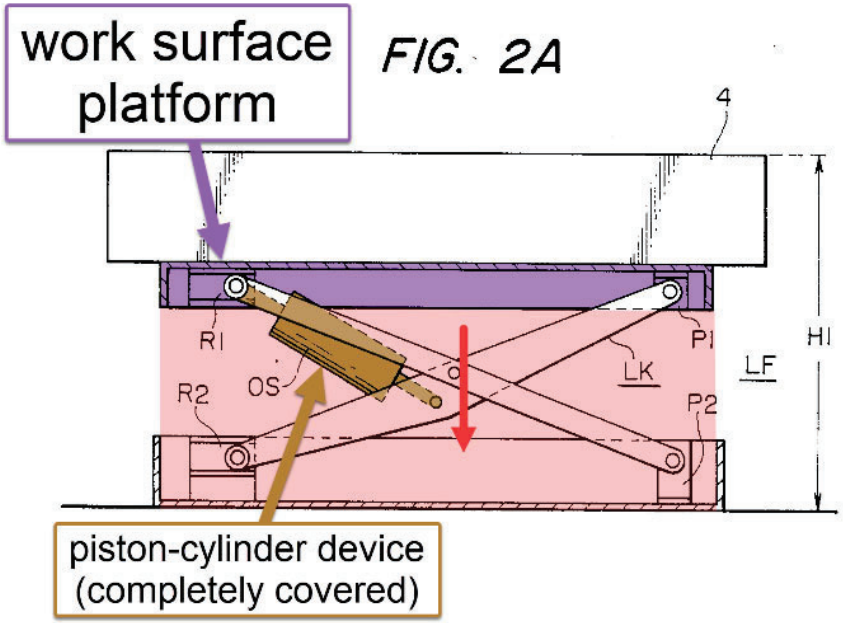

[61]

"The conventional fluidized bed has a fixed height. However, there has been a demand for a fluidized bed having an adjustable height, specifically, one in which the height of the bed above the floor can be made as small as possible for ease in transferring a patient onto the bed or when a patient gets onto or off the bed, and placed at a suitable height when the patient is lying on the bed for administering treatment to the patient." Yamamoto 1:53-60

"The lifter LF includes a link mechanism LK having bearings P1 and P2 fixed to ends thereof and rollers R1 and R2 on opposite ends thereof which are movable along a guide rail. A hydraulic cylinder OS serves as a vertical drive unit for extending and retracting the link mechanism LK." Yamamoto 1:68-2:5

As shown above, Yamamoto has a hydraulic cylinder OS which is completely covered by the profile of the work surface platform when viewed from above. As discussed, a POSITA would understand that the hydraulic cylinder could be replaced by a gas spring, in which case, it would also be compeltely covered by the profile of the work surface platform when viewed from above.

[61] Yamamoto Figure 2A, annotated

6P. The desktop workspace of claim 1,	**YES:** As shown above, Lindahl in view of Yamamoto, and in further view of HJ Zottel discloses the desktop workspace of claim 1.
6a. wherein the gas spring is a first spring,	**YES:** Lindahl discloses a gas spring that is a first spring.

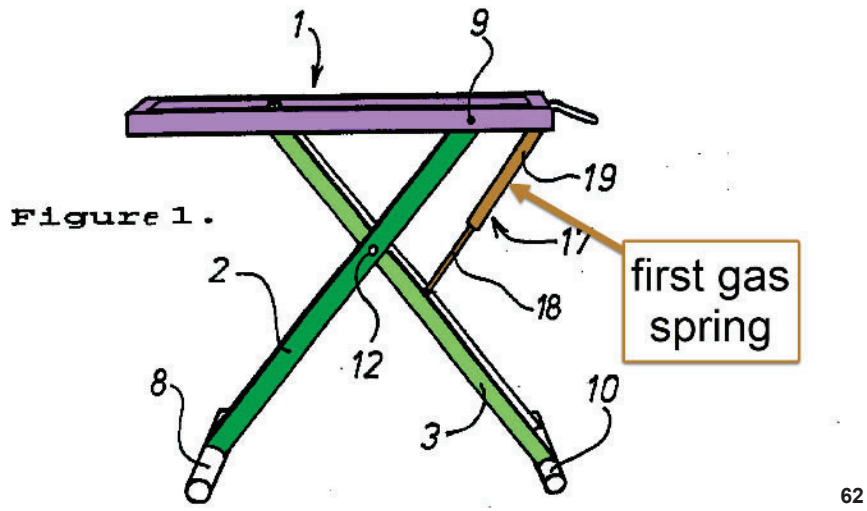

[62]

"An essential feature of the invention is that a blockable gas-spring 17, or piston-cylinder device is provided for enabling the position of the frame-like part 1 to be adjusted vertically in a smooth continuous fashion, both in an upward and in a downward direction. The gas-spring includes a bottom part 18 which is pivotally connected to the leg member 3 beneath the pivot rod 12, and an upper part 19 which is pivotally connected to the transverse frame-bar 15 on the same side of a vertical plane passing through the rod 12 as the lower part 18 (see also Figures 3, 4)." Lindahl 4:5-15

As shown above, Lindahl discloses a gas spring that is a first spring.

6b. the desktop workspace comprising a pair of springs attached to the height adjustment mechanism to assist in the elevation of the work surface platform, the pair of springs including the first spring and a second spring.	**YES:** A POSITA would recognize the addition of a second gas spring as an ordinary design choice such that the desktop workspace comprises a pair of springs attached to the height adjustment mechanism to assist in the elevation of the work surface platform, the pair of spring including the first spring and a second spring.

[62] Lindahl Figure 1, annotated

	In addition to this, Lindahl in view of Yamamoto, and in further view of Clark and other references such as CN203934825 to Zhang discloses a second gas spring such that the desktop workspace comprises a pair of springs attached to the height adjustment mechanism to assist in the elevation of the work surface platform, the pair of springs including the first spring and a second spring.

A POSITA would recognize that having multiple actuators for lifting the scissor lift linkage is well-known and customary. Further, a POSITA will recognize that when a second gas spring is added, the pair of gas springs can be arranged such that they are much closer to their respective set of pivot arms. This allows the scissor lift mechanism to be much more structurally efficient. For example, Lindahl's gas spring is attached in the center of an arm pivot bar (transverse rod 25) as previously discussed. An actuator connection in the middle of a bar such as this can lead to much more bending loads and stress. In contrast to this, it is well-known and understood that shorter connection distances lead to significantly less bending stress. A second gas spring allows the connection distances to be shorter such that the arm pivots primarily experience shear stress as opposed to bending stress. Further, the second gas spring allows this to be accomplished without compromising overall balance of the mechanism as a whole. A POSITA familiar with the principles of linkage design (such as a scissor lift linkage) will understand these principles and see this motivation to provide a second gas spring as an optional design choice.

Further still, a POSITA will also be motivated to use a pair of gas springs as this increases the amount of lifting assistance that is provided without detracting from the overall compactness of the stowed lift assembly. A POSITA will recognize that were a single larger locking gas spring to be used instead of two locking gas springs the larger gas spring will prevent the scissor linkage from collapsing to the same extent as it could with a smaller diameter actuator.

In addition to this, a POSITA could look to other pieces of prior art that make this optional design choice. For example, US 3,282,566 to Clarke discloses a scissor lift platform with as many as three fluid power cylinders acting in parallel.

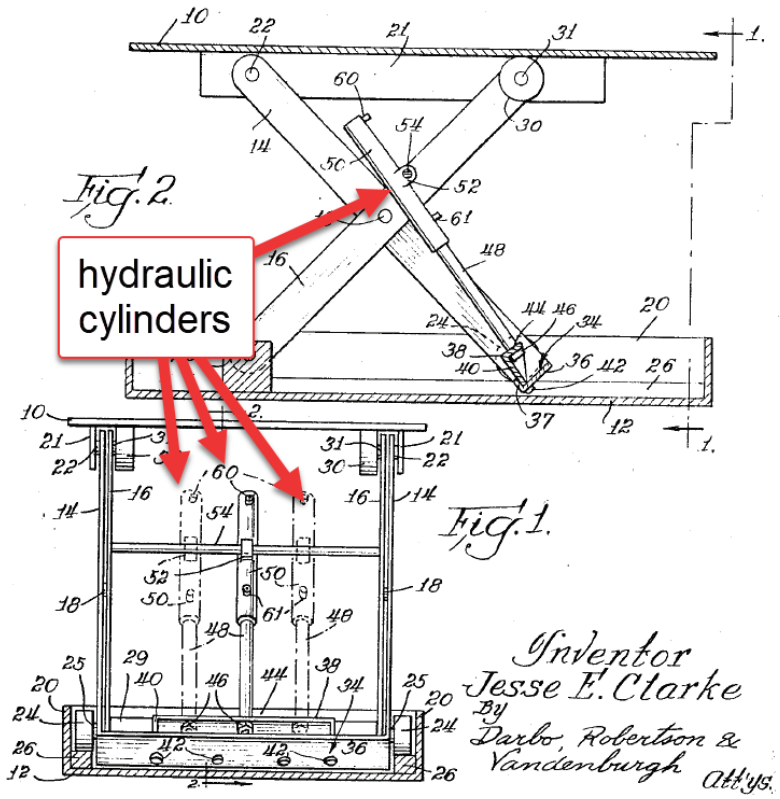

"To supply air or fluid pressure, each cylinder 50 is provided with an inlet 60 near its outer end to which some suitable connection (not shown) is made." US 3,282,566 to Clarke 2:67-69
"In this invention, a lift table with a completely closed scissor linkage is raised by one or more hydraulic cylinders, depending on the lifting force necessary." US 3,282,566 to Clarke 1:56-59

Further, a POSITA could also look to CN203934825 to Zhang (aka Zhang) circa 2014, which discloses the use of a pair of gas springs to facilitate the movement of a scissoring linkage style platform. The gas springs are locking gas springs and are tied together through the use of Bowden cables in a manner well known and in accordance with typical engineering practice.

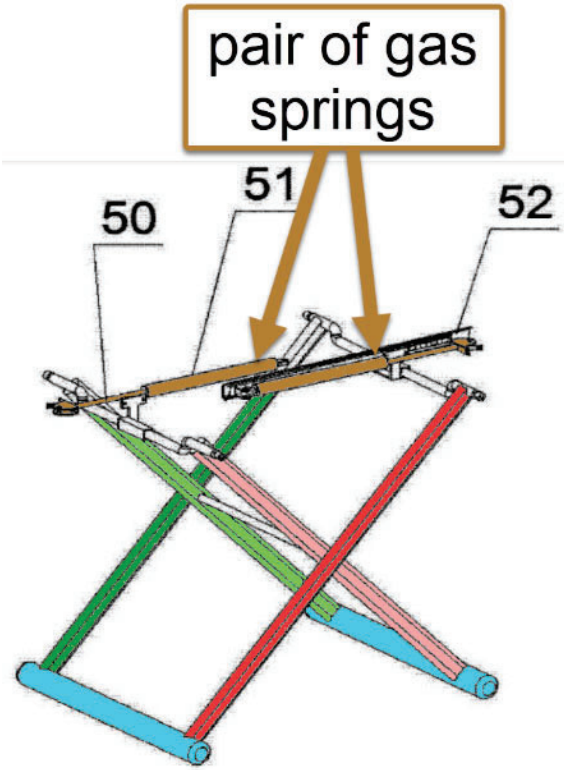

[Image]

Figure 5

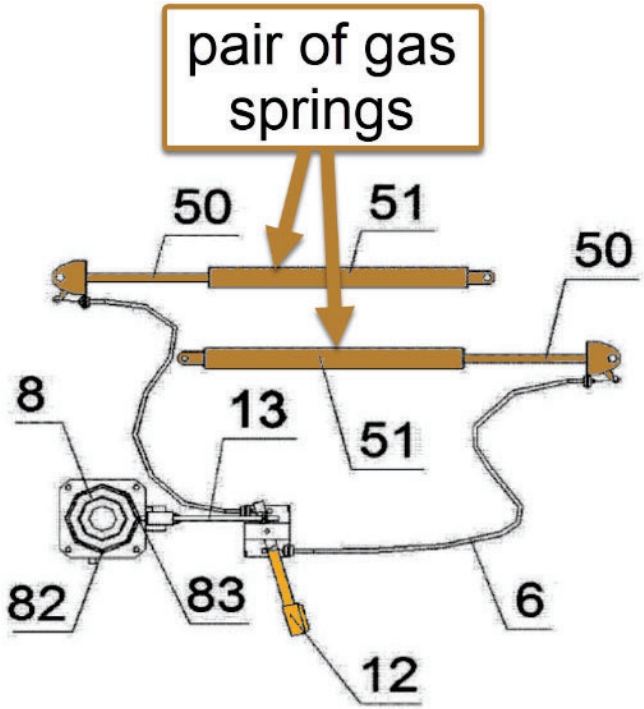

[Image]

Figure 8

[63]

"The two air struts are controlled by a pull switch 6." Zhang, Abstract

"The positive effect of this utility model is that the height adjustable table using this structure can control the opening angle of the "X" – shaped cross movable metal feet through the joint action of horizontal guide rails, air support rods, pull switches and other components to adjust the height of the desktop and perform height positioning, making it very convenient to adjust the desktop height." Zhang [0009]

[63] Zhang Figure 5 and 8 (annotated)

As shown above, Zhang discloses the use of a pair of locking gas springs to adjustably set the height of a desktop work surface. Even without the disclosure of Zhang or Clarke, a POSITA would readily be aware of and familiar with the optional design choice of adding a second gas spring to Lindahl.	
7. The desktop workspace of claim 1,	**YES:** As shown above, Lindahl in view of Yamamoto, and in further view of HJ Zottel discloses the desktop workspace of claim 1.
7a. wherein the sliding mechanism is a first sliding mechanism, **7b.** the desktop workspace further comprising a second sliding mechanism,	**YES:** Lindahl in view of Yamamoto discloses that the sliding mechanism is a first sliding mechanism. Further this combination discloses that there is a second sliding mechanism.

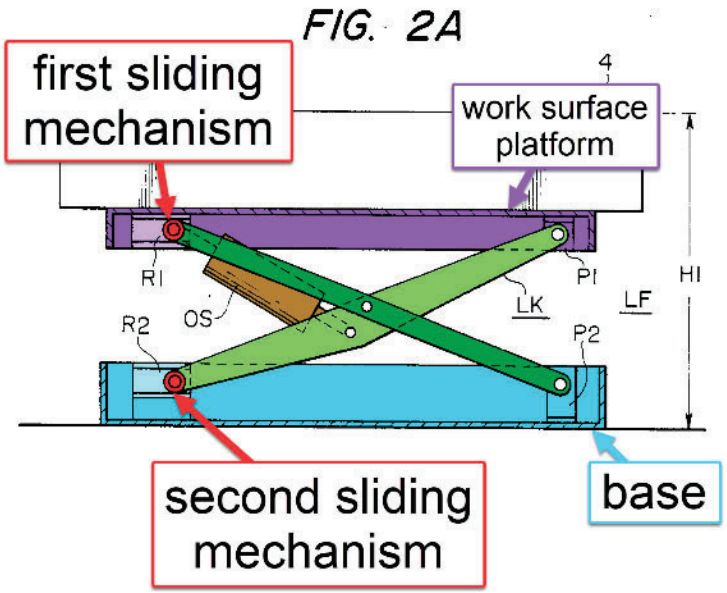

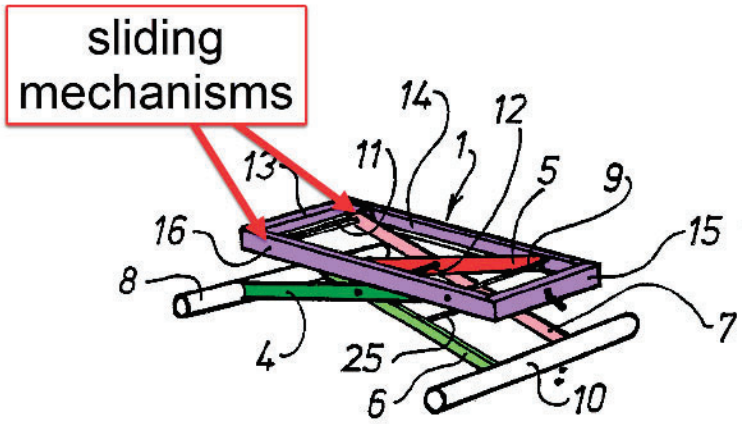

[64]

"The one rod 9 is pivotally mounted in the bars 14, 15, whereas the other ***transverse rod 11 is provided at both ends with suitable means for sliding in the U-shaped part of the bars*** *in order to achieve the aforesaid scissor-like movement of the leg members." Lindahl 3:31-4:3 (emphasis added)*

[64] Yamamoto Figure 2A and Lindahl Figure 2, combined and annotated

"The lifter LF includes a link mechanism LK having bearing P1 and P2 fixed to ends thereof and rollers R1 and R2 on opposite ends thereof which are movable along a guide rail" Yamamoto 1:68-2:3

As shown above, both Lindahl and Yamamoto have a first sliding mechanism, which is what allows the top portion of the scissor links to translate relative to the work surface platform. In addition to this, Yamamoto discloses a second sliding mechanism that is operable between the pivot arms and the base. Again, this is typical scissor linkage design that any POSITA would readily understand is ubiquitous.

7c. wherein either the first sliding mechanism or the second sliding mechanism is attached or slides along the work surface platform, **7d.** and the other of the first sliding mechanism and the second sliding mechanism is attached to or slides along the base.	**YES: YES:** Lindahl in view of Yamamoto discloses that either the first or the second sliding mechanism is attached or slides along the work surface platform. Further, the other first and second sliding mechanism is attached to or slides along the base.

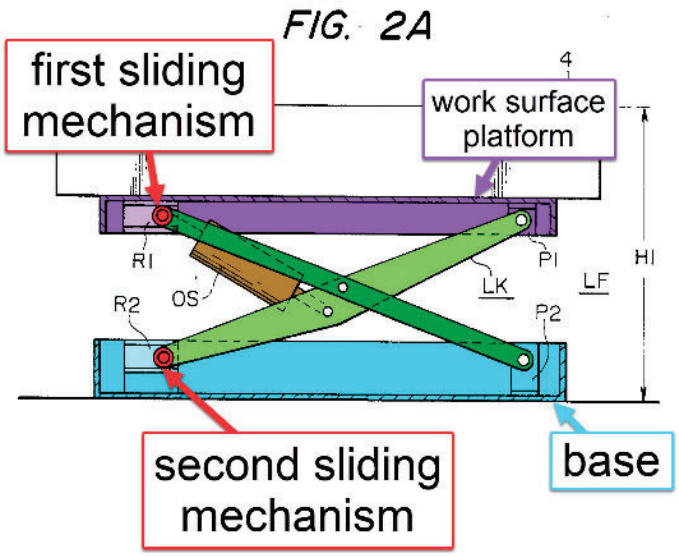

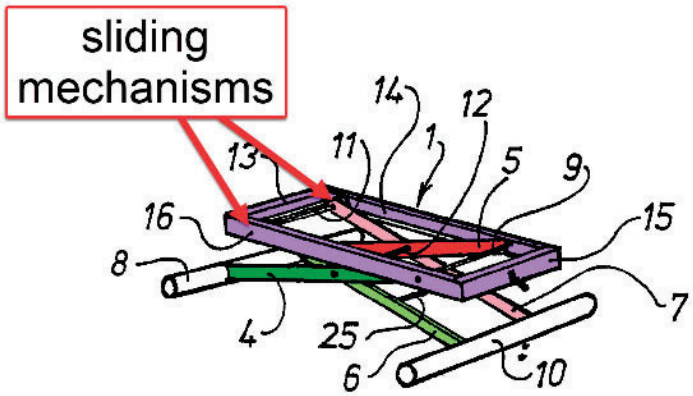

[65]

"The one rod 9 is pivotally mounted in the bars 14, 15, whereas the other ***transverse rod 11 is provided at both ends with suitable means for sliding in the U-shaped part of the bars*** *in order to achieve the aforesaid scissor-like movement of the leg members." Lindahl 3:31-4:3 (emphasis added)*

[65] Yamamoto Figure 2A and Lindahl Figure 2, combined and annotated

"The lifter LF includes a link mechanism LK having bearing P1 and P2 fixed to ends thereof and rollers R1 and R2 on opposite ends thereof which are movable along a guide rail" Yamamoto 1:68-2:3 As shown above, both Lindahl and Yamamoto show that the first sliding mechanism(s) are attached to or slide along the work surface platform. Further, Yamamoto has a second sliding mechanism (item R2 as shown above) that is attached to or slides along the base. As discussed previously, a POISTA would be motivated to combine the base of Yamamoto with Lindahl and as such, the combination will have the first and second sliding mechanisms of Yamamoto with one being at the work surface platform and the other being at the base.	
8P. The desktop workspace of claim 1,	**YES:** As shown above, Lindahl in view of Yamamoto, and in further view of HJ Zottel discloses the desktop workspace of claim 1.
8a. wherein the scissoring motion when raising and lowering the work surface platform to various heights of the height adjustment mechanism moves the work surface platform in a straight vertical direction relative to the base.	**YES:** Yamamoto discloses that the scissoring motion when raising and lowering the work surface platform to various heights of the height adjustment mechanism moves the work surface platform in a straight vertical line relative to the base.

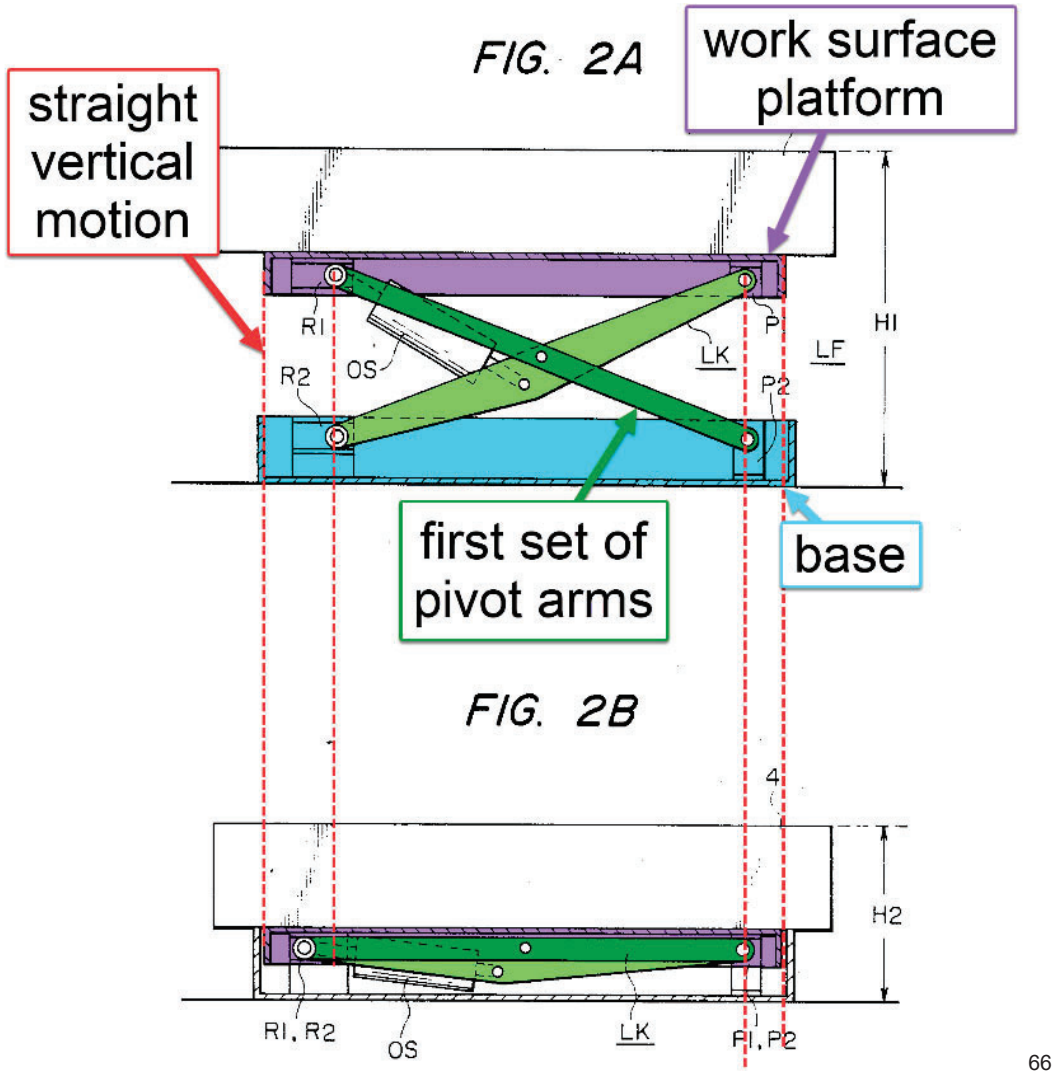

[66]

"To meet this demand, it has been proposed to combine a lifter with the bed for adjusting the height of the bed. FIG. 2 illustrates the arrangement of such a mechanism for producing vertical movement. The height of the fluidized bed, and hence the height of the tank 4, are freely

[66] Yamamoto Figures 2A and 2B, combined and annotated

adjustable by a lifter LF between a maximum height H1 and a minimum height H2. The lifter LF includes a link mechanism LK having bearings P1 and P2 fixed to the ends thereof and rollers R1 and R2 on opposite ends thereof which are movable along a guide rail. A hydraulic cylinder OS serves as a vertical drive unit for extending and retracting the link mechanism LK. Vertical movement of such a vertically movable fluidized bed with a patient thereon while the beads 5 are in a flowing condition, however, results in the danger of causing the patient to move unnecessarily on the bed." Yamamoto 1:61-2:9 As shown above, the scissor mechanism of Yamamoto moves the work surface platform in a straight vertical line relative to the base. This is a property typical of scissor lifting mechanisms generally as a POSITA would understand. Thus, the Lindahl mechanism also exhibits straight-line vertical motion. That the mechanism is adjustable to various heights has already been shown. This feature is afforded by the locking gas spring in Lindahl and the hydraulic cylinder of Yamamoto.	
9P. The desktop workspace of claim 1,	**YES:** As shown above, Lindahl in view of Yamamoto, and in further view of HJ Zottel discloses the desktop workspace of claim 1.
9a. wherein the slidable tray protrudes out, down, and parallel to the work surface platform in the extended position.	**YES:** This combination shows that the slidable tray protrudes out, down, and parallel to the work surface platform in the extended position.

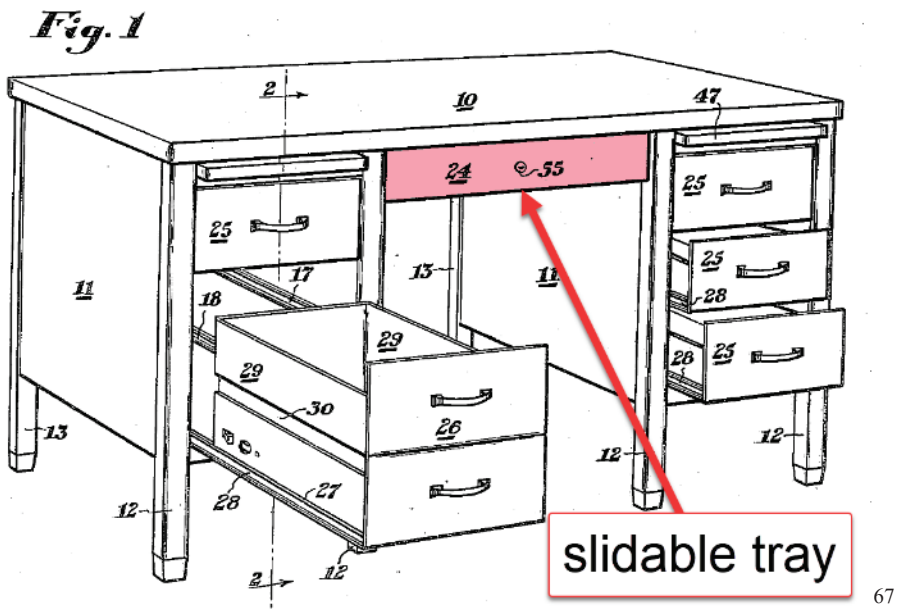

[67]

"The primary objects of the instant invention are to provide a desk having a plurality of box drawers and one or more vertical letter file drawers…" HJ Zottel 1:4-6

"The desk comprises a top 10 supported by drawer supporting pedestals 11 having front legs 12 and rear legs 13 attached thereto" HJ Zottel 1:47-50

"As best shown in Figure 1, the desk is provided with a center drawer 24 between the pedestals 11" HJ Zottel 2:9-11

HJ Zottel shows a slidable tray (drawer 24) which is one of an array of drawers that are integrated with the desk disclosed by HJ Zottel. The drawers of Figure 1 are shown in various state of being opened. Some of them are shown in a closed position, such as central drawer 24 and some of drawers 25. Others are shown in a partially open state such as two of the drawers 25 shown above. Still others such as drawer 26 is shown in a fully open state. Cumulatively, it is clear that the drawers are arranged in a parallel manner to the work surface platform (as demonstrated by the various states shown of open vs. closed drawers). At the same time all of the drawers are arranged strictly below the work surface platform. When any given drawer is pulled out, it will translate to a position that is protrusionally outward away from the work surface

[67] HJ Zottel Figure 1, annotated

platform, as drawer 26 is shown in Figure 1. Thus, when central drawer 24 is in the extended or open position, it will protrude out, down, and parallel to the work surface platform.	
10P. The desktop workspace of claim 1,	**YES:** As shown above, Lindahl in view of Yamamoto, and in further view of HJ Zottel discloses the desktop workspace of claim 1.
10a. wherein the gas spring is attached directly to the one of the set of pivot arms.	**YES:** Lindahl in view of Yamamoto discloses that the gas spring is attached directly to one of the sets of pivot arms.

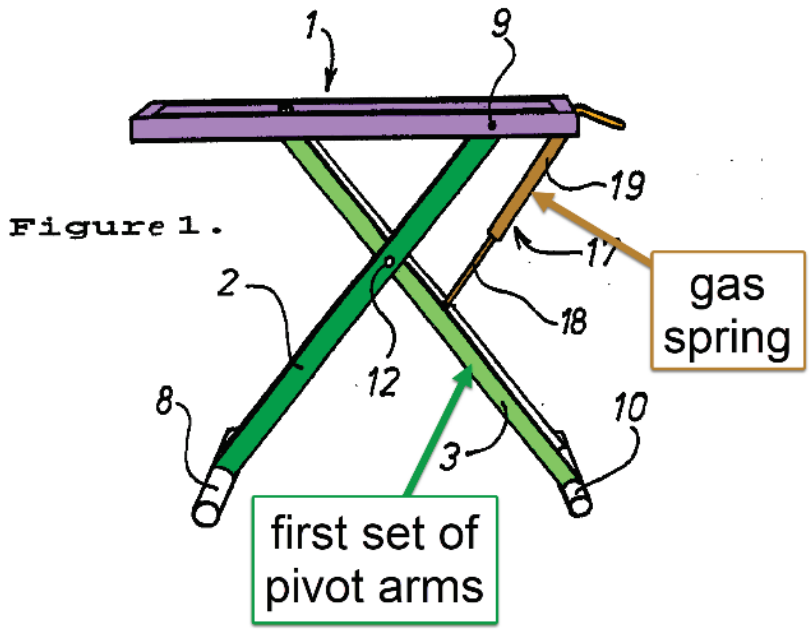

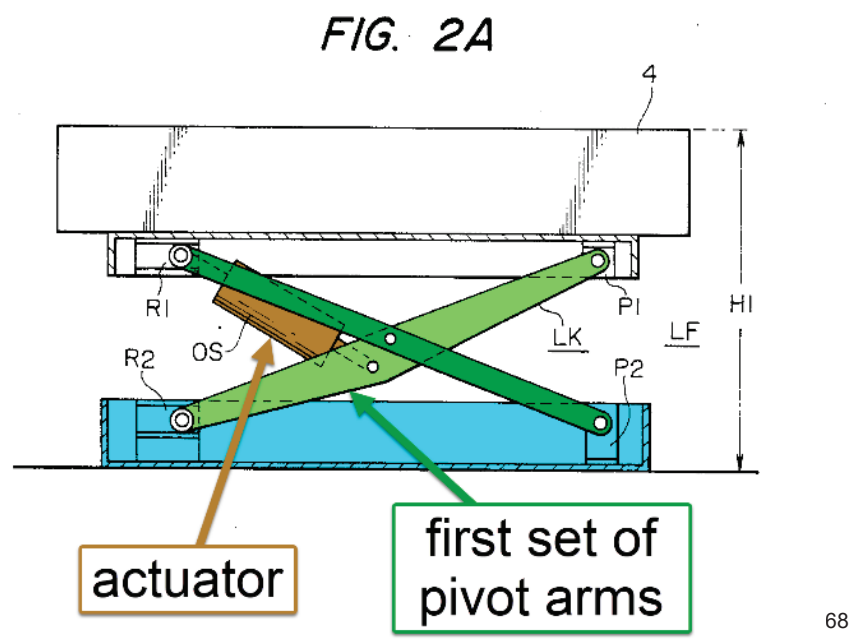

[68]

"The gas-spring includes a bottom part 18 which is pivotally connected to the leg member 3 beneath the pivot rod 12" Lindahl 4:10-12

As shown above, the gas spring is attached directly to one of the first set of pivot arms. It the gas spring has a bottom part 18 (the rod end) which is pivotally connected to leg member 3, which is one of the first set of pivot arms. Further, Yamamoto is shown above wherein the piston-cylinder style actuator is directly pivotally attached to one of the pivot arms.

12P. The desktop workspace of claim 1,	**YES:** As shown above, Lindahl in view of Yamamoto, and in further view of HJ Zottel discloses the desktop workspace of claim 1.

[68] Lindahl Figure 1 and Yamamoto Figure 2A, combined and annotated

12a. further comprising a height adjustment locking mechanism that holds the work surface platform at various vertical heights above the base.	**YES:** Lindal and Yamamoto disclose a height adjustment locking mechanism that holds the work surface platform at various vertical heights above the base.

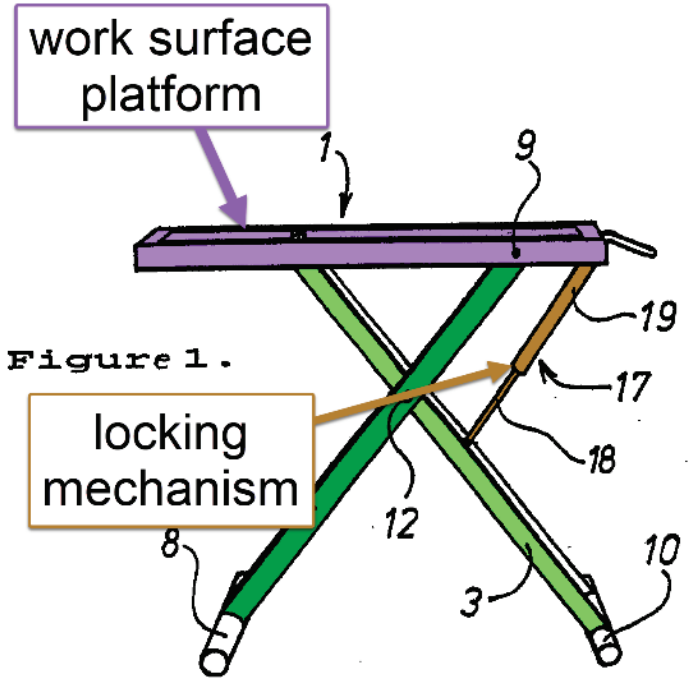

[69]

"The present invention relates to a table stand for use preferably in caravans and motorhomes, wherein the top of the stand is provided with a frame-like part on which a tabletop is intended to be placed and which is ***adjustable in the height direction so that the tabletop can be adjusted vertically to different positions.*** *" Lindhal, Abstract (emphasis added)*

"An essential feature of the invention is that a blockable gas-spring 17, or piston-cylinder device is provided for enabling the position of the frame-like part 1 to be adjusted vertically in a smooth continuous fashion, both in an upward and in a downward direction." Lindahl 4:5-9

As shown above Lindahl discloses the use of a locking gas spring to hold the work surface platform at various vertical heights above the base.

14P. The desktop workspace of claim 1,	**YES:** As shown above, Lindahl in view of Yamamoto, and in further view of HJ Zottel discloses the desktop workspace of claim 1.

[69] Lindahl Figure 1, annotated

14a. further comprising two sliders that connect the slidable tray to the work surface platform,	**YES:** Lindahl in view of Yamamoto and in further view of HJ Zottel discloses two sliders that connect the slidable try to the work surface platform.

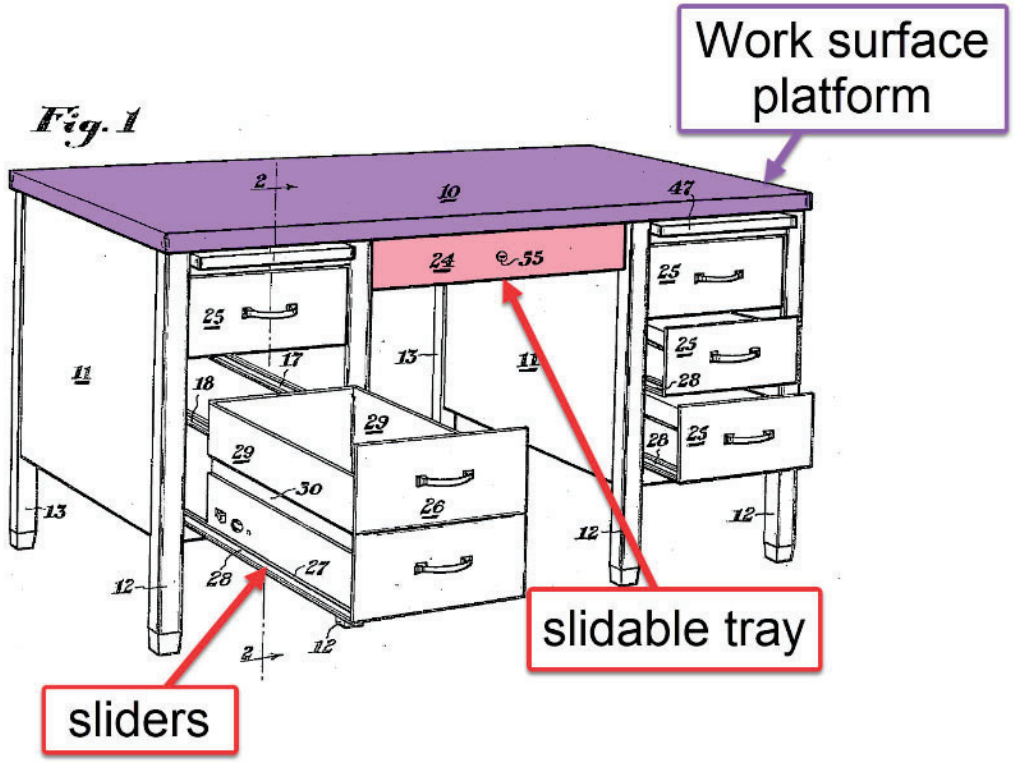

[70]

"As best shown in Figure 1, the desk is provided with a center drawer 24 between the pedestals 11" HJ Zottel 2:9-11

"The runners 28 of each drawer slidably engage a pair of drawer guides 16, 17 or 18 to thus slidably mount each drawer within a pedestal 11." HJ Zottel 2:17-20

As shown above, HJ Zottel discloses the use of two sliders that connect each drawer to the rest of the desk (i.e. runners 28). Specifically, HJ Zottel describes that each drawer slidably enages with a *pair* of guides as shown in the citation above. This is conistent with having a pair of

[70] HJ Zottel, Figure 1, annotated

sliders. Further, it is customary and typical to have a pair of sliders for a drawer (particularly if it is a side mount or top mount) as this provides for a more balanced drawer arrangment. As discussed previously, a POSITA will understand the ordinary permutations of drawer mounts, i.e. bottom mount, side, mount, and top mount. As discussed previously, when combining the teachings of HJ Zottel with the combination of Lindahl in view of Yamamoto, a POSITA would be motivated to use a top-mount drawer as that is the only structure available to mount a drawer to in this combination. Thus, a POSITA would be motivated to use sliders to connect the slidable tray to the work surface platform.

In addition to this, a POSITA may also consider other well-known teachings in the prior art such as that of Drabczyk which shows the use of two sliders that connect the slidable tray to the work surface platform as shown below:

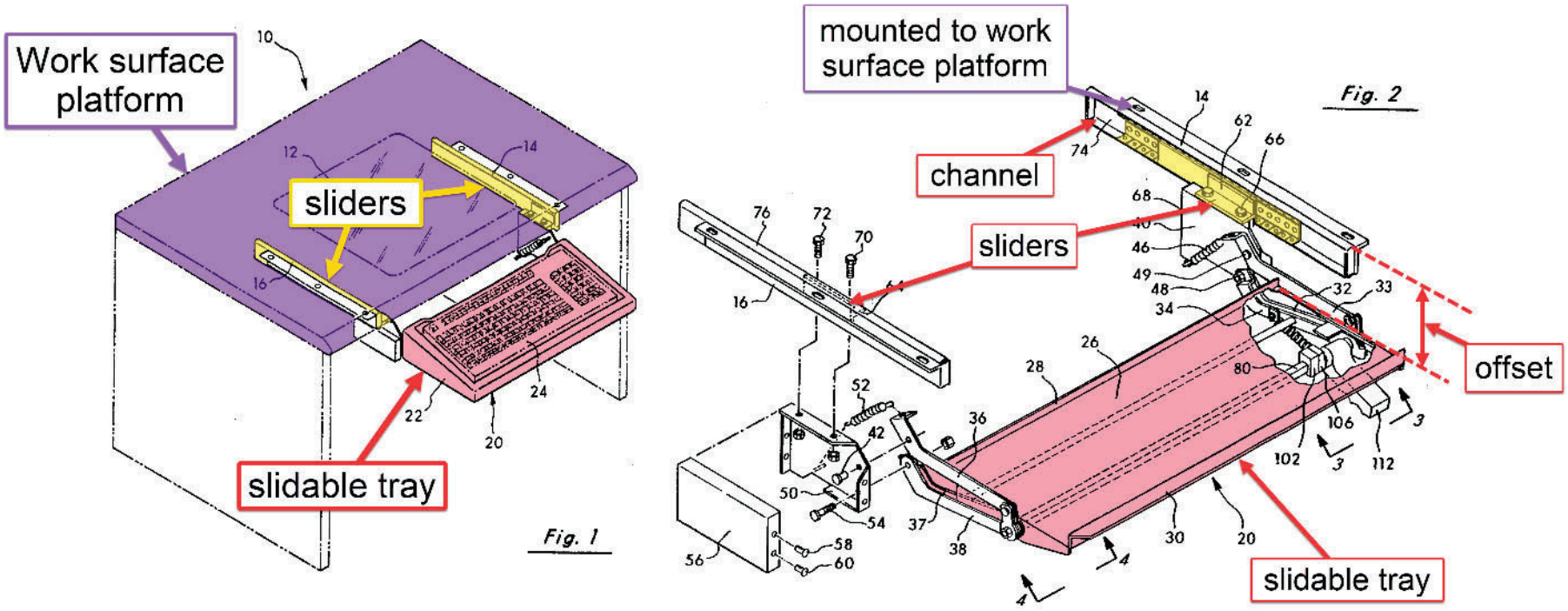

[71]

[71] Drabczyk Figures 1 and 2, combined and annotated

"Keyboard holder 20 is secured to workstation 10 to slide from an out of the way position beneath the top of workstation 10 to a working position as shown in FIG. 1. Keyboard holder 20, shown in FIG. 1, includes a molded plastic tray 22, which holds most types and sizes of keyboards 24." Drabczyk 3:36-41 *"Mounting plates 40, 42 are affixed to slide brackets 62, 64, respectively by bolts 66-72. Slide brackets 62, 64 slide within extendible tracks 74, 76 on mounting brackets 14, 16.* ***<u>The design and operation of slide brackets 62, 64 and mounting brackets 14, 16 are conventional in design and are not discussed in any further detail.</u>*** *Thus, support tray 26, along with keyboard tray 22 and keybaord 24 are movable from an out of the way position beneath the upper surface of workstation 10 to a working position shown in FIG. 1." Drabczyk 3:65-4:6 (emphasis added)* As shown above Drabcyzk discloses the use of two sliders (slide brackets 62, 64) which connect the slidable tray (keyboard holder 20 and molded plastic tray 22) to the work surface platform, i.e. the desk top. With or without the dislosure of Drabczyk, a POSITA would be motivated to include a top-mounted drawer in the typical and traditional style (i.e. with a pair of sliders) when combining the teachings of HJ Zottel with Lindahl in view of Yamamoto.	
14b. wherein the two sliders operate in parallel to facilitate selectively positioning the slidable tray between the stored position under the work surface platform and the extended position that is outward and lowered with respect to the work surface platform.	**YES:** Lindahl in view of Yamamoto and in further view of HJ Zottel discloses that the two sliders operate in parallel to facilitate selectively positioning the slidable tray between the stored position under the work surface platform and the extended position that is outward and lowered with respect to the work surface platform.

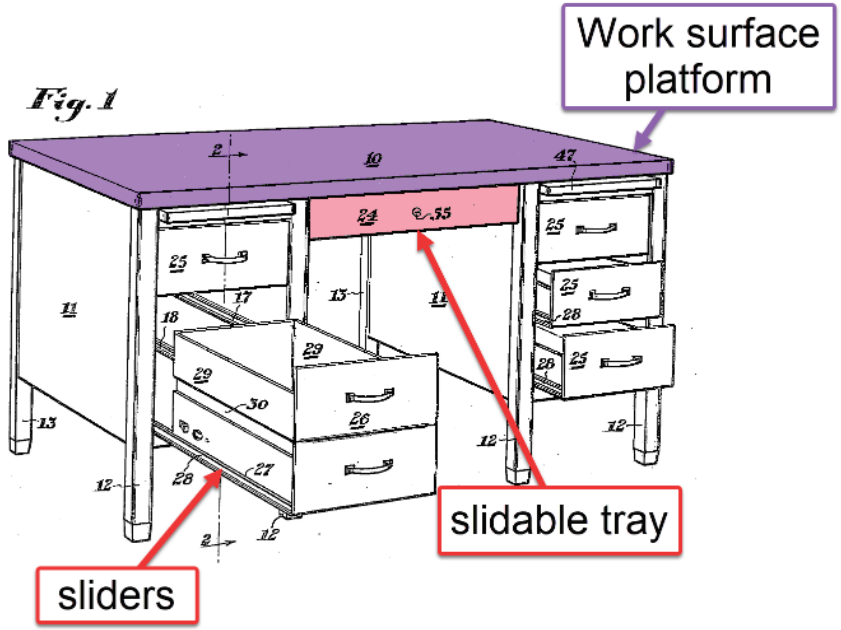

[72]

"As best shown in Figure 1, the desk is provided with a center drawer 24 between the pedestals 11" HJ Zottel 2:9-11

"The runners 28 of each drawer slidably engage a pair of drawer guides 16, 17 or 18 to thus slidably mount each drawer within a pedestal 11." HJ Zottel 2:17-20

As discussed previously, HJ Zottel discloses two sliders. Further, as is typical and customary, the two sliders operate in parallel. In fact, when the drawers of HJ Zottel are extended or retracted, each of the two sliders operate together. For example, each drawer of HJ Zottel can be placed in a stowed position (as drawer 24 is shown above) or in a opened position (such as drawer 26 shown above). Further as is typical of drawers in general, when extended the drawer is positioned outward and lowered with respect to the work surface platform.

Further still, a POSITA can look to prior art such as Drabczyk which also discloses the use of two sliders (as previously discussed) but also demonstrates that the sliders operate in parallel which facilitate positioning the tray in a stored position under the work surface or an extended position where it is spaced outward and lowered with respect to the work surface platform as shown below:

[72] HJ Zottel Figure 1, annotated

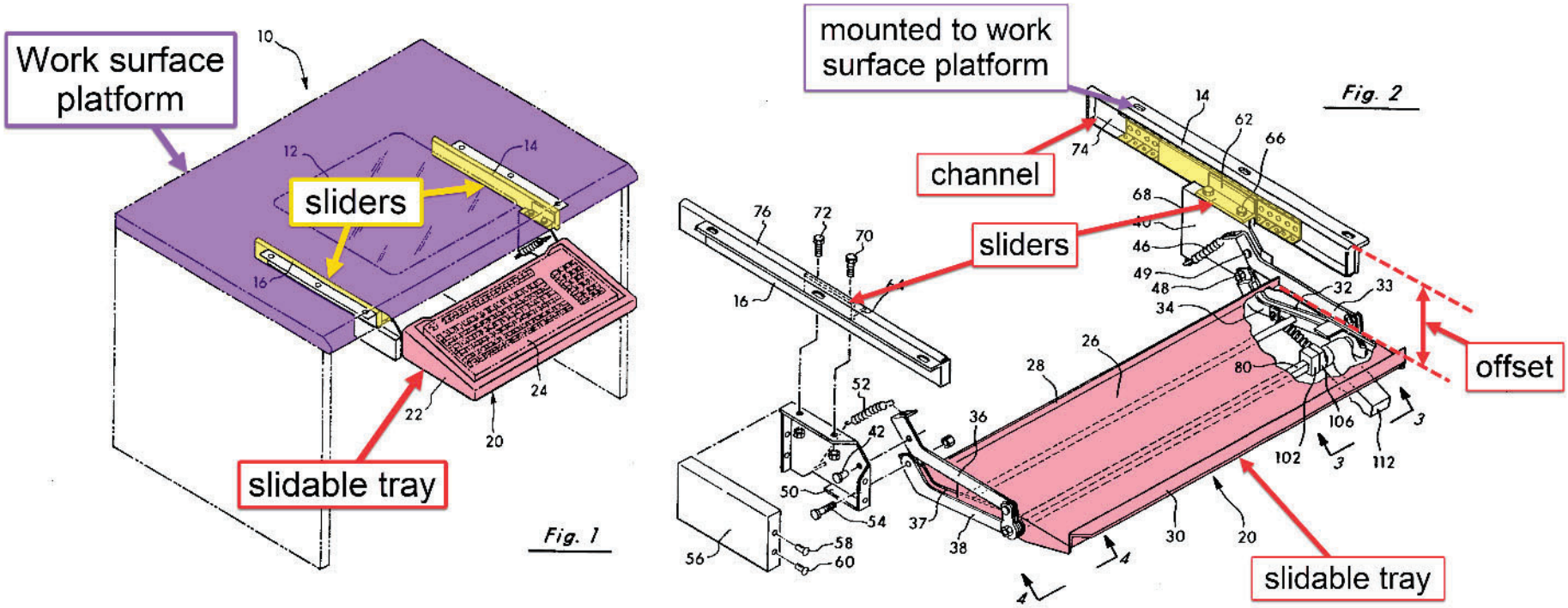

[73]

"Keyboard holder 20 is secured to workstation 10 to slide from an out of the way position beneath the top of workstation 10 to a working position as shown in FIG. 1. Keyboard holder 20, shown in FIG. 1, includes a molded plastic tray 22, which holds most types and sizes of keyboards 24." Drabczyk 3:36-41

"Mounting plates 40, 42 are affixed to slide brackets 62, 64, respectively by bolts 66-72. Slide brackets 62, 64 slide within extendible tracks 74, 76 on mounting brackets 14, 16. ***<u>The design and operation of slide brackets 62, 64 and mounting brackets 14, 16 are conventional in design and are not discussed in any further detail.</u>*** *Thus, support tray 26, along with keyboard tray 22 and keybaord 24 are movable from an out of the way position beneath the upper surface of workstation 10 to a working position shown in FIG. 1." Drabczyk 3:65-4:6 (emphasis added)*

[73] Drabczyk Figures 1 and 2, combined and annotated

As shown above, Drabczyk discloses the use of two sliders (slide brackets 62, 64) that operate in parallel that allow the keyboard to slide between an extended position as shown in Figure 1 above and a stowed position in accordance with traditional design.[74] In addition to this, as shown in Figure 1 of Drabczyk that shows that when in the extended position, the slidable tray is positioned outward and lowered with respect to the work surface platform.	
15P. The desktop workspace of claim 1,	**YES:** As shown above, Lindahl in view of Yamamoto, and in further view of HJ Zottel discloses the desktop workspace of claim 1.
15a. wherein the one end of the gas spring is fixed relative to an underside of the work surface platform such that the one end of the gas spring acts on the underside of the work surface platform.	**YES:** Lindahl in view of Yamamoto and in further view of HJ Zottel discloses that one end of the gas spring is fixed relative to an underside of the work surface platform such that the one of the gas spring acts on the underside of the work surface platform.

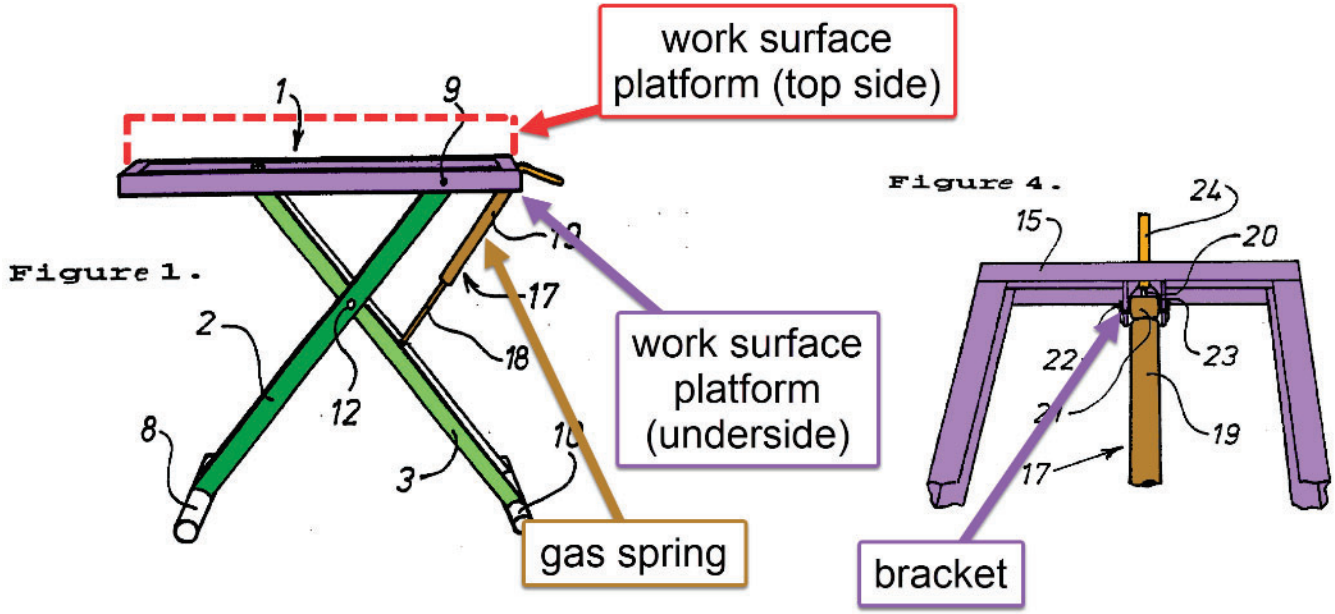

"The present invention relates to a table stand for use preferably in caravans and motorhomes, wherein the top of the stand is provided with a frame-like ***<u>part on which a tabletop is intended to be placed</u>*** *and which is adjustable in the height direction so that the tabletop can be adjusted vertically to different positions." Lindhal, Abstract (emphasis added)*

[74] Drabczyk 3:65-4:6

"An essential feature of the invention is that a blockable gas-spring 17, or piston-cylinder device is provided for enabling the position of the frame-like part 1 to be adjusted vertically in a smooth continuous fashion, both in an upward and in a downward direction. The gas-spring includes a bottom part 18 which is pivotally connected to the leg member 3 beneath the pivot rod 12, and an upper part 19 which is pivotally connected to the transverse frame-bar 15 on the same side of a vertical plane passing through the rod 12 as the lower part 18 (see also Figures 3, 4)." Lindahl 4:5-15 *"The pin 20 is intended to coact with a cylindrical bushing 21 which is pivotally connected to a holder means 23, by means of screws 22 or the like, said holder means being mounted on the inside of the frame bar 15." Lindahl 4:23-27* As shown above Lindahl discloses a work surface platform that comprises a top side (tabletop intended to be placed on the frame) as well as an underside (the frame portion highlighted in purple above). Further, Lindahl teaches a gas spring is fixed relative to the underside of the work surface platform. This is accomplished through the use of a bracket as shown in Figure 4 of Lindahl. Because the gas spring is fixed to the underside of the work surface platform, it acts on the same.	
16P. The desktop workspace of claim 15,	**YES:** As shown above, Lindahl in view of Yamamoto, and in further view of HJ Zottel discloses the desktop workspace of claim 15.
16a. wherein the one end of the gas spring is fixed to the work surface platform via a bracket mounted to the underside of the work surface platform.	**YES:** Lindahl discloses that one end of the gas spring is fixed to the work surface platform via a bracket fixed to an underside of the work surface platform.

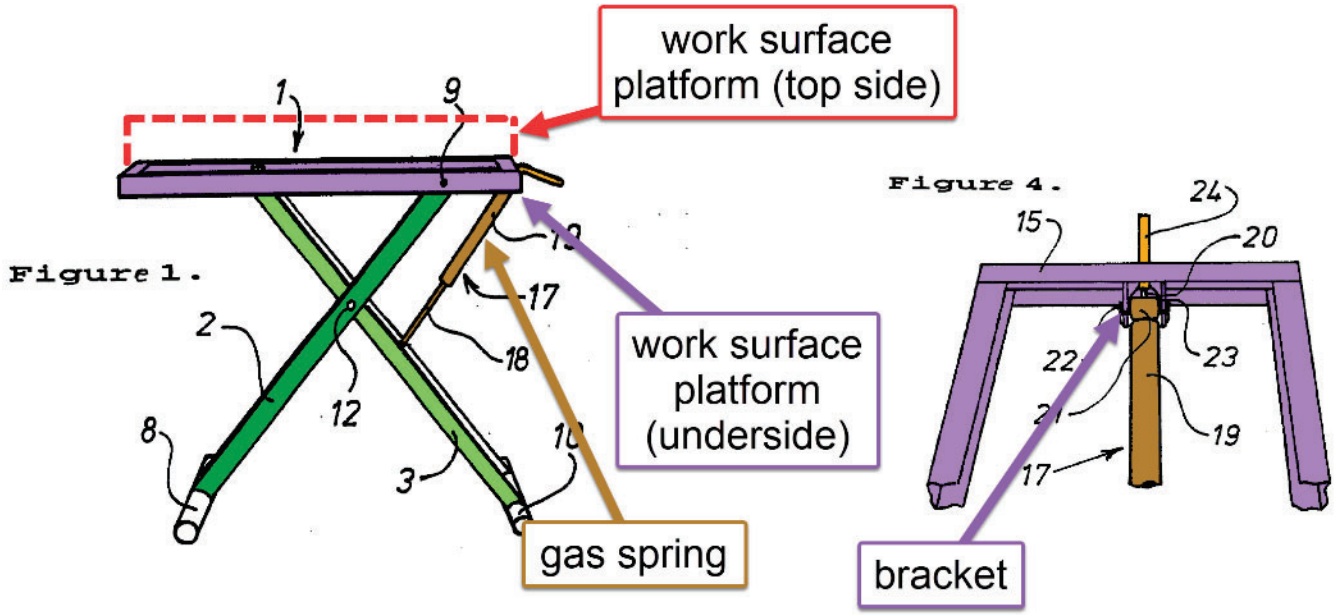

"The present invention relates to a table stand for use preferably in caravans and motorhomes, wherein the top of the stand is provided with a frame-like ***part on which a tabletop is intended to be placed*** *and which is adjustable in the height direction so that the tabletop can be adjusted vertically to different positions." Lindhal, Abstract (emphasis added)*

"An essential feature of the invention is that a blockable gas-spring 17, or piston-cylinder device is provided for enabling the position of the frame-like part 1 to be adjusted vertically in a smooth continuous fashion, both in an upward and in a downward direction. The gas-spring includes a bottom part 18 which is pivotally connected to the leg member 3 beneath the pivot rod 12, and an upper part 19 which is pivotally connected to the transverse frame-bar 15 on the same side of a vertical plane passing through the rod 12 as the lower part 18 (see also Figures 3, 4)." Lindahl 4:5-15

"The pin 20 is intended to coact with a cylindrical bushing 21 which is pivotally connected to a holder means 23, by means of screws 22 or the like, said holder means being mounted on the inside of the frame bar 15." Lindahl 4:23-27

As shown above Lindahl discloses a work surface platform that comprises a top side (tabletop intended to be placed on the frame) as well as an underside (the frame portion highlighted in purple above). Further, Lindahl discloses a gas spring fixed to the work surface platform via a bracket

which is fixed to the underside portion. This is clearly shown in Figure 4 of Lindahl which shows a bracket with ears to which the locking gas spring is coupled.

Yamamoto teaches mounting the pivot arms to the bottom side of the work surface platform using a bracket as shown below:

FIG. 2A

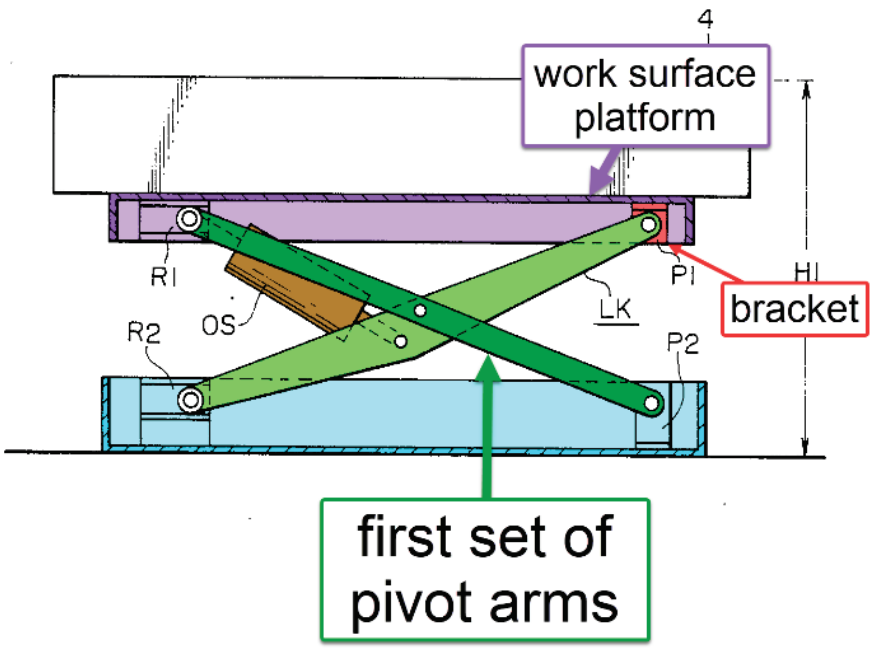

"The lifter LF includes a link mechanism LK having bearings P1 and P2 fixed to ends thereof and rollers R1 and R2 on opposite ends thereof which are movable along a guide rail." Yamamoto 1:68-2:5

As shown above, Yamamoto teaches mounting of the pivot arms to the underside of the work surface platform through the use of a bracket (i.e. pillow block bearing P1 above). A POSITA would understand that the gas spring could easily be mounted to the bottom of the work surface platform using the same methodology.

18P. A desktop workspace that adjusts vertically, comprising:	**YES:** See element 1P.
18a. a work surface platform;	**YES:** See element 1a.

18b. a slidable tray selectively positionable between a stored position under the work surface platform and an extended position that is outward and lowered with respect to the work surface platform,	**YES:** See element 1b.
18c. a base configured to sit on an existing platform; and	**YES:** See element 1c.
18d. a height adjustment mechanism connecting the work surface platform and the base, the height adjustment mechanism including:	**YES:** See element 1d.
18d1. a set of pivot arms that connect at a scissoring pivot point creating a scissoring motion when raising and lowering the work surface platform to various heights;	**YES:** See element 1d1.
18d2. a base pivot point fixed relative to the base and connecting the base and the set of pivot arms;	**YES:** See element 1d2.
18d3. a platform pivot point fixed relative to the work surface platform and connecting the work surface platform and the set of pivot arms;	**YES:** See element 1d3.
18d4. a sliding mechanism on an end of an arm of the set of pivot arms between the end of the arm and either the work surface platform or the base; and	**YES:** See element 1d4.
18d5. a gas spring that assists in elevation of the work surface platform by applying a force to rotate one of the set of pivot arms as part of the scissoring motion,	**YES:** See element 1d5.
18d6. wherein the gas spring, the set of pivot arms, the base pivot point, and the platform pivot point align side-by-side when the desktop workspace is in a fully lowered position such that the desktop workspace adjusts vertically.	**YES:** Lindahl in view of Yamamoto discloses that the gas spring, the first set of pivot arms, the base pivot point, and the platform pivot point align side-by-side when the desktop workspace is in a fully lowered position such that the desktop workspace adjusts vertically.

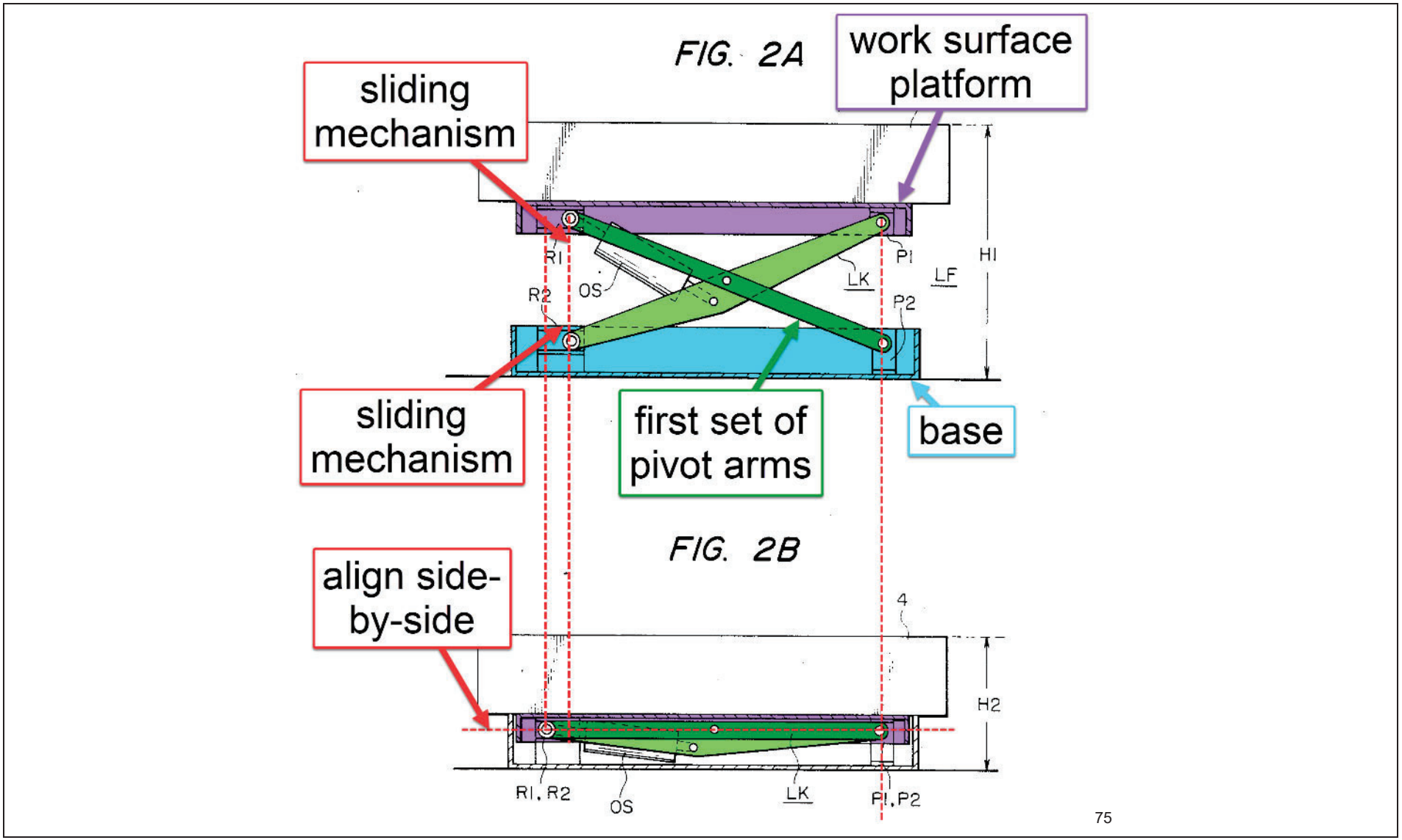

75

[75] Yamamoto Figures 2A and 2B, combined and annotated

"The conventional fluidized bed has a fixed height. However, there has been a demand for a fluidized bed having an adjustable height, ***specifically one in which the height of the bed above the floor can be made as small as possible*** *for ease in transferring a patient onto the bed or when a patient gets onto or off the bed, and placed at a suitable height when the patient is lying on the bed for administering treatment to the patient. To meet this demand, it has been proposed to combine a lifter with the bed for adjusting the height of the bed. FIG. 2 illustrates the arrangement of such a mechanism for producing vertical movement" Yamamoto 1:53-64 (emphasis added)*

As shown above, the Yamamoto linkage is arranged such that the first set of pivot arms, the base pivot point, and the platform pivot point align perfectly side-by-side when the workspace is in a fully lowered position. As Yamamoto uses a hydraulic cylinder to lift, the cylinder is also side-by-side with the pivot arms and other associated components. To the extent that this side-by-side alignment is construed to require that all pivot points of the gas spring are aligned on a horizontal line with the other pivot points, the gas spring is at least partially aligned in Yamamoto (i.e. one of the two pivot points of the cylinder is also in alignment).

The locking gas spring of Lindahl is mounted such that when permitted to fully collapse as the linkage in Yamamoto does, the gas spring pivots points will be in perfect horizontal alignment with the other pivot points.

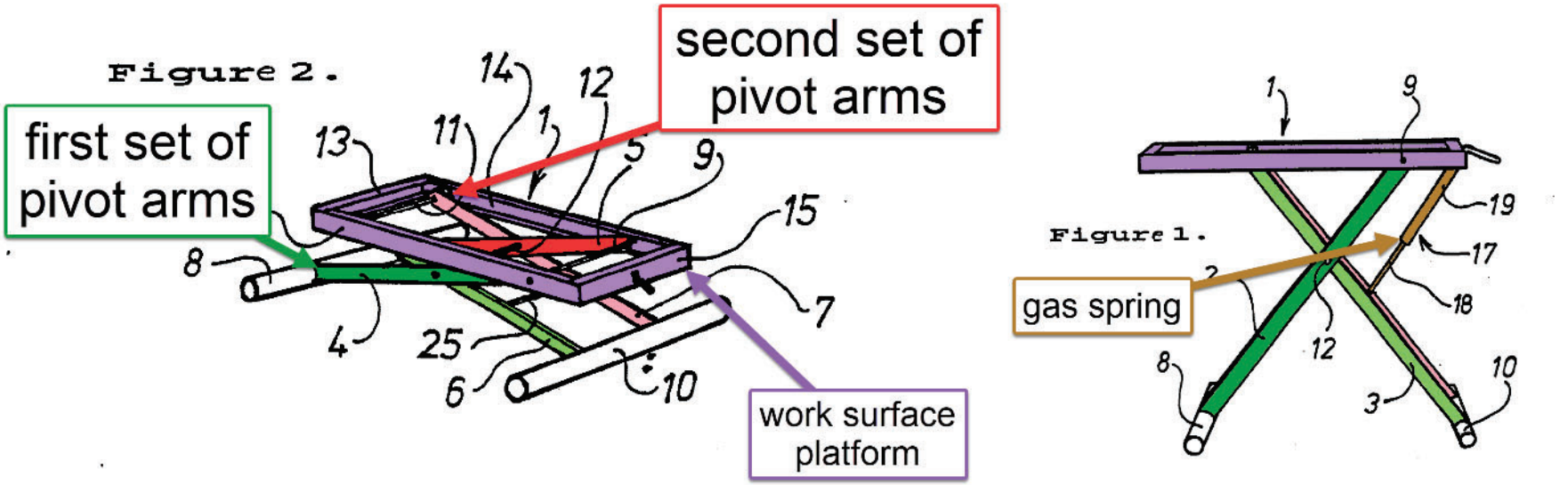

[76]

[76] Lindahl Figures 1 and 2, combined and annotated

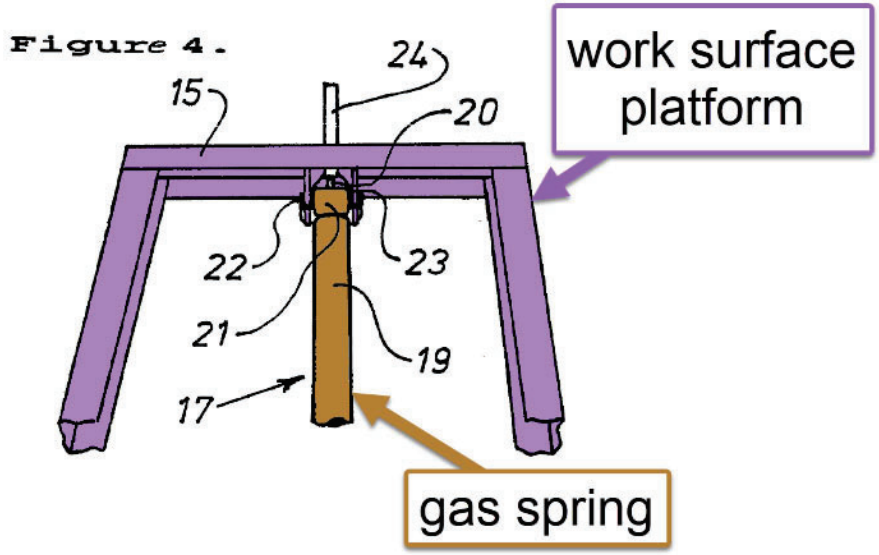

[77]

"An essential feature of the invention is that a blockable gas-spring 17, or piston-cylinder device is provided for enabling the position of the frame-like part 1 to be adjusted vertically in a smooth continuous fashion, both in an upward and in a downward direction. The gas-spring includes a bottom part 18 which is pivotally connected to the leg member 3 beneath the pivot rod 12, and an upper part 19 which is pivotally connected to the transverse frame-bar 15 on the same side of a vertical plane passing through the rod 12 as the lower part 18 (see also Figures 3, 4)." Lindahl 4:5-15

As shown above Lindahl uses a gas spring to assist in the lifting of the work surface platform as opposed to a hydraulic cylinder such as Yamamoto uses. Further, like Yamamoto, the top pivot point of the gas spring of Lindahl is aligned with the rest of the pivot points in the work surface platform frame. The second pivot point of the Lindahl gas spring is centrally located within the width of the pivot arms. In accordance with the teachings of Yamamoto (i.e. the desirability for compactness) and in accordance with the well-understood desire of compactness that is a common reason why scissor lift mechanisms are used in the first place, a POSITA would be motivated to combine the linkage of Yamamoto with the linkage of Lindahl in a way that the scissor arms will line up flat when the platform is fully lowered.

Further still, a POSITA will understand that gas springs are approximately constant force devices, unlike hydraulic cylinders such as used in Yamamoto. A POSITA will further understand that the actuator has the worst mechanical advantage for lifting the platform at the bottom (fully lowered) position. In this position the cylinder of Yamamoto is nearly horizontal. In other words, the actuator is least effective and must generate

[77] Lindahl Figure 4, annotated

the largest force to lift the work surface platform when doing so from the fully lowered position. As stated earlier, a POSITA will recognize that a gas spring will be little utility to lift the platform when in this position. Thus, the lifting assistance provided by a nearly horizontal gas spring would be out-weighed by the loss of compactness offered by keeping the gas spring in a non-horizontal orientation. Thus, a POSITA would be motivated to combine the linkage of Yamamoto with the gas spring placement already in Lindahl to have maximum compactness in the stowed position.

Were the gas spring of Lindahl to be oriented like the hydraulic cylinder of Yamamoto, the gas spring force would have to be increase significantly which would make the platform more difficult to adjust when at the top position. This could even make the table dangerous to adjust as the gas spring would develop greater and greater mechanical advantage as the platform is raised causing it to violently pop up at the end. Further, this would make the platform much more difficult to compress starting from the top. This is because gas-springs are not able to vary their output force in the same way as hydraulic cylinders.

Thus, the combination of Lindahl in view of Yamamoto is configured such that the gas spring, the first set of pivots arms, the base pivot point, and the platform pivot point align side-by-side when the desktop is in a fully lowered position. As discussed previously, it is the very nature of scissor lift mechanisms generally to adjust vertically.

As shown above, Lindahl in view of Yamamoto and in Further view of HJ Zottel with the knowledge of a POSITA renders obvious each and every element of the Asserted Claims of the ’926 patent. In addition to this, certain things that would be well within the ordinary knowledge and familiarity of a POSITA are also explicitly demonstrated in Drabczyk, Clarke, or Zhang. For at least the reasons shown above, it is my opinion that the Asserted Claims of the ’926 patent are invalid due to obviousness under 35 U.S.C §103.