69. As will be demonstrated in the charts below, at least claims 1-10, 12, 14-16, and 18 are rendered obvious by Clarke in view of Lindahl and in further view of HJ Zottel. For reference these three pieces of prior art are shown below:

70.

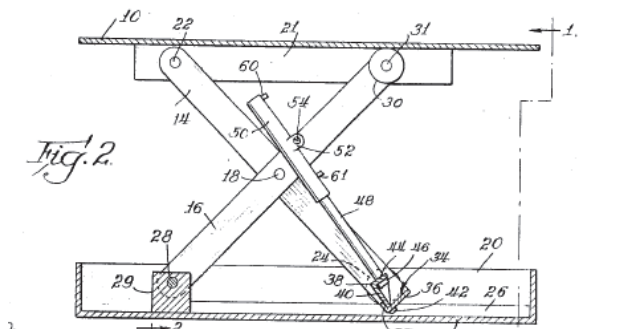	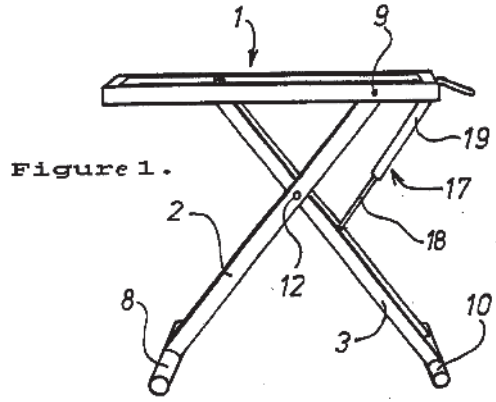	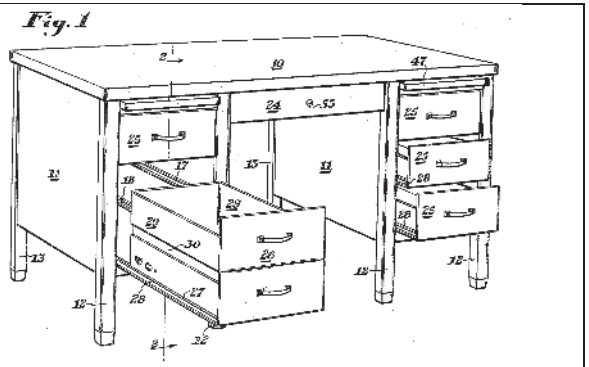
US 3,282,566 to Clarke May 18, 1964	WO 9117906 to Lindahl November 28, 1991	US 2,225,243 to HJ Zottel June 3, 1938

71. I note that despite each of these references being publicly available, only Clarke was disclosed to the examiner during the prosecution of the ’926 patent. A POSITA would be motivated to combine these references in accordance with the teachings therein. For example, Clarke and Lindahl are both vertically adjustable platforms that use a scissor linkage and cylindrical actuator. They are highly compatible with each other, but Clarke shows greater vertical adjustability afforded by the ability to lower to a point where the pivots pints are aligned. Combining Clarke with Lindahl would allow for greater height adjustability as well as allowing the Lindahl table to store more compactly. When combined, the gas spring of Lindahl will also be aligned with the links as in Clarke leading to maximum compactness for storage. A POSITA would further be motivated to combine the locking gas spring of Lindahl with the Clarke linkage, for instance, to create a scissor lift platform that is simpler in its construction and more suitable for lighter duty loading applications. Clarke uses one or more fluid power cylinders to actuate. Fluid power cylinders require hoses, valves, control systems, and pumps to operate. In contrast to this, the locking gas spring of Lindahl has a self-contained pressure source and thus obviates the need for such additional complexity. A POSITA will recognize this as a more desirable option particularly in adapting the Clarke arrangement to a lighter duty load application such as that taught by Lindahl.

72. A POSITA would be further motivated to combine HJ Zottel with the combination of Clarke in view of Lindahl as HJ Zottel discloses a desk top with drawers underneath. This is a well-known design element that any POSITA would understand could be integrated with a scissor lift platform. A POSITA would understand that the depth of the drawers would, at most, be the width of the scissor links so that the drawers do not

prevent the assembly from being fully lowered. HJ Zottel is one of many examples of this well-known design element of having drawers integral with the desk.

Challenged Claim ’926	
1P. A desktop workspace that adjusts vertically, comprising:	**YES:** While the preamble is generally not considered limiting, Clarke in view of Lindahl discloses a desktop workspace that adjusts vertically.

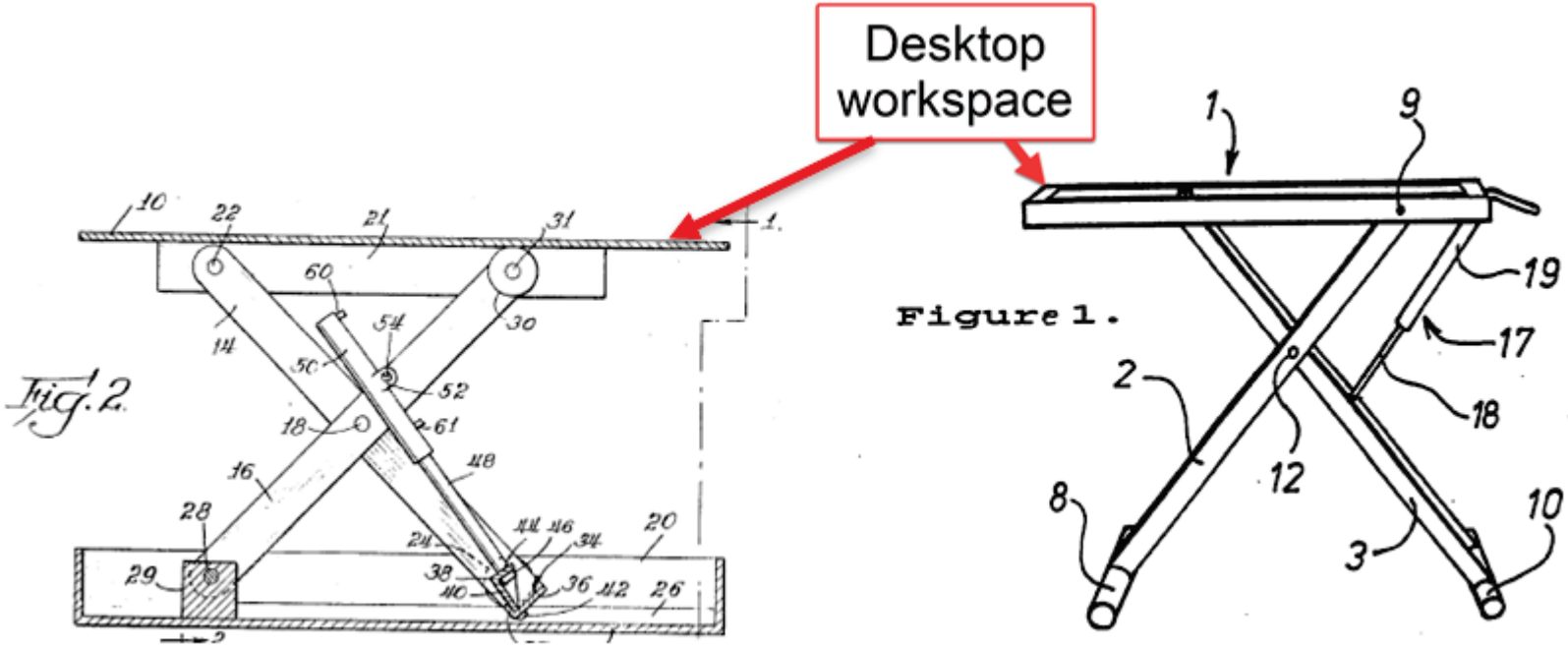

[78]

A POSITA will understand that scissor lift mechanisms adjust the vertical height of a platform surface such as a desktop workspace.

Lindahl discloses a desktop workspace that adjusts vertically:

[78] Clarke, Figure2 and Lindahl, Figure 1, Annotated

"The present invention relates to a table stand for use preferably in caravans and motorhomes, wherein the top of the stand is provided with a frame-like part on which a tabletop is intended to be placed and which is adjustable in the height direction so that the tabletop can be adjusted vertically to different positions." Lindhal, Abstract

As shown above, Lindahl describes a vertically adjustable workspace platform. A POSITA would readily recognize that the Lindahl vertical adjustment mechanism could be used for a wide variety of applications, as scissor lift mechanisms are extremely common and well-known.

Clarke also teaches a desktop workspace that adjusts vertically. For example, Clarke states:

"This invention relates to the operation of a scissors lift in changing it from a down or closed position to up or open position. It is particularly employed in connection with lift tables and the like." Clarke 1:8-11

As shown above, the Clarke linkage is intended for use in lift tables *generally.* As such, a POSITA will recognize its teachings as being applicable to lift mechanisms of many different types including that of a desk workspace style lift table. It is helpful to ascertain the plain and ordinary meaning and scope of "desktop workspace" considering the common dictionary definitions as shown below:

Desktop: the top of a desk[79]
Desk: A table, counter, or booth at which specified services or functions are performed[80]
Workspace: An area used or allocated for one's work, as in an office.[81]

The usage of the term desktop workspace within the '926 patent is consistent with the plain and ordinary meaning of the words from which this compound term is composed. For example, the desktop workspace in the '926 patent is described as having a top surface at which an operator stands to perform their work.[82] In just the same way, Clarke discloses a work surface in the form of a lift table. A POSITA will understand that a lift table is a common piece of equipment that can be used to lift components to a more suitable height for laborers to perform their work at. Similarly, Lindahl discloses a desk surface which is a dedicated space allocated for one's work should they so choose.

1a. a work surface platform;	**YES:** Both Clarke and Lindahl disclose a work surface platform.
Clarke discloses a work surface platform as shown below:	

[79] <https://www.ahdictionary.com/word/search.html?q=desktop> accessed Dec 29, 2024
[80] <https://www.ahdictionary.com/word/search.html?q=desk> accessed Dec 29, 2024
[81] <https://www.ahdictionary.com/word/search.html?q=workspace> accessed Dec 29, 2024
[82] '926 patent 1:33-66

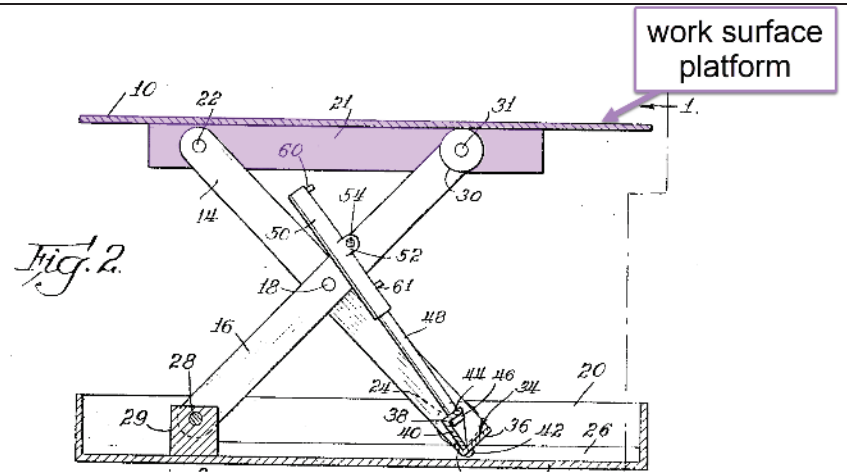

83

"Referring now more particularly to the drawings, the invention comprises a lift table having a top 10 and a base 12 connected by crossed scissors legs 14 and 16 at each side. Legs 14 and 16 are pivotally connected at 18. As shown, the base 12 is in the form of an open shallow box or receptacle having upright sides 20, and the top 10 fits down closely upon the sides enclosing all the operating parts, as shown in FIG. 4." Clarke 1:67-2:2

As shown above, Clarke discloses a lift table. A POSTIA understand that lift tables are useful for raising objects to various heights to be worked on. As such, a lift table is a clear example of a vertically adjustable work surface platform.

Lindahl also discloses a work surface platform as shown below:

83 Clarke, Figure 2, Annotated

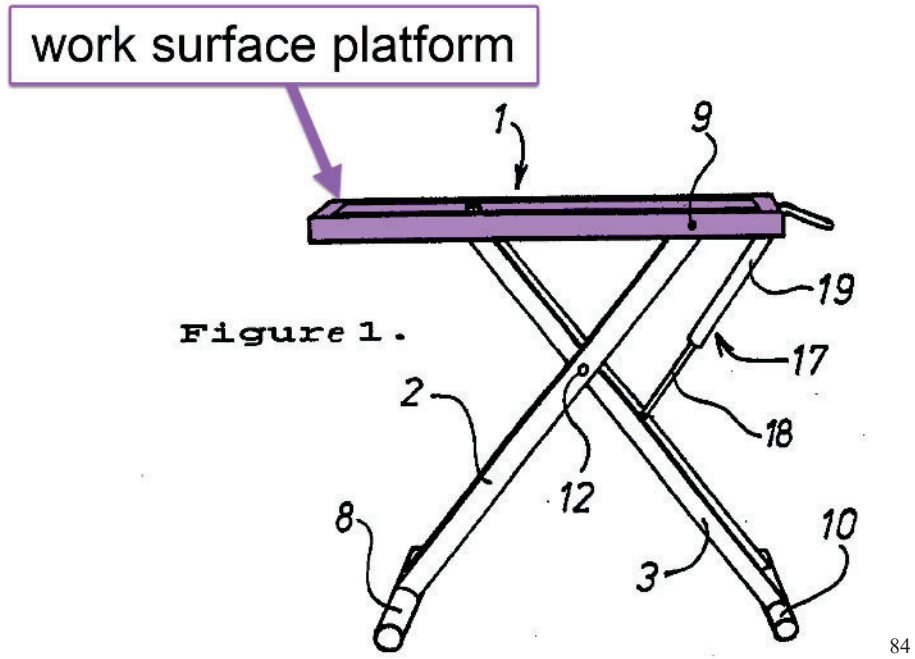

[84]

*"The present invention relates to a table stand intended for use preferably in caravans and motorhomes, wherein the stand supports at the top thereof a frame-like part on which a tabletop is intended to be placed… **Firstly the table is intended for use as a conventional dining table…**" Lindahl 1:3-6, 13-14 (emphasis added)*

"The stand includes a frame-like part 1 which is carried by two leg members 2, 3." Lindahl 3:1-3

As shown above, Lindahl describes a work surface platform that is intended to be used as a work surface platform. A POSITA will understand that a dining table is perfectly suitable for use as a work surface.

1b. a slidable tray selectively positionable between a stored position under the work surface platform and an extended position that is outward and lowered with respect to the work surface platform,	**YES:** Clarke in view of Lindahl and in further view of HJ Zottel discloses a slidable tray selectively positionable between a stored position under the work surface platform and an extended position that is outward and lowered with respect to the work surface platform.

[84] Lindahl, Figure 1, annotated

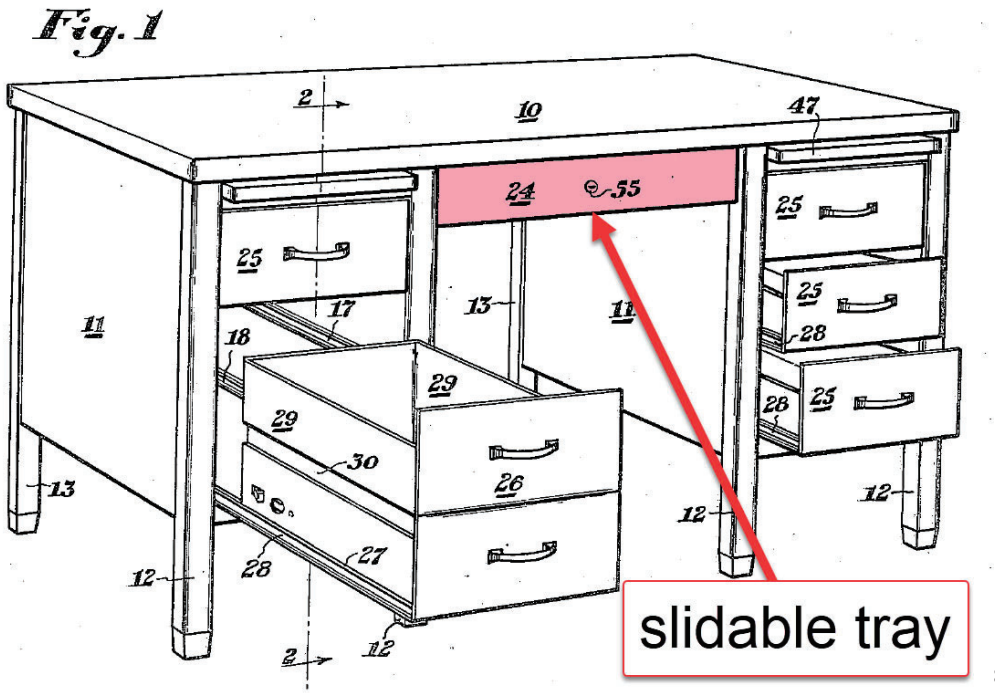

[85]

"The primary objects of the instant invention are to provide a desk having a plurality of box drawers and one or more vertical letter file drawers…" HJ Zottel 1:4-6

"The desk comprises a top 10 supported by drawer supporting pedestals 11 having front legs 12 and rear legs 13 attached thereto" HJ Zottel 1:47-50

"As best shown in Figure 1, the desk is provided with a center drawer 24 between the pedestals 11" HJ Zottel 2:9-11

As shown above, HJ Zottel discloses a slidable tray (drawer 24) which is mounted under the work surface platform (desk top 10). A POSITA will understand that drawers are a common feature that can be (and often is) added to any desk design, for instance the desktop shown in HJ Zottel. Thus, the addition of a drawer to mount under a desk top surface is not inventive in the slightest as this type of design has been well-known for well over 100 years (see for example US 1,508,259 to I.A. Stafford filed in 1919, or George Washington's desk which is over 200

[85] HJ Zottel, Figure 1, annotated

years old and has drawers mounted under the desk surface). Further, a POSITA will understand that drawers are commonly designed to slide into a stored position or out to an open position. For example, Figure 1 of HJ Zottel shows drawer 24 in a stored position and drawer 26 slid out into an open position. As the tray is mounted to the underside of the work surface platform, a POSITA will further understand that when open, the bottom surface of the tray (drawer 24) will be outward and lowered with respect to the work surface platform.

1c. a base configured to sit on an existing platform; and	**YES:** Clarke in view of Lindahl discloses a base configured to sit on an existing platform.

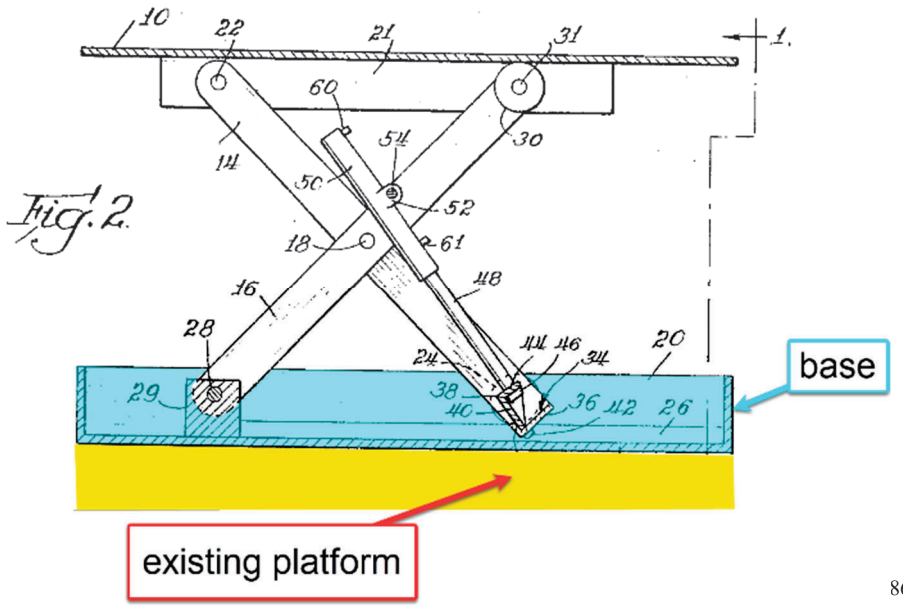

[86]

"Referring now more particularly to the drawings, the invention comprises a lift table having a top 10 and a base 12 connected by crossed scissors legs 14 and 16 at each side." Clarke 1:67-70

As shown, above, Clarke discloses a base which supports the Clarke mechanism on the floor, i.e. an existing platform. Whether the floor is a base floor or a floor several stories up, a POSITA will easily recognize that a floor is an existing platform. For example, the foundation of a house comports with the plain and ordinary meaning of "platform" which is "A horizontal surface raised above the level of the adjacent

[86] Clarke, Figure 2, Annotated

area."[87] As discussed previously, a POSITA would be motivated to combine the base of Clarke with the Lindahl mechanism as it provides a move evenly distributed load on the existing platform (i.e. the floor).

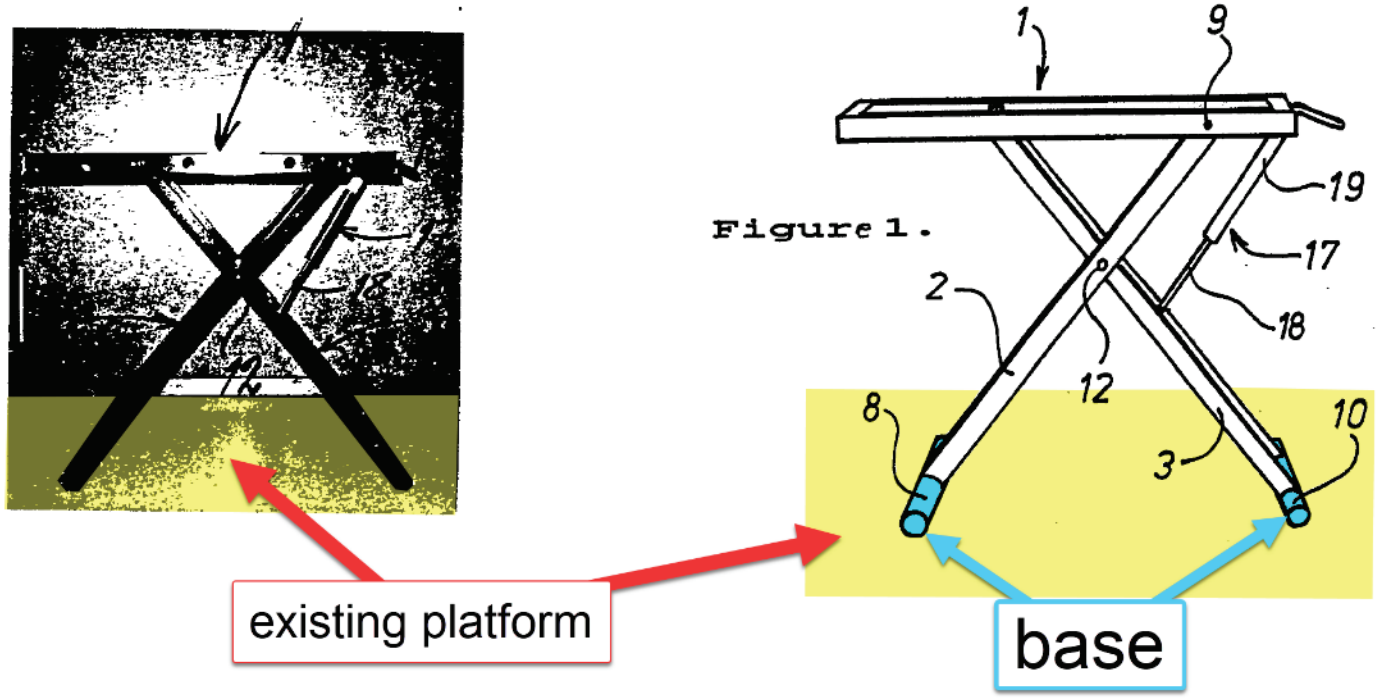

[88]

As shown previously, Lindahl discloses that their work surface platform is configured to be used in caravans and motorhomes.

"The present invention relates to ***<u>a table stand intended for use preferably in caravans and motorhomes,</u>*** *wherein the stand supports at the top thereof a frame-like part on which a tabletop is intended to be placed… Firstly the table is intended for use as a conventional dining table…" Lindahl 1:3-6, 13-14 (emphasis added)*

[87] <https://www.ahdictionary.com/word/search.html?q=platform> accessed Dec 27, 2024
[88] Lindahl, Figure 1, Annotated

"Each leg member 2, 3 includes two substantially parallel rods or bars 4, 5; 6, 7, wherein the two bars of each pair of bars are spaced from one another and are connected together at both ends thereof by means of a respective transverse rod 8, 9; 10, 11, wherein ***<u>the lowermost transverse rods 8; 10 function to support the stand against the underlying support surface</u>****..." Lindahl 3:3-10 (emphasis added)*

A POSITA will recognize that the floor of a caravan or motorhome is an existing platform on which the desk is taught to be used. The floor of a caravan or motorhome is a large flat surface consistently held at a height elevated from the ground. Lindahl also has a base in the form of transverse rods 8 and 10. The base supports the stand against the underlying support surface (i.e. existing platform).

1d. a height adjustment mechanism connecting the work surface platform and the base, the height adjustment mechanism including:	**YES:** Clarke in view of Lindahl discloses a height adjustment mechanism connecting the work surface platform and the base.

Clarke discloses a height adjustment mechanism and a base:

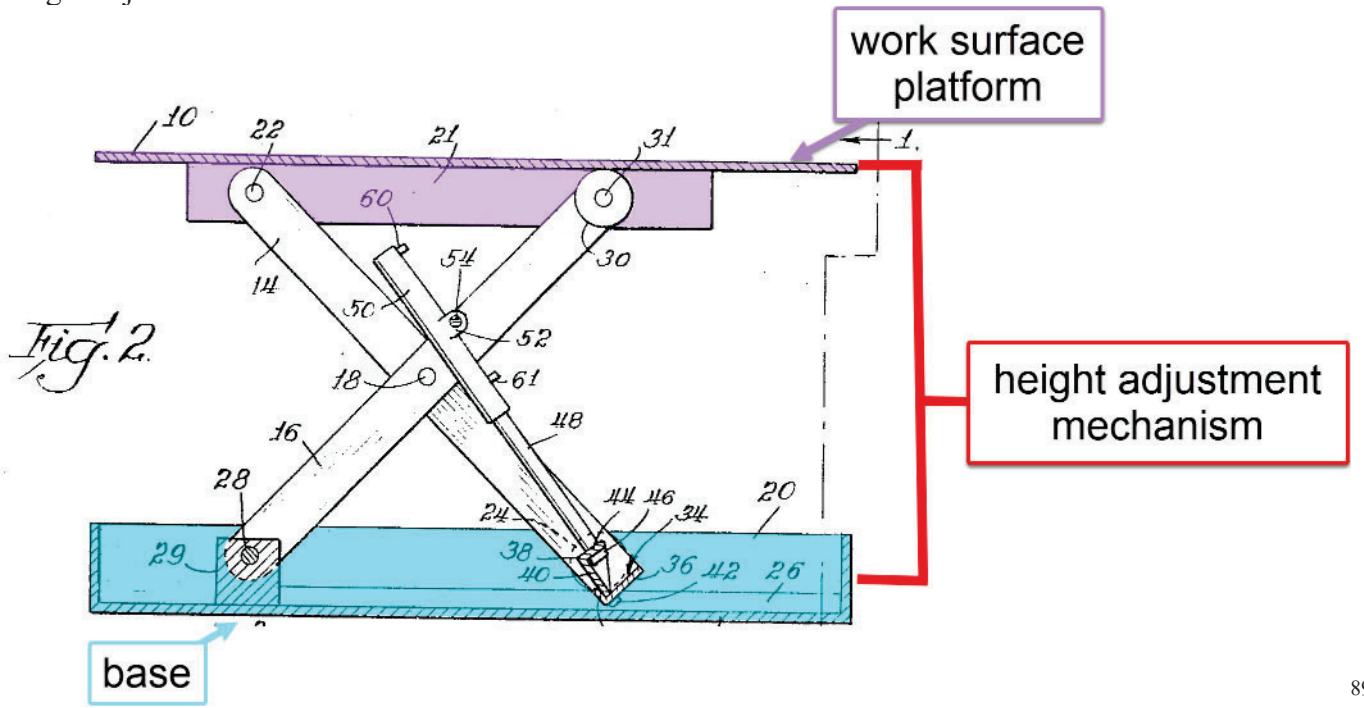

[89]

[89] Clarke, Figure 2, Annotated

"This invention relates to the operation of a scissors lift in changing it from a down or closed position to up or open position. It is particularly employed in connection with lift tables and the like." Clarke 1:8-11

"Referring now more particularly to the drawings, the invention comprises a lift table having a top 10 and a base 12 connected by crossed scissors legs 14 and 16 at each side." Clarke 1:67-70

The Lindahl mechanism also uses a combination of a scissor linkage and a gas spring to serve as a height adjustment mechanism. As discussed previously, a POSITA would be motivated to combine Lindahl with the base as disclosed by Clarke. In this combination, the height adjustment mechanism connects the work surface platform to the more substantial base of Clarke which distributes the load more evenly than the base of Lindahl.

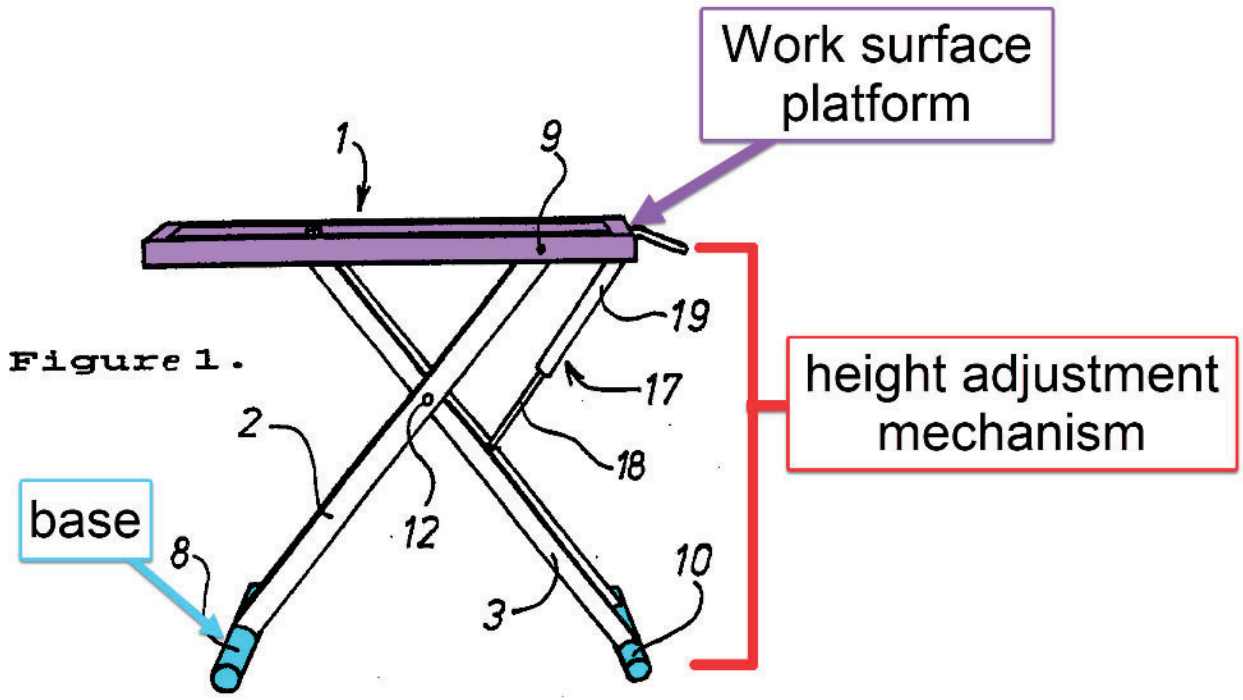

[90]

[90] Lindahl, Figure 1, Annotated

"A gas-spring, or piston-cylinder device, so arranged in the stand ***as to enable the frame-like part of said stand to be adjusted vertically, both downwardly and upwardly****, wherein the gas-spring can be blocked in its position, so as to maintain the position of the frame-like part and therewith the position of the tabletop in relation to the underlying supporting surface. This enables the frame-like part, and therewith the tabletop, to be adjusted continually to any selected vertical position, in which position the gas-spring is locked." Lindahl 2:12-22 (emphasis added)* *"The stand includes at least two leg members which are hinged or pivotally connected together such as to enable the parts of said leg members located on mutually opposite side of the hinge or pivot to be moved towards and away from one another in a scissor-like fashion." Lindahl 1:30-35* As shown above, both Clarke and Lindahl disclose a height adjustment mechanism that connects the work surface platform and the base. A POSITA will recognize that both Clarke and Lindahl use a scissor linkage in combination with a cylinder style force actuator and that the height adjustment mechanism of Clarke could be used in the Lindahl mechanism and vice versa.	
1d1. a set of pivot arms that connect at a scissoring pivot point creating a scissoring motion when raising and lowering the work surface platform to various heights;	**YES:** Both Clarke and Lindahl have a set of pivot arms that connect at a scissoring pivot point creating a scissoring motion when raising and lowering the work surface platform to various heights.
The pivot arms below are part of the height adjustment mechanism:	

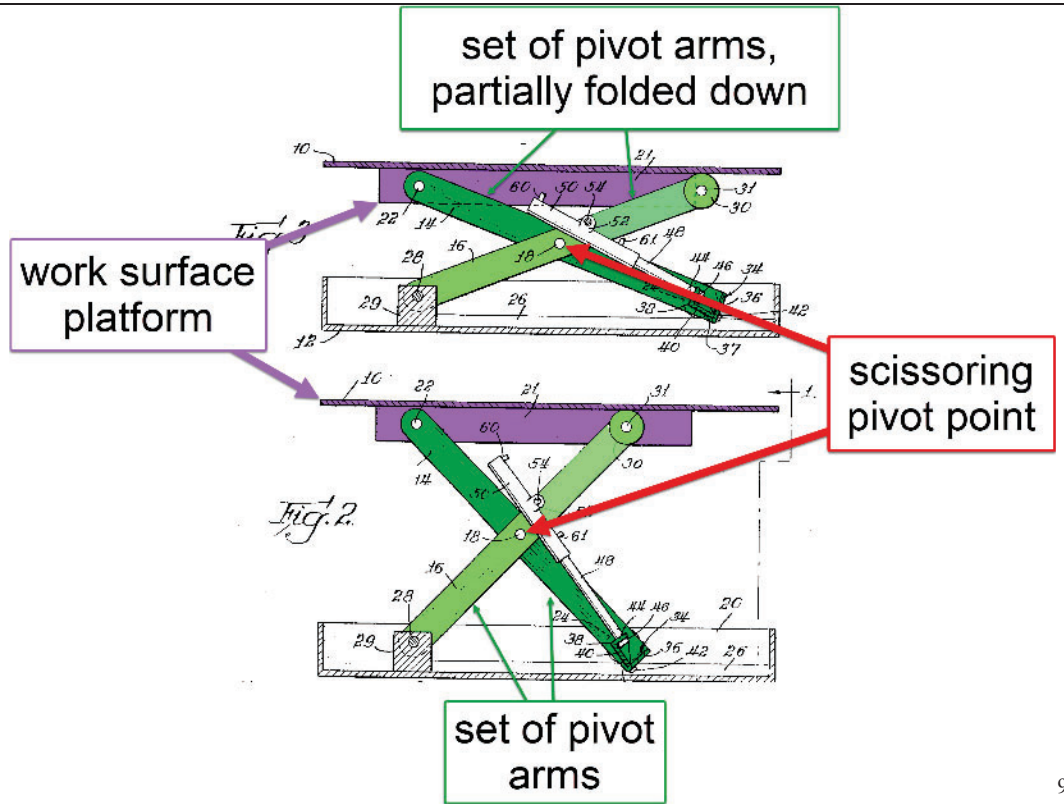

[91]

As shown above, Clarke discloses a set of pivot arms that connect at a scissoring pivot point creating a scissoring motion when raising and lowering the work surface platform to various heights.

"Referring now more particularly to the drawings, the invention comprises a lift table having a top 10 and a base 12 connected by crossed scissors legs 14 and 16 at each side. Legs 14 and 16 are pivotally connected at 18." Clarke 1:67-70

As shown in the citation above, the Clarke mechanism discloses a set of pivot arms (scissor legs 14 and 16). These are connected in a linkage making a scissor mechanism which is used to lift the table and to set it at various heights. As the lifting mechanism is moved up and down, the pivot arms move with a scissoring motion. Between Figures 2 and 3 the same mechanism is shown in two different states of lift (i.e. various

[91] Clarke, Figure 2 & 3, Annotated

heights). By comparing the positions of the pivot arms, it can clearly be seen that scissoring motion takes place to move the lift mechanism from the position shown in Figure 2 to the position shown in Figure 3.

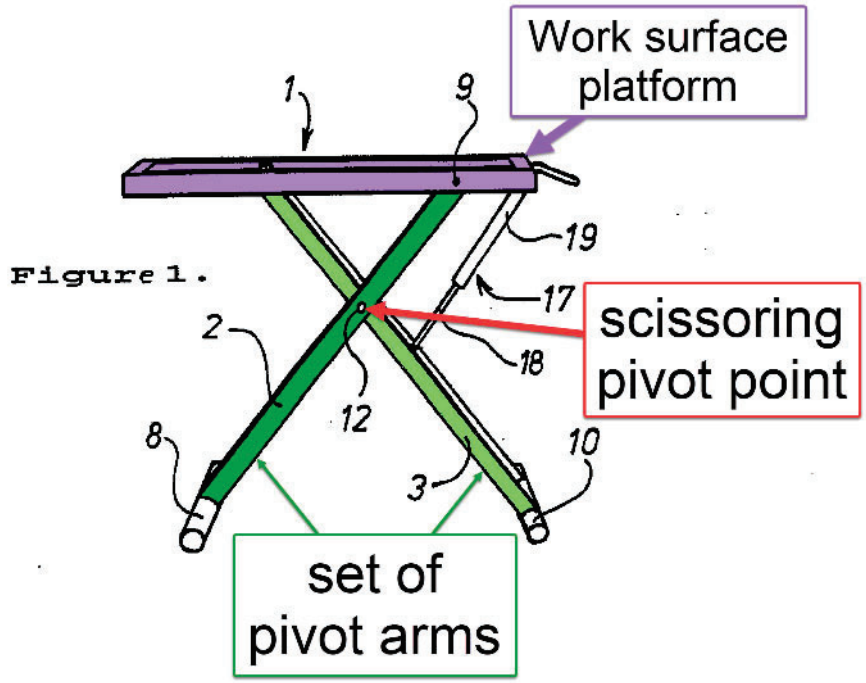

[92]

As shown above, Lindahl also has a set of pivot arms, items 2 and 3 above. These legs connect at a scissoring point at pin 12. Together, these legs and pin create a scissoring motion when raising and lowering the work surface to various heights.

"Figures 1 and 2 illustrate the inventive stand. The stand includes a frame-like part 1 which is ***carried by two leg members 2, 3****. … **The two leg members 2, 3**, i.e. the pairs of bars 4, 5; 6, 7* ***are mutually connected by means of a hinge means or pivot in the form of a transverse rod 12****, which extends through the bars approximately midway therealong the rods, preferably at a location which is slightly above centre.* ***This enables the two ends of respective pairs of bars 4, 5; 6, 7 to be moved towards and away from each other in a scissor-like fashion and therewith move the frame-like part 1 vertically.****"* (Lindahl 3:1-3, 11-20, emphasis added)

[92] Lindahl, Figure 1, Annotated

"The present invention relates to a table stand for use preferably in caravans and motorhomes, wherein the top of the stand is provided with a frame-like part on which a tabletop is intended to be placed and which is ***adjustable in the height direction so that the tabletop can be adjusted vertically to different positions****." Lindhal, Abstract* As shown in the citations above, the Lindahl mechanism has a set of pivot arms that connect at a scissoring point. These leg members form a scissor mechanism that adjusts the work surface platform to various heights. A POSITA would understand that scissor mechanisms are suitable for vertical lifting applications such as Clarke and Lindahl. Scissor mechanisms are well-known and are very commonly built with two sets of pivots arms.	
1d2. a base pivot point fixed relative to the base and connecting the base and the set of pivot arms;	**YES:** Clarke discloses a base pivot point fixed relative to the base and connecting the base and the set of pivot arms.

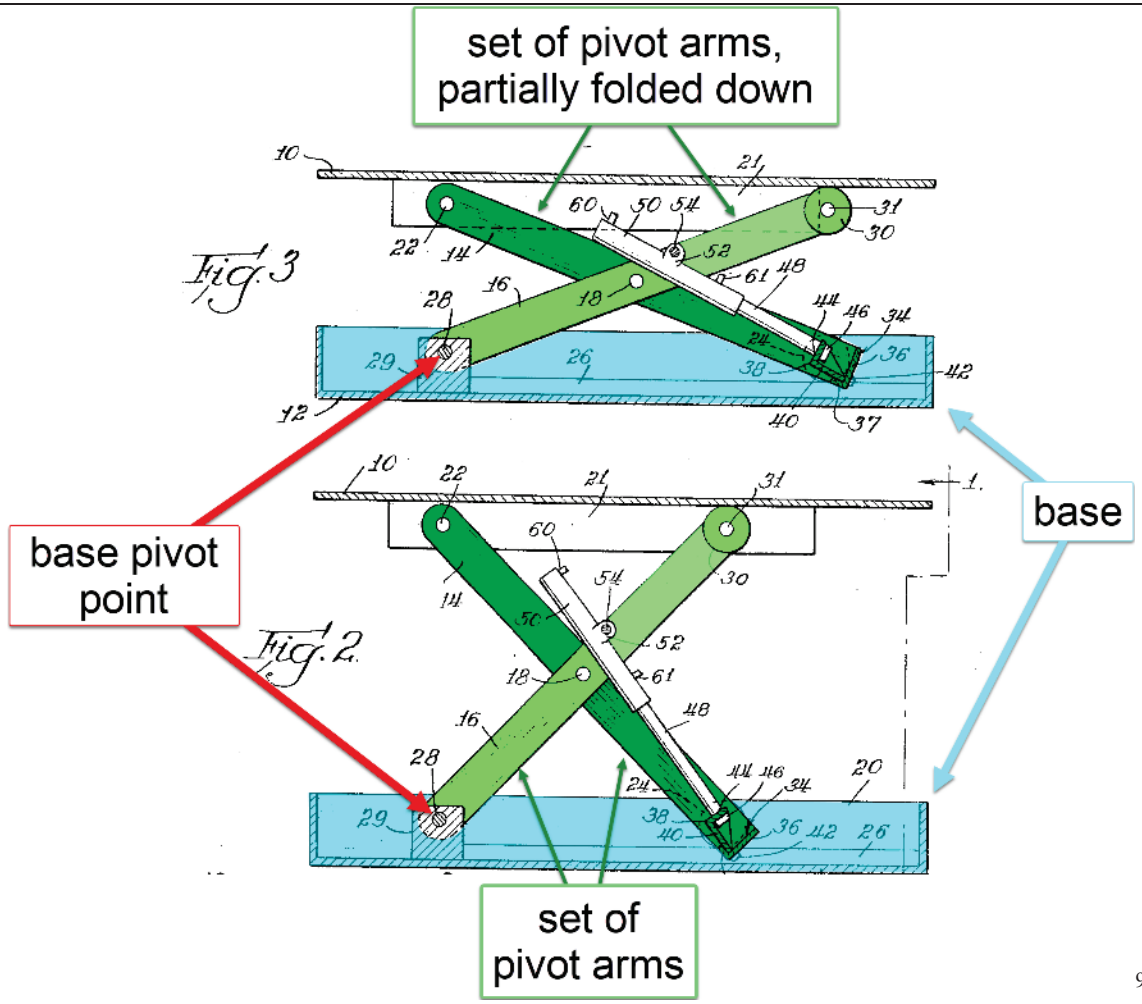

[93]

"Depending from the top, at each side, is a plate 21. A pivot 22 near one end of the plate 21 connects the upper end of the leg 14 to the plate. Leg 14 has a roller 24 rotatably mounted at the other end on shaft 25. Roller 24 rides on the upper surface of a strip 26 in the bottom of one side of the base 12. ***<u>One end of the other leg 16 has a pivot 28 connecting it to a support block 29</u>*** *directly below the pivot 22 for the leg 14. A roller 30 mounted on shaft 31 at the other end of leg 16 rides on the underside of the table top 10. The legs are closely folded together by the pivot 18 intermediate their ends, for parallel scissor action between the base and the top." Clarke 2:3-14 (emphasis added)*

[93] Clarke, Figure 2 & 3, Annotated

As shown above, Clarke discloses a base pivot point which connects the base and the first set of pivot arms. A POSITA will understand that this is ubiquitous with scissor lift mechanism design. It is a required part of any scissor lift mechanism that is fixed to a base as it is one of the main supports for the entire lift mechanism. As discussed previously, a POSITA would be motivated to combine the base of Clarke with the Lindahl mechanism.	
1d3. a platform pivot point fixed relative to the work surface platform and connecting the work surface platform and the set of pivot arms;	**YES:** Both Clarke and Lindahl have a platform pivot point fixed relative to the work surface platform and connecting the work surface platform and the set of pivot arms.

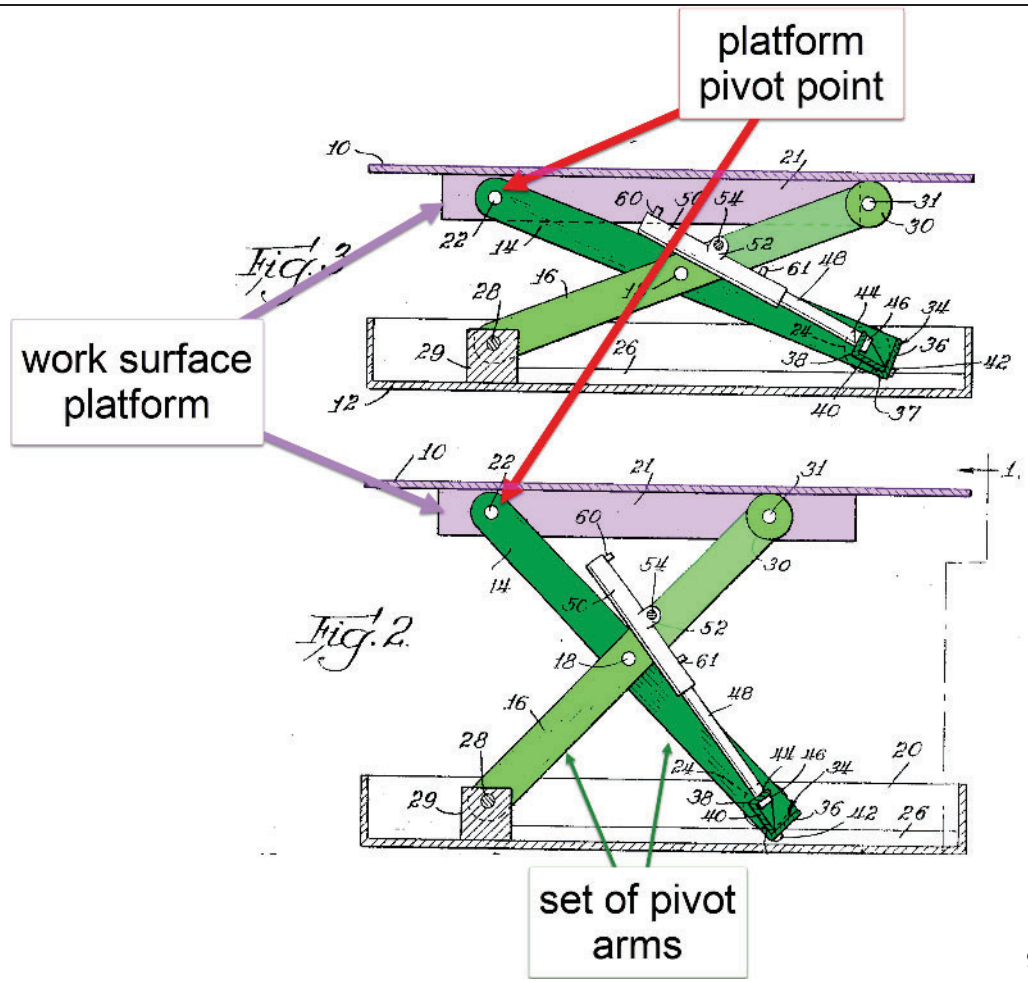

[94]

"Depending from the top, at each side, is a plate 21. ***<u>A pivot 22 near one end of the plate 21 connects the upper end of the leg 14 to the plate.</u>*** *" Clarke 2:3-4 (emphasis added)*

[94] Clarke, Figure 2 & 3, Annotated

As shown in the figure above, Clarke discloses a platform pivot point as element 22 shown above. A POSITA will recognize that this design layout is universally used with scissor lift mechanisms. It is ubiquitous and well-known and therefore not inventive. Both Clarke and Lindahl simply provide yet one more example of this design layout.

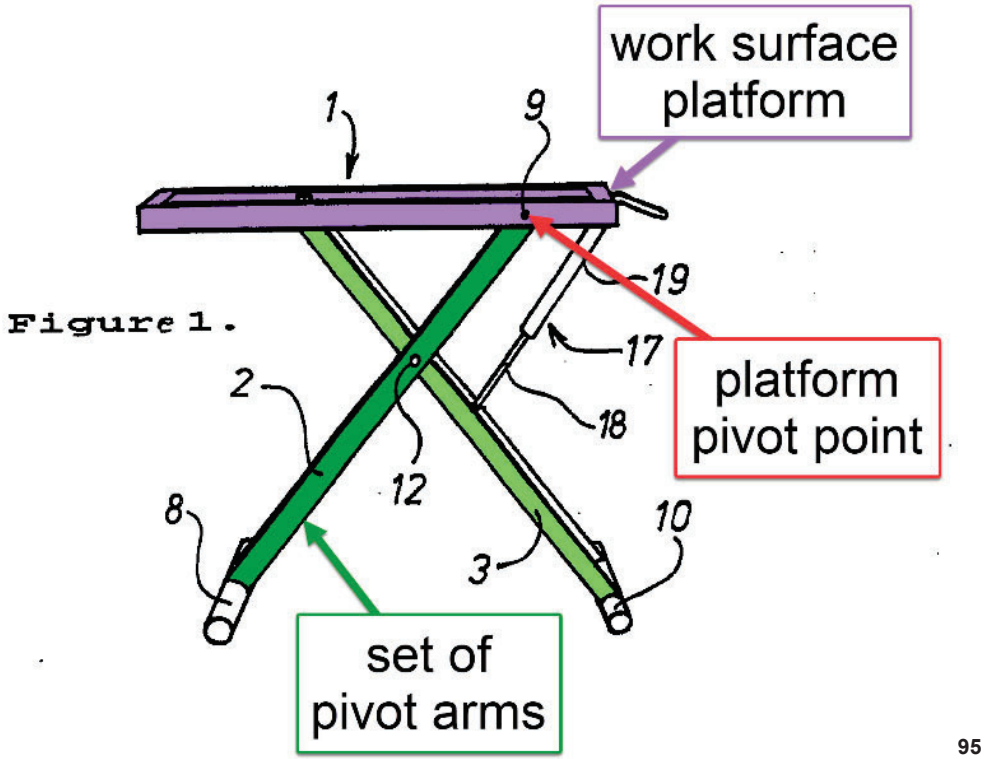

[95]

"Each leg member 2, 3 includes two substantially parallel rods or bars 4, 5; 6, 7, wherein the two bars of each pair of bars are spaced from one another and are connected together at both ends thereof by means of a respective transverse rod 8, 9; 10, 11, wherein the lowermost transverse rods 8; 10 function to support the stand against the underlying support surface and wherein the upper, transverse rods 9; 11 are intended to coact with the frame-like part 1." Lindahl 3:3-11

[95] Lindahl, Figure 1, Annotated

As shown in the figure and citation above, Lindahl also discloses transverse rod 9 which is a platform pivot point fixed relative to the work surface platform which connects the work surface platform to a first set of pivots arms. As discussed previously, this platform pivot point is ubiquitous in scissor lift linkage design. Clarke and Lindahl both disclose it and a POSITA would understand this pivot point exists merely by knowing that a scissor lift mechanism is involved in the design.	
1d4. a sliding mechanism on an end of an arm of the set of pivot arms between the end of the arm and either the work surface platform or the base; and	**YES:** Both Clark and Lindahl disclose a sliding mechanism on an end of an arm of the set of pivot arms between the end of the arm and either the work surface platform or the base.

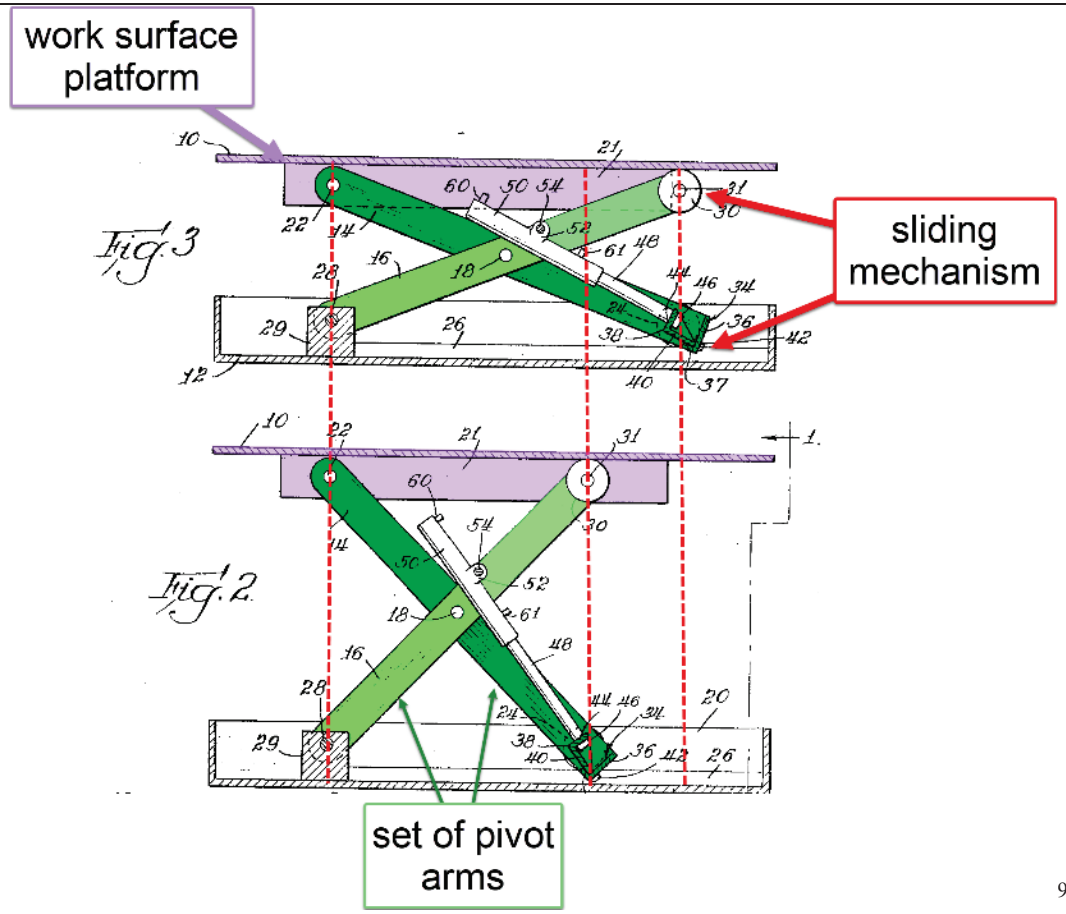

[96]

"Depending from the top, at each side, is a plate 21. A pivot 22 near one end of the plate 21 connects the upper end of the leg 14 to the plate. Leg 14 has a roller 24 rotatably mounted at the other end on shaft 25. Roller 24 rides on the upper surface of a strip 26 in the bottom of one side of the base 12. One end of the other leg 16 has a pivot 28 connecting it to a support block 29 directly below the pivot 22 for the leg 14. A roller 30 mounted on shaft 31 at the other end of leg 16 rides on the underside of the table top 10. The legs are closely folded together by the pivot 18 intermediate their ends, for parallel scissor action between the base and the top." Clarke 23-14

[96] Clarke, Figure 2 & 3, Annotated

As shown in the figure above, Clarke also discloses a sliding mechanism, a roller (item 30), on the end of a set of pivot arms (item 16) that is between the end of the pivot arm and the work surface platform.

In addition, the set of rollers 24 and 30 allow for what the ’926 patent considers to be sliding (i.e. translating) movement as is well-known and ubiquitous in the design of a common scissor lift linkage. It is kinematically necessary as a part of the design of a scissor lift linkage to allow these pivot points to move in this way. As will be shown later in the claim language, the term “sliding mechanism” must be interpreted to include rolling contact for example ’926 patent claim element 11a reads “wherein the sliding mechanism includes a wheel mounted on the end of the arm of the first set of pivot arms.” A POSITA would understand that a wheel is used for rolling contact which is typically different from sliding contact. Nevertheless, a POSITA would understand that scissor linkages can are often are made with rolling OR sliding contact and they function just the same. The only difference is that sliding contact has slightly more drag than rolling contact. This drag is commonly minimized for example through the use of low friction wear pad materials. For example, the Pop Up brand Push Pro scissor lift (available at least as early as July 2014) uses a sliding contact at the movable pivot of a scissor lift as opposed to a roller.[97] Clarke discloses an extremely common arrangement where these pivot points translate both in the top and the bottom. That is to say between the scissor links and the work surface platform as well as between the scissor links and the base.

[97] See Operators Manual - Pop Up - Push Pro.pdf, cover page, and Figures 8.14 and 8.15

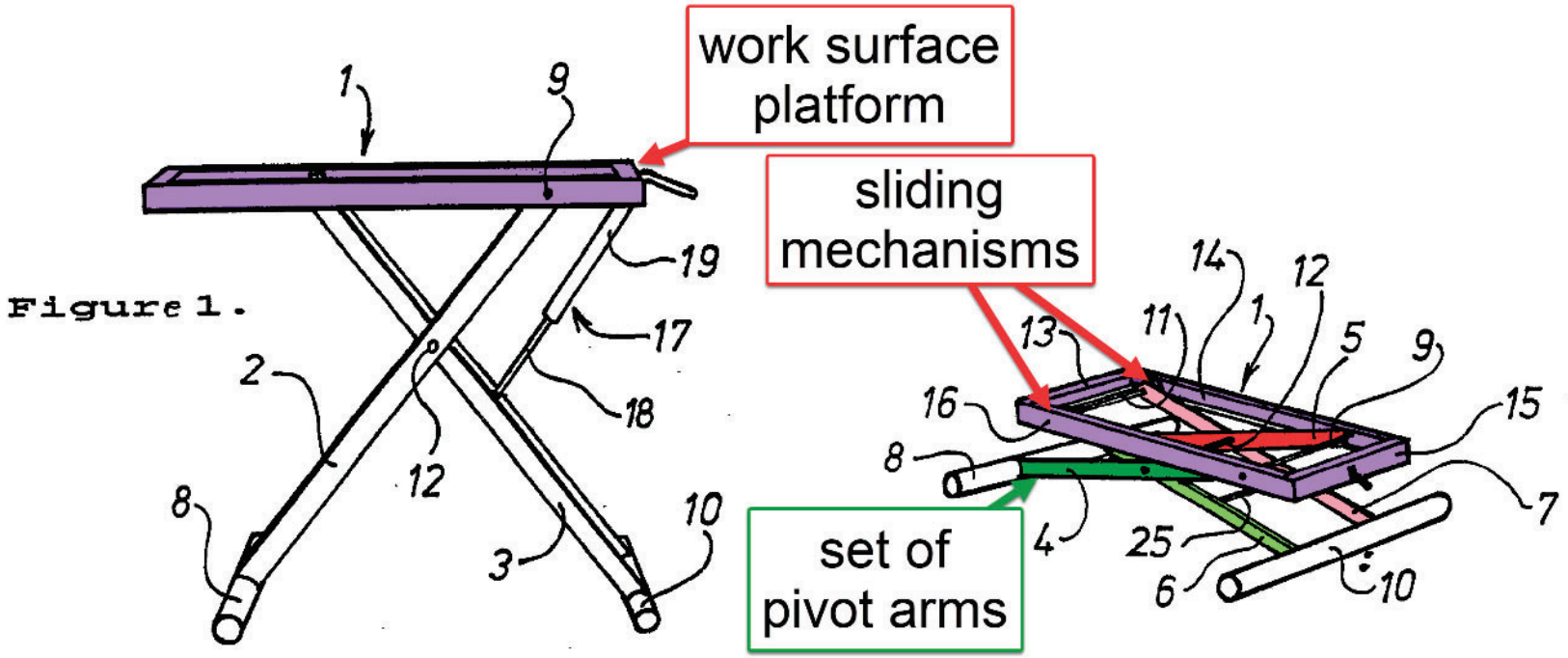

[98]

"The one rod 9 is pivotally mounted in the bars 14, 15, whereas the other ***transverse rod 11 is provided at both ends with suitable means for sliding in the U-shaped part of the bars*** *in order to achieve the aforesaid scissor-like movement of the leg members." Lindahl 3:31-4:3 (emphasis added)*

As shown above, Lindal also discloses a sliding mechanism on the end of the first set of pivot arms between the first set of pivot arms and the work surface platform.

1d5. a gas spring that assists in elevation of the work surface platform by applying a force to rotate one of the set of pivot arms as part of the scissoring motion,	**YES:** Clarke in view of Lindahl discloses a gas spring that assists in the elevation of the work surface platform by applying a force to one of the set of pivot arms as part of the scissoring motion.

[98] Lindahl Figures 1 and 2, combined and Annotated

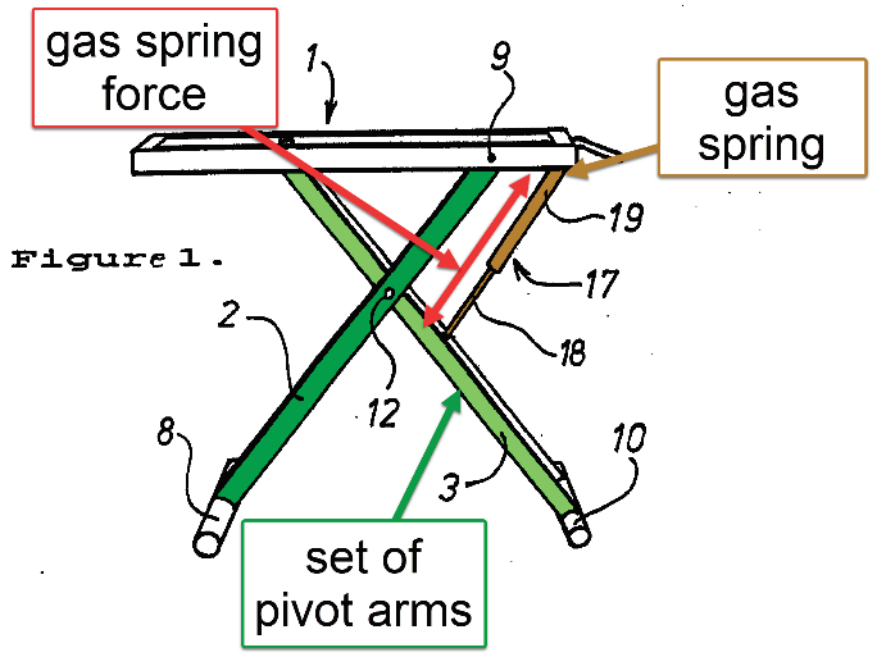

[99]

"An essential feature of the invention is that a blockable gas-spring 17, or piston-cylinder device is provided for enabling the position of the frame-like part 1 to be adjusted vertically in a smooth continuous fashion, both in an upward and in a downward direction. ***The gas-spring includes a bottom part 18 which is pivotally connected to the leg member 3*** *beneath the pivot rod 12, and an upper part 19 which is pivotally connected to the transverse frame-bar 15 on the same side of a vertical plane passing through the rod 12 as the lower part 18 (see also Figures 3, 4)." Lindahl 4:5-15 (emphasis added)*

As shown in the figure and the citation above, Lindahl discloses a gas spring that is used to facilitate the movement of the scissor linkage and therefore work surface platform. The gas-spring of Lindahl is connected between the work surface platform and the pivot arms. As such, it applies force to the pivot arms as well as the work surface platform as part of the scissoring motion. I further note that Lindahl provides yet another teaching of the interchangeability of a gas-spring and a hydraulic cylinder. As shown in the citation above, Lindhal states, "a blockable gas-spring 17, or piston-cylinder device." A POSITA would understand that a lockable gas-spring is a piston cylinder device. A POSITA would also understand that a hydraulic or pneumatic cylinder is a piston-cylinder device. Thus, the Clarke mechanism also shows a piston-

[99] Lindahl, Figure 1, Annotated

cylinder device between the work surface platform and the pivoting links as is well-known in the typical and ordinary design of scissor lift mechanisms. A POSITA would understand that the fluid-power cylinder(s) of Clarke could be replaced with a gas spring. This would change the Clarke device from an actively driven scissor lift to an assisted but manually driven scissor lift, which would be desirable for lower load applications such as Lindahl teaches.

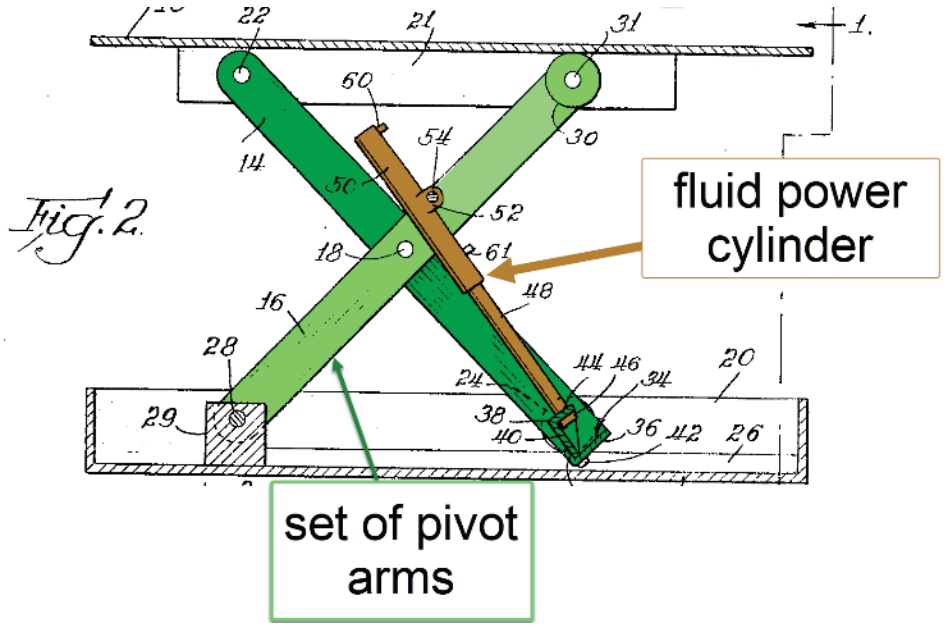

[100]

"Cylinder 50 has a side mounting plate 52 pivotally mounted on a rod 54. Rod 54 extends between the two opposite legs 16 to which it is connected. It is located at the side of the cylinder 50 opposite the pivotal mountings formed by studs 42. This rod 54 is at the upper side of the legs 16 above the common pivot 18 for the legs (FIGURE 4), and the mountings 52 extend downwardly. In the down position the cylinders will be entirely below the upper edges of the legs 16 to which they are connected." Clarke 2:32-41

*"To **supply air or fluid pressure**, each cylinder 50 is provided with an inlet 60 near its outer end to Which some suitable connection (not shown) is made. Adjacent the other end is a pipe 61 which may be used as an exhaust, or connected to the pressure source through a suitable valving arrangement if the cylinder is to be double acting." Clarke 2:67-72*

[100] Clarke, Figure 2, Annotated

For at least the reasons previously discussed, a POSITA would be motivated to use the locking gas spring as taught in Lindahl with the Clarke mechanism. Thus, when this combination is made, it will have a gas spring that assists in the elevation of the work surface platform by applying force to one of the first set of pivot arms as part of the scissoring motion. This connection that makes the scissoring motion is made at pivot element 18 of Clarke as shown above.

1d6. wherein one end of the gas spring is fixed to the work surface platform, wherein the gas spring acts as a locking device that holds the work surface platform at various vertical heights above the base, and	**YES:** Clarke in view of Lindahl discloses that one end of the gas spring is fixed to the work surface platform, and wherein the gas spring acts as a locking device that holds the work surface platform at various vertical heights above the base.

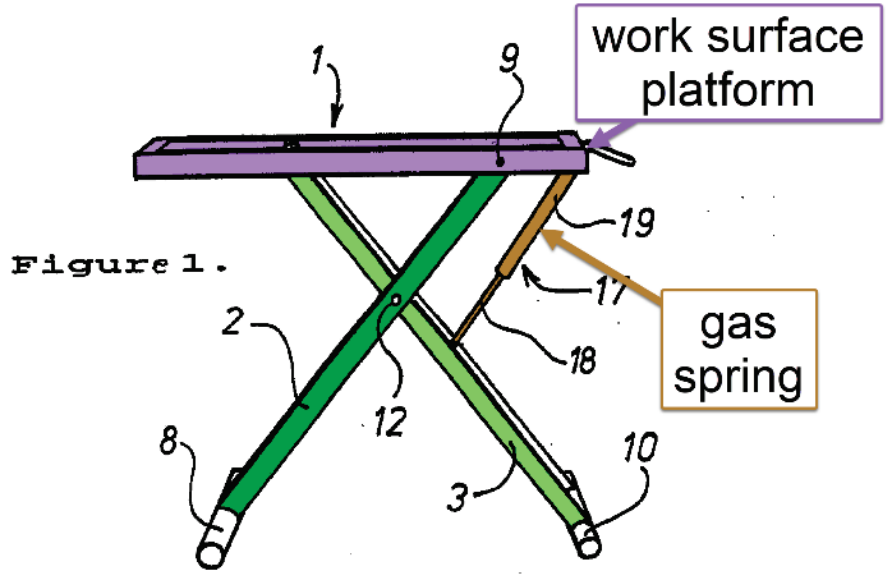

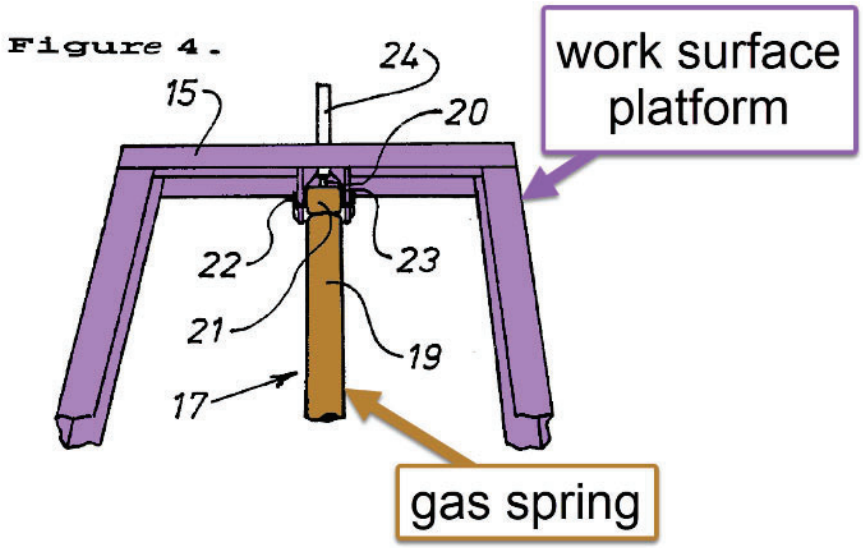

[101]

"An essential feature of the invention is that a blockable gas-spring 17, or piston-cylinder device is provided for enabling the position of the frame-like part 1 to be adjusted vertically in a smooth continuous fashion, both in an upward and in a downward direction. The gas-spring includes a bottom part 18 which is pivotally connected to the leg member 3 beneath the pivot rod 12, and an upper part 19 which is pivotally connected to the transverse frame-bar 15 on the same side of a vertical plane passing through the rod 12 as the lower part 18 (see also Figures 3, 4)." Lindahl 4:5-15

[101] Lindahl, Figure 1 & 4, Annotated

As shown above, Lindahl discloses the use of a gas spring to facilitate the movement of the scissor linkage. Specifically, the gas-spring cited is a locking gas-spring which as discussed previously is a well-known off-the-shelf component that any POSITA would be very familiar with. As Lindahl describes the locking gas spring is used to set the work surface platform at various heights in ordinary usage of the Lindahl apparatus. As discussed previously, Lindhal describes that any piston-cylinder actuator (an example of which is a locking gas spring) can be used with their machine. A POSITA will understand that a fluid power cylinder, such as used by Clarke is also a piston cylinder device that can be used to lock the vertical position of the platform at any height within its ordinary range of motion. A POSITA will understand that scissor lift mechanisms have a single degree of freedom and thus can be equivalently actuated by connecting an actuator between any two components that move relative to each other. For example, Lindahl as shown above connects a locking gas spring between the work surface platform and one of the arms of the first set of pivot arms. Clarke as shown in figure 2 connects the piston-cylinder style actuator between each of the arms in the first set of pivot arms. A POSITA will easily recognize this as a design choice and further that a scissor lift with equivalent performance could just as easily be configured with the cylinder connected between the pivot arm and the work surface platform as taught in Lindahl. In addition to this though, a POSITA would recognize that it would be more advantageous to mount the locking gas spring with the actuated end in a fixed relationship with the work surface platform as taught by Lindahl. For example, a POSITA will recognize that the locking gas spring handle is most advantageously placed on the work surface platform, which provides greater ease of use for adjustment as opposed to connecting it between the legs. Combining the placement of the air spring of Lindahl with the Clarke mechanism would yield this same convenience of handle position.	
1d7. wherein the gas spring is under the work surface platform and above the existing platform.	**YES:** Clarke in view of Lindahl discloses that the gas spring is under the work surface platform and above the existing platform.

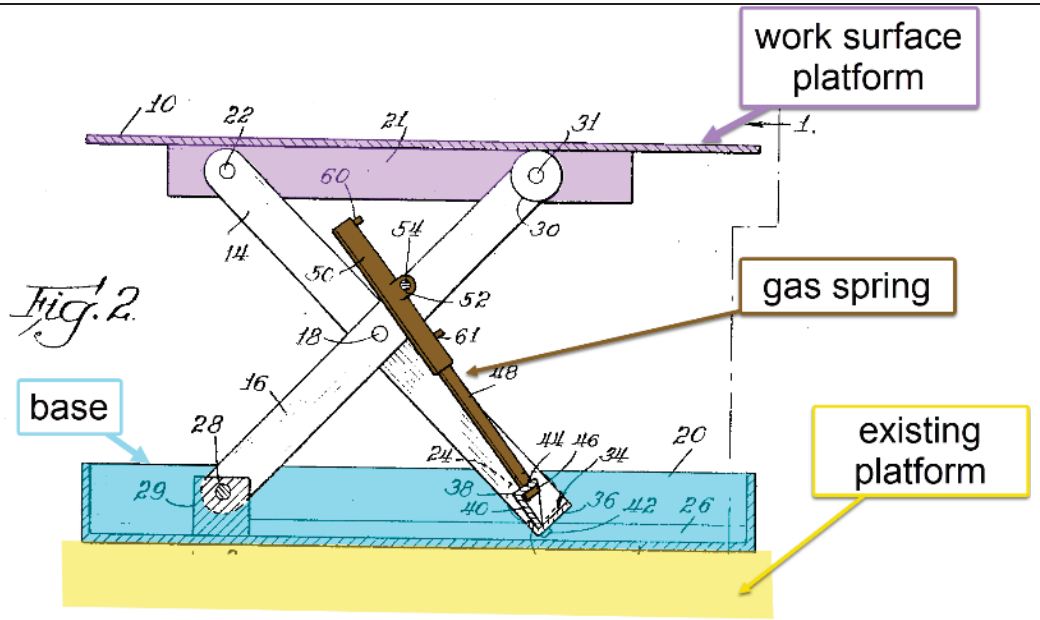

[102]

"Cylinder 50 has a side mounting plate 52 pivotally mounted on a rod 54. Rod 54 extends between the two opposite legs 16 to which it is connected. It is located at the side of the cylinder 50 opposite the pivotal mountings formed by studs 42. This rod 54 is at the upper side of the legs 16 above the common pivot 18 for the legs (FIGURE 4), and the mountings 52 extend downwardly. In the down position the cylinders will be entirely below the upper edges of the legs 16 to which they are connected." Clarke 2:32-41

As shown above, Clarke discloses a scissor lift platform with a gas spring. As can be seen in the figure above, the gas spring is located underneath the work surface platform. As can also be seen in the figure above, the gas spring is located above the existing platform.

[102] Clarke, Figure 2, Annotated

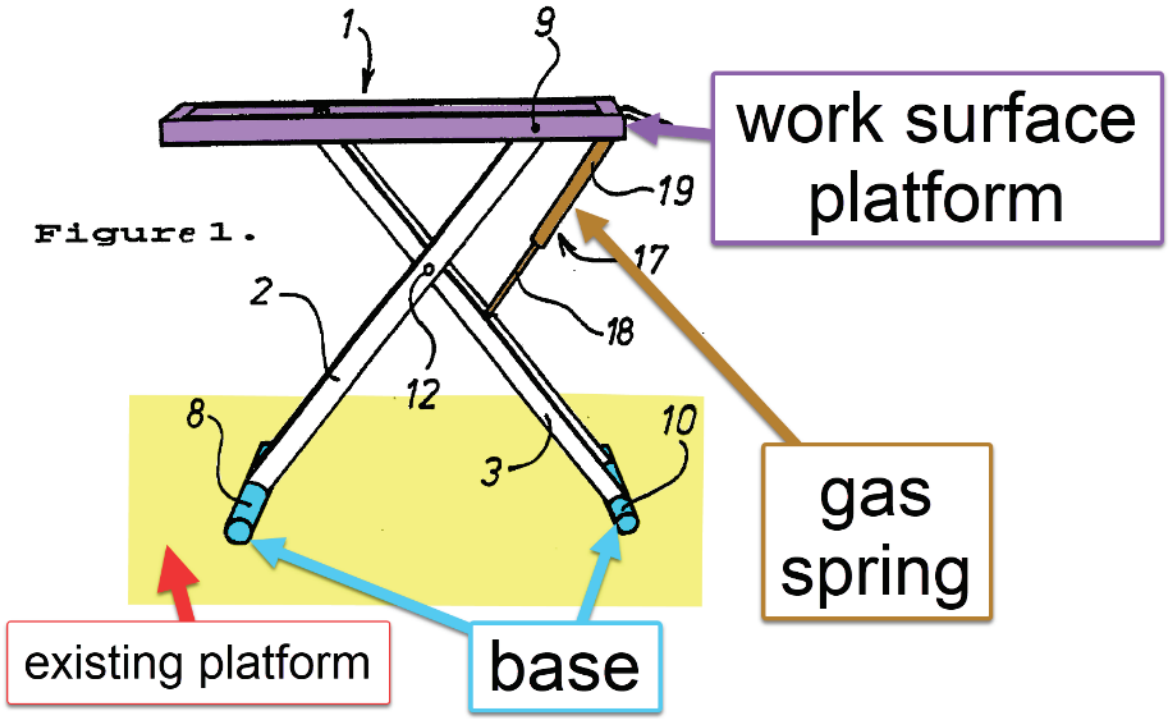

[103]

"The present invention relates to a table stand intended for use preferably in caravans and motorhomes, wherein the stand supports at the top thereof a frame-like part on which a tabletop is intended to be placed… Firstly the table is intended for use as a conventional dining table…" Lindahl 1:3-6, 13-14

"The stand includes a frame-like part 1 which is carried by two leg members 2, 3." Lindahl 3:1-3

"An essential feature of the invention is that a blockable gas-spring 17, or piston-cylinder device is provided for enabling the position of the frame-like part 1 to be adjusted vertically in a smooth continuous fashion, both in an upward and in a downward direction." Lindahl 4:5-9

As shown above, Lindahl discloses a scissor lift platform with a gas spring. As can be seen in the figure above, the gas spring is located underneath the work surface platform. As can also be seen in the figure above, the gas spring is located above the existing platform.

[103] Lindahl, Figure 1, Annotated

2P. The desktop workspace of claim 1,	**YES:** As shown above, Clarke in view of Lindahl, and in further view of HJ Zottel discloses the desktop workspace of claim 1.
2a. wherein the slidable tray is mounted to an underside of the work surface platform with a slider such that the slidable tray is selectively positionable between the stored position under the work surface platform and the extended position that is outward and lowered with respect to the work surface platform,	**YES:** Clarke in view of Lindahl and in further view of HJ Zottel discloses that the slidable tray is mounted to an underside of the work surface platform with a slider such that the slidable tray is selectively positionable between the stored position under the work surface platform and the extended position that is outward and lowered with respect to the work surface platform.

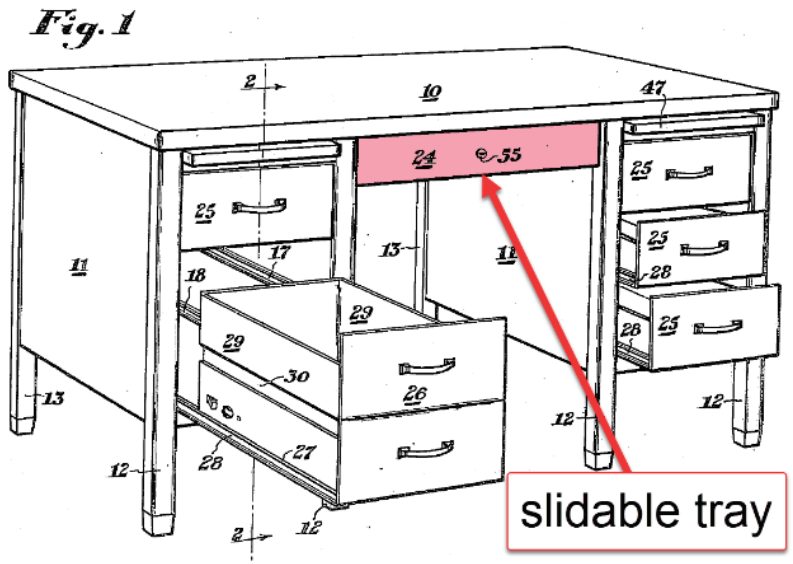

[104]

"The primary objects of the instant invention are to provide a desk having a plurality of box drawers and one or more vertical letter file drawers…" HJ Zottel 1:4-6

"The desk comprises a top 10 supported by drawer supporting pedestals 11 having front legs 12 and rear legs 13 attached thereto" HJ Zottel 1:47-50

"As best shown in Figure 1, the desk is provided with a center drawer 24 between the pedestals 11" HJ Zottel 2:9-11

[104] HJ Zottel Figure 1, annotated

As shown above, HJ Zottel discloses a slidable tray (drawer 24) which is mounted under the work surface platform (desk top 10). As discussed previously, when combining the teachigns of HJ Zottel with Clarke in view of Lindahl, a POSITA will be motivated to use a top-mount drawer style. This is because that is the only reasonable design choice for a POSITA to make with this particular arrangmenet as previously discussed. More generally, drawer mounting style is merely design choice. They can generally be on the bottom, on the side, or on the top with respect to the drawer. For example, US 5,294,087 to Drabczyk discloses an under-desk slider tray wherein the sliders mount directly to bottom of the desk top surface.

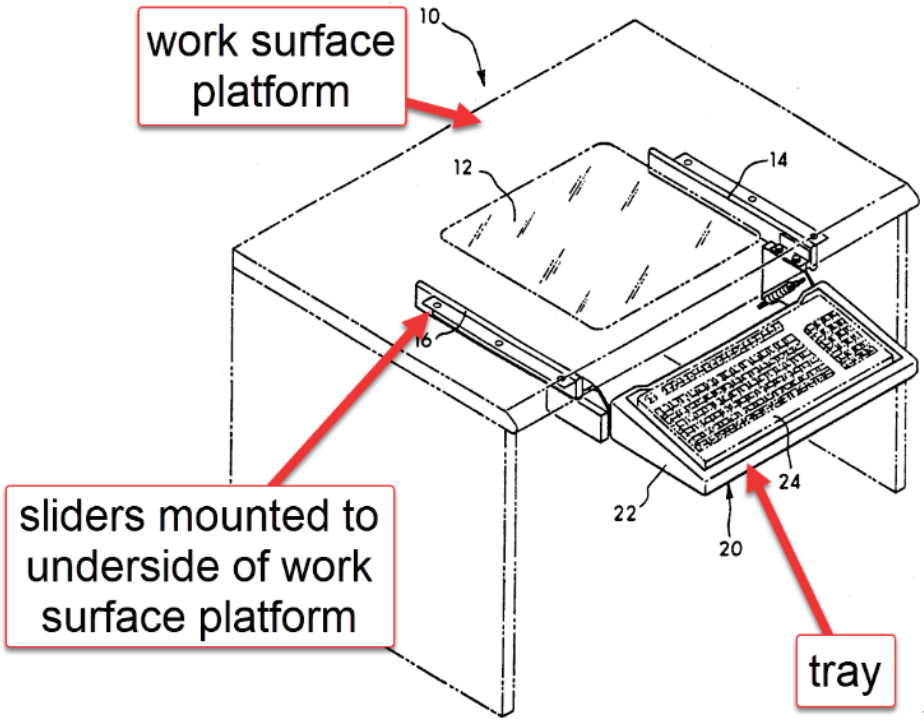

[105]

"Keyboard holder 20 is secured to workstation 10 to slide from an out of the way position beneath the top of workstation 10 to a working position as shown in FIG. 1. Keyboard holder 20, shown in FIG. 1, includes a molded plastic tray 22, which holds most types and sizes of keyboards 24." Drabczyk 3:36-41

[105] Drabczyk Figure 1, annotated

With or without the teachings of Drabczyk, the mounting of slides for drawers is so well-known that a POSITA will recognize the various ways this can be accomplished. Drawers have been known at least since the mid 1600's[106] and the various permutations and mounting styles are well known. A POSITA will further understand that drawers are a common feature that can be (and often is) added to any desk design, for instance the desktop shown in HJ Zottel. Thus, the addition of a drawer to mount under a desk top surface is not inventive in the slightest as this type of design has been well known at least for nearly the last 100 years, as demonstrated by HJ Zottel. Further, a POSITA will understand that drawers are commonly designed to slide in to a stored position or out into a open position. For example, Figure 1 of HJ Zottel shows drawer 24 in a stored position and drawer 26 slid out into an open position. As the tray is mounted to the underside of the work surface platform, a POSITA will further understand that when open, the bottom surface of the tray (drawer 24) will be outward and lowered with respect to the work surface platform.	
2b. wherein the slider includes a channel offset from the underside of the work surface platform, forming a gap between the slidable tray and the underside of the work surface platform.	**YES:** Clarke in view of Lindahl and in further view of HJ Zottel discloses that the slider includes a channel offset from the underside of the work surface platform, forming a gap between the slidable tray and the underside of the work surface platform.

[106] <https://www.penderynantiques.co.uk/the-history-of-the-chest-of-drawer/> accessed Dec 20, 2024

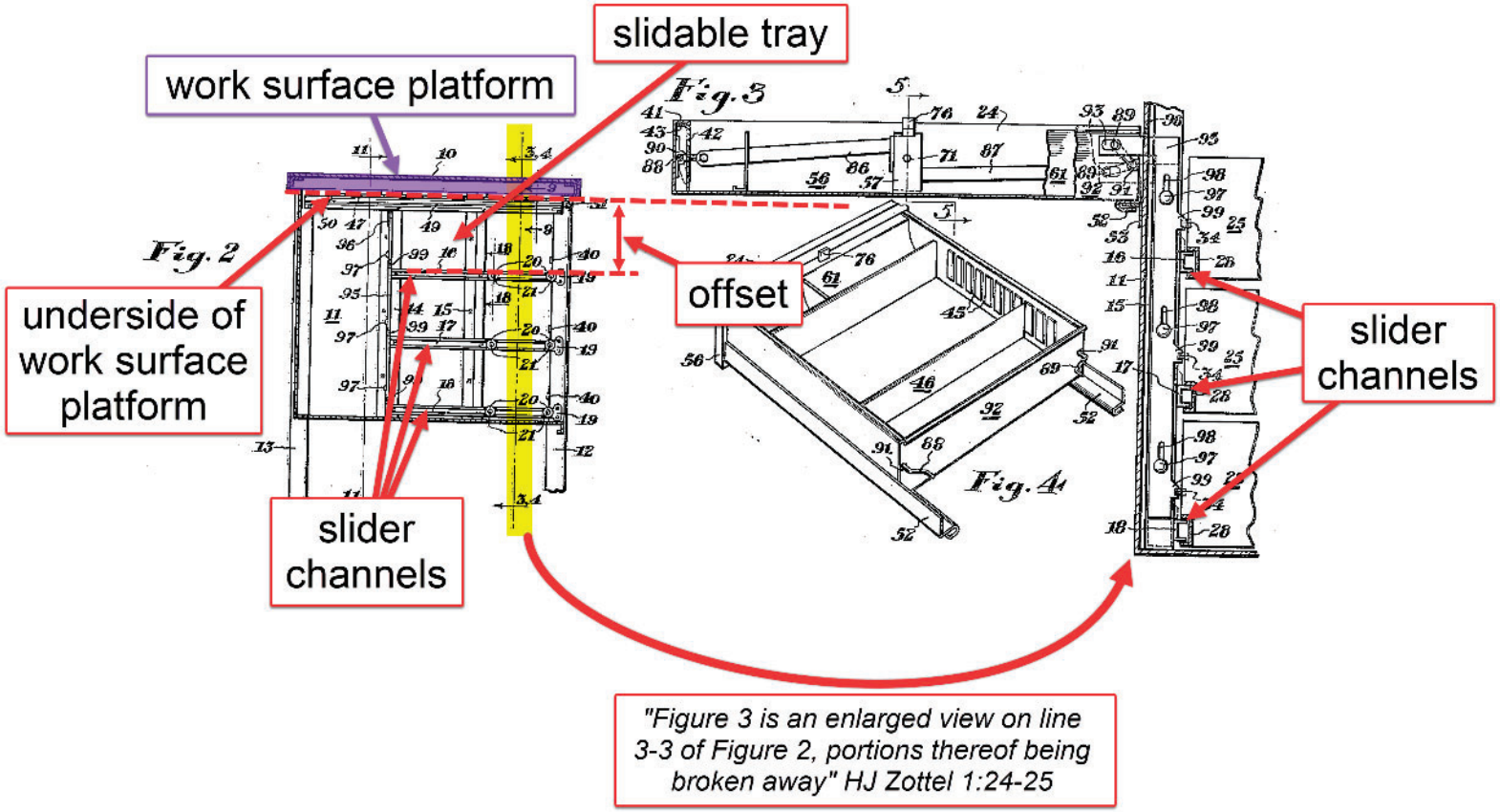

[107]

"Each drawer 25 and 26 is provded with a recess 27 along eah of its lower side edges and channel runners 28 are secured as by spot welding within each recess 27. The runners 28 of each drawer slidably engage a pair of drawer guides 16, 17 or 18 to thus slidably mount each drawer within a pedestal" HJ Zottel 2: 14-20

As shown above, HJ Zottel includes multiple channels (channel runners 28) that are offset from the underside of the work surface platform, forming a gap between the slidable tray and the underside of the work surface platform. As discussed previously, a POSITA will understand the well-known options and permutations of drawer designs and mounting. This includes, for example, mouting on the bottom, the side, or the top of the drawer. As discussed previously, a POSITA will be motivated to use a top-mounted drawer when adding the teachings of HJ Zottel

[107] HJ Zottel, Figures 2, 3, and 4, combined and annotated

to Clarke in view of Lindahl. When this is done, the channel runners as disclosed by HJ Zottel will be located more towards the top of the drawer as opposed to the bottom.

In addition to this, top-mounted drawers were well known; an example of which is shown in Drabczyk. In particular, Drabczyk Figure 2 shows that there is a channel offset from the underside of the work surface platform.

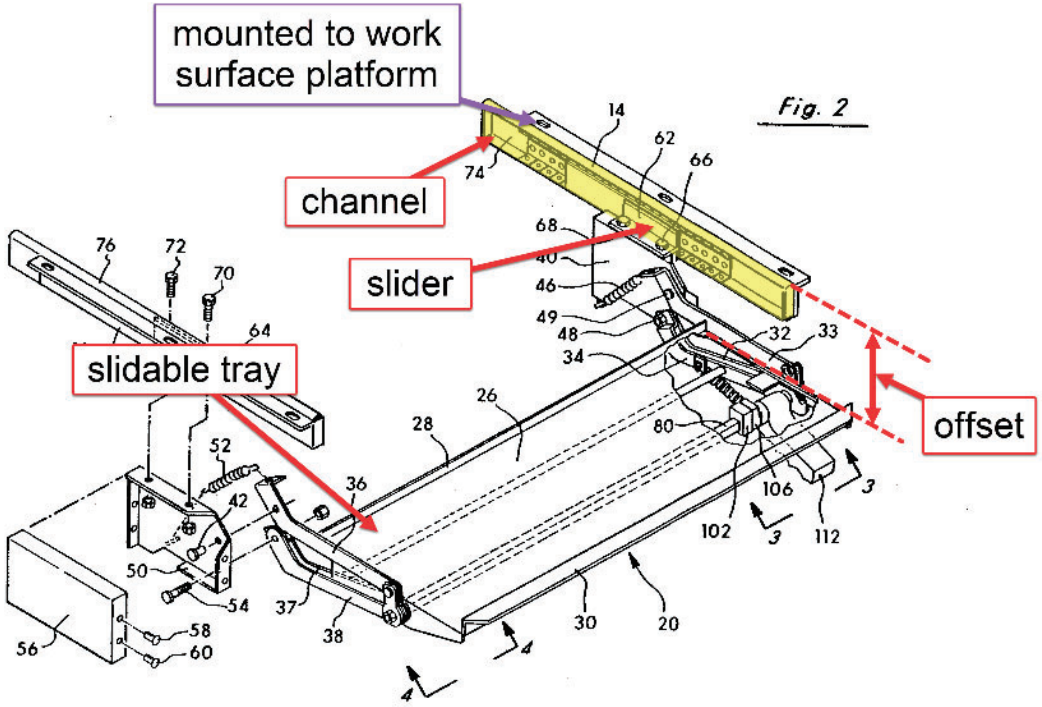

[108]

"Keyboard holder 20 is secured to workstation 10 to slide from an out of the way position beneath the top of workstation 10 to a working position as shown in FIG. 1. Keyboard holder 20, shown in FIG. 1, includes a molded plastic tray 22, which holds most types and sizes of keyboards 24." Drabczyk 3:36-41

"Mounting plates 40, 42 are affixed to slide brackets 62, 64, respectively by bolts 66-72. Slide brackets 62, 64 slide within extendible tracks 74, 76 on mounting brackets 14, 16. ***The design and operation of slide brackets 62, 64 and mounting brackets 14, 16 are conventional in***

[108] Drabczyk Figure 2, annotated

design and are not discussed in any further detail. *Thus, support tray 26, along with keyboard tray 22 and keybaord 24 are movable from an out of the way position beneath the upper surface of workstation 10 to a working position shown in FIG. 1." Drabczyk 3:65-4:6 (emphasis added)*

As shown above, Drabczyk demonstrates a well-known slidable tray arrangement wherein the slider has a channel which is offset from the underside of the work surface platform. This offset forms a gap between the slidable tray and the underside of the work surface platform. Further, I note that Drabczyk describes this arrangemnt as conventional in design, i.e. that it is well-known. Thus, as discussed before, a POSITA would understand with or without Drabczyk that drawers and slidable trays are reguarly mounted and arranged in this way.

3P. The desktop workspace of claim 2,	**YES:** As shown above, Clarke in view of Lindahl, and in further view of HJ Zottel and the knowledge of a POSITA discloses the desktop workspace of claim 2.
3a. further comprising a bracket fixed to the underside of the work surface platform, wherein the channel is mounted to the bracket such that the channel is offset from the underside of the work surface platform.	**YES:** Clarke in view of Lindahl and in further view of HJ Zottel and the knowledge of a POSITA, discloses comprising a bracket fixed to the underside of the work surface platform, wherein the channel is mounted to the bracket such that the channel is offset from the underside of the work surface platform.

As discsused previously, a POSITA will understand the ordinary and customary ways in which drawers are mounted include mounting on the bottom, the side, or the top. As discussed previously, when combining the teachigns of HJ Zottel with Clarke in view of Lindahl, a POISTA will be motivated to use a top-mounted drawer. When mounted to the top a POSITA will understand that this arrangement will generally include a bracket that mounts the slider channel to the underside of the work surface platform. This is a natural result in the ordinary course of well-known drawer mounting design.

In addition to this, as discussed previously, top-mounted drawers were well known; an example of which is shown in Drabczyk. In particular, Drabczyk Figure 2 shows that there is a channel offset from the underside of the work surface platform. Specifically, Drabczyk shows a bracket fixed to the underside of the work surface platform and a channel that is mounted to the bracket as shown below:

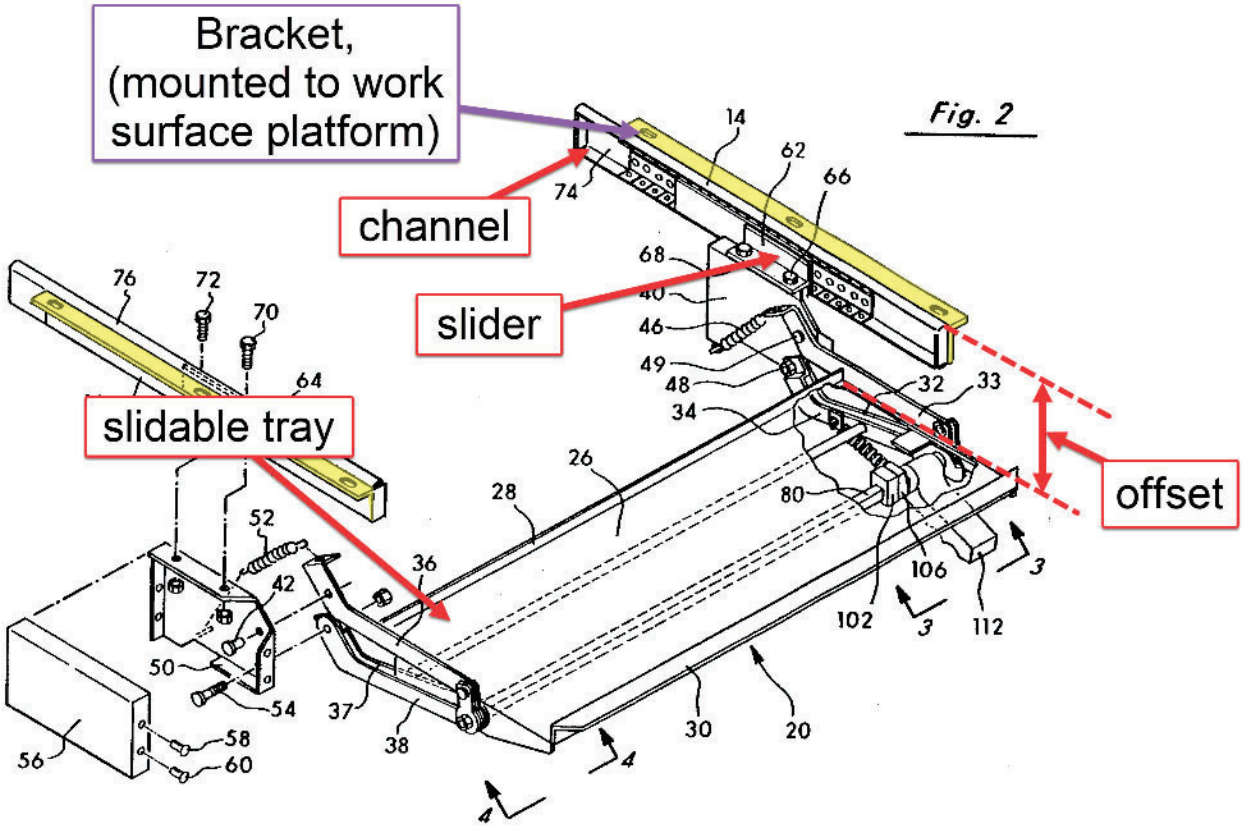

[109]

"Keyboard holder 20 is secured to workstation 10 to slide from an out of the way position beneath the top of workstation 10 to a working position as shown in FIG. 1. Keyboard holder 20, shown in FIG. 1, includes a molded plastic tray 22, which holds most types and sizes of keyboards 24." Drabczyk 3:36-41

"Mounting plates 40, 42 are affixed to slide brackets 62, 64, respectively by bolts 66-72. Slide brackets 62, 64 slide within extendible tracks 74, 76 on mounting brackets 14, 16. ***The design and operation of slide brackets 62, 64 and mounting brackets 14, 16 are conventional in design and are not discussed in any further detail.*** *Thus, support tray 26, along with keyboard tray 22 and keybaord 24 are movable from an*

[109] Drabczyk Figure 2, annotated

out of the way position beneath the upper surface of workstation 10 to a working position shown in FIG. 1." Drabczyk 3:65-4:6 (emphasis added) As shown above, Drabczyk demonstrates a well-known slidable tray arrangement wherein the slider has a bracket that is fixed to the underside of the work surface platform and fixed to the slider mechanism. This positions the slider channel to be offset from the underside of the work surface platform. This offset forms a gap between the slidable tray and the underside of the work surface platform. Further, I note that Drabczyk describes this arrangemnt as conventional in design, i.e. that it is well-known. Thus, as discussed before, a POSITA would understand with or without Drabczyk that drawers and slidable trays are reguarly mounted and arranged in this way and would have been motivated to do so.	
4P. The desktop workspace of claim 1,	**YES:** As shown above, Clarke in view of Lindahl, and in further view of HJ Zottel discloses the desktop workspace of claim 1.
4a. wherein the set of pivot arms is a first set of pivot arms, the desktop workspace further comprising:	**YES:** Both Clarke and Lindahl disclose a set up pivot arms that is a first set of pivots arms.
Clarke discloses a first set of pivot arms that connect at a scissoring pivot point creating a scissoring motion when raising and lowering the works surface platform to various heights. For example, the pivots arms and scissoring pivot point are shown below:	

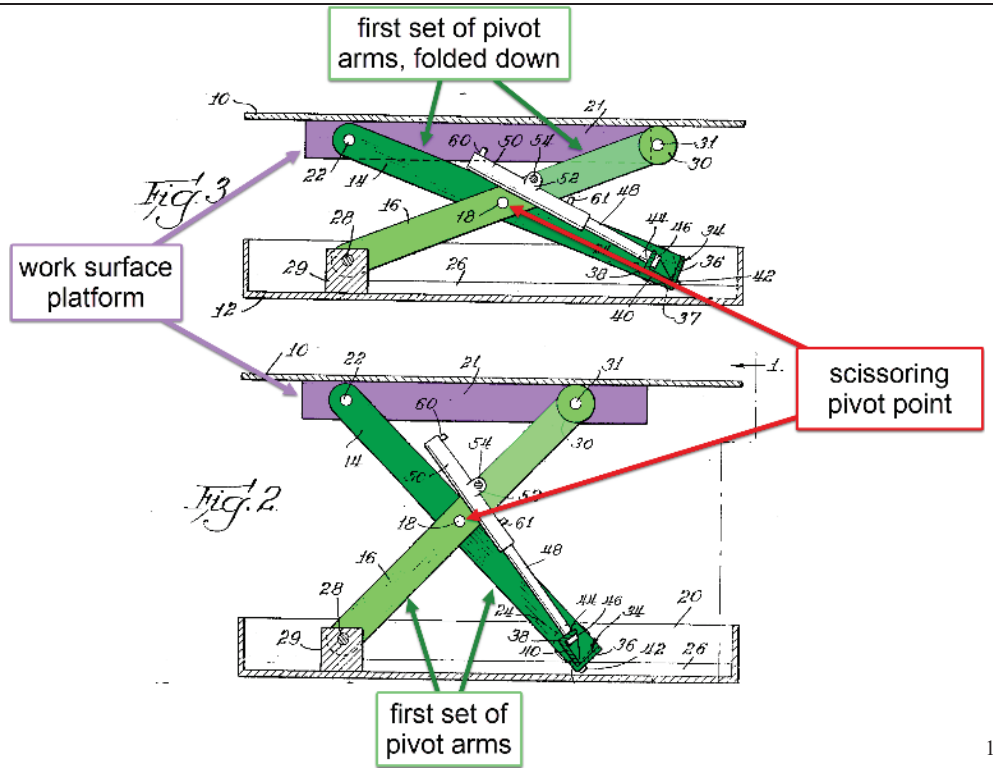

[110]

"Referring now more particularly to the drawings, the invention comprises a lift table having a top 10 and a base 12 connected by crossed scissors legs 14 and 16 at each side. Legs 14 and 16 are pivotally connected at 18." Clarke 1:67-70

As shown above, Clarke discloses a first set of pivot arms. These are connected in a linkage making a scissor mechanism which is used to lift the table and to set it at various heights. As the lifting mechanism is moved up and down, the pivot arms move with a scissoring motion. Between Figures 2 and 3 the same mechanism is shown in two different states of lift. By comparing the positions of the pivot arms, it can clearly be seen that scissoring motion takes place to move the lift mechanism from the position shown in Figure 2 to the position shown in Figure 3.

The pivot arms below are part of the height adjustment mechanism:

[110] Clarke, Figure 2 & 3, Annotated

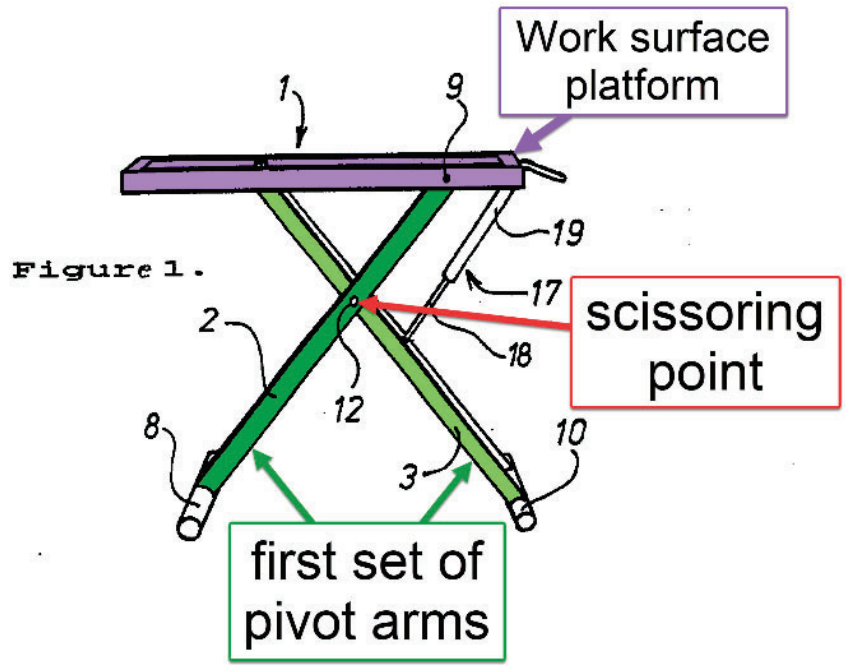

[111]

As shown above, Lindahl has a first set of pivot arms, items 2 and 3 above.

"Figures 1 and 2 illustrate the inventive stand. The stand includes a frame-like part 1 which is ***carried by two leg members 2, 3****. … **The two leg members 2, 3**, i.e. the pairs of bars 4, 5; 6, 7 **are mutually connected by means of a hinge means or pivot in the form of a transverse rod 12**, which extends through the bars approximately midway therealong the rods, preferably at a location which is slightly above centre. **This enables the two ends of respective pairs of bars 4, 5; 6, 7 to be moved towards and away from each other in a scissor-like fashion and therewith move the frame-like part 1 vertically.**"* (Lindahl 3:1-3, 11-20, emphasis added)

"The present invention relates to a table stand for use preferably in caravans and motorhomes, wherein the top of the stand is provided with a frame-like part on which a tabletop is intended to be placed and which is ***adjustable in the height direction so that the tabletop can be adjusted vertically to different positions****." Lindhal, Abstract*

[111] Lindahl Figure 1, annotated

As shown in the citations above, the Lindahl mechanism has a first set of pivot arms.

A POSITA would understand that scissor mechanisms are suitable for vertical lifting applications such as Clarke Lindahl. Scissor mechanisms are well-known and are very commonly built with two sets of pivots arms.

4a1. a second set of pivot arms; and	**YES:** Clarke and Lindahl discloses a second set of pivot arms.

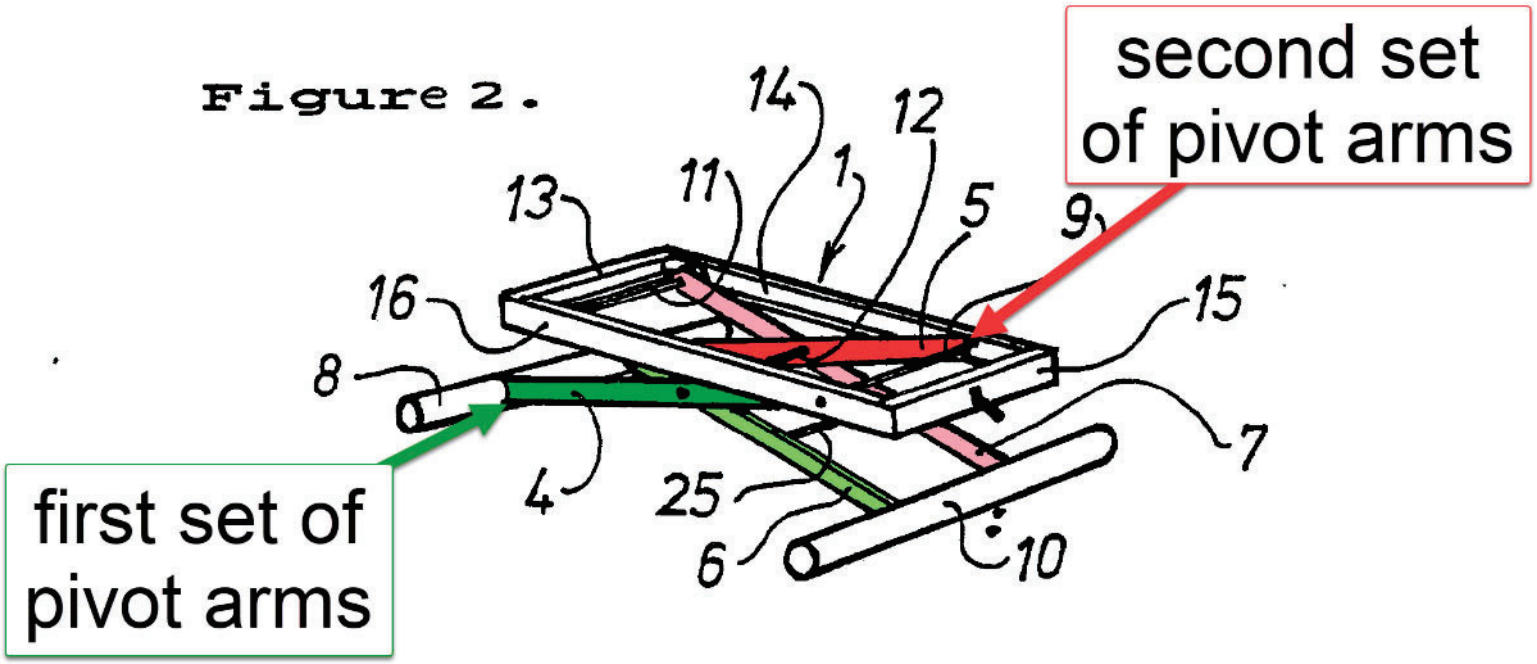

[112]

"…The pairs of bars 4, 5; 6, 7 are mutually connected by means of a hinge means or pivot in the form of a transverse rod 12, which extends through the bars approximately midway therealong the rods, preferably at a location which is slightly above centre. This enables the two ends of respective pairs of bars 4, 5; 6, 7 to be moved towards and away from each other in a scissor-like fashion and therewith move the frame-like part 1 vertically." (Lindahl 3:12-20)

[112] Lindahl, Figure 2, Annotated

As shown above Lindahl has a first and a second set of pivot arms. They are connected to each other and move in a scissor-like fashion. A POSITA will understand that this is a scissor lift mechanism of typical and ordinary design. A POSITA will further understand and be familiar with the fact that scissor lift mechanisms such as a common scissor lift machine or even this small table as disclosed by Lindahl are commonly built with a pair of scissoring links. This provides lateral stability to the machine over what would be typical of a single set of scissoring links.

Clarke also discloses a first and a second set of pivot arms as shown below:

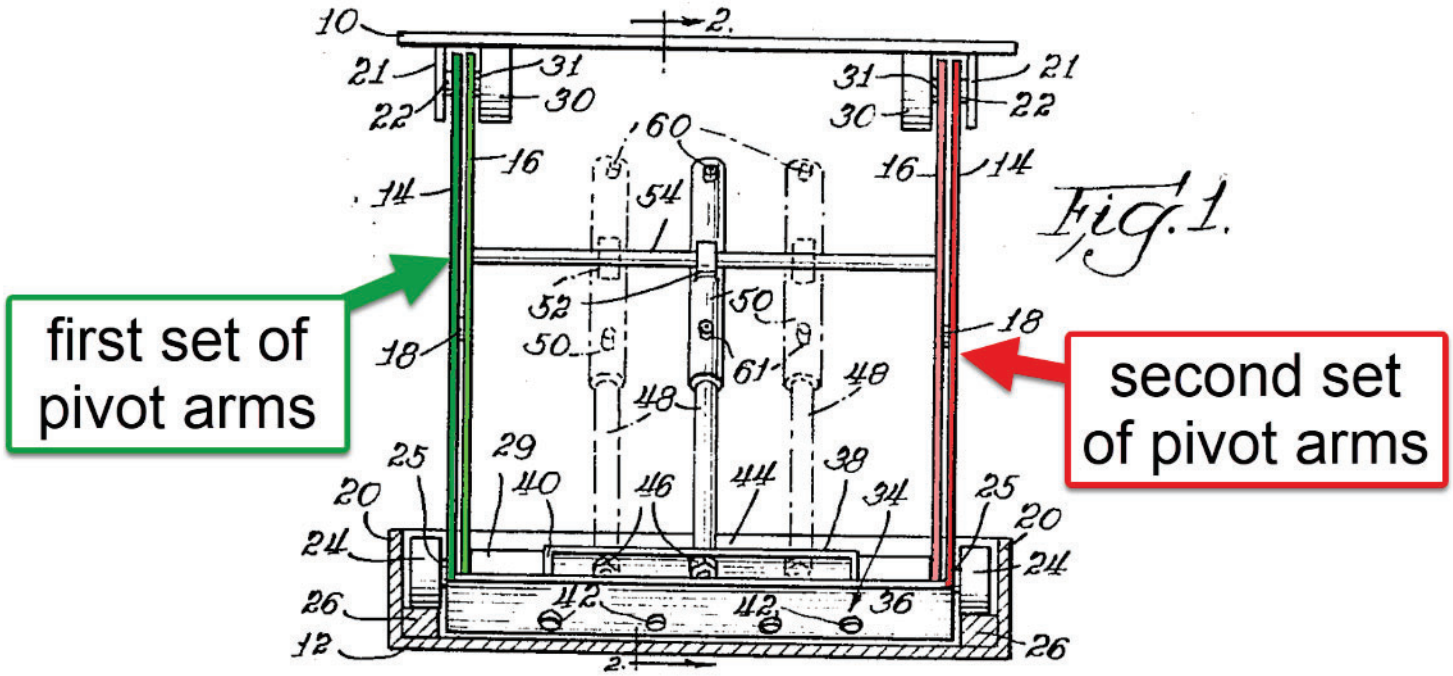

[113]

"Referring now more particularly to the drawings, the invention comprises a lift table having a top 10 and a base 12 connected by crossed scissors legs 14 and 16 at each side. Legs 14 and 16 are pivotally connected at 18." Clarke 1:67-70

4a2. an element that connects the first set of pivot arms to the second set of pivot arms.	**YES:** Clarke and Lindahl discloses an element that connects the first set of pivot arms to the second set of pivot arms.

[113] Clarke Figure 1, annotated

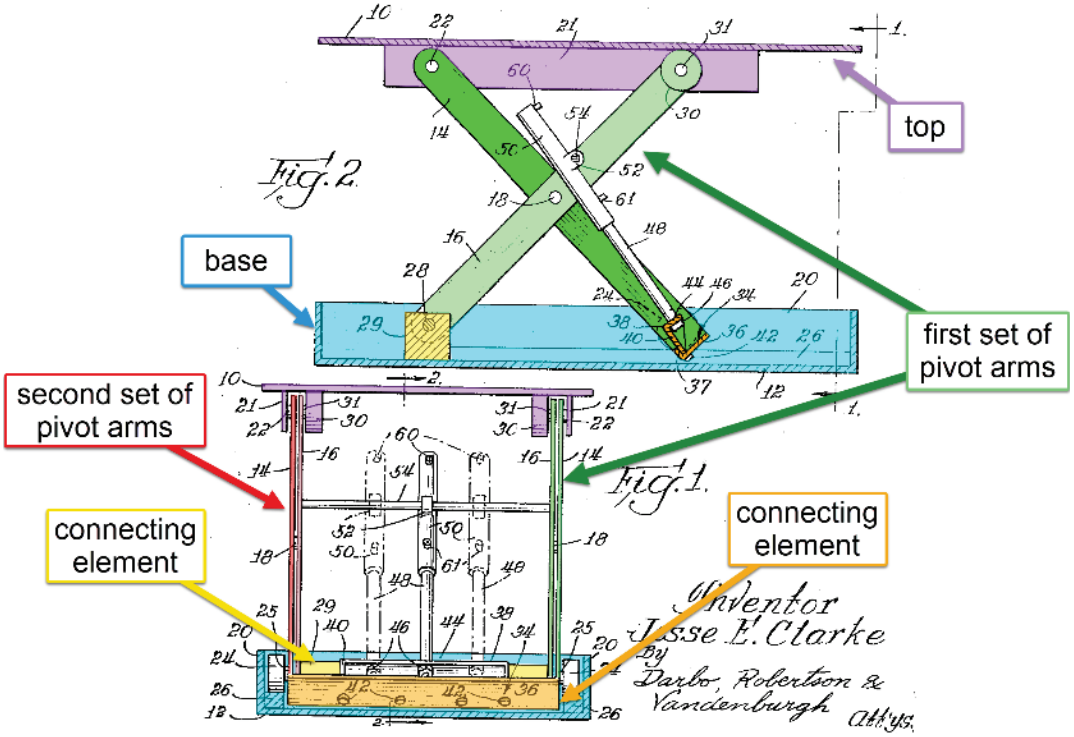

[114]

"Attached to the roller ends of the outer legs 14 is a cross piece 34 which may be in the form of an angle bar having one web 36 extending across the bottom ends of legs 14 with a shorter web 37 normal thereto." Clarke 2:15-18

"Depending from the top, at each side, is a plate 21. A pivot 22 near one end of the plate 21 connects the upper end of the leg 14 to the plate. Leg 14 has a roller 24 rotatably mounted at the other end on shaft 25. Roller 24 rides on the upper surface of a strip 26 in the bottom of one side of the base 12. One end of the other leg 16 has a pivot 28 connecting it to a support block 29 directly below the pivot 22 for the leg 14." Clarke 2:3-10

[114] Clarke Figures 1 & 2, Annotated

As shown above, Clarke discloses multiple elements that connects the first set of pivot arms to the second set of pivot arms. These include the pivot joint on the top frame (item 22), the angle bars at the bottom of the pivot arms (item 34 shown in orange), and the base pivot joint (item 28) via the support block (item 29 shown in yellow).

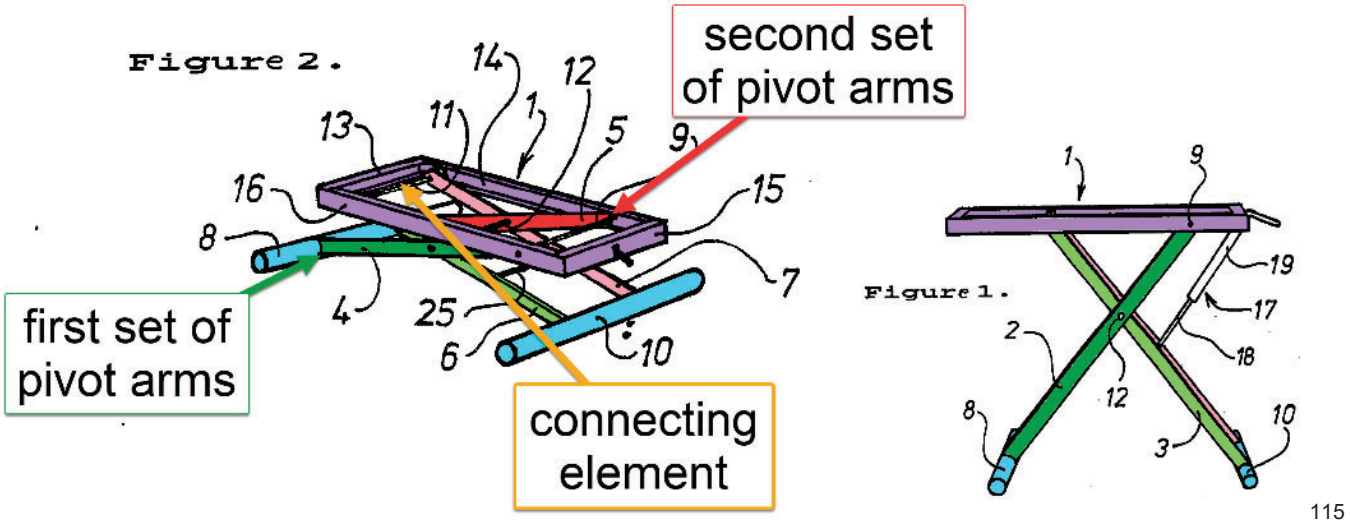

[115]

"…The pairs of bars 4, 5; 6, 7 are mutually connected by means of a hinge means or pivot in the form of a transverse rod 12, which extends through the bars approximately midway therealong the rods, preferably at a location which is slightly above centre. This enables the two ends of respective pairs of bars 4, 5; 6, 7 to be moved towards and away from each other in a scissor-like fashion and therewith move the frame-like part 1 vertically." (Lindahl 3:12-20)

*"Each leg member 2, 3 includes two substantially parallel rods or bars 4, 5; 6, 7, **wherein the two bars of each pair of bars are spaced from one another and are connected together at both ends thereof by means of a respective transverse rod 8, 9; 10, 11**; wherein the lowermost transverse rods 8; 10 function to support the stand against the underlying support surface …" Lindahl 3:3-10 (emphasis added)*

As shown above, Lindahl also discloses multiple elements that connects the first set of pivot arms to the second set of pivot arms. For example, transverse rod 11 connects the first and second set of pivot arms to each other. Further, transverse rod 12 extends between the sets of pivot

[115] Lindahl Figure 1 and 2, combined and annotated

arms, connecting them. Further the top frame (item 1) and associated pivots also connect the first and second scissor linkages to each other. Further still, the transverse rods 8, and 10 of Lindahl connect the first set of pivot arms to the second set of pivot arms. A POSITA will understand that these connecting elements are a typical and ordinary part of the design for scissor lift mechanisms and any one of these components in both Clarke and Lindahl are elements that connect the first set of pivot arms to the second set of pivot arms.	
5P. The desktop workspace of claim 1,	**YES:** As shown above, Clarke in view of Lindahl, and in further view of HJ Zottel discloses the desktop workspace of claim 1.
5a. wherein the work surface platform forms an upper work surface, and	**YES:** Both Clarke and Lindahl disclose that the work surface platform forms an upper work surface.

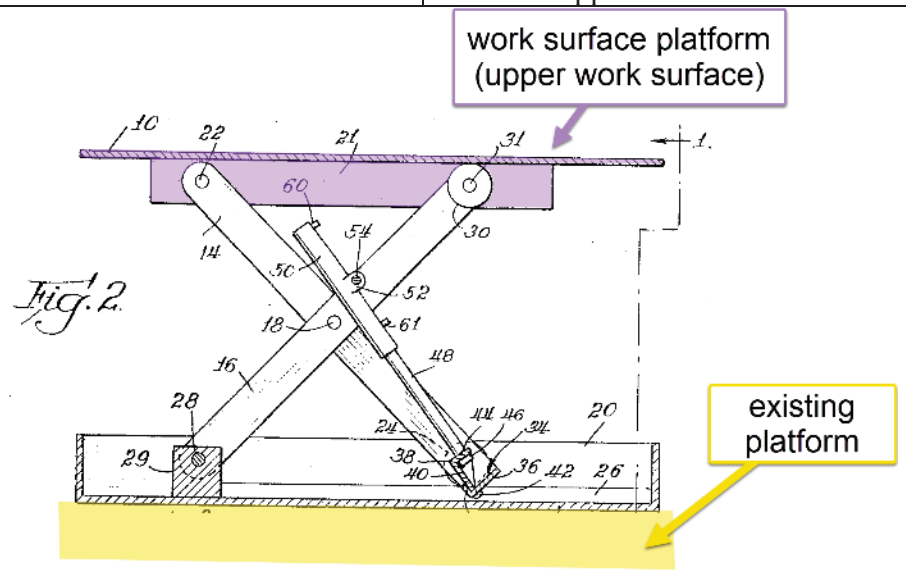

[116]

"Referring now more particularly to the drawings, the invention comprises a lift table having a top 10 and a base 12 connected by crossed scissors legs 14 and 16 at each side. Legs 14 and 16 are pivotally connected at 18." Clarke 1:67-70

[116] Clarke, Figure 2, Annotated

As shown above Clarke is a table which has a work surface platform (i.e. the table top). Further, there is an existing platform that Clarke is set on. Like essentially ALL tables, the work surface platform is positioned above the floor, and is therefore "upper." This is the basic form and function of a table in the first place.

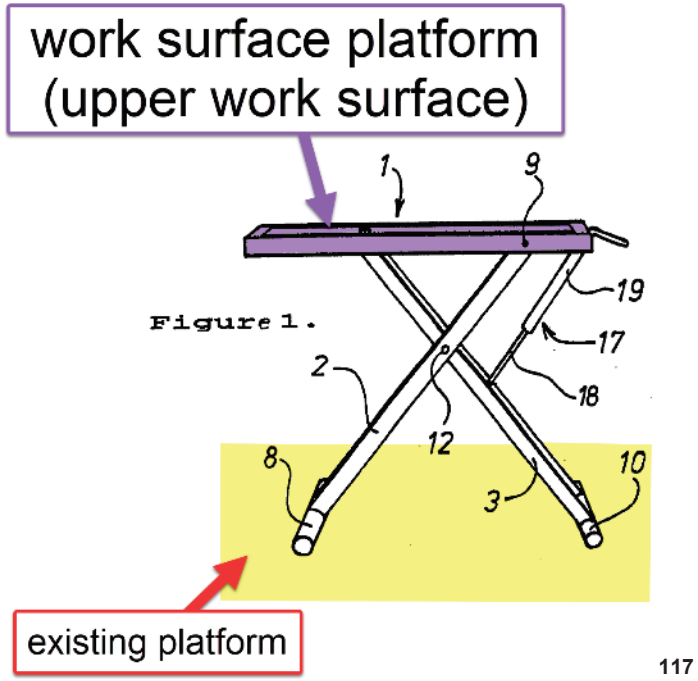

[117]

"The present invention relates to a table stand intended for use preferably in caravans and motorhomes, wherein the stand supports at the top thereof a frame-like part on which a tabletop is intended to be placed… Firstly the table is intended for use as a conventional dining table…" Lindahl 1:3-6, 13-14

"The stand includes a frame-like part 1 which is carried by two leg members 2, 3." Lindahl 3:1-3

"Each leg member 2, 3 includes two substantially parallel rods or bars 4, 5; 6, 7, wherein the two bars of each pair of bars are spaced from one another and are connected together at both ends thereof by means of a respective transverse rod 8, 9; 10, 11, wherein the lowermost transverse rods 8; 10 function to support the stand against the underlying support surface…" Lindahl 3:3-10

[117] Lindahl, Figure 1, Annotated

As shown above Lindahl is a table which has a work surface platform (i.e. the table top). Further, there is an existing platform that Lindahl is set on. Like essentially ALL tables, the work surface platform is positioned above the floor, and is therefore "upper." This is the basic form and function of a table in the first place. Even if it is argued that Lindahl shows a frame but the figures do not show the upper work surface per se, the above citation makes it clear that, "a tabletop is intended to be placed" on the frame member of Lindahl which itself is part of the work surface platform and is an upper work surface. Thus, both Clarke and Lindahl demonstrate that their respective work surface platforms form upper work surfaces.	
5b. wherein the gas spring is completely covered by a profile of the work surface platform when viewed from above the upper work surface relative to the base, the profile of the work surface platform being defined by an outer perimeter of the upper work surface.	**YES:** Both Clarke and Lindahl disclose that the gas spring (or piston cylinder device) is completely covered by a profile of the work surface platform when viewed from above the work surface relative to the base, the profile of the work surface platform being defined by an outer perimeter of the upper work surface.

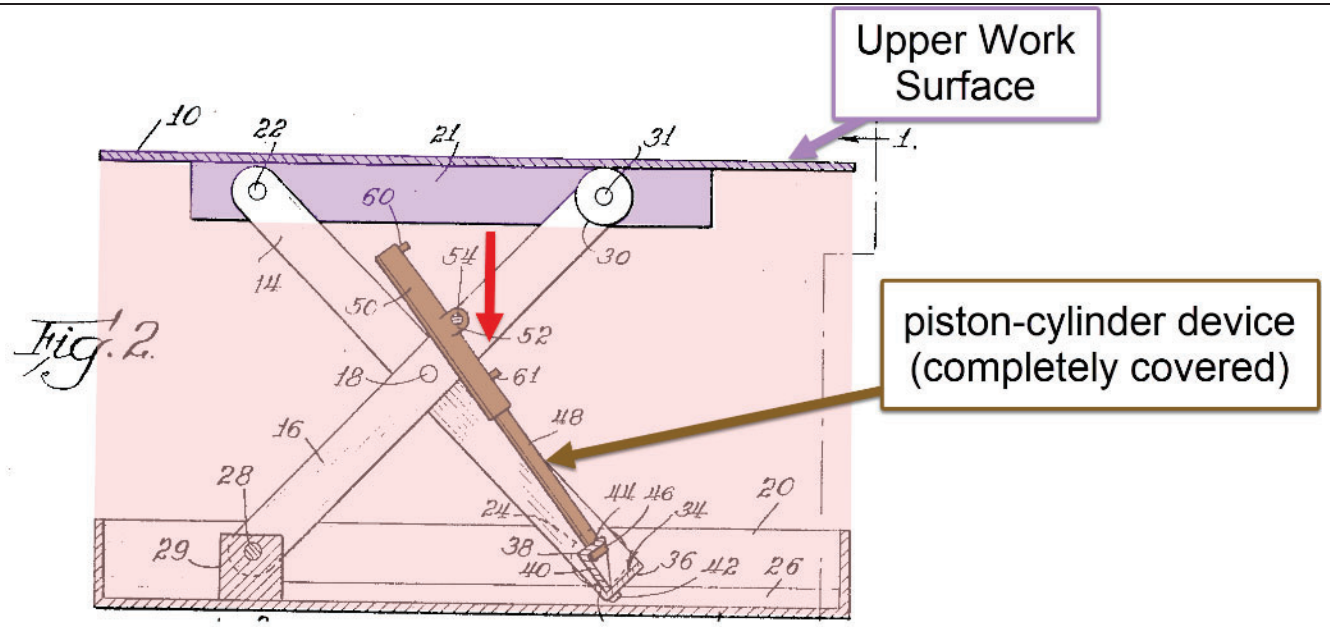

[118]

As discussed previously, Clarke uses a hydraulic cylinder which is a different type of piston cylinder actuator. However, as discussed previously, a POSITA would understand that from a design point of view, a gas spring can be installed in place of a hydraulic cylinder. The two devices are different in their behavior and certain applications may show that one is favorable over the other. Nevertheless, both a gas spring and a hydraulic cylinder a piston-cylinder devices and both can exert outward forces by extending under pressure. Thus, supposing that the hydraulic cylinder of Clarke was to be replaced with a gas spring to assist in the lift of an otherwise manually lifted table, such a substitution would be arranged such that the gas spring is completely covered by a profile of the work surface platform when viewed from above.

[118] Clarke, Figure 2, Annotated

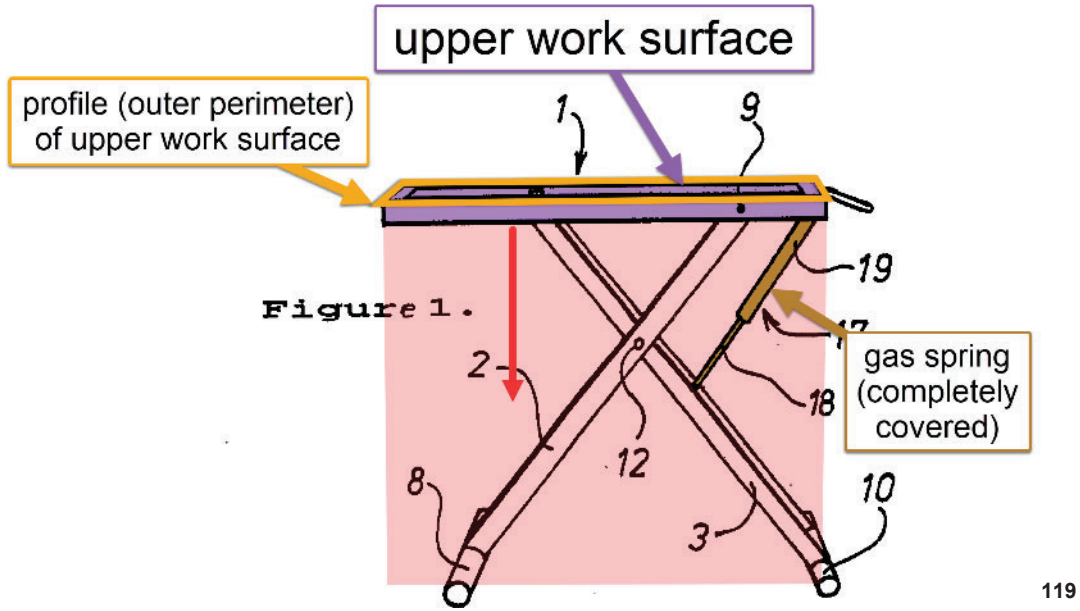

[119]

"The present invention relates to a table stand intended for use preferably in caravans and motorhomes, wherein the stand supports at the top thereof a frame-like part on which a tabletop is intended to be placed… Firstly the table is intended for use as a conventional dining table…" Lindahl 1:3-6, 13-14

"An essential feature of the invention is that a blockable gas-spring 17, or piston-cylinder device is provided for enabling the position of the frame-like part 1 to be adjusted vertically in a smooth continuous fashion, both in an upward and in a downward direction." Lindahl 4:5-9

As shown above and as discussed previously, Lindahl discloses an upper work surface and a gas spring. Further, the profile that is defined as the outer perimeter of the upper work surface is larger than and completely covers the gas spring below. Even if it is argued that Lindahl shows a frame but the figures do not show the upper work surface per se, the above citation makes it clear that, "a tabletop is intended to be placed" on the frame member of Lindahl which itself is part of the work surface platform and is a upper work surface. In order to avoid creating pinch points, a POSITA will understand that the table top that is added to the upper frame will be at least as broad as the frame that supports it.

6P. The desktop workspace of claim 1,	**YES:** As shown above, Clarke in view of Lindahl, and in further view of HJ Zottel discloses the desktop workspace of claim 1.

[119] Lindahl, Figure 1, Annotated

6a. wherein the gas spring is a first spring,	**YES:** Clarke and Lindahl discloses a gas spring that is a first spring.

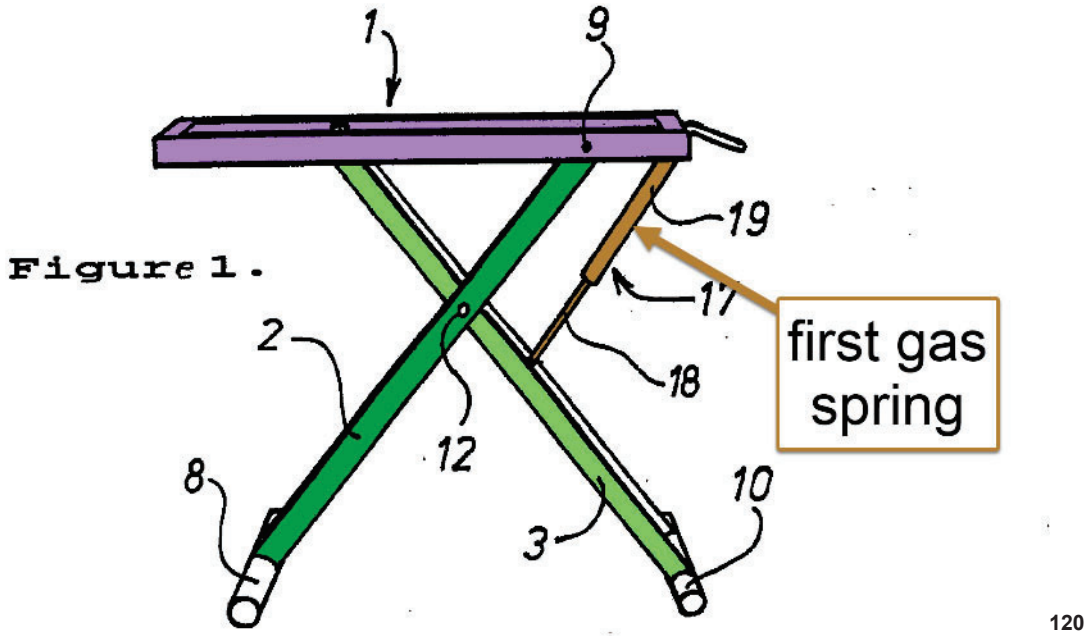

[120]

"An essential feature of the invention is that a blockable gas-spring 17, or piston-cylinder device is provided for enabling the position of the frame-like part 1 to be adjusted vertically in a smooth continuous fashion, both in an upward and in a downward direction. The gas-spring includes a bottom part 18 which is pivotally connected to the leg member 3 beneath the pivot rod 12, and an upper part 19 which is pivotally connected to the transverse frame-bar 15 on the same side of a vertical plane passing through the rod 12 as the lower part 18 (see also Figures 3, 4)." Lindahl 4:5-15

As shown above, Lindahl discloses a first gas spring (i.e. blockable gas-spring 17). As discussed previously Clarke uses a piston cylinder device that can easily be replaced with a gas spring for manual actuation. Thus, Clarke in view of Lindahl incorporates a first gas spring.

6b. the desktop workspace comprising a pair of springs attached to the height adjustment mechanism to assist in the elevation of the	**YES:** A POSITA would recognize the addition of a second gas spring as an ordinary design choice such that the desktop workspace comprises a pair of springs attached to the height adjustment mechanism to assist in

[120] Huang, Figure 3, Annotated

work surface platform, the pair of springs including the first spring and a second spring.	the elevation of the work surface platform, the pair of spring including the first spring and a second spring. In addition to this, Clarke in view of Lindahl, and in further view of Clark and other references such as CN203934825 to Zhang discloses a second gas spring such that the desktop workspace comprises a pair of springs attached to the height adjustment mechanism to assist in the elevation of the work surface platform, the pair of springs including the first spring and a second spring.

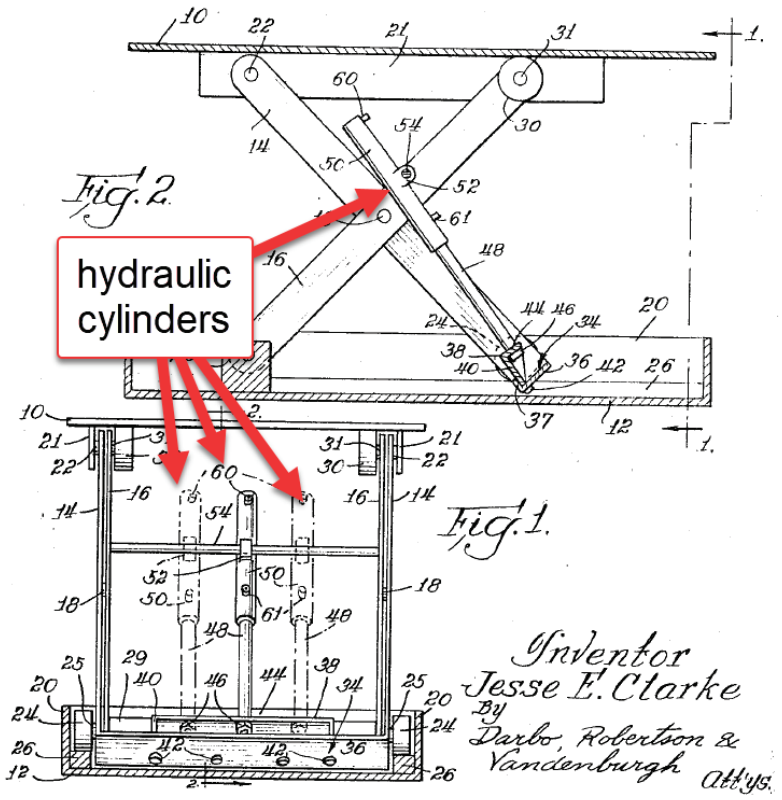

[121]

[121] Clarke, Figure 1 & 2, Annotated

"To supply air or fluid pressure, each cylinder 50 is provided with an inlet 60 near its outer end to which some suitable connection (not shown) is made." Clarke 2:67-69 *"In this invention, a lift table with a completely closed scissor linkage is raised by one or more hydraulic cylinders, depending on the lifting force necessary." US 3,282,566 to Clarke 1:56-59* A POSITA would recognize that having multiple actuators for lifting the scissor lift linkage is well-known and customary. For example, Clarke discloses a scissor lift platform with three fluid power cylinders acting in parallel.	
7. The desktop workspace of claim 1,	**YES:** As shown above, Clarke in view of Lindahl, and in further view of HJ Zottel discloses the desktop workspace of claim 1.
7a. wherein the sliding mechanism is a first sliding mechanism, **7b.** the desktop workspace further comprising a second sliding mechanism,	**YES:** Clarke in view of Lindahl discloses that the sliding mechanism is a first sliding mechanism. Further this combination discloses that there is a second sliding mechanism.

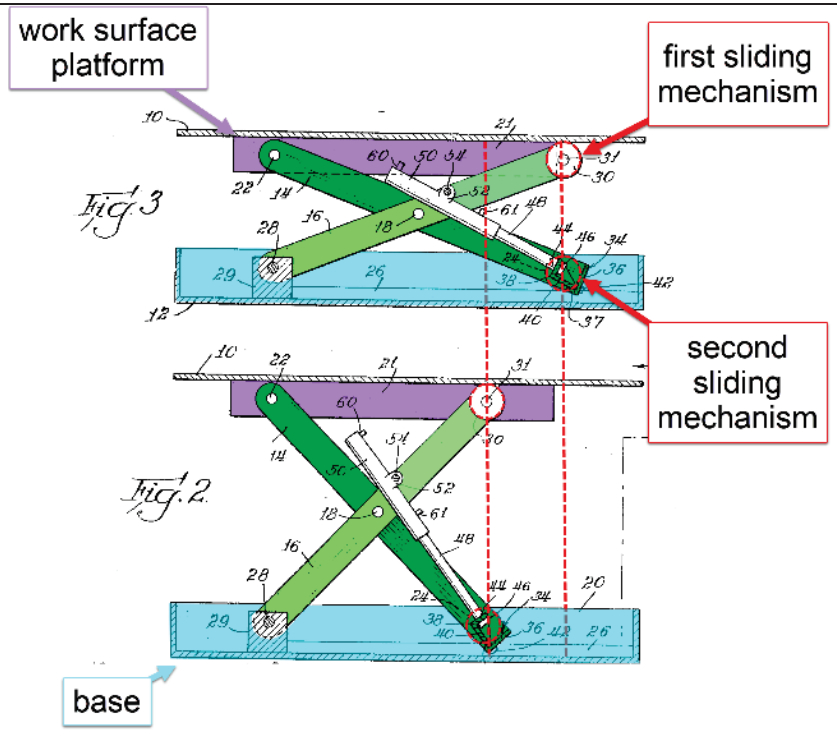

122

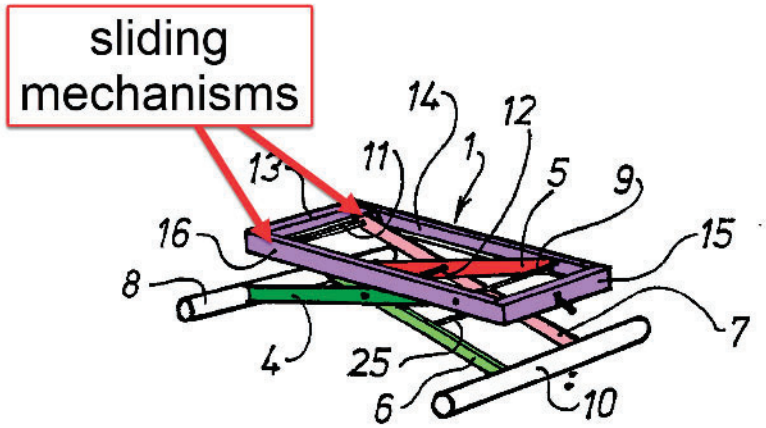

123

"Depending from the top, at each side, is a plate 21. A pivot 22 near one end of the plate 21 connects the upper end of the leg 14 to the plate. Leg 14 has a roller 24 rotatably mounted at the other end on shaft 25. ***Roller 24 rides on the upper surface of a strip 26*** *in the bottom of one side of the base 12. One end of the other leg 16 has a pivot 28 connecting it to a support block 29 directly below the pivot 22 for the leg 14.* ***A roller 30 mounted on shaft 31 at the other end of leg 16 rides on the underside of the table top 10****. The legs are closely folded together by the pivot 18 intermediate their ends, for parallel scissor action between the base and the top." Clarke 2:3-14 (emphasis added)*

"The one rod 9 is pivotally mounted in the bars 14, 15, whereas the other ***transverse rod 11 is provided at both ends with suitable means for sliding in the U-shaped part of the bars*** *in order to achieve the aforesaid scissor-like movement of the leg members." Lindahl 3:31-4:3 (emphasis added)*

[122] Clarke, Figures 2 & 3, Annotated
[123] Lindahl, Figure 2, Annotated

As shown above, both Clarke and Lindahl have a first sliding mechanism, which is what allows the top portion of the scissor links to translate relative to the work surface platform. In addition to this, Clarke discloses a second sliding mechanism that is operable between the pivot arms and the base. Again, this is typical scissor linkage design that any POSITA would readily understand is ubiquitous.	
7c. wherein either the first sliding mechanism or the second sliding mechanism is attached or slides along the work surface platform, **7d.** and the other of the first sliding mechanism and the second sliding mechanism is attached to or slides along the base.	**YES:** Clarke in view of Lindahl discloses that either the first or the second sliding mechanism is attached or slides along the work surface platform. Further, the other first and second sliding mechanism is attached to or slides along the base.

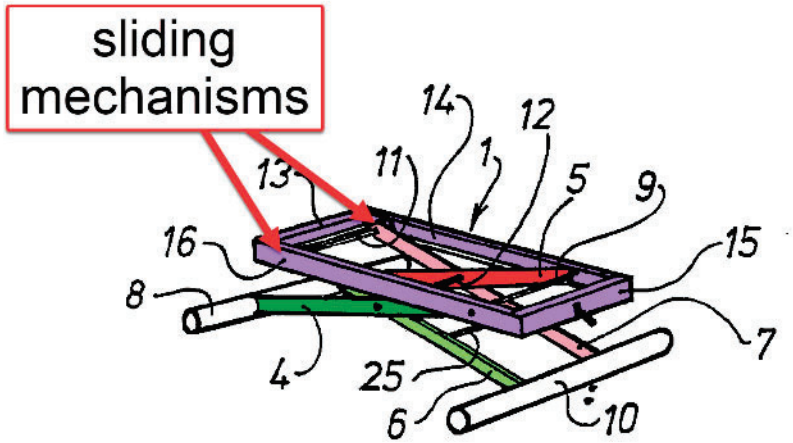

124

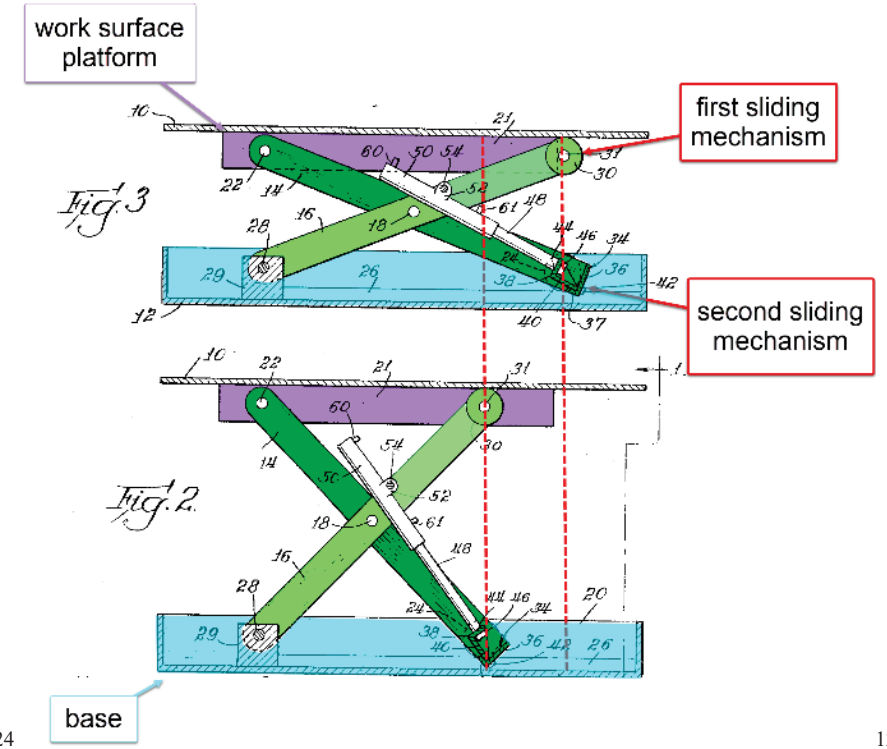

125

[124] Lindahl, Figure 2, Annotated
[125] Clarke, Figure 2 & 3, Annotated

"Depending from the top, at each side, is a plate 21. A pivot 22 near one end of the plate 21 connects the upper end of the leg 14 to the plate. Leg 14 has a roller 24 rotatably mounted at the other end on shaft 25. ***Roller 24 rides on the upper surface of a strip 26 in the bottom of one side of the base*** *12. One end of the other leg 16 has a pivot 28 connecting it to a support block 29 directly below the pivot 22 for the leg 14.* ***A roller 30 mounted on shaft 31 at the other end of leg 16 rides on the underside of the table top 10****. The legs are closely folded together by the pivot 18 intermediate their ends, for parallel scissor action between the base and the top." Clarke 2:3-14 (emphasis added)* *"The one rod 9 is pivotally mounted in the bars 14, 15, whereas the other* ***transverse rod 11 is provided at both ends with suitable means for sliding in the U-shaped part of the bars*** *in order to achieve the aforesaid scissor-like movement of the leg members." Lindahl 3:31-4:3 (emphasis added)* As shown above, both Clarke and Lindahl show that the first sliding mechanism(s) are attached to or slide along the work surface platform. Further, Clarke has a second sliding mechanism (item 24 as shown above) that is attached to or slides along the base.	
8P. The desktop workspace of claim 1,	**YES:** As shown above, Clarke in view of Lindahl, and in further view of HJ Zottel discloses the desktop workspace of claim 1.
8a. wherein the scissoring motion when raising and lowering the work surface platform to various heights of the height adjustment mechanism moves the work surface platform in a straight vertical direction relative to the base.	**YES:** Clarke discloses that the scissoring motion when raising and lowering the work surface platform to various heights of the height adjustment mechanism moves the work surface platform in a straight vertical line relative to the base.

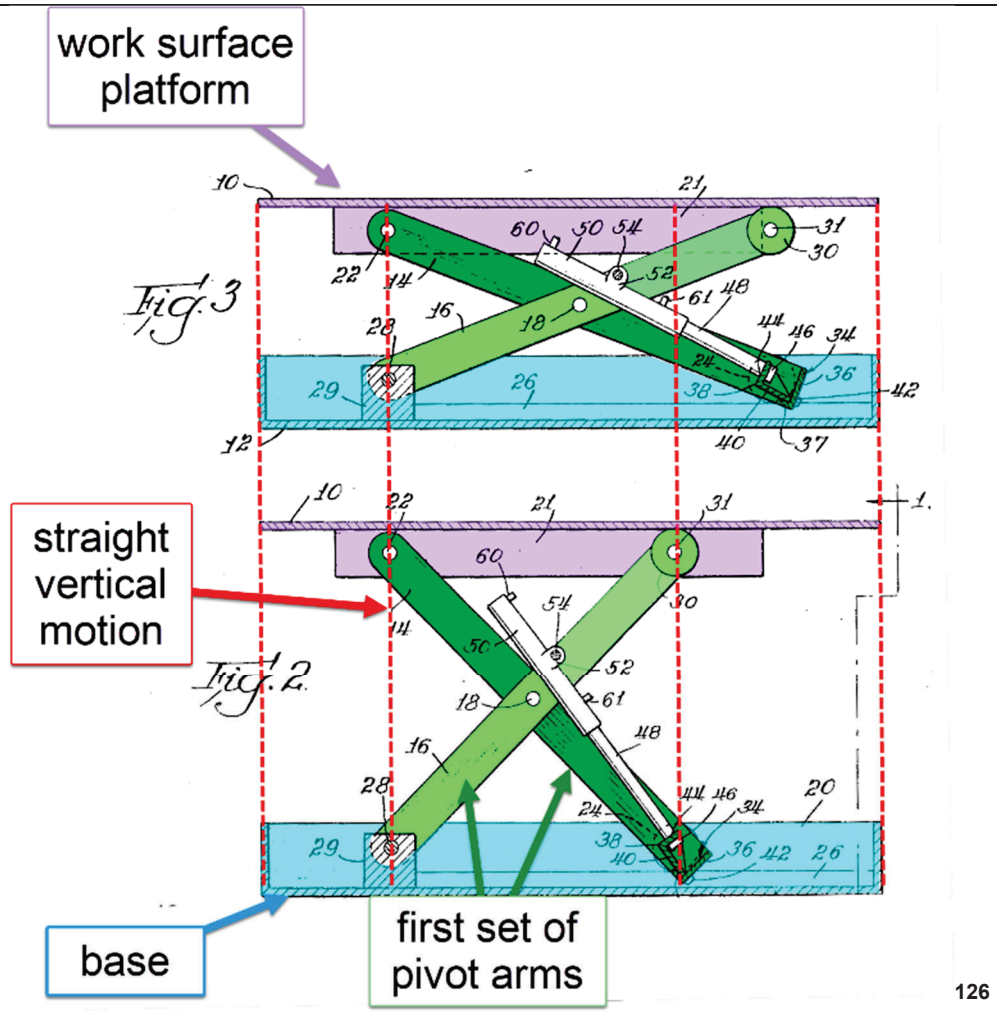

126

"Depending from the top, at each side, is a plate 21. A pivot 22 near one end of the plate 21 connects the upper end of the leg 14 to the plate. Leg 14 has a roller 24 rotatably mounted at the other end on shaft 25. Roller 24 rides on the upper surface of a strip 26 in the bottom of one side of the base 12. One end of the other leg 16 has a pivot 28 connecting it to a support block 29 directly below the pivot 22 for the leg 14. A

[126] Clarke, Figures 2 & 3, Annotated

*roller 30 mounted on shaft 31 at the other end of leg 16 rides on the underside of the table top 10. The legs are closely folded together by the pivot 18 intermediate their ends, **for parallel scissor action between the base and the top**." Clarke 2:3-14 (emphasis added)*

As shown above, the scissor mechanism of Clarke moves the work surface platform in a straight vertical line relative to the base. This is a property typical of scissor lifting mechanisms generally as a POSITA would understand. the mechanism is adjustable to various heights has already been shown. This feature is afforded by the locking gas spring in Lindahl.

9P. The desktop workspace of claim 1,	**YES:** As shown above, Clarke in view of Lindahl, and in further view of HJ Zottel discloses the desktop workspace of claim 1.
9a. wherein the slidable tray protrudes out, down, and parallel to the work surface platform in the extended position.	**YES:** This combination shows that the slidable tray protrudes out, down, and parallel to the work surface platform in the extended position.

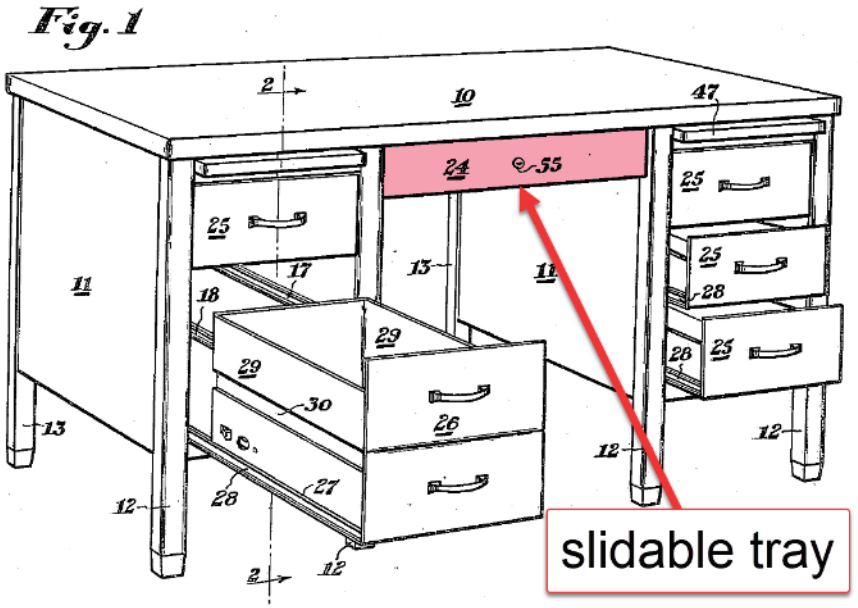

[127]

"The primary objects of the instant invention are to provide a desk having a plurality of box drawers and one or more vertical letter file drawers…" HJ Zottel 1:4-6

[127] HJ Zottel Figure 1, annotated

"The desk comprises a top 10 supported by drawer supporting pedestals 11 having front legs 12 and rear legs 13 attached thereto" HJ Zottel 1:47-50 *"As best shown in Figure 1, the desk is provided with a center drawer 24 between the pedestals 11" HJ Zottel 2:9-11* HJ Zottel shows a slidable tray (drawer 24) which is one of an array of drawers that are integrated with the desk disclosed by HJ Zottel. The drawers of Figure 1 are shown in various state of being opened. Some of them are shown in a closed position, such as central drawer 24 and some of drawers 25. Others are shown in a partially open state such as two of the drawers 25 shown above. Still others such as drawer 26 is shown in a fully open state. Cumulatively, it is clear that the drawers are arranged in a parallel manner to the work surface platform (as demonstrated by the various states shown of open vs. closed drawers). At the same time all of the drawers are arranged strictly below the work surface platform. When any given drawer is pulled out, it will translate to a position that is protrusionally outward away from the work surface platform, as drawer 26 is shown in Figure 1. Thus, when central drawer 24 is in the extended or open position, it will protrude out, down, and parallel to the work surface platform.	
10P. The desktop workspace of claim 1,	**YES:** As shown above, Clarke in view of Lindahl, and in further view of HJ Zottel discloses the desktop workspace of claim 1.
10a. wherein the gas spring is attached directly to the one of the set of pivot arms.	**YES:** Clarke and Lindahl both disclose that the gas spring is attached directly to one of the set of pivot arms.

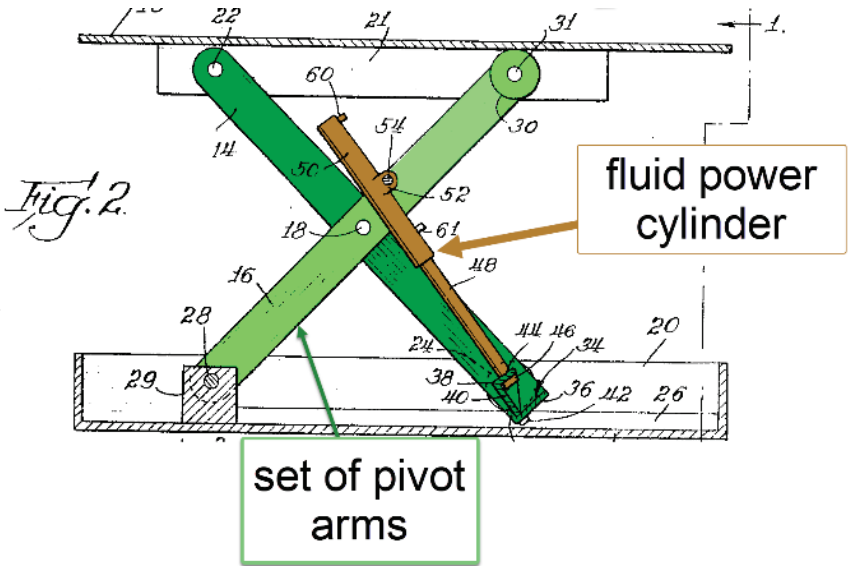

128

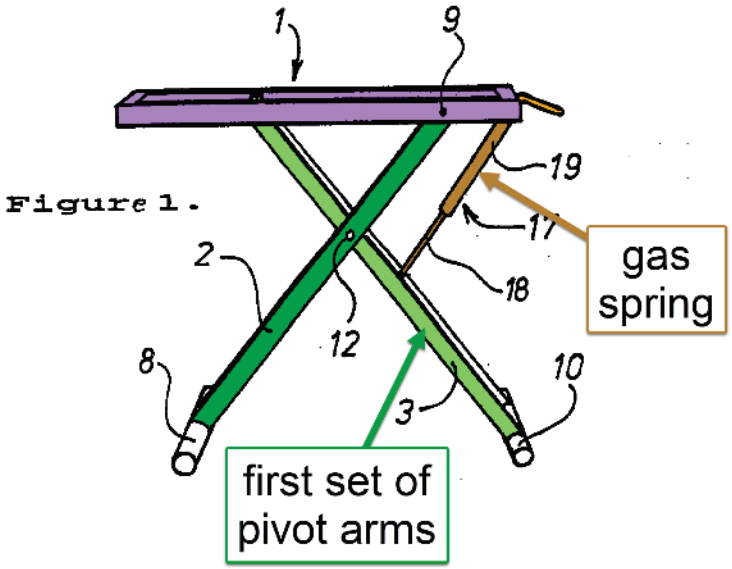

129

"Cylinder 50 has a side mounting plate 52 pivotally mounted on a rod 54. Rod 54 extends between the two opposite legs 16 to which it is connected." Clarke 2:33-36

"The gas-spring includes a bottom part 18 which is pivotally connected to the leg member 3 beneath the pivot rod 12" Lindahl 4:10-12

As shown above, the gas spring is attached directly to one of the first set of pivot arms. In Clarke the gas spring has a bottom part 50 (the cylinder end) which is pivotally connected to leg member 16, which is one of the first set of pivot arms. In Lindahl the gas spring has a bottom part 18 (the rod end) which is pivotally connected to leg member 3, which is one of the first set of pivot arms.

12P. The desktop workspace of claim 1,	**YES:** As shown above, Clarke in view of Lindahl, and in further view of HJ Zottel discloses the desktop workspace of claim 1.
12a. further comprising a height adjustment locking mechanism that holds the work surface platform at various vertical heights above the base.	**YES:** Clarke and Lindal disclose a height adjustment locking mechanism that holds the work surface platform at various vertical heights above the base.

[128] Clarke, Figure 2, Annotated
[129] Lindahl, Figure 1, Annotated

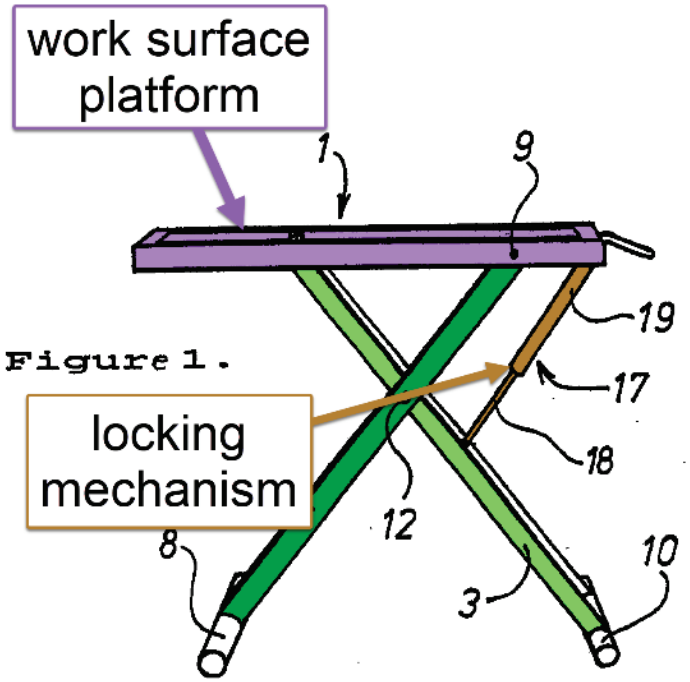

[130]

"The present invention relates to a table stand for use preferably in caravans and motorhomes, wherein the top of the stand is provided with a frame-like part on which a tabletop is intended to be placed and which is <u>adjustable in the height direction so that the tabletop can be adjusted vertically to different positions.</u>" Lindhal, Abstract (emphasis added)

"An essential feature of the invention is that a blockable gas-spring 17, or piston-cylinder device is provided for enabling the position of the frame-like part 1 to be adjusted vertically in a smooth continuous fashion, both in an upward and in a downward direction." Lindahl 4:5-9

As shown above Lindahl discloses the use of a locking gas spring to hold the work surface platform at various vertical heights above the base.

14P. The desktop workspace of claim 1,	**YES:** As shown above, Clarke in view of Lindahl, and in further view of HJ Zottel discloses the desktop workspace of claim 1.

[130] Lindahl Figure 1, annotated

14a. further comprising two sliders that connect the slidable tray to the work surface platform,	**YES:** Clarke in view of Lindahl and in further view of HJ Zottel discloses two sliders that connect the slidable try to the work surface platform.

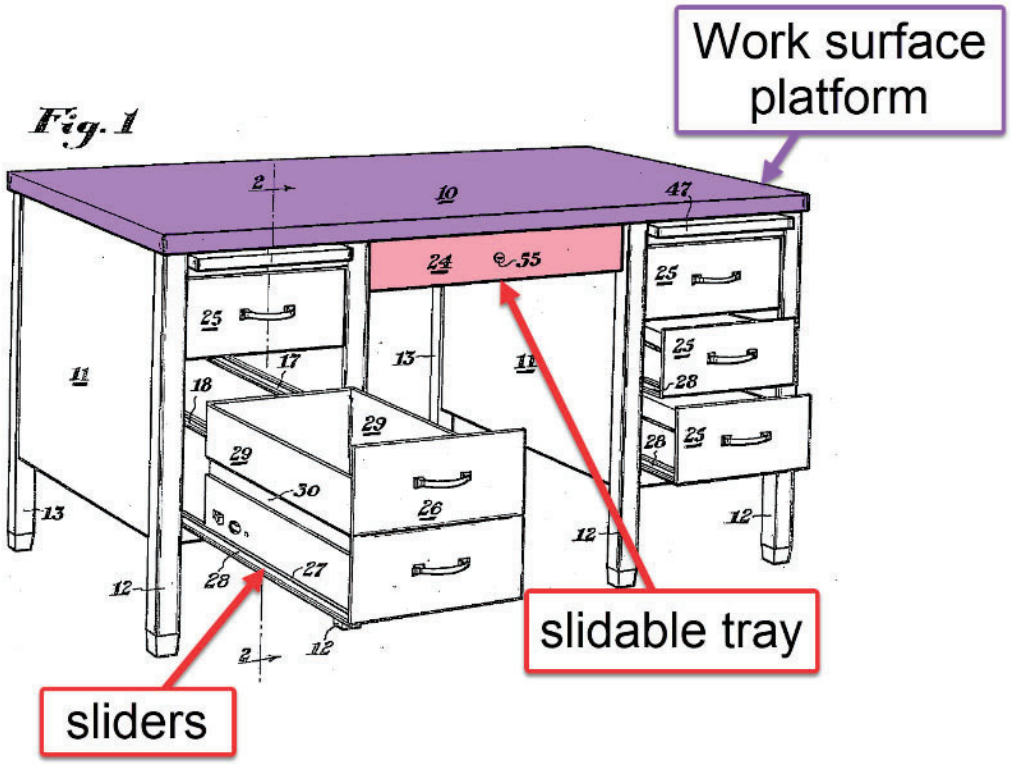

[131]

"As best shown in Figure 1, the desk is provided with a center drawer 24 between the pedestals 11" HJ Zottel 2:9-11

"The runners 28 of each drawer slidably engage a pair of drawer guides 16, 17 or 18 to thus slidably mount each drawer within a pedestal 11." HJ Zottel 2:17-20

As shown above, HJ Zottel discloses the use of two sliders that connect each drawer to the rest of the desk (i.e. runners 28). Specifically, HJ Zottel describes that each drawer slidably enages with a *pair* of guides as shown in the citation above. This is conistent with having a pair of

[131] HJ Zottel, Figure 1, annotated

sliders. Further, it is customary and typical to have a pair of sliders for a drawer (particularly if it is a side mount or top mount) as this provides for a more balanced drawer arrangment. As discussed previously, a POSITA will understand the ordinary permutations of drawer mounts, i.e. bottom mount, side, mount, and top mount. As discussed previously, when combining the teachings of HJ Zottel with the combination of Clarke in view of Lindahl, a POSITA would be motivated to use a top-mount drawer as that is the only structure available to mount a drawer to in this combination. Thus, a POSITA would be motivated to use sliders to connect the slidable tray to the work surface platform.

In addition to this, a POSITA may also consider other well-known teachings in the prior art such as that of Drabczyk which shows the use of two sliders that connect the slidable tray to the work surface platform as shown below:

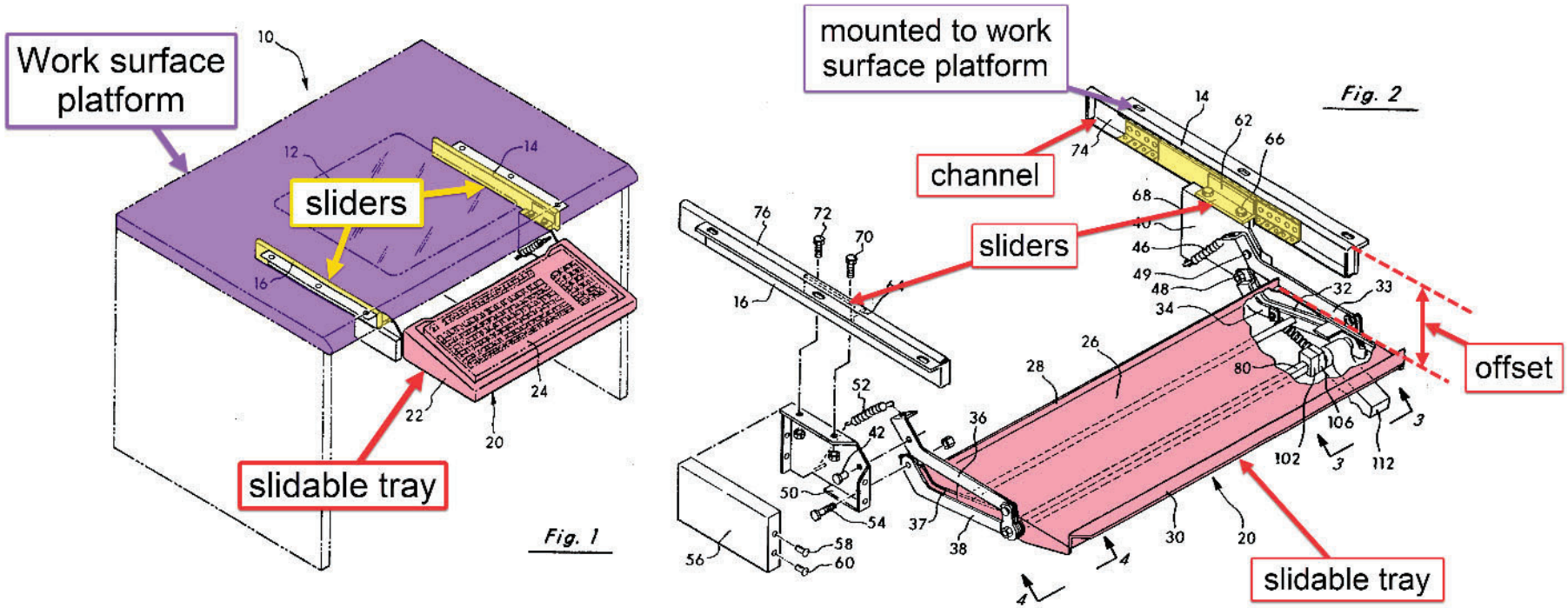

132

[132] Drabczyk Figures 1 and 2, combined and annotated

"Keyboard holder 20 is secured to workstation 10 to slide from an out of the way position beneath the top of workstation 10 to a working position as shown in FIG. 1. Keyboard holder 20, shown in FIG. 1, includes a molded plastic tray 22, which holds most types and sizes of keyboards 24." Drabczyk 3:36-41 *"Mounting plates 40, 42 are affixed to slide brackets 62, 64, respectively by bolts 66-72. Slide brackets 62, 64 slide within extendible tracks 74, 76 on mounting brackets 14, 16.* ***<u>The design and operation of slide brackets 62, 64 and mounting brackets 14, 16 are conventional in design and are not discussed in any further detail.</u>*** *Thus, support tray 26, along with keyboard tray 22 and keybaord 24 are movable from an out of the way position beneath the upper surface of workstation 10 to a working position shown in FIG. 1." Drabczyk 3:65-4:6 (emphasis added)* As shown above Drabcyzk discloses the use of two sliders (slide brackets 62, 64) which connect the slidable tray (keyboard holder 20 and molded plastic tray 22) to the work surface platform, i.e. the desk top. With or without the dislosure of Drabczyk, a POSITA would be motivated to include a top-mounted drawer in the typical and traditional style (i.e. with a pair of sliders) when combining the teachings of HJ Zottel with Clarke in view of Lindahl.	
14b. wherein the two sliders operate in parallel to facilitate selectively positioning the slidable tray between the stored position under the work surface platform and the extended position that is outward and lowered with respect to the work surface platform.	**YES:** Clarke in view of Lindahl and in further view of HJ Zottel discloses that the two sliders operate in parallel to facilitate selectively positioning the slidable tray between the stored position under the work surface platform and the extended position that is outward and lowered with respect to the work surface platform.

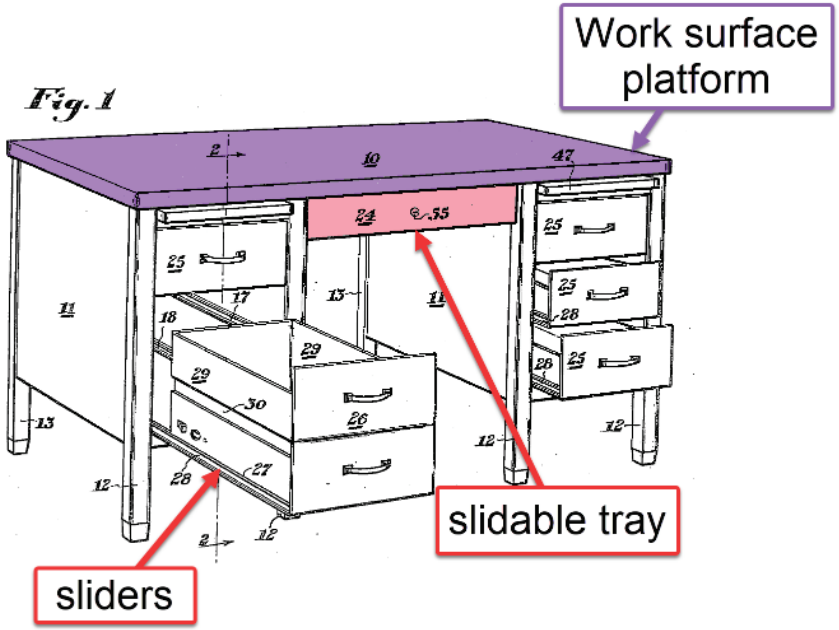

[133]

"As best shown in Figure 1, the desk is provided with a center drawer 24 between the pedestals 11" HJ Zottel 2:9-11

"The runners 28 of each drawer slidably engage a pair of drawer guides 16, 17 or 18 to thus slidably mount each drawer within a pedestal 11." HJ Zottel 2:17-20

As discussed previously, HJ Zottel discloses two sliders. Further, as is typical and customary, the two sliders operate in parallel. In fact, when the drawers of HJ Zottel are extended or retracted, each of the two sliders operate together. For example, each drawer of HJ Zottel can be placed in a stowed position (as drawer 24 is shown above) or in a opened position (such as drawer 26 shown above). Further as is typical of drawers in general, when extended the drawer is positioned outward and lowered with respect to the work surface platform.

Further still, a POSITA can look to prior art such as Drabczyk which also discloses the use of two sliders (as previously discussed) but also demonstrates that the sliders operate in parallel which facilitate positioning the tray in a stored position under the work surface or an extended position where it is spaced outward and lowered with respect to the work surface platform as shown below:

[133] HJ Zottel Figure 1, annotated

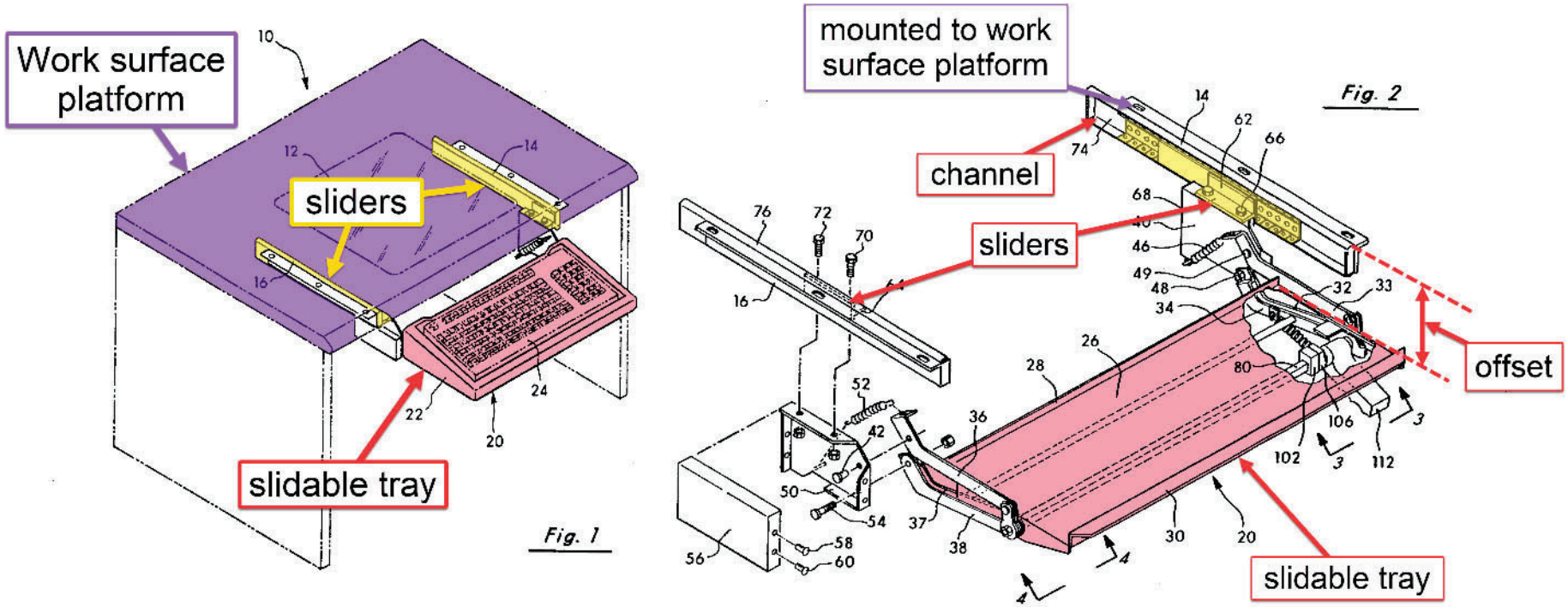

134

"Keyboard holder 20 is secured to workstation 10 to slide from an out of the way position beneath the top of workstation 10 to a working position as shown in FIG. 1. Keyboard holder 20, shown in FIG. 1, includes a molded plastic tray 22, which holds most types and sizes of keyboards 24." Drabczyk 3:36-41

"Mounting plates 40, 42 are affixed to slide brackets 62, 64, respectively by bolts 66-72. Slide brackets 62, 64 slide within extendible tracks 74, 76 on mounting brackets 14, 16. ***The design and operation of slide brackets 62, 64 and mounting brackets 14, 16 are conventional in design and are not discussed in any further detail.*** *Thus, support tray 26, along with keyboard tray 22 and keybaord 24 are movable from an out of the way position beneath the upper surface of workstation 10 to a working position shown in FIG. 1." Drabczyk 3:65-4:6 (emphasis added)*

134 Drabczyk Figures 1 and 2, combined and annotated

As shown above, Drabczyk discloses the use of two sliders (slide brackets 62, 64) that operate in parallel that allow the keyboard to slide between an extended position as shown in Figure 1 above and a stowed position in accordance with traditional design.[135] In addition to this, as shown in Figure 1 of Drabczyk that shows that when in the extended position, the slidable tray is positioned outward and lowered with respect to the work surface platform.	
15P. The desktop workspace of claim 1,	**YES:** As shown above, Clarke in view of Lindahl, and in further view of HJ Zottel discloses the desktop workspace of claim 1.
15a. wherein the one end of the gas spring is fixed relative to an underside of the work surface platform such that the one end of the gas spring acts on the underside of the work surface platform.	**YES:** Clarke in view of Lindahl discloses that one end of the gas spring is fixed relative to an underside of the work surface platform such that the one end of the gas spring acts on the underside of the work surface platform

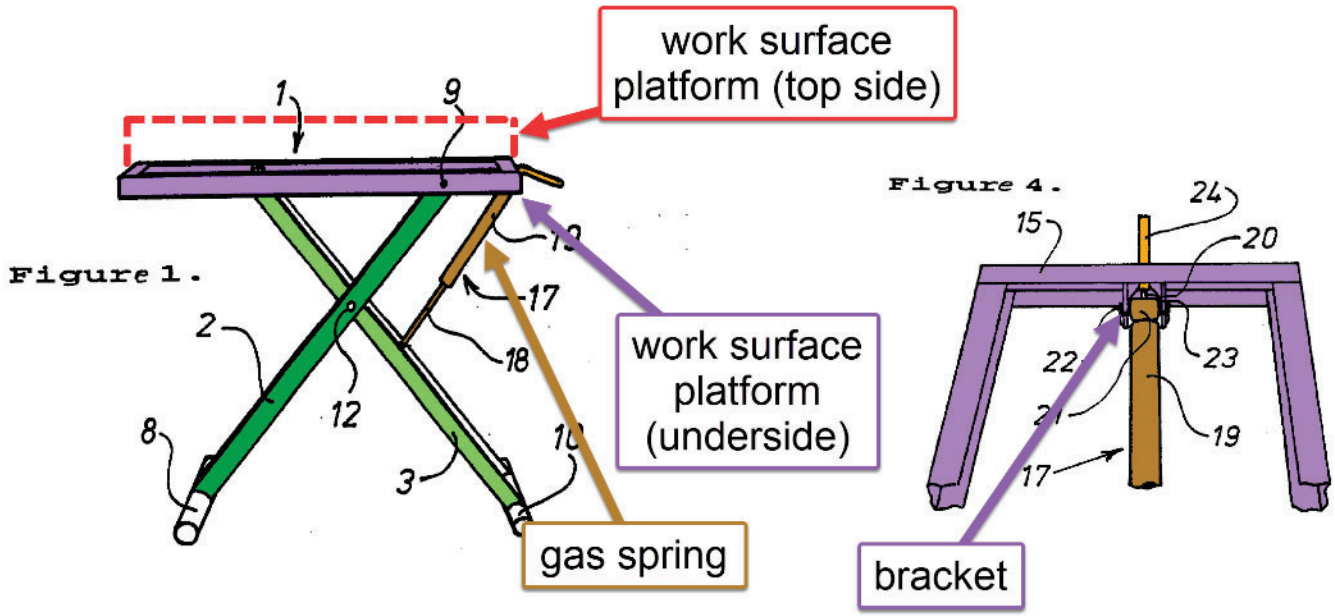

"The present invention relates to a table stand for use preferably in caravans and motorhomes, wherein the top of the stand is provided with a frame-like ***part on which a tabletop is intended to be placed*** *and which is adjustable in the height direction so that the tabletop can be adjusted vertically to different positions." Lindhal, Abstract (emphasis added)*

[135] Drabczyk 3:65-4:6

"An essential feature of the invention is that a blockable gas-spring 17, or piston-cylinder device is provided for enabling the position of the frame-like part 1 to be adjusted vertically in a smooth continuous fashion, both in an upward and in a downward direction. The gas-spring includes a bottom part 18 which is pivotally connected to the leg member 3 beneath the pivot rod 12, and an upper part 19 which is pivotally connected to the transverse frame-bar 15 on the same side of a vertical plane passing through the rod 12 as the lower part 18 (see also Figures 3, 4)." Lindahl 4:5-15 *"The pin 20 is intended to coact with a cylindrical bushing 21 which is pivotally connected to a holder means 23, by means of screws 22 or the like, said holder means being mounted on the inside of the frame bar 15." Lindahl 4:23-27* As shown above Lindahl discloses a work surface platform that comprises a top side (tabletop intended to be placed on the frame) as well as an underside (the frame portion highlighted in purple above). Further, Lindahl teaches a gas spring is fixed relative to the underside of the work surface platform. This is accomplished through the use of a bracket as shown in Figure 4 of Lindahl. Because the gas spring is fixed to the underside of the work surface platform, it acts on the same.	
16P. The desktop workspace of claim 15,	**YES:** As shown above, Clarke in view of Lindahl, and in further view of HJ Zottel discloses the desktop workspace of claim 15.
16a. wherein the one end of the gas spring is fixed to the work surface platform via a bracket mounted to the underside of the work surface platform.	**YES:** Clarke in view of Lindahl discloses that one end of the gas spring is fixed to the work surface platform via a bracket fixed to an underside of the work surface platform.

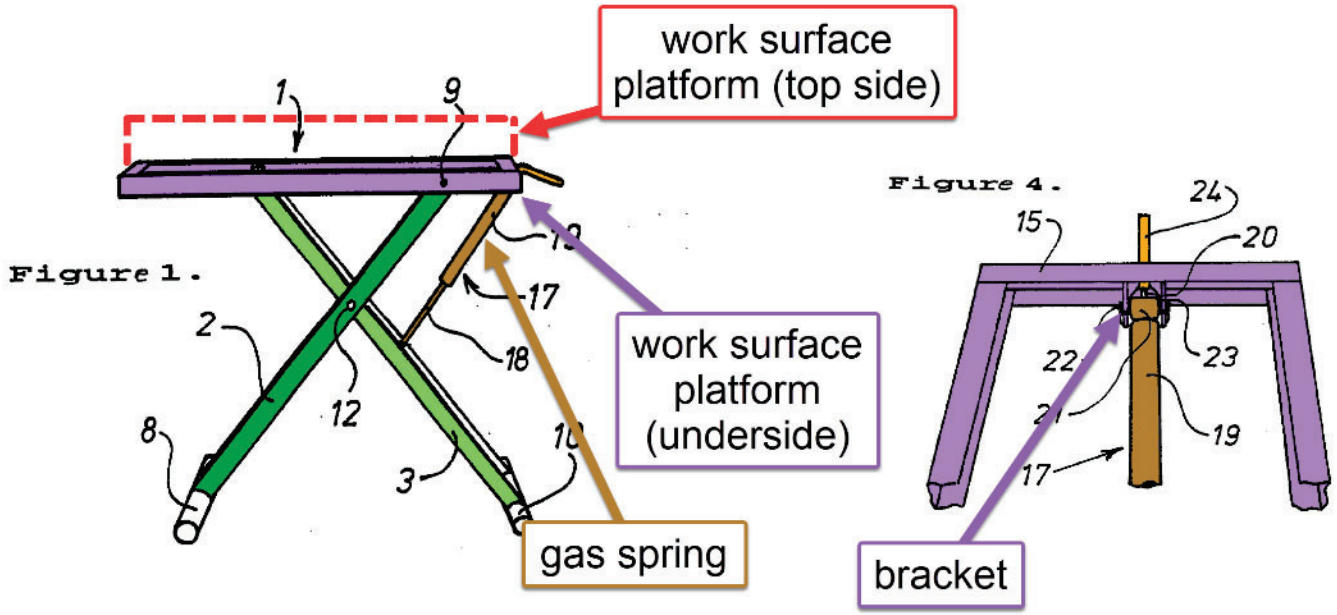

"The present invention relates to a table stand for use preferably in caravans and motorhomes, wherein the top of the stand is provided with a frame-like ***part on which a tabletop is intended to be placed*** *and which is adjustable in the height direction so that the tabletop can be adjusted vertically to different positions." Lindhal, Abstract (emphasis added)*

"An essential feature of the invention is that a blockable gas-spring 17, or piston-cylinder device is provided for enabling the position of the frame-like part 1 to be adjusted vertically in a smooth continuous fashion, both in an upward and in a downward direction. The gas-spring includes a bottom part 18 which is pivotally connected to the leg member 3 beneath the pivot rod 12, and an upper part 19 which is pivotally connected to the transverse frame-bar 15 on the same side of a vertical plane passing through the rod 12 as the lower part 18 (see also Figures 3, 4)." Lindahl 4:5-15

"The pin 20 is intended to coact with a cylindrical bushing 21 which is pivotally connected to a holder means 23, by means of screws 22 or the like, said holder means being mounted on the inside of the frame bar 15." Lindahl 4:23-27

As shown above Lindahl discloses a work surface platform that comprises a top side (tabletop intended to be placed on the frame) as well as an underside (the frame portion highlighted in purple above). Further, Lindahl discloses a gas spring fixed to the work surface platform via a

bracket which is fixed to the underside portion. This is clearly shown in Figure 4 of Lindahl which shows a bracket with ears to which the locking gas spring is coupled. As discussed previously, a POSITA would have been motivated to connect the locking gas spring of Lindahl with the Clarke mechanism in such a way that the handle would be on the table itself. As discussed previously, this will provide for greater ease of use for the adjustment mechanism. Thus Clarke in view of Lindahl includes this.	
18P. A desktop workspace that adjusts vertically, comprising:	**YES:** See element 1P.
18a. a work surface platform;	**YES:** See element 1a.
18b. a slidable tray selectively positionable between a stored position under the work surface platform and an extended position that is outward and lowered with respect to the work surface platform,	**YES:** See element 1b.
18c. a base configured to sit on an existing platform; and	**YES:** See element 1c.
18d. a height adjustment mechanism connecting the work surface platform and the base, the height adjustment mechanism including:	**YES:** See element 1d.
18d1. a set of pivot arms that connect at a scissoring pivot point creating a scissoring motion when raising and lowering the work surface platform to various heights;	**YES:** See element 1d1.
18d2. a base pivot point fixed relative to the base and connecting the base and the set of pivot arms;	**YES:** See element 1d2.
18d3. a platform pivot point fixed relative to the work surface platform and connecting the work surface platform and the set of pivot arms;	**YES:** See element 1d3.
18d4. a sliding mechanism on an end of an arm of the set of pivot arms between the end of the arm and either the work surface platform or the base; and	**YES:** See element 1d4.
18d5. a gas spring that assists in elevation of the work surface platform by applying a force to rotate one of the set of pivot arms as part of the scissoring motion,	**YES:** See element 1d5.
18d6. wherein the gas spring, the set of pivot arms, the base pivot point, and the platform pivot point align side-by-side when the	**YES:** Clarke in view of Lindahl discloses that the gas spring, the first set of pivot arms, the base pivot point, and the platform pivot point align

desktop workspace is in a fully lowered position such that the desktop workspace adjusts vertically.	side-by-side when the desktop workspace is in a fully lowered position such that the desktop workspace adjusts vertically.

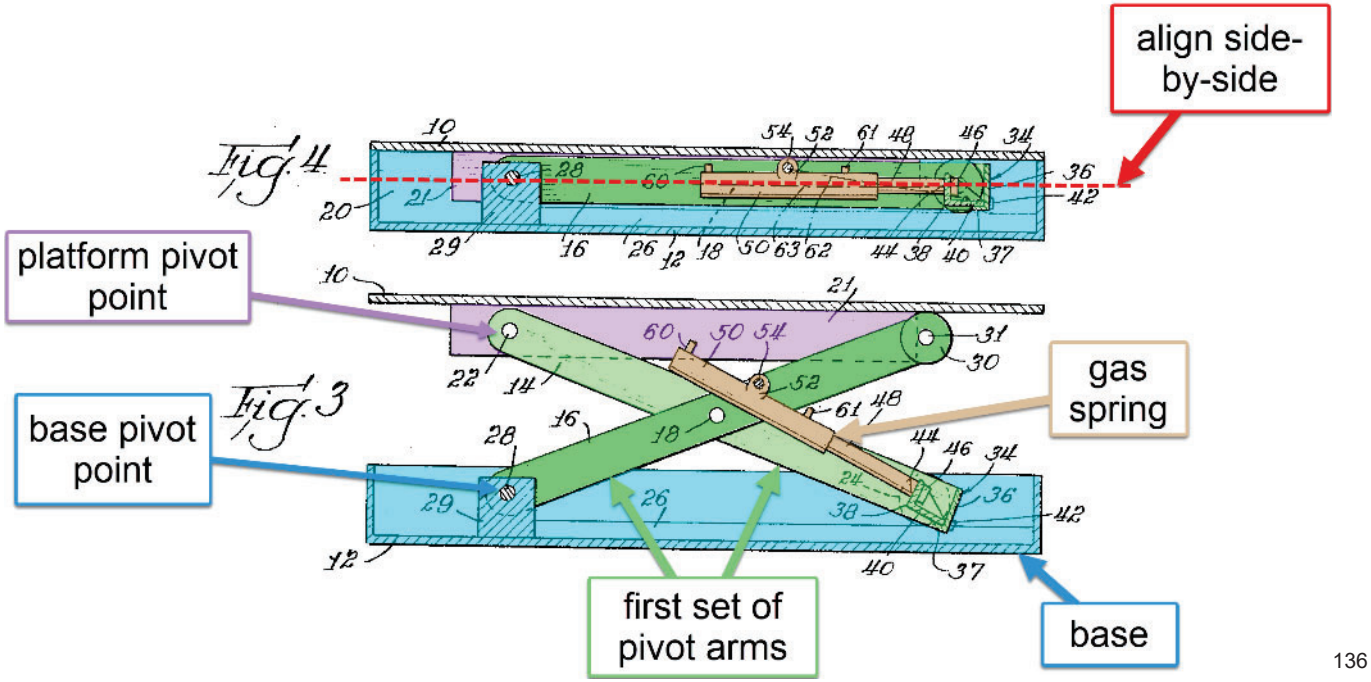

[136]

"Cylinder 50 has a side mounting plate 52 pivotally mounted on a rod 54. Rod 54 extends between the two opposite legs 16 to which it is connected. It is located at the side of the cylinder 50 opposite the pivotal mountings formed by studs 42. This rod 54 is at the upper side of the legs 16 above the common pivot 18 for the legs (FIGURE 4), and the mountings 52 extend downwardly. In the down position the cylinders will be entirely below the upper edges of the legs 16 to which they are connected." Clarke 2:32-41

As shown above, the Clarke linkage is arranged such that the gas spring, the first set of pivot arms, the base pivot point, and the platform pivot point align side-by-side when the workspace is in a fully lowered position. As discussed previously, a POSITA would be motivated to replace the fluid power cylinder of Clarke with the locking gas spring system of Lindahl. Further still, a POSITA will understand that Clarke teaches a kinematic arrangement where the piston-cylinder actuator is in flat alignment while still having some mechanical advantage with which to

[136] Clarke, Figure 3 & 4, Annotated

operate on the scissor linkage. This is afforded by the eccentric trunnion mount of the piston-cylinder arrangement of Clarke. A POSITA will recognize the advantage this will provide in the combination of Clarke in view of Lindahl. It will allow the locking gas spring to still provide some assistance in the lifting of the table from the fully lowered position. Finally, as discussed previously, a POSITA will recognize that the actuated end of the locking gas spring is most advantageously connected to the work surface platform, as previously discussed. Thus, for at least these reasons, a POSITA will be motivated to connect the gas spring to the work surface platform as taught in Lindahl, while simultaneously connecting the other end of the locking gas spring to the pivot arms in a manner such as taught by Clarke.

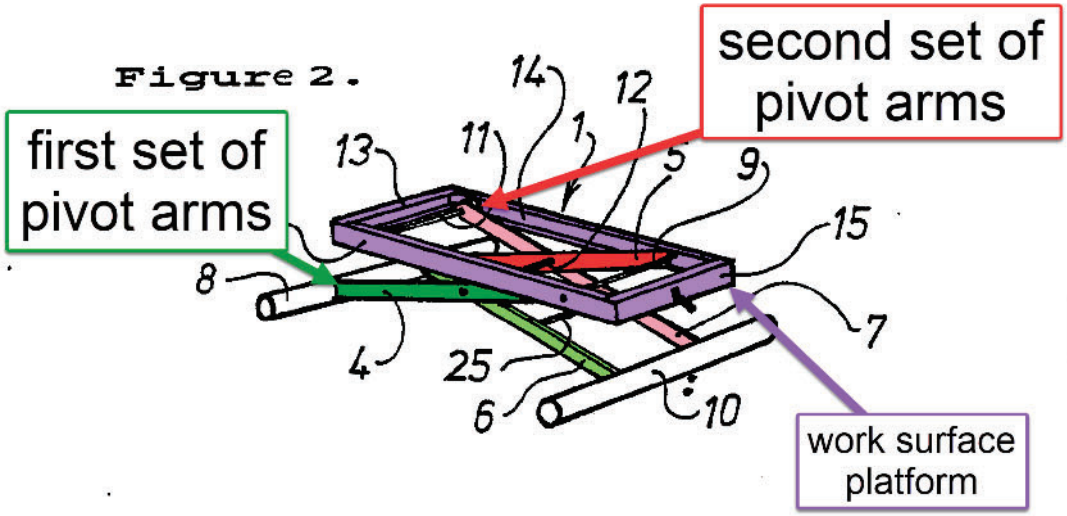

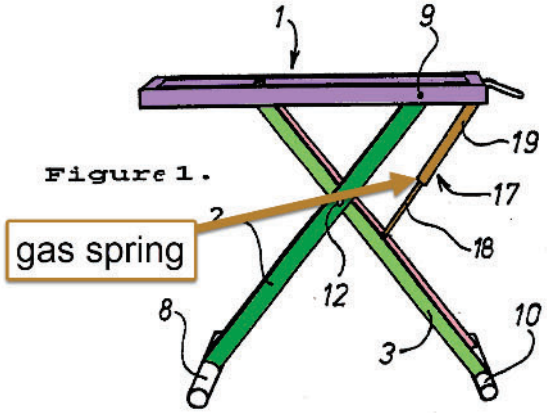

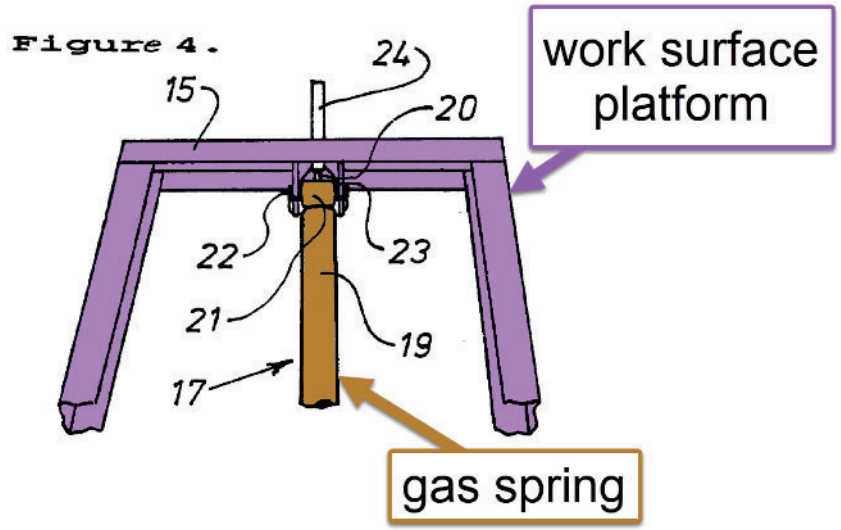

"An essential feature of the invention is that a blockable gas-spring 17, or piston-cylinder device is provided for enabling the position of the frame-like part 1 to be adjusted vertically in a smooth continuous fashion, both in an upward and in a downward direction. The gas-spring includes a bottom part 18 which is pivotally connected to the leg member 3 beneath the pivot rod 12, and an upper part 19 which is pivotally connected to the transverse frame-bar 15 on the same side of a vertical plane passing through the rod 12 as the lower part 18 (see also Figures 3, 4)." Lindahl 4:5-15

As shown above, Clarke in view of Lindahl and in further view of HJ Zottel with the knowledge of a POSITA renders obvious each and every element of the Asserted Claims of the '926 patent. In addition to this, certain things that would be well within the ordinary knowledge and familiarity of a POSITA are also explicitly demonstrated in Drabczyk or Zhang. For at least the reasons shown above, it is my opinion that the Asserted Claims of the '926 patent are invalid due to obviousness under 35 U.S.C §103.