77. As will be demonstrated in the charts below, at least claims 1-10, 12, 14-16, and 18 of the ’926 patent are rendered obvious by Yamamoto in view of Zhang and in further view of HJ Zottel. I have not been asked to review additional claims as to their validity in light of this combination. However, should I be asked to do so, I will perform a validity analysis on all the claims of the ’926 patent. For reference these three pieces of prior art are shown below:

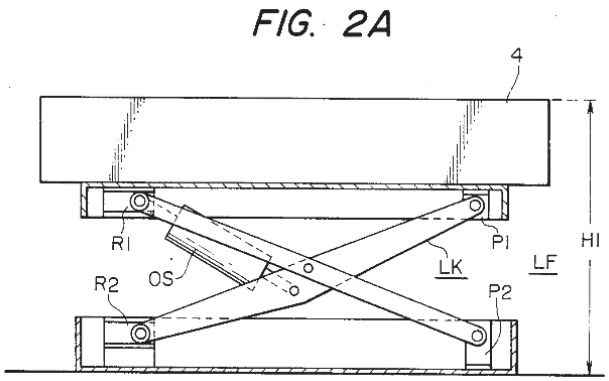	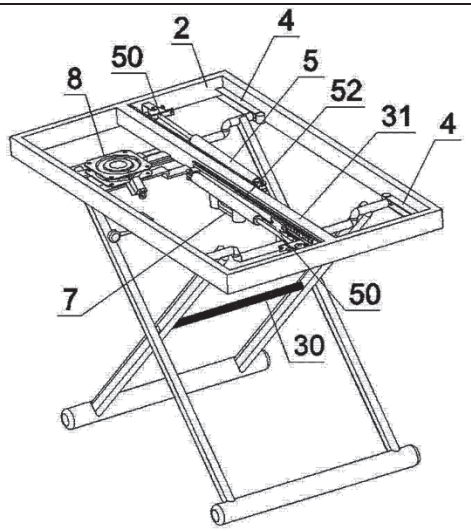 图 4	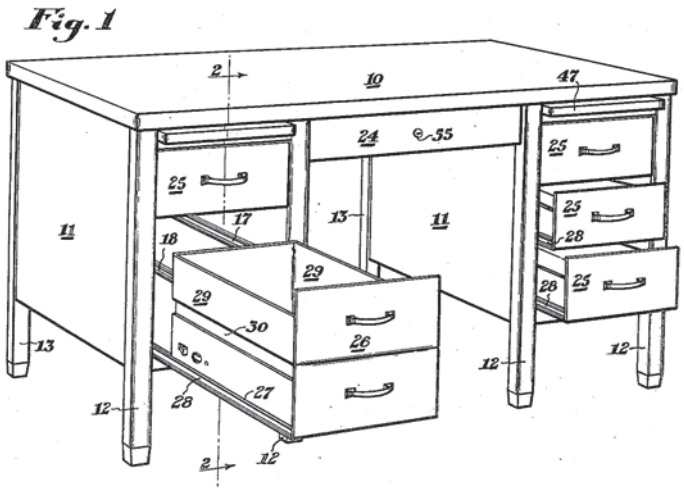
US 4,574,785 to Yamamoto March 11, 1986	CN20393825 to Zhang May 26, 2014	US 2,225,243 to HJ Zottel June 3, 1938

78. I note that despite each of these references being publicly available, only one of them (Zhang) was disclosed to the examiner during the prosecution of the ’926 patent but never cited. A POSITA would be motivated to combine these references in accordance with the teachings therein. For example, Yamamoto and Zhang are both vertically adjustable platforms that use a scissor linkage and cylindrical actuator. They are highly compatible with each other, but Yamamoto shows greater vertical adjustability afforded by the ability to lower to a point where the pivots points are aligned. Combining Yamamoto with Zhang would allow for greater height adjustability as well as allowing the Zhang table to store more compactly.[200] When combined, the gas springs of Zhang will also be aligned with the links as in Yamamoto leading to maximum compactness for storage.

[200] Yamamoto 1:53-60

79. A POSITA would further be motivated to combine the base of Yamamoto with the Zhang mechanism to gain ordinary and well-known advantages. For example, were Zhang to be used on a delicate surface, its legs would cause concentrated pressure points which would cause unrecoverable depression marks in carpet over time. A POSITA will recognize this fact and be motivated to incorporate the base as taught by Yamamoto which presents a broad base surface. This base surface more evenly distributes the pressure which significantly reduces the potential damage to the supporting floor. This principle is well-known. For example, US patent no. 5,823,492 to Anselmo (circa 1998) states the following:

> *"When furniture rests on a laid carpet for a period of time, it crushes the pile, the backing and the pad, forming indentations thereon. When the pile gets crushed, it generally can be brushed out to nearly its original form. However, when the backing gets bent, it will not return to its original form. Also, once a pad gets crushed over a period of time, i.e., generally a month or more, it will not come back to its original form. The bent backing and crushed pad will be visible through the carpet pile as indentations or marks marring the pile. Therefore, once furniture is placed on a laid carpet, the furniture cannot be rearranged without leaving indentation and ugly marks visible on the carpet. The only recourse is to either position other furniture over the residual indentation marks or replace the original carpet and pad. Prior art furniture caps attempt to protect carpet pile by distributing the loading caused by a particular piece of furniture over a larger area. However, prior art furniture caps merely make larger residual marks in the backing and pad."*[201]

80. As shown above, the use of a broad supportive base to reduce the formation of unrecoverable indentation in surfaces such as carpets is well known. A POSITA would recognize that the legs of Zhang would present the same wear and tear problem as any other piece of furniture on carpet. As such, a POSITA would be motivated to incorporate a base, such as disclosed by Yamamoto to help distribute these loads and prevent the table from damaging surface it is placed on.

81. A POSITA would be further motivated to combine the teachings of Yamamoto in view of Zhang such that the actuator is connected directly to the scissor pivot arms as taught in Yamamoto. This allows the linkage to fully collapse flat as Yamamoto teaches which makes for maximum compactness which is what Yamamoto describes.[202] Further, when combining the teachings of a pair of locking gas springs (as taught by Zhang) with the teachings of Yamamoto, a POSITA will be motivated to connect the opposite side of the gas spring to the platform member. Yamamoto's hydraulic cylinder is connected to the roller end of one of the scissoring pivot arms. However, when swapping the hydraulic cylinder of Yamamoto for the locking gas spring of Zhang, a POSITA will find it more advantageous to attach the rod end of the locking gas spring to the platform. This is because the rod end of a locking gas spring typically has a lever that can selectively be operated to unlock or lock the locking gas spring. A POSITA will understand that this type of connection is an equivalent permutation of the teachings of Yamamoto that will still allow the linkage to fully collapse (in accordance with the teachings of Yamamoto) but will also allow the lock lever of the gas spring to be more easily accessible and actuatable by a user.

---

[201] US 5,823,492 at 1:20-38
[202] Yamamoto 1:53-64

A POSITA would be further motivated to combine HJ Zottel with the combination of Yamamoto in view of Zhang as HJ Zottel discloses a desk top with drawers underneath. This is a well-known design element that any POSITA would understand could be integrated with a scissor lift platform. A POSITA would understand that the depth of the drawers would, at most, be the width of the scissor links so that the drawers do not prevent the assembly from being fully lowered. HJ Zottel is one of many examples of this well-known design element of having drawers integral with the desk.

82. Further, when combining the teachings of HJ Zottel with the combination of Yamamoto in view of Zhang, a POSITA would be motivated to use a top-mount drawer as that is the most convenient mount type for a desk of this sort. A bottom mounted drawer slide will not be suitable as there is no structure below to support the drawer. Further, a side mounted drawer is feasible however, doing so requires installing a top-mounted bracket which provides structure to support the drawer. This is functionally equivalent to a top-mounted drawer. Thus, for at least these reasons, a POSITA will be motivated to combine the teachings of HJ Zottel in the form of a top-mounted drawer in a manner as is well-known.

Challenged Claim '926	
1P. A desktop workspace that adjusts vertically, comprising:	**YES:** While the preamble is generally not considered limiting, Yamamoto in view of Zhang discloses a desktop workspace that adjusts vertically.

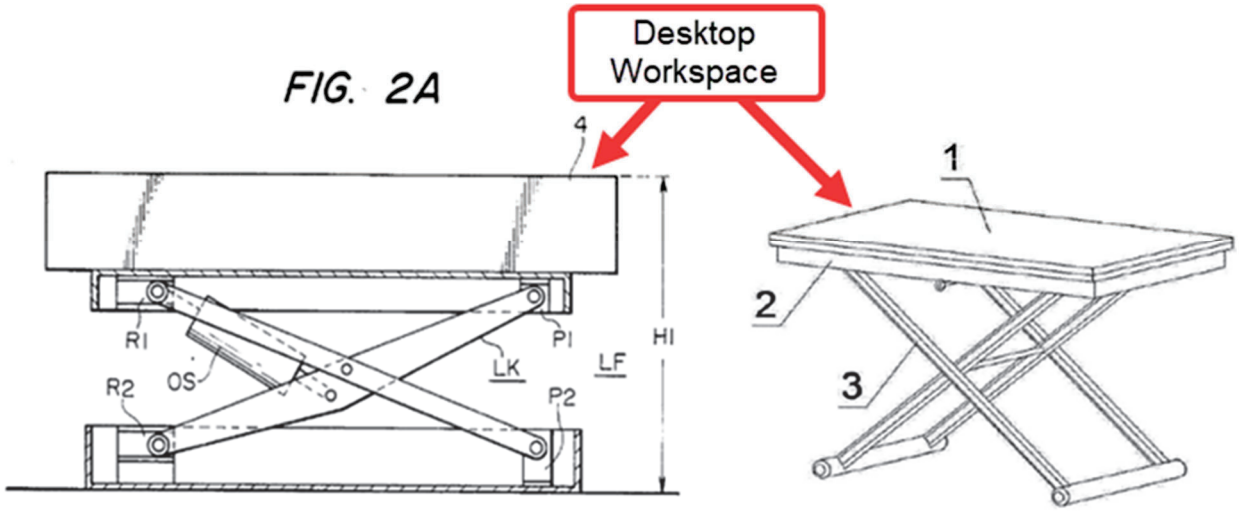

Zhang states "The utility model relates to a height adjustable table, comprising a tabletop 1…"[203] As shown, Zhang clearly describes a desktop workspace that is height adjustable, i.e. adjusts vertically. For example, both Yamamoto and Zhang utilize a scissor lift mechanism. A POSITA will understand that scissor lift mechanisms adjust the vertical height of a platform surface such as a desktop workspace. For example, Yamamoto states: *"The conventional fluidized bed has a fixed height. However, there has been a demand for a fluidized bed having an adjustable height, specifically, one in which the height of the bed above the floor can be made as small as possible for ease in transferring a patient onto the bed or when a patient gets onto or off the bed, and placed at a suitable height when the patient is lying on the bed for administering treatment to the patient." Yamamoto 1:53-60* As shown above, Yamamoto describes a vertically adjustable workspace platform (a patient support platform in this case). A POSITA would readily recognize that the Yamamoto vertical adjustment mechanism could be used for a wide variety of applications, as scissor lift mechanisms are extremely common and well-known. It is helpful to ascertain the plain and ordinary meaning and scope of "desktop workspace" considering the common dictionary definitions as shown below: Desktop: the top of a desk[204] Desk: A table, counter, or booth at which specified services or functions are performed[205] Workspace: An area used or allocated for one's work, as in an office.[206] The usage of the term desktop workspace within the '926 patent is consistent with the plain and ordinary meaning of the words from which this compound term is composed. For example, the desktop workspace in the '926 patent is described as having a top surface at which an operator stands to perform their work.[207] In just the same way, Yamamoto discloses a work surface in the form of a bed on a table at which an operator stands to perform their work. Similarly, Zhang discloses a table surface which is a dedicated space allocated for one's work should they so choose.	
1a. a work surface platform;	**YES:** Both Yamamoto and Zhang disclose a work surface platform.

[203] Zhang, abstract
[204] <https://www.ahdictionary.com/word/search.html?q=desktop> accessed Dec 29, 2024
[205] <https://www.ahdictionary.com/word/search.html?q=desk> accessed Dec 29, 2024
[206] <https://www.ahdictionary.com/word/search.html?q=workspace> accessed Dec 29, 2024
[207] '926 patent 1:33-66

Yamamoto discloses a work surface platform as shown below:

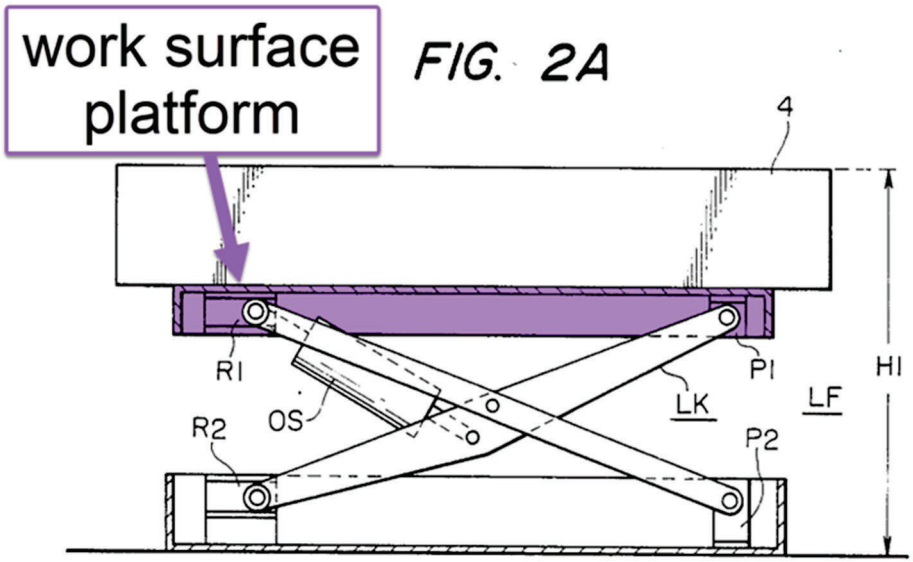

"The conventional fluidized bed has a fixed height. However, there has been a demand for a fluidized bed having an adjustable height, specifically, one in which the height of the bed above the floor can be made as small as possible for ease in transferring a patient onto the bed or when a patient gets onto or off the bed, ***<u>and placed at a suitable height when the patient is lying on the bed for administering treatment to the patient."</u>*** *Yamamoto 1:53-60 (emphasis added)*

As shown above, Yamamoto discloses a platform for supporting a patient. A POSITA will understand that this is a platform where doctors and nurses perform work on patients, which is clearly an example of a work surface platform.

Zhang also describes a work surface platform as shown below.

"The purpose of the present utility model is achieved as follows: a height-adjustable table, comprising a tabletop (1), a stand (2), and an "X" -shaped cross movable metal foot (3)." Zhang [0004]
"Currently, tables on the market that are supported by "X" – shaped cross metal feet usually have a fixed height on the tabletop. As the tabletop height cannot be adjusted, it cannot be adjusted to the appropriate height according to the user's needs, and it is also inconvenient to reduce the space occupied for storage after folding. … The purpose of this utility model is to overcome the problems existing in the prior art and provide a height-adjustable table." Zhang [0002-3]

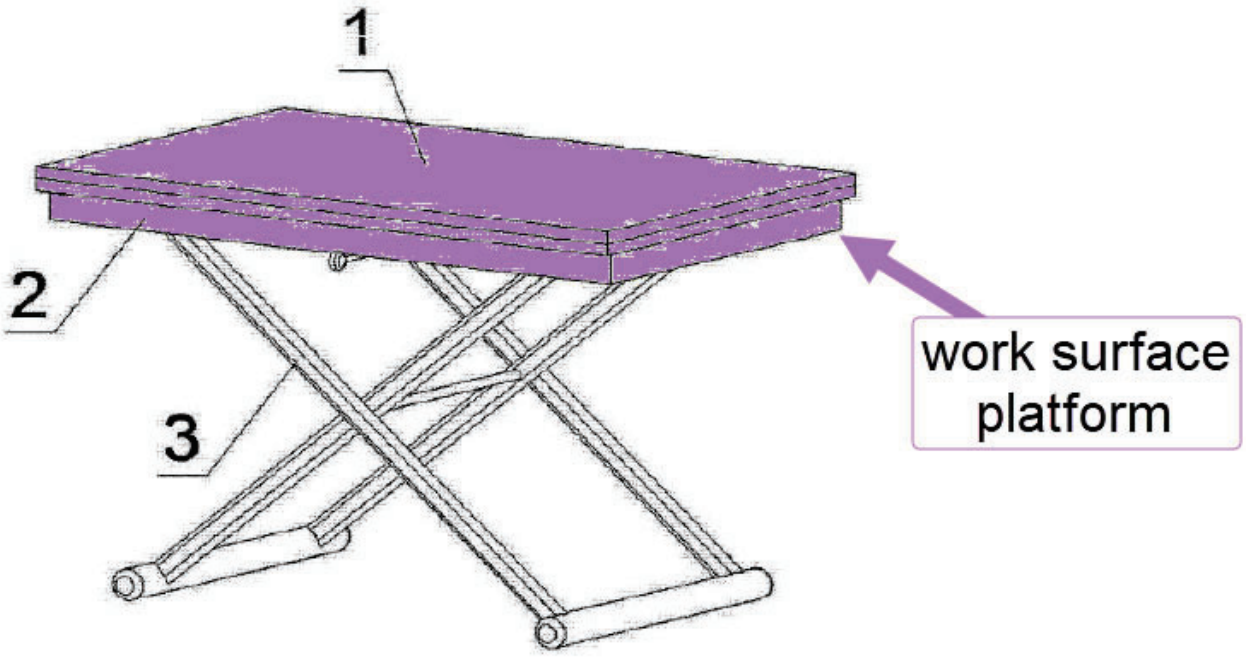

As shown above, Zhang discloses a work surface platform as the combination of the tabletop (1) and the upper frame portion of the stand (2) that supports the tabletop. Zhang describes setting the table at a height that is best suited for a user's needs. This demonstrates that the table is intended for a user to perform some type of activity or work at the work surface platform of Zhang.

1b. a slidable tray selectively positionable between a stored position under the work surface platform and an extended position that is outward and lowered with respect to the work surface platform,	**YES:** Yamamoto in view of Zhang, and in further view of HJ Zottel discloses a slidable tray selectively positionable between a stored position under the work surface platform and an extended position that is outward and lowered with respect to the work surface platform.

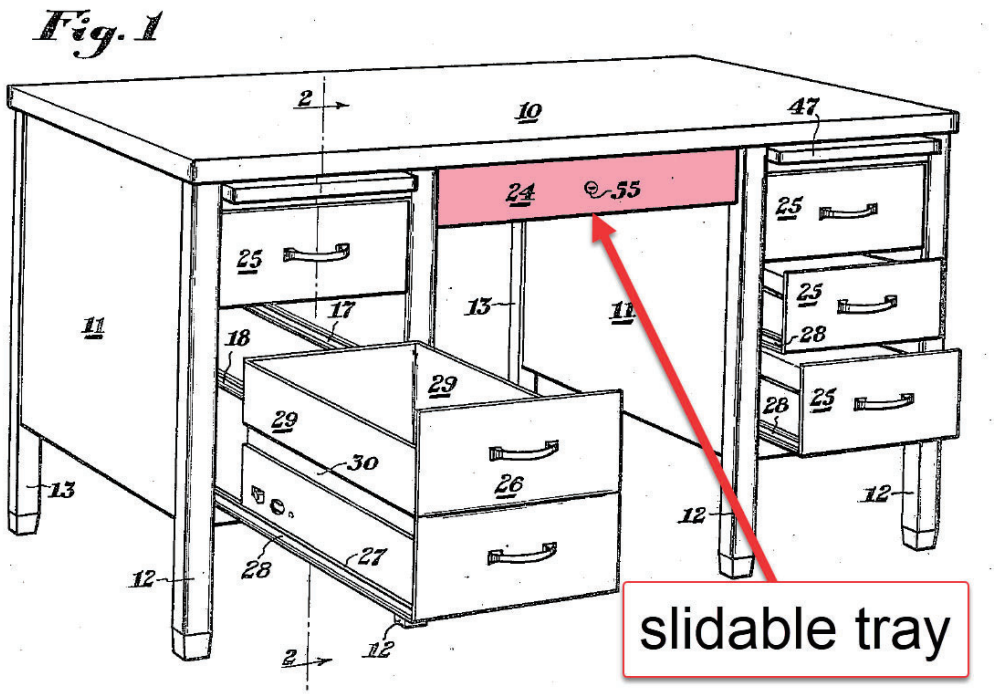

"The primary objects of the instant invention are to provide a desk having a plurality of box drawers and one or more vertical letter file drawers…" HJ Zottel 1:4-6

"The desk comprises a top 10 supported by drawer supporting pedestals 11 having front legs 12 and rear legs 13 attached thereto" HJ Zottel 1:47-50

"As best shown in Figure 1, the desk is provided with a center drawer 24 between the pedestals 11" HJ Zottel 2:9-11

As shown above, HJ Zottel discloses a slidable tray (drawer 24) which is mounted under the work surface platform (desk top 10). A POSITA will understand that drawers are a common feature that can be (and often is) added to any desk design, for instance the desktop shown in HJ Zottel. Thus, the addition of a drawer to mount under a desk top surface is not inventive in the slightest as this type of design has been well known for well over 100 years (see for example US 1,508,259 to I.A. Stafford filed in 1919, or George Washington's desk which is over 200 years old and

has drawers mounted under the desk surface[208]). Further, a POSITA will understand that drawers are commonly designed to slide in to a stored position or out into a open position. For example, Figure 1 of HJ Zottel shows drawer 24 in a stored position and drawer 26 slid out into an open position. As the tray is mounted to the underside of the work surface platform, a POSITA will further understand that when open, the bottom surface of the tray (drawer 24) will be outward and lowered with respect to the work surface platform.

1c. a base configured to sit on an existing platform; and	**YES:** Yamamoto in view of Zhang, discloses a base configured to sit on an existing platform.

Yamamoto discloses a base configured to sit on an existing platform.

FIG. 2A

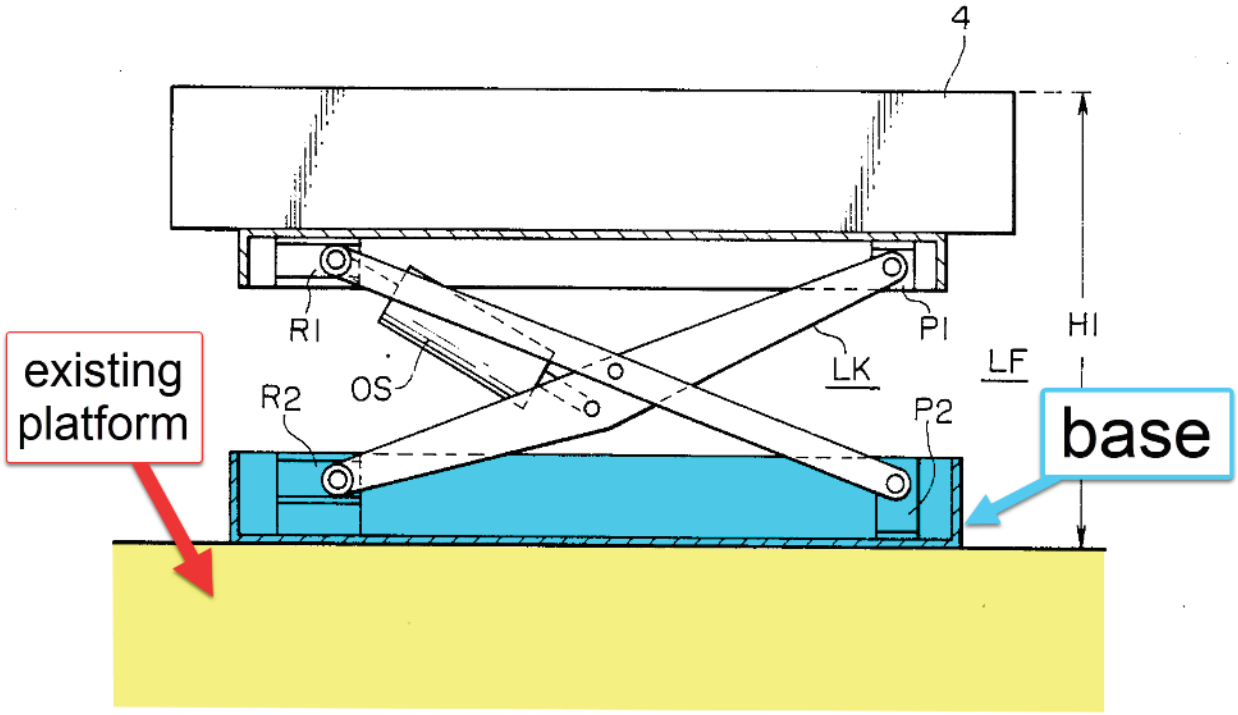

[208] <https://emuseum.mountvernon.org/objects/414/tambour-writing-table-and-bookcase> Dec 19, 2024

"The conventional fluidized bed has a fixed height. However, there has been a demand for a fluidized bed having an adjustable height, specifically, one in which the height of the bed above the floor can be made as small as possible for ease in transferring a patient onto the bed or when a patient gets onto or off the bed, and placed at a suitable height when the patient is lying on the bed for administering treatment to the patient." Yamamoto 1:53-60

As shown, above, Yamamoto discloses a base which supports the Yamamoto mechanism on the floor, i.e. an existing platform. Whether the floor is the foundation of a base floor or a floor several stories up, a POSITA will easily recognize that a floor is an existing platform.

Zhang also discloses a base configured to sit on an existing platform.

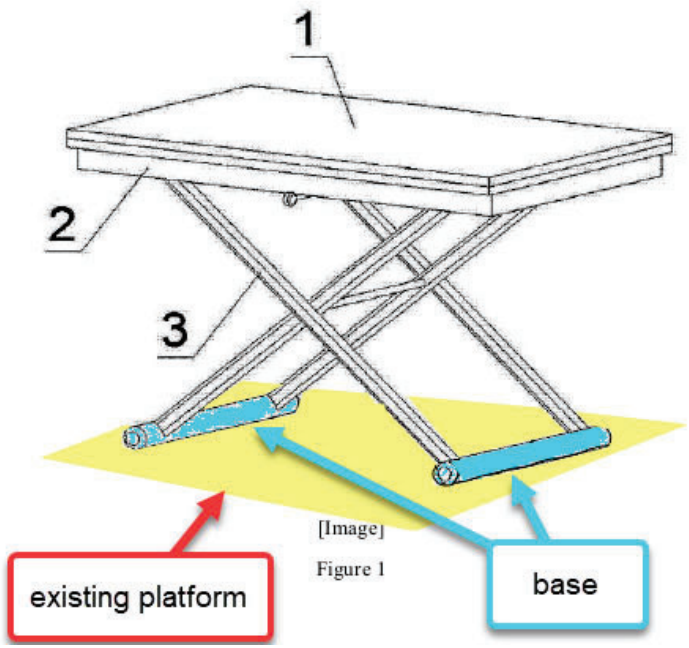

[Image]

Figure 1

Zhang describes a height-adjustable table with *"'X' – shaped cross metal feet." Zhang [0002].* A POSITA would easily recognize that a desk or table requires feet, legs, or a base that are used to support the table. Additionally, a POSITA will understand that the feet are provided to support the table by coming into contact with an existing surface below. As explained above, whether the platform is a floor, a separate table or desk, a POSITA would recognize those as an existing platform.

1d. a height adjustment mechanism connecting the work surface platform and the base, the height adjustment mechanism including:	**YES:** Yamamoto in view of Zhang discloses a height adjustment mechanism connecting the work surface platform and the base.

Yamamoto discloses a height adjustment mechanism:

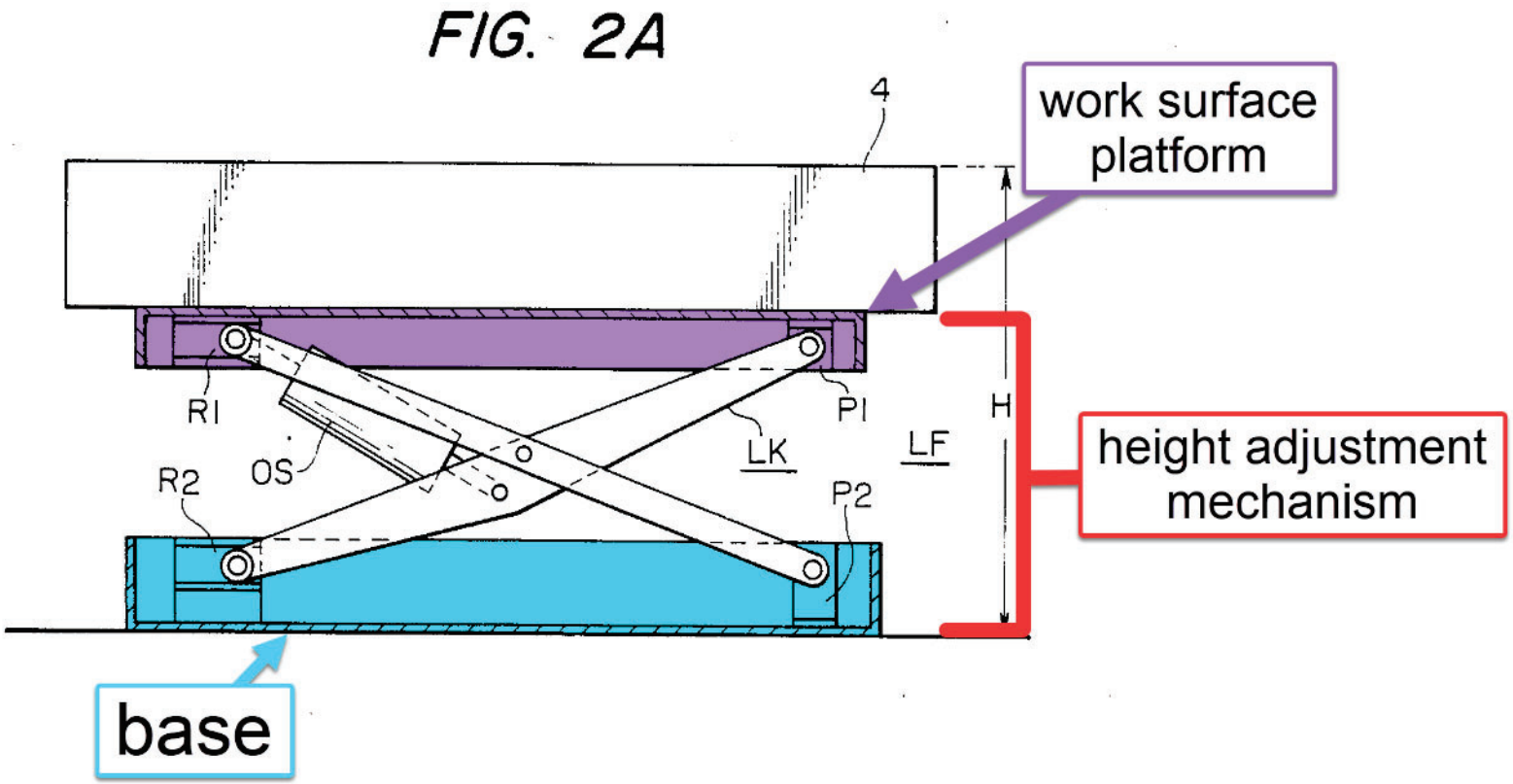

"FIG. 2 illustrates the arrangement of such a mechanism for producing vertical movement. The height of the fluidized bed, and hence the height of the tank 4, are freely adjustable by a lifter LF between a maximum height H1 and a minimum height H2. The lifter LF includes a link mechanism LK having bearings P1 and P2 fixed to ends thereof and rollers R1 and R2 on opposite ends thereof which are movable along a guide rail." Yamamoto 1:63-2:3

The Zhang mechanism uses a combination of a scissor linkage and locking gas springs to serve as a height adjustment mechanism. The height adjustment mechanism connects the work surface platform to the base.

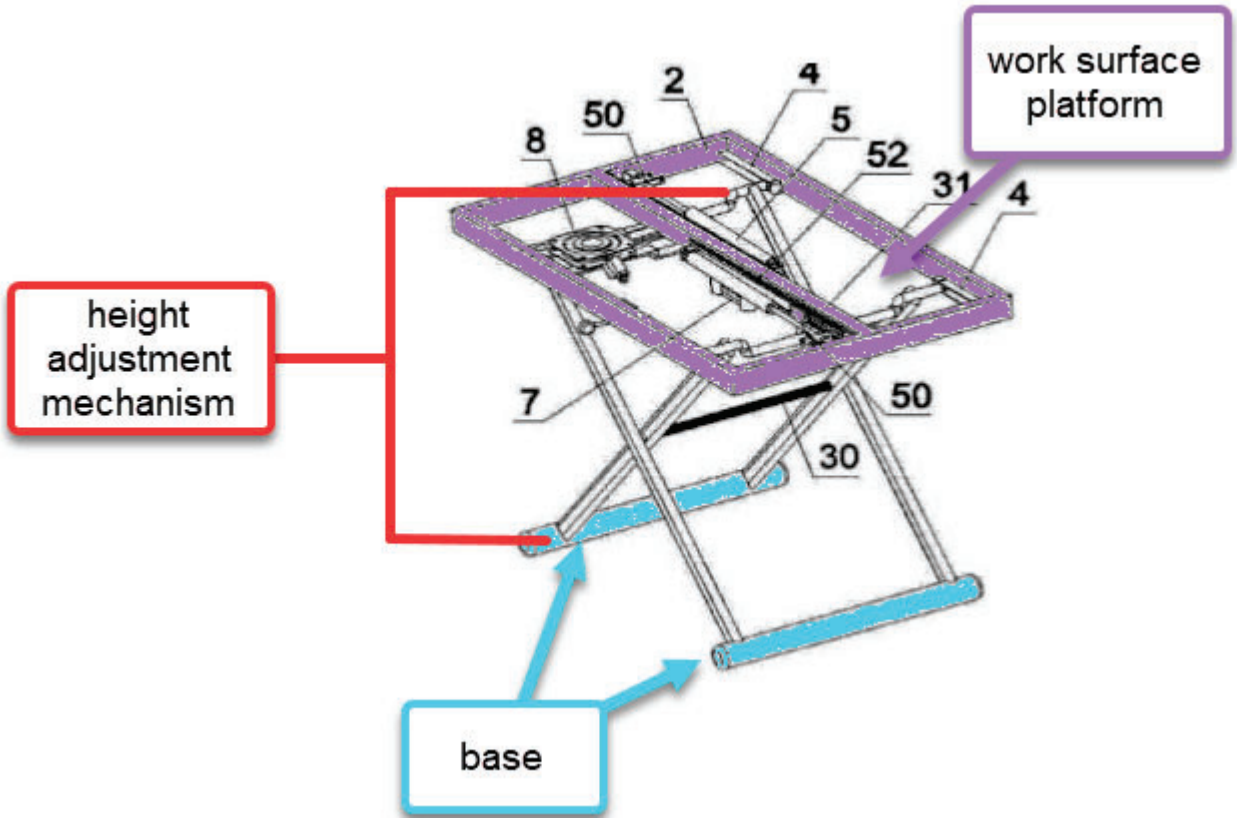

"The two upper ends of the "X" - shaped cross movable metal feet (3) are connected to the platform (2) There are also air support rods (5) connected between the two ends, where the movable rod end (50) of the air support rod (5) is rotatably connected to the upper end of the "X" - shaped cross movable metal foot (3), and the fixed end (51) of the air support rod (5) is connected to the sliding rod of the slide rail (52)." Zhang [0004]

As shown above, both Zhang and Yamamoto disclose a height adjustment mechanism that connects the work surface platform and the base. A POSITA will recognize that both Zhang and Yamamoto use a scissor linkage in combination with one or more cylinder style force actuators and that the height adjustment mechanism of Yamamoto could be used in the Zhang mechanism and vice versa.

1d1. a set of pivot arms that connect at a scissoring pivot point creating a scissoring motion when raising and lowering the work surface platform to various heights;	**YES:** Both Yamamoto and Zhang have a set of pivot arms that connect at a scissoring pivot point creating a scissoring motion when raising and lowering the work surface platform to various heights.

Yamamoto discloses a set of pivot arms that connect at a scissoring pivot point creating a scissoring motion when raising and lowering the works surface platform to various heights. For example, the pivots arms and scissoring pivot point are shown below:

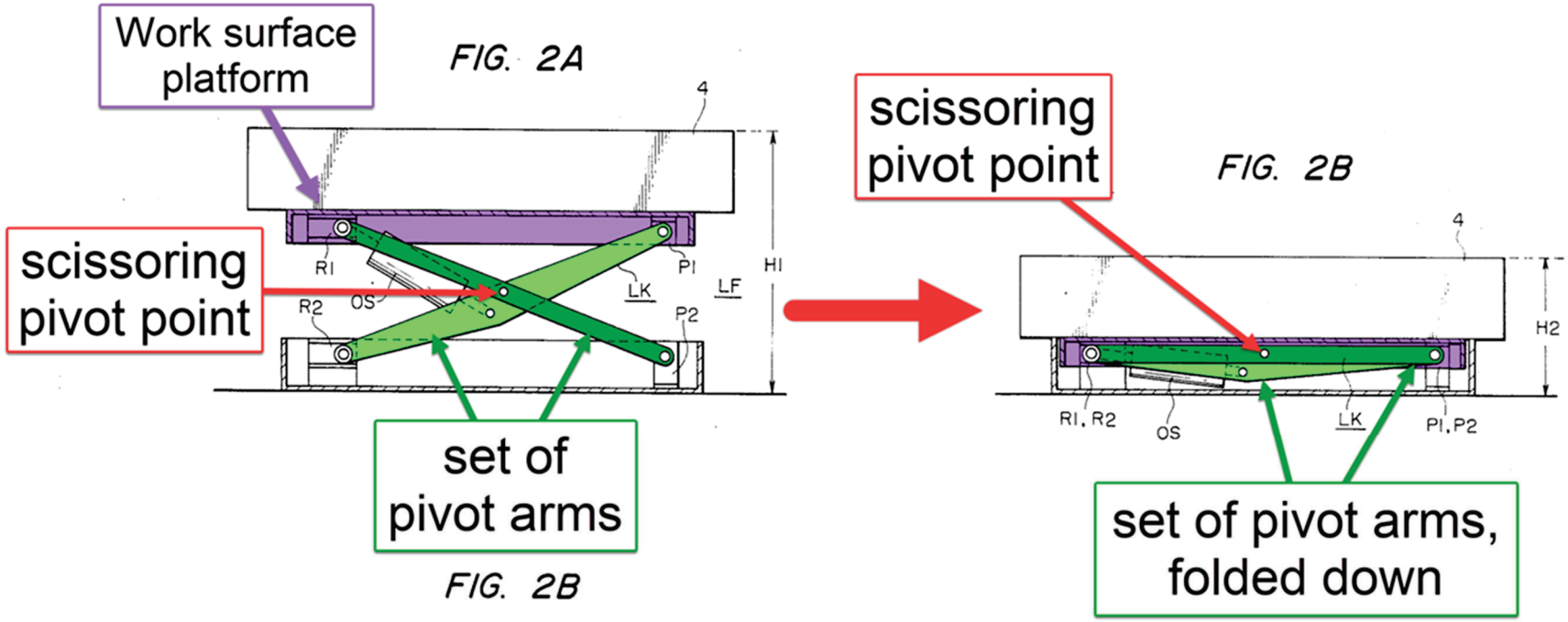

"FIG. 2 illustrates the arrangement of such a mechanism for producing vertical movement. The height of the fluidized bed, and hence the height of the tank 4, are freely adjustable by a lifter LF between a maximum height H1 and a minimum height H2. The lifter LF includes a link mechanism LK having bearings P1 and P2 fixed to ends thereof and rollers R1 and R2 on opposite ends thereof which are movable along a guide rail."
Yamamoto 1:63-2:3

As shown above, Yamamoto discloses a set of pivot arms. These are connected in a linkage making a scissor mechanism which is used to lift the patient bed and to set it at various heights. As the lifting mechanism is moved up and down, the pivot arms move with a scissoring motion. Between Figures 2A and 2B the same mechanism is shown in two different states of lift. By comparing the positions of the pivot arms, it can

clearly be seen that scissoring motion takes place to move the lift mechanism from the position shown in Figure 2A to the position shown in Figure 2B.

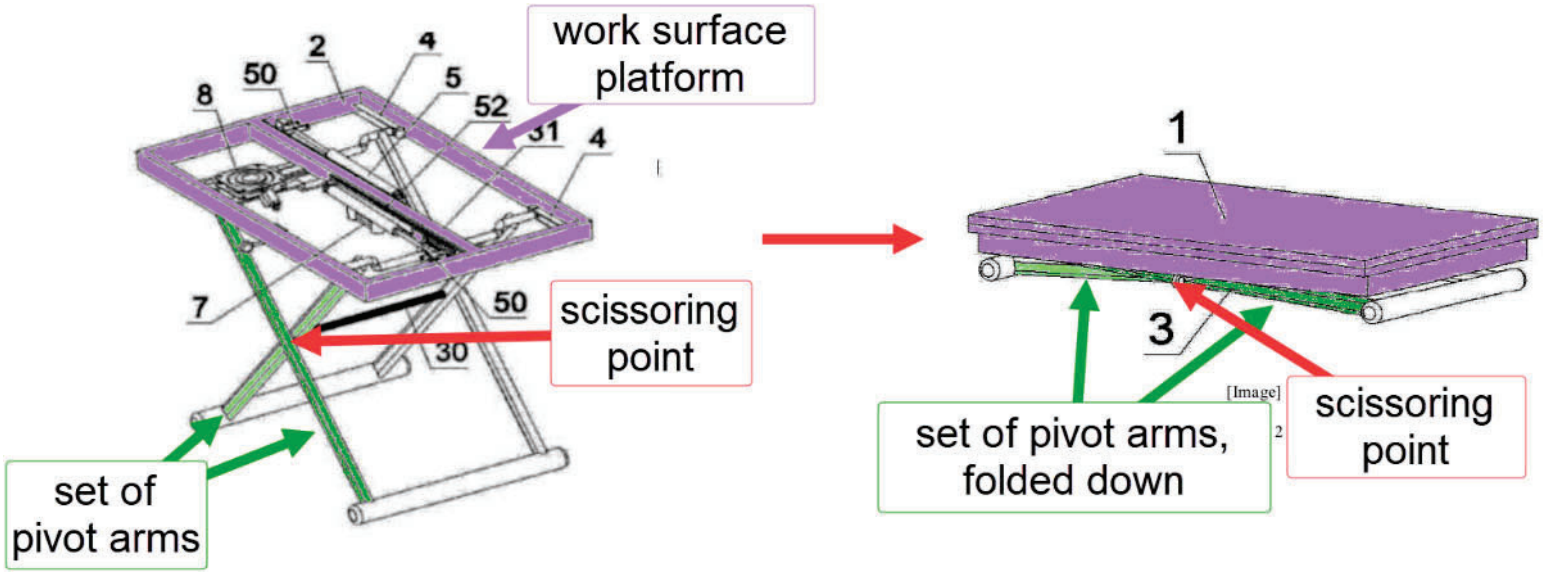

As shown above, Zhang discloses a set of pivot arms, shown as item 3 above. These legs connect at a scissoring point. Together, these legs create a scissoring motion when raising and lowering the work surface to various heights. The figure on the left shows a raised position, and the figure on the right shows a lowered position.

"The platform (2) has not yet opened the upper ends of the "X" - shaped cross movable metal feet (3) to both sides to prevent the rapid lowering of the desktop (1), and the elastic buffering mechanism (7) is fixed in the middle of the platform (2), with the lower end facing ***the pivot shaft (30) in the middle of the "X" - shaped cross movable metal feet (3).*** *" Zhang [0005] emphasis added*

As shown in the citations above, the Zhang mechanism has a set of pivot arms that connect at a scissoring point. These leg members form a scissor mechanism that adjusts the work surface platform to various heights.

A POSITA would understand that scissor mechanisms are suitable for vertical lifting applications such as Yamamoto and Zhang. Scissor mechanisms are well-known and are very commonly built with two sets of pivots arms.

1d2. a base pivot point fixed relative to the base and connecting the base and the set of pivot arms;	**YES:** Yamamoto discloses a base pivot point fixed relative to the base and connecting the base and the set of pivot arms.

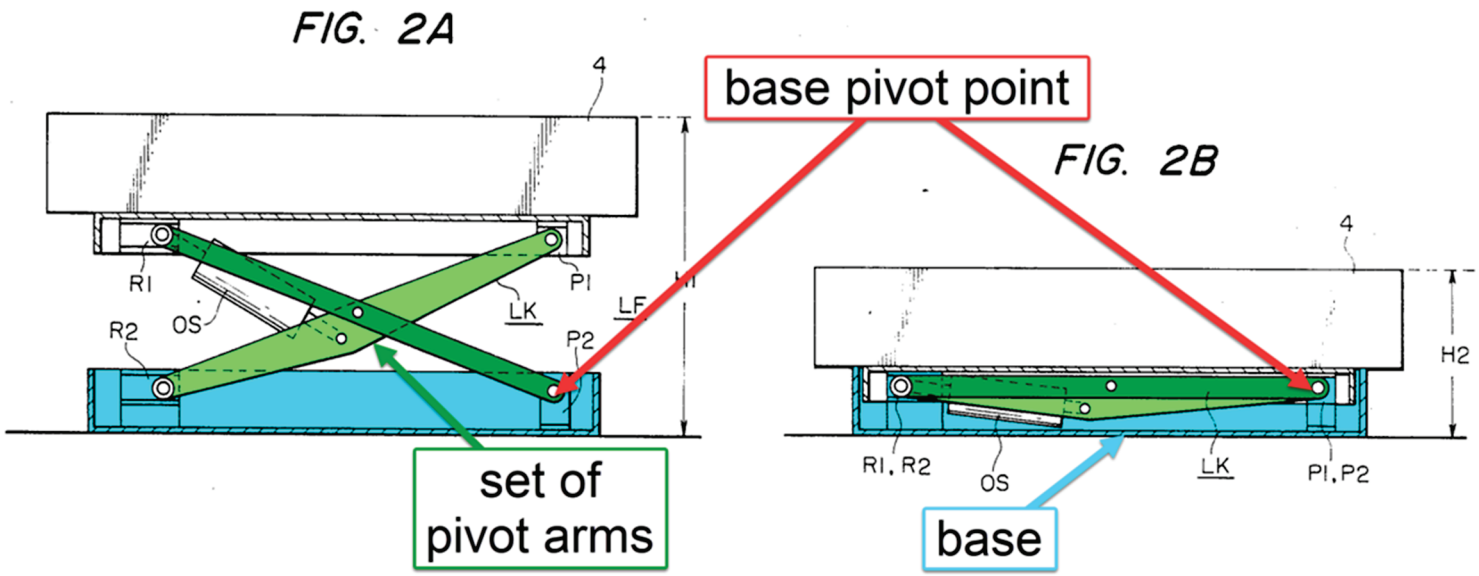

"FIG. 2 illustrates the arrangement of such a mechanism for producing vertical movement.
The height of the fluidized bed, and hence the height of the tank 4, are freely adjustable by a lifter LF between a maximum height H1 and a minimum height H2. The lifter LF includes a link mechanism LK having bearings P1 and P2 fixed to ends thereof and rollers R1 and R2 on opposite ends thereof which are movable along a guide rail." Yamamoto 1:63-2:3

As shown above, Yamamoto discloses a base pivot point which connects the base and the set of pivot arms. A POSITA will understand that this is ubiquitous with scissor lift mechanism design. It is a required part of any scissor lift mechanism that is fixed to a base as it is one of the main supports for the entire lift mechanism.

1d3. a platform pivot point fixed relative to the work surface platform and connecting the work surface platform and the set of pivot arms;	**YES:** Yamamoto discloses a platform pivot point fixed relative to the work surface platform and connecting the work surface platform and the set of pivot arms.

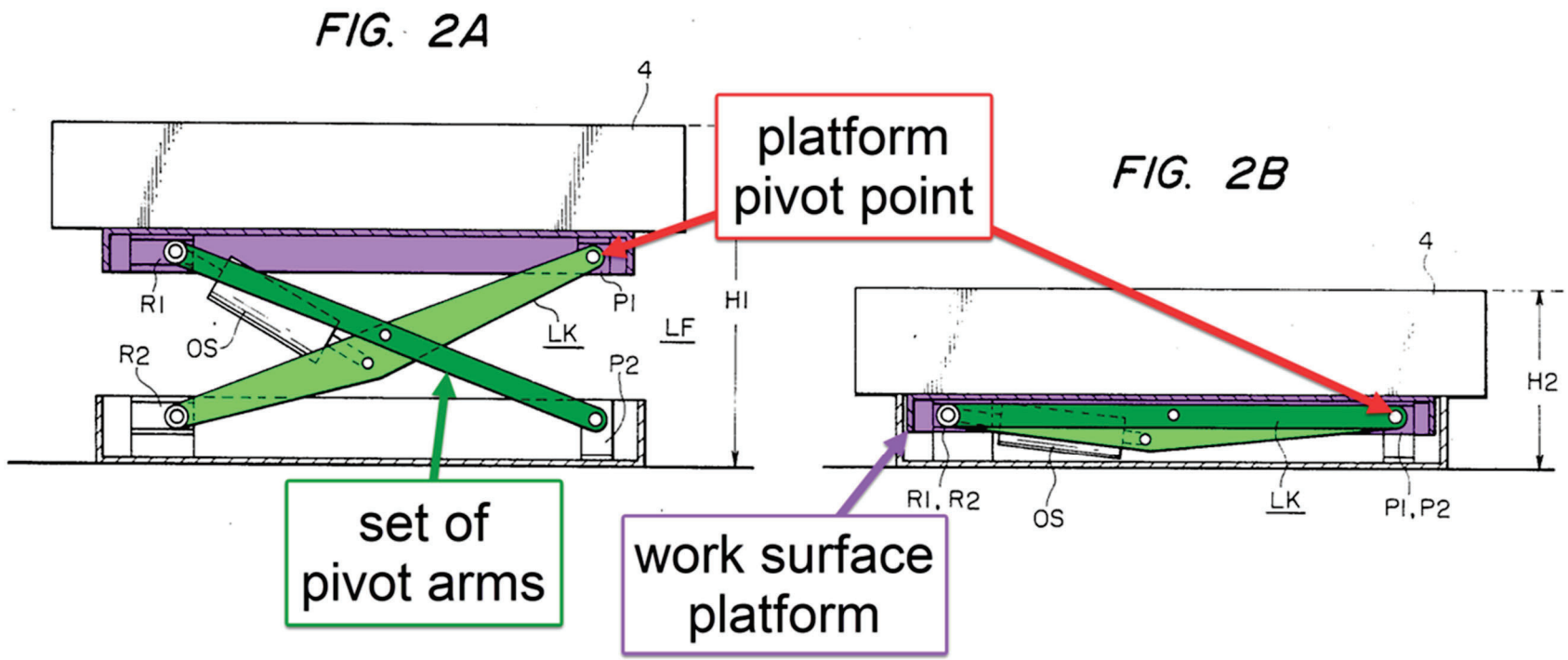

"The lifter LF includes a link mechanism LK having bearing P1 and P2 fixed to ends thereof and rollers R1 and R2 on opposite ends thereof which are movable along a guide rail" Yamamoto 1:68-2:3

As shown in the figure above, Yamamoto discloses a platform pivot point as element P1 shown above. As discussed previously, this platform pivot point is ubiquitous in scissor lift linkage design. Yamamoto discloses it and a POSITA would understand this pivot point exists merely by knowing that a scissor lift mechanism is involved in the design.

1d4. a sliding mechanism on an end of an arm of the set of pivot arms between the end of the arm and either the work surface platform or the base; and	**YES:** Both Yamamoto and Zhang disclose a sliding mechanism on an end of an arm of the set of pivot arms between the end of the arm and either the work surface platform or the base.

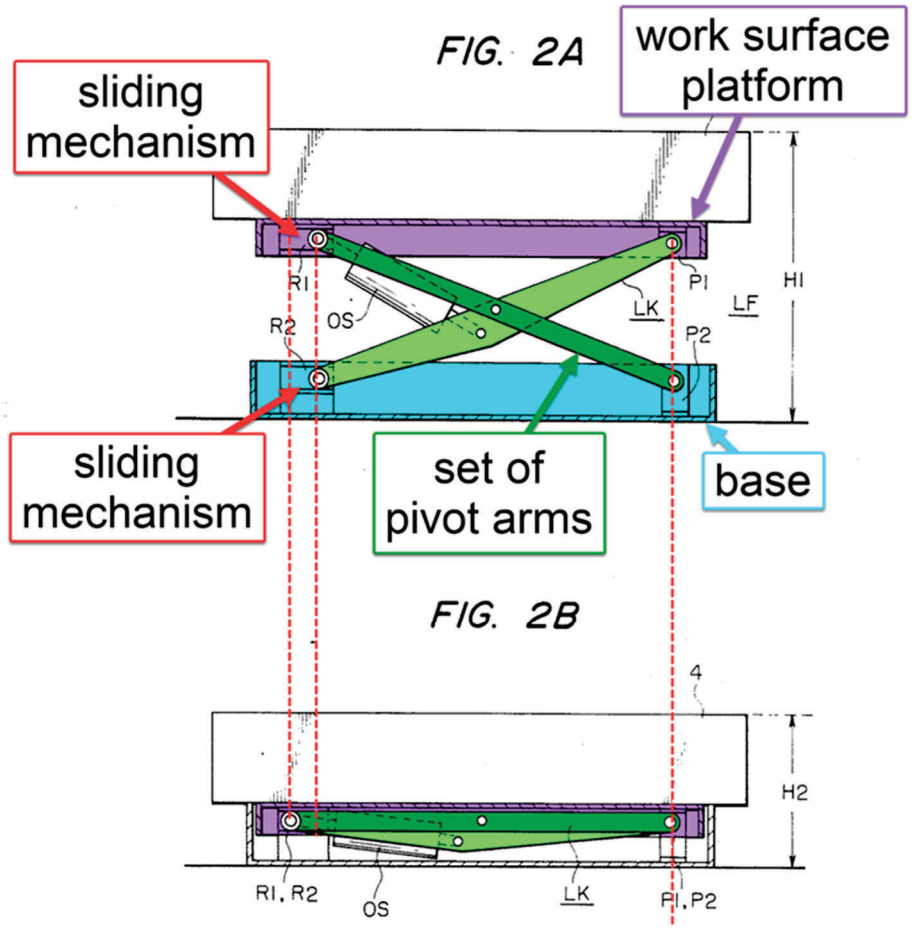

"The lifter LF includes a link mechanism LK having bearing P1 and P2 fixed to ends thereof and rollers R1 and R2 on opposite ends thereof which are movable along a guide rail" Yamamoto 1:68-2:3

As shown in the figure above, Yamamoto discloses a set of rollers R1 and R2 which allow for what the '926 patent considers to be sliding (i.e. translating) movement as is well-known and ubiquitous in the design of a common scissor lift linkage. It is kinematically necessary as a part of the design of a scissor lift linkage to allow these pivot points to move in this way. Yamamoto discloses an extremely common arrangement where these pivot points translate both in the top and the bottom. That is to say between the scissor links and the work surface platform as well as

between the scissor links and the base. Further, as can be seen in Figures 2A and 2B above, Yamamoto teaches the use of a sliding mechanism both between the end of the pivot arms and the work surface platform as well as between the end of the pivot arms and the base.

"a set of horizontal guide rails (4) are respectively provided at both ends of the stand (2), and the left and right upper ends of the "X" – shaped cross movable metal foot (3) are respectively placed in the horizontal position so as to slide left and right." Zhang [0004]

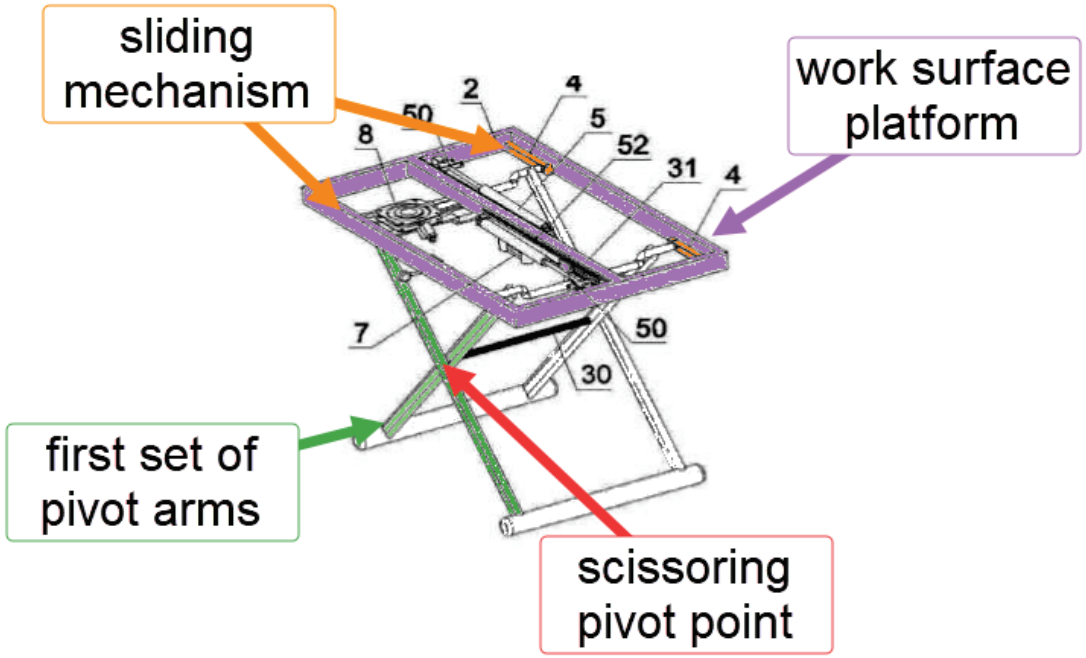

Zhang discloses a sliding mechanism between the end of a pivot arm and the work surface platform—element 4 shown above, described as "horizontal guide rails." These guide rails allow for the ends of the pivot arms to both slide laterally and rotate, which provide the means to vertically adjust the height of the work surface platform.

1d5. a gas spring that assists in elevation of the work surface platform by applying a force to rotate one of the set of pivot arms as part of the scissoring motion,	**YES:** Yamamoto in view of Zhang discloses a gas spring that assists in the elevation of the work surface platform by applying a force to rotate one of the set of pivot arms as part of the scissoring motion.

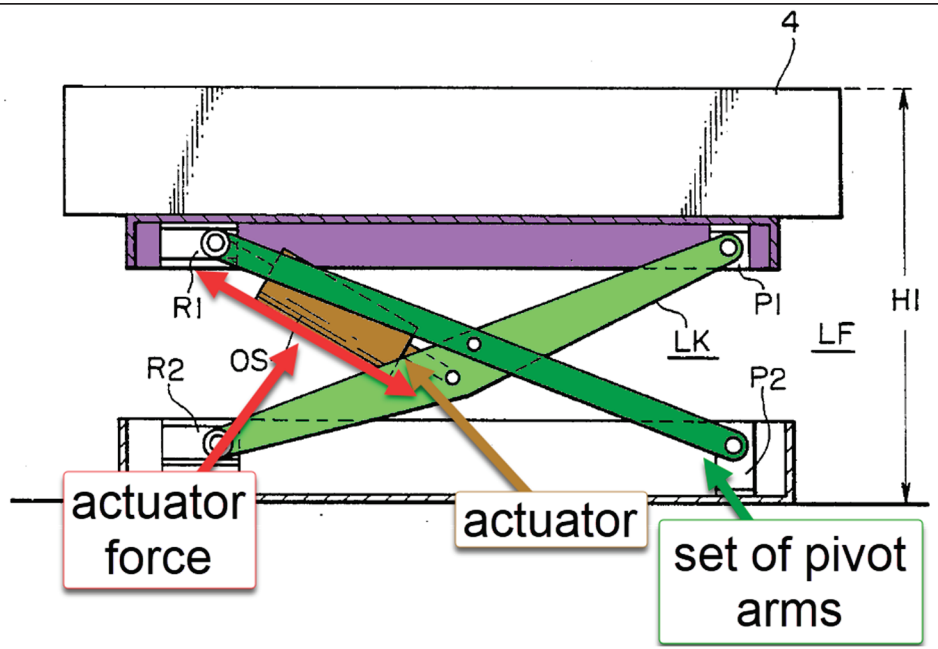

"A hydraulic cylinder OS serves as a vertical drive unit for extending and retracting the link mechanism LK." Yamamoto 2:3-5

Yamamoto discloses a hydraulic cylinder, or actuator, that assists in the elevation of the platform. It applies a force between one of the set of pivot arms and the work surface platform.

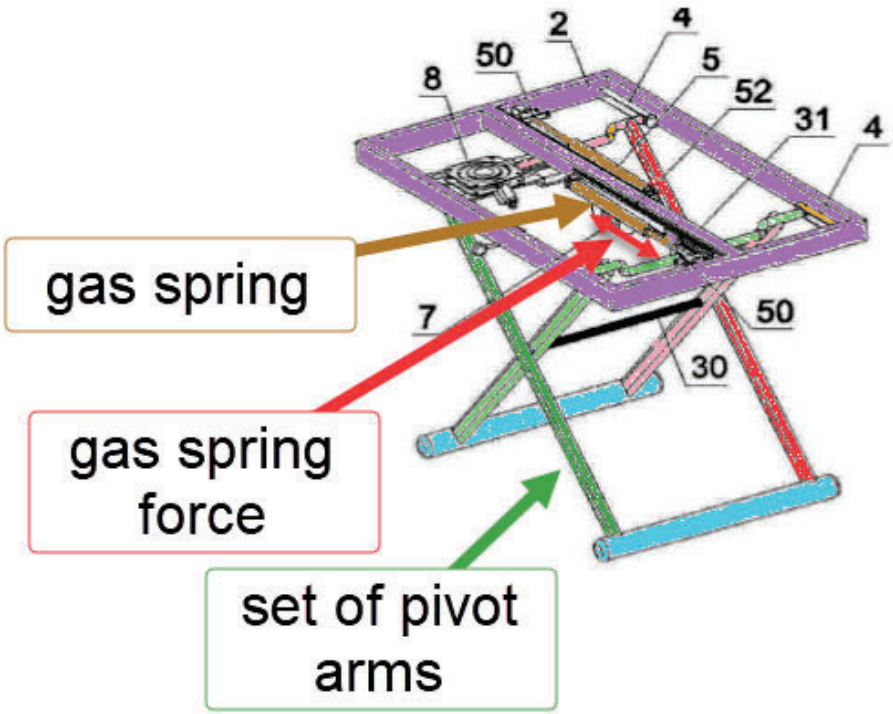

"The two upper ends of the "X" - shaped cross movable metal feet (3) are connected to the platform (2) There are also air support rods (5) connected between the two ends, where the movable rod end (50) of the air support rod (5) is rotatably connected to the upper end of the "X" - shaped cross movable metal foot (3), and the fixed end (51) of the air support rod (5) is connected to the sliding rod of the slide rail (52). The two air support rods (5) are controlled by a pull switch (6) to extend and retract the movable rod of the air support rod (5)." Zhang [0004]

As shown in the figure and the citation above, Zhang discloses a gas spring that is used to facilitate the movement of the scissor linkage and therefore work surface platform. As previously discussed, the Zhang specification uses the term "air support rod" to refer to a common locking gas spring. A POSITA will understand that this is a locking gas spring for the reasons previously discussed. The gas springs are used to assist in the raising and lowering of the table.

Yamamoto uses a hydraulic cylinder to assist in the elevation of the work surface platform. As has been discussed previously, a POSITA would be motivated to combine a Yamamoto style linkage while substituting the hydraulic cylinder for one or more of the gas springs of Zhang in order to

simplify the actuation mechanism. A POSITA would understand that a lockable gas-spring is a piston cylinder device, such as the one described in Yamamoto.	
1d6. wherein one end of the gas spring is fixed to the work surface platform, wherein the gas spring acts as a locking device that holds the work surface platform at various vertical heights above the base, and	**YES:** Yamamoto in view of Zhang with the knowledge of a POSITA discloses that one end of the gas spring is fixed to the work surface platform, and wherein the gas spring acts as a locking device that holds the work surface platform at various vertical heights above the base.

FIG. 2A

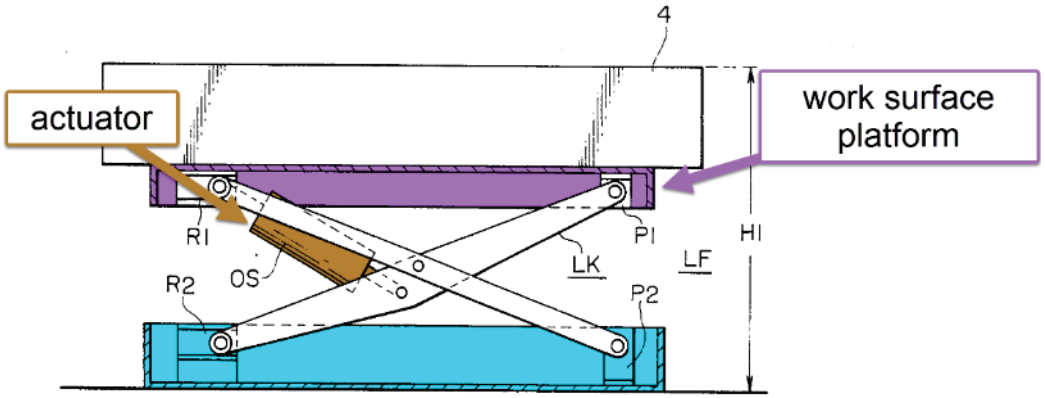

As shown above, the hydraulic cylinder in Yamamoto applies force to the work surface platform via its attachment to the sliding mechanism.

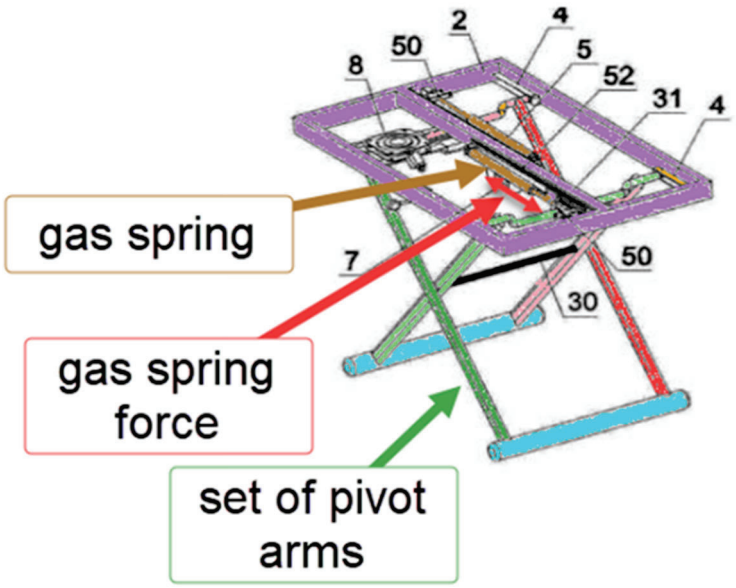

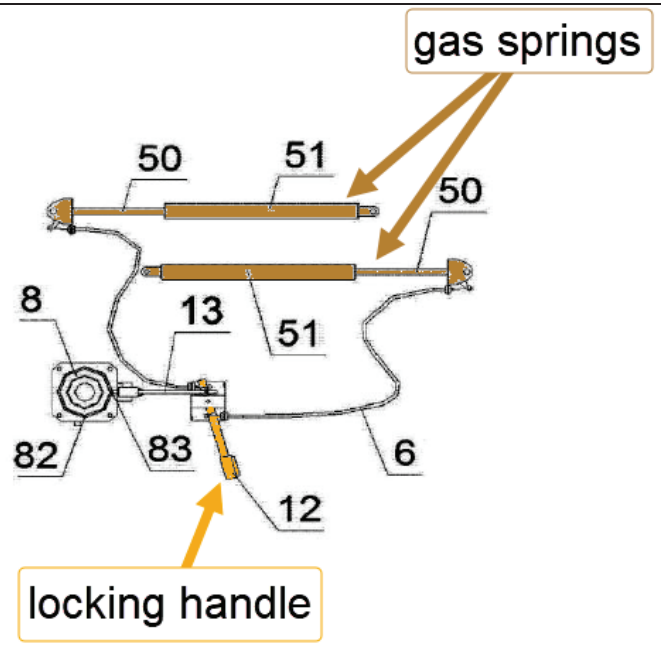

"On one side of the platform (2), there is a swing rod (12) that drives the action of the cable switch (6). The middle of the swing rod (12) is fixed to a fixed frame (12) through a rotating shaft (11). The cable drive end of the cable switch (6) is connected to one end of the swing rod (12). When the swing rod (12) swings, the valve of the driving air rod (5) is opened, and the movable rod end (50) is in a telescopic state; When the swing rod (12) is in a nonstressed state, the valve of the driving air rod (5) is closed, and the movable rod is in a positioning state." Zhang [0007]

As shown above, Zhang discloses the use of a gas spring to facilitate the movement of the scissor linkage. Specifically, the gas-spring cited is a locking gas-spring. The lock is engaged via locking handle, element 12, and Bowden cables, element 6, as shown above in the graphic on the right. These locking gas springs, as discussed previously, are a well-known off-the-shelf component that any POSITA would be very familiar with. Engaging those locks via the use of Bowden cables is a standard mechanism used in various devices—one example is their use in bicycle brakes and gear shifters. As Zhang describes, the locking gas spring is used to set the work surface platform at various heights in ordinary usage of the Zhang apparatus. A POSITA will understand that a hydraulic cylinder, such as used by Yamamoto is also a piston cylinder device that can be used to lock the vertical position of the platform at any height within its ordinary range of motion. As discussed previously, a POSITA would be motivated to combine the locking gas springs of Zhang with the linkage of Yamamoto. Further, as discussed previously, a POSITA would be motivated to connect the rod end of the locking gas spring directly to the work surface platform as this would greatly simplify the locking actuation

method. When one end of the gas spring is mounted directly to the work surface platform, the rod end will be stationary relative to the work surface platform and would allow the use of a simple locking handle rather than the use of Bowden cables as used in Zhang.

For example, a POSITA would be familiar with the Lindahl reference which teaches mounting of the gas spring to the work surface platform. Fixing directly to the work surface platform allowed Lindahl to use a simple lever as its gas spring locking mechanism, rather than hydraulics or Bowden cables. See below for the description of the gas spring used in Lindahl. For example, Lindahl teaches the following:

"An essential feature of the invention is that a blockable gas-spring 17, or piston-cylinder device is provided for enabling the position of the frame-like part 1 to be adjusted vertically in a smooth continuous fashion, both in an upward and in a downward direction. The gas-spring includes a bottom part 18 which is pivotally connected to the leg member 3 beneath the pivot rod 12, and an upper part 19 which is pivotally connected to the transverse frame-bar 15 on the same side of a vertical plane passing through the rod 12 as the lower part 18 (see also Figures 3, 4)." Lindahl 4:5-15

"The operating means 24 has an elongated shape and has a handle 26 provided on the rear thereof and a part 27 which function to engage the end of the pin 20 on the front thereof. ... This fact enables the gas-spring to be operated effectively. When the pin 20 is pressed inwardly by means of the operating means 24, the release valve in the gas-spring will open. The gas-spring is thereby compressed with a force which is greater than the resistance exerted by the gas-spring, which takes place when the stand is to be pressed down to a low level. If it is wished to maintain the stand at this low level, the pressure on the pin is removed, thereby causing the pin to return to its starting position. This closes the release valve in the gas-spring and the spring will thereby be blocked and function as a rigid rod. When wishing to raise the stand, the pin 20 is pressed-in by means of the operating means 24, thereby raising the frame part of the stand to the desired position, whereafter the pressure on the pin 20 is removed." Lindahl 5:8-6:8 (emphasis added)

A POSITA would be motivated to use the linkage of Yamamoto, one or more gas springs of Zhang, and mount the spring(s) directly to the work surface platform, based on their ordinary familiarity with common scissor linkage design with or without the teachings of Lindahl. A POSITA may further also consider the teachings of Lindahl as shown in the Lindahl example, in order to eliminate the need for hydraulic lines or Bowden cables, thereby simplifying the assembly.

1d7. wherein the gas spring is under the work surface platform and above the existing platform.	**YES:** Yamamoto in view of Zhang discloses that the gas spring is under the work surface platform and above the existing platform.

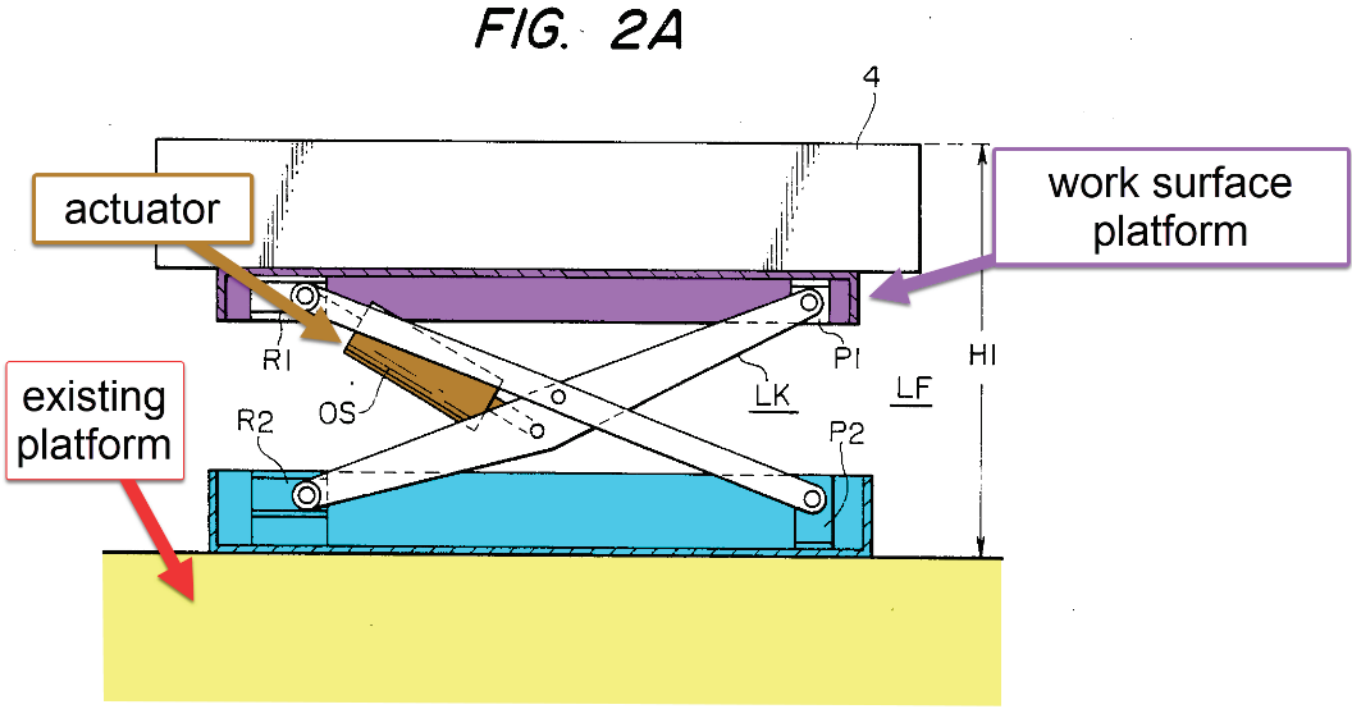

"A hydraulic cylinder OS serves as a vertical drive unit for extending and retracting the link mechanism LK." Yamamoto 2:3-5

As is shown in above, Yamamoto discloses a hydraulic cylinder that is positioned under the work surface platform and above the existing platform.

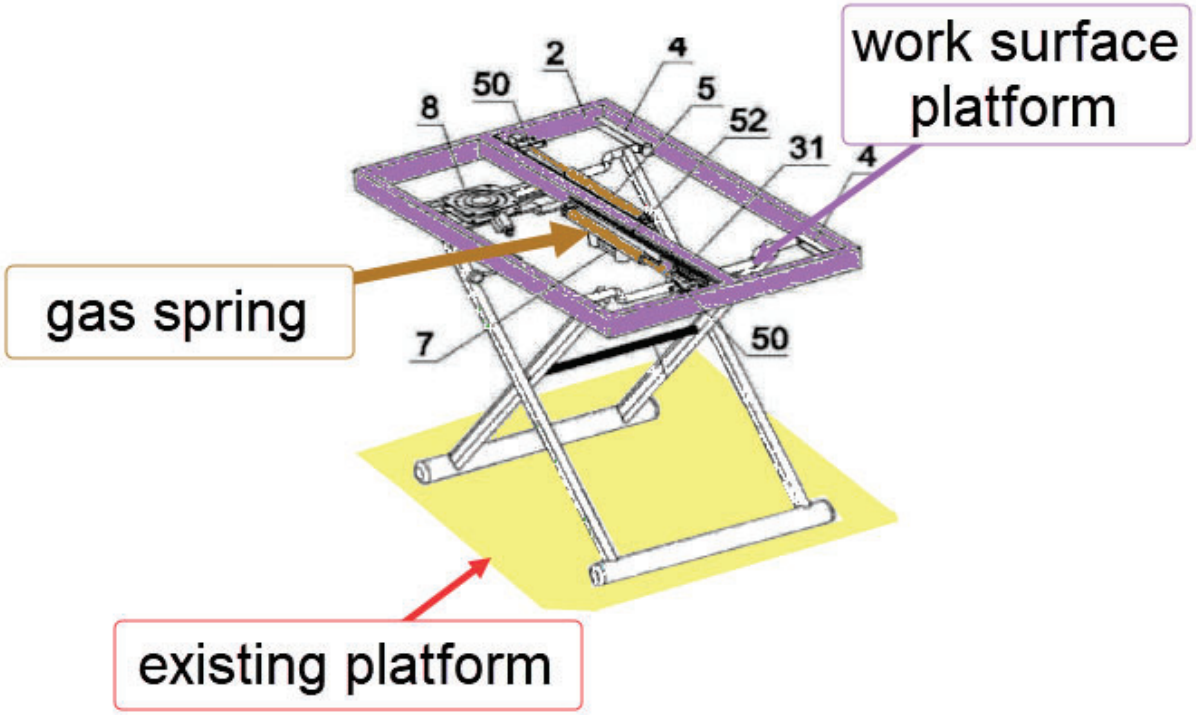

"There are also air support rods (5) connected between the two ends, where the movable rod end (50) of the air support rod (5) is rotatably connected to the upper end of the "X" - shaped cross movable metal foot (3), and the fixed end (51) of the air support rod (5) is connected to the sliding rod of the slide rail (52)." Zhang [0004]

As shown above, Zhang discloses a scissor lift platform with a gas spring. As can be seen in the figure above, the gas spring is located underneath the work surface platform. As can also be seen in the figure above, the gas spring is located above the existing platform.

A POSITA will understand that a hydraulic cylinder, such as used by Yamamoto is also a piston cylinder device that can be used to lock the vertical position of the platform at any height within its ordinary range of motion. As discussed previously, a POSITA would be motivated to combine the locking gas springs of Zhang with the linkage of Yamamoto. Further, as discussed previously, a POSITA would be motivated to connect the rod end of the locking gas spring directly to the work surface platform as this will provide greater ease of use.

2P. The desktop workspace of claim 1,	**YES:** As shown above, Yamamoto in view of Zhang, and in further view of HJ Zottel discloses the desktop workspace of claim 1.
2a. wherein the slidable tray is mounted to an underside of the work surface platform with a slider such that the slidable tray is selectively positionable between the stored position under the work surface platform and the extended position that is outward and lowered with respect to the work surface platform,	**YES:** Yamamoto in view of Zhang, and in further view of HJ Zottel and the knowledge of a POSITA discloses that the slidable tray is mounted to an underside of the work surface platform with a slider such that the slidable tray is selectively positionable between the stored position under the work surface platform and the extended position that is outward and lowered with respect to the work surface platform.

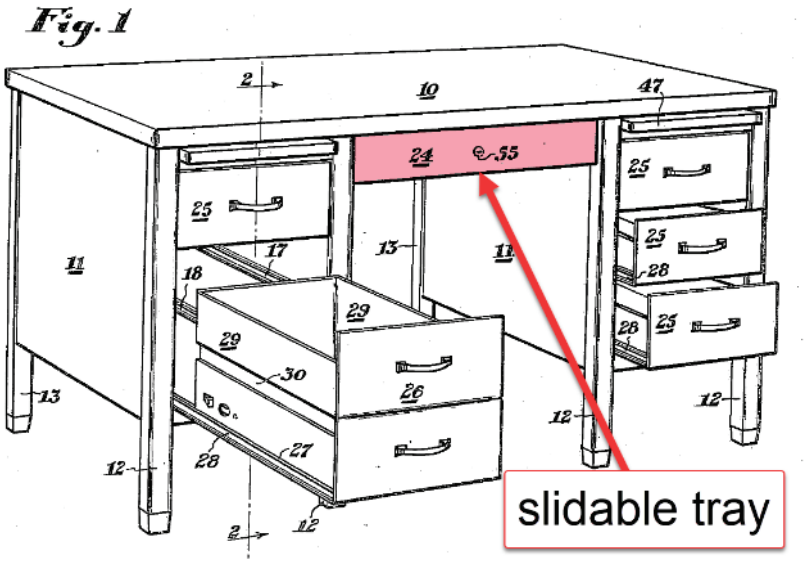

209

"The primary objects of the instant invention are to provide a desk having a plurality of box drawers and one or more vertical letter file drawers…" HJ Zottel 1:4-6

"The desk comprises a top 10 supported by drawer supporting pedestals 11 having front legs 12 and rear legs 13 attached thereto" HJ Zottel 1:47-50

"As best shown in Figure 1, the desk is provided with a center drawer 24 between the pedestals 11" HJ Zottel 2:9-11

[209] HJ Zottel Figure 1, annotated

As shown above, HJ Zottel discloses a slidable tray (drawer 24) which is mounted under the work surface platform (desk top 10). As discussed previously, when combining the teachigns of HJ Zottel with Yamamoto in view of Zhang, a POSITA will be motivated to use a top-mount drawer style. This is because that is the only reasonable design choice for a POSITA to make with this particular arrangmenet as previously discussed. More generally, drawer mounting style is merely design choice. They can generally be on the bottom, on the side, or on the top with respect to the drawer. For example, US 5,294,087 to Drabczyk discloses an under-desk slider tray wherein the sliders mount directly to bottom of the desk top surface.

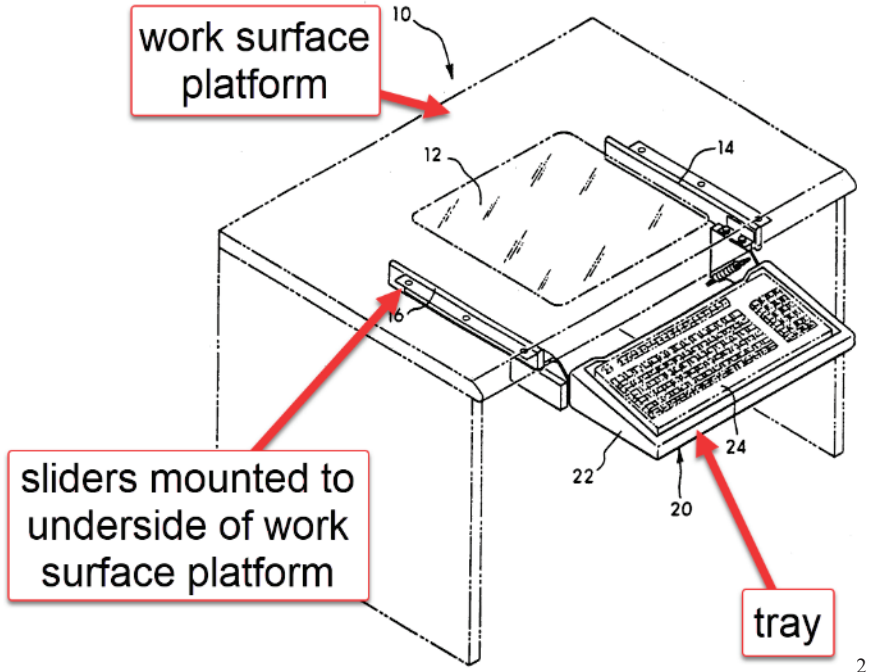

[210]

"Keyboard holder 20 is secured to workstation 10 to slide from an out of the way position beneath the top of workstation 10 to a working position as shown in FIG. 1. Keyboard holder 20, shown in FIG. 1, includes a molded plastic tray 22, which holds most types and sizes of keyboards 24." Drabczyk 3:36-41

[210] Drabczyk Figure 1, annotated

With or without the teachings of Drabczyk, the mounting of slides for drawers is so well-known that a POSITA will recognize the various ways this can be accomplished. Drawers have been known at least since the mid 1600's[211] and the various permutations and mounting styles are well known. A POSITA will further understand that drawers are a common feature that can be (and often is) added to any desk design, for instance the desktop shown in HJ Zottel. Thus, the addition of a drawer to mount under a desk top surface is not inventive in the slightest as this type of design has been well known at least for nearly the last 100 years, as demonstrated by HJ Zottel. Further, a POSITA will understand that drawers are commonly designed to slide in to a stored position or out into a open position. For example, Figure 1 of HJ Zottel shows drawer 24 in a stored position and drawer 26 slid out into an open position. As the tray is mounted to the underside of the work surface platform, a POSITA will further understand that when open, the bottom surface of the tray (drawer 24) will be outward and lowered with respect to the work surface platform.	
2b. wherein the slider includes a channel offset from the underside of the work surface platform, forming a gap between the slidable tray and the underside of the work surface platform.	**YES:** Yamamoto in view of Zhang, and in further view of HJ Zottel and the knowledge of a POSITA discloses that the slider includes a channel offset from the underside of the work surface platform, forming a gap between the slidable tray and the underside of the work surface platform.

[211] <https://www.penderynantiques.co.uk/the-history-of-the-chest-of-drawer/> accessed Dec 20, 2024

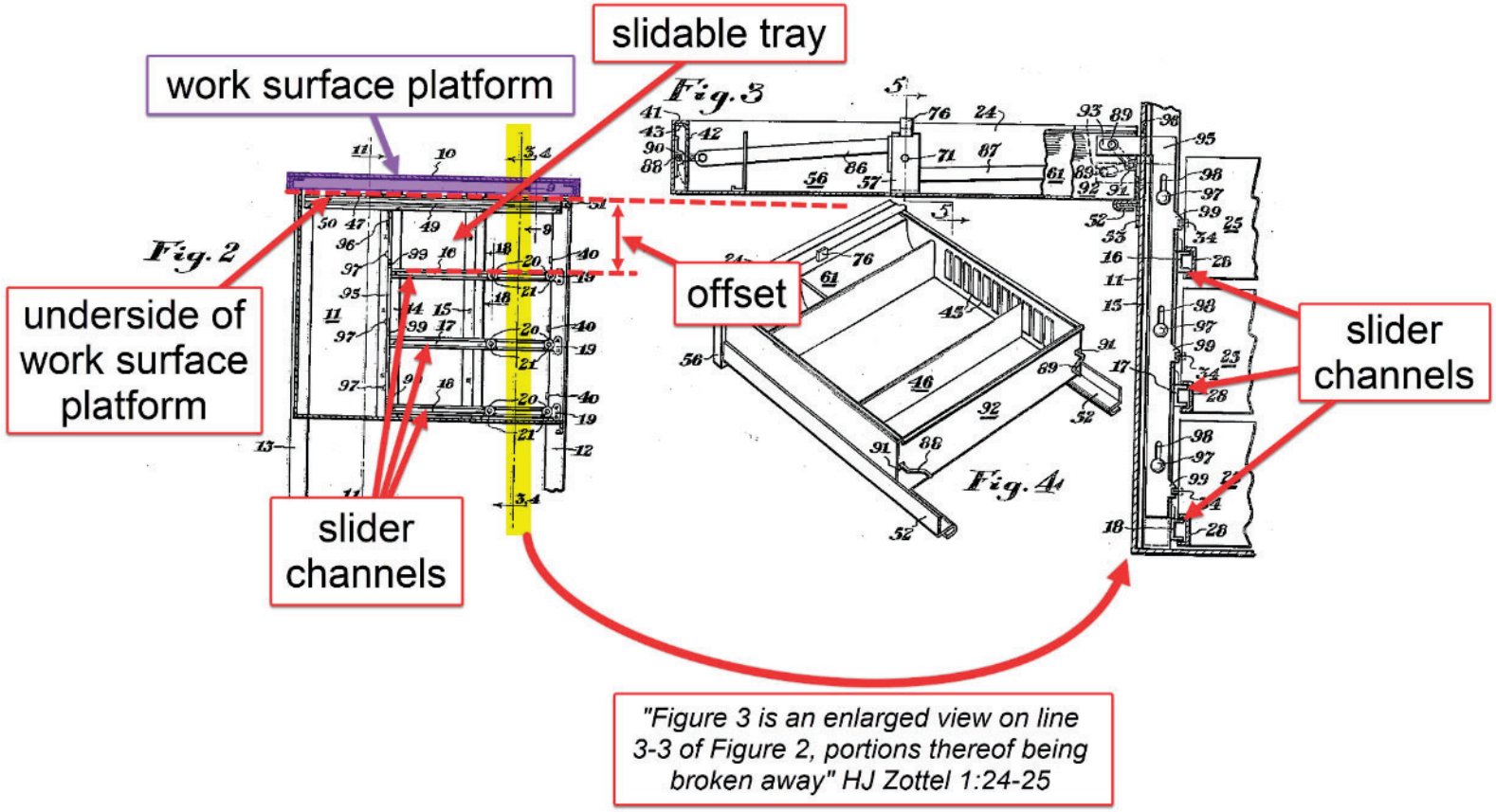

[212]

"Each drawer 25 and 26 is provded with a recess 27 along eah of its lower side edges and channel runners 28 are secured as by spot welding within each recess 27. The runners 28 of each drawer slidably engage a pair of drawer guides 16, 17 or 18 to thus slidably mount each drawer within a pedestal" HJ Zottel 2: 14-20

As shown above, HJ Zottel includes multiple channels (channel runners 28) that are offset from the underside of the work surface platform, forming a gap between the slidable tray and the underside of the work surface platform. As discussed previously, a POSITA will understand the well-known options and permutations of drawer designs and mounting. This includes, for example, mouting on the bottom, the side, or the top of the drawer. As discussed previously, a POSITA will be motivated to use a top-mounted drawer when adding the teachings of HJ Zottel to

[212] HJ Zottel, Figures 2, 3, and 4, combined and annotated

Yamamoto in view of Zhang. When this is done, the channel runners as disclosed by HJ Zottel will be located more towards the top of the drawer as opposed to the bottom.

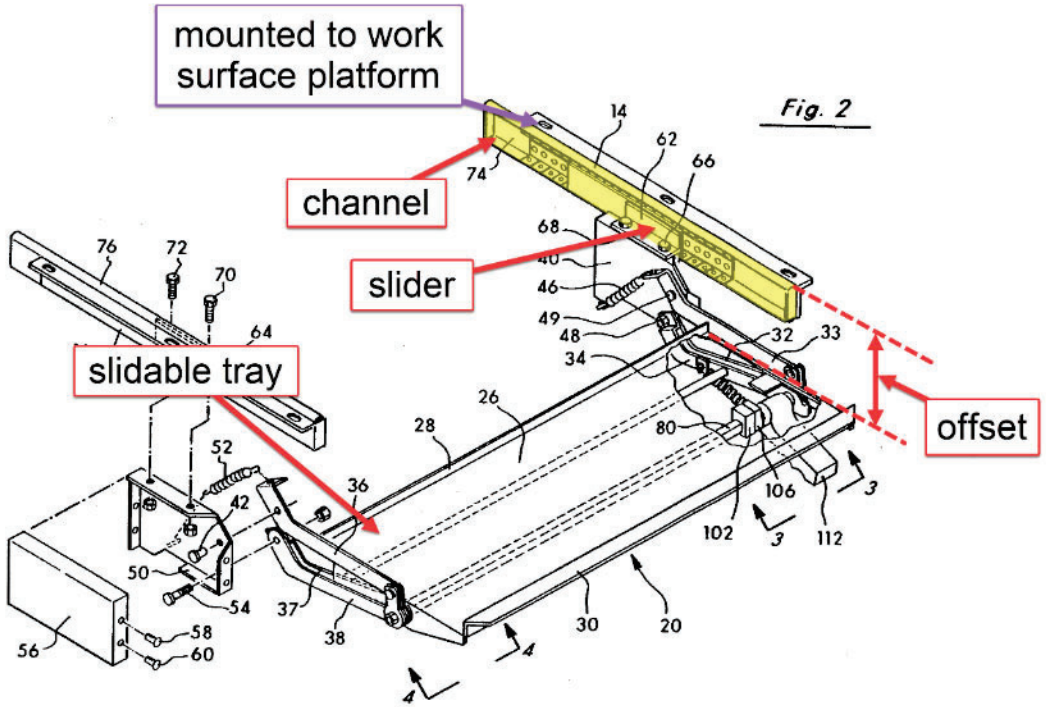

[213]

In addition to this, top-mounted drawers were well known; an example of which is shown in Drabczyk. In particular, Drabczyk Figure 2 shows that there is a channel offset from the underside of the work surface platform.

"Keyboard holder 20 is secured to workstation 10 to slide from an out of the way position beneath the top of workstation 10 to a working position as shown in FIG. 1. Keyboard holder 20, shown in FIG. 1, includes a molded plastic tray 22, which holds most types and sizes of keyboards 24." Drabczyk 3:36-41

"Mounting plates 40, 42 are affixed to slide brackets 62, 64, respectively by bolts 66-72. Slide brackets 62, 64 slide within extendible tracks 74, 76 on mounting brackets 14, 16. ***The design and operation of slide brackets 62, 64 and mounting brackets 14, 16 are conventional in design and***

[213] Drabczyk Figure 2, annotated

<u>are not discussed in any further detail.</u> *Thus, support tray 26, along with keyboard tray 22 and keybaord 24 are movable from an out of the way position beneath the upper surface of workstation 10 to a working position shown in FIG. 1." Drabczyk 3:65-4:6 (emphasis added)*

As shown above, Drabczyk demonstrates a well-known slidable tray arrangement wherein the slider has a channel which is offset from the underside of the work surface platform. This offset forms a gap between the slidable tray and the underside of the work surface platform. Further, I note that Drabczyk describes this arrangemnt as conventional in design, i.e. that it is well-known. Thus, as discussed before, a POSITA would understand with or without Drabczyk that drawers and slidable trays are reguarly mounted and arranged in this way.

3P. The desktop workspace of claim 2,	**YES:** As shown above, Yamamoto in view of Zhang, and in further view of HJ Zottel and the knowledge of a POSITA discloses the desktop workspace of claim 2.
3a. further comprising a bracket fixed to the underside of the work surface platform, wherein the channel is mounted to the bracket such that the channel is offset from the underside of the work surface platform.	**YES:** Yamamoto in view of Zhang, and in further view of HJ Zottel and the knowledge of a POSITA, discloses comprising a bracket fixed to the underside of the work surface platform, wherein the channel is mounted to the bracket such that the channel is offset from the underside of the work surface platform.

As discsused previously, a POSITA will understand the ordinary and customary ways in which drawers are mounted include mounting on the bottom, the side, or the top. When mounted to the top a POSITA will understand that this arrangement will include a bracket that mounts the slider channel to the underside of the work surface platform. This is a natural result in the ordinary course of well-known drawer mounting design.

For example, as discussed previously, top-mounted drawers were well known; an example of which is shown in Drabczyk. In particular, Drabczyk Figure 2 shows that there is a channel offset from the underside of the work surface platform. Specifically, Drabczyk shows a bracket fixed to the underside of the work surface platform and a channel that is mounted to the bracket as shown below:

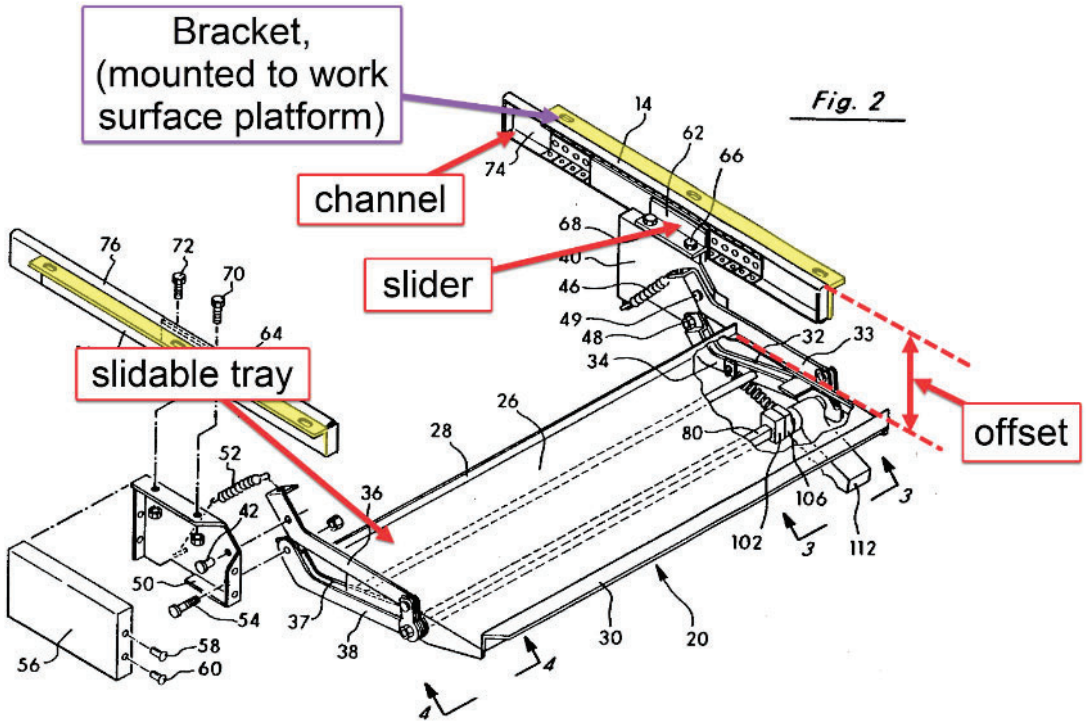

"Keyboard holder 20 is secured to workstation 10 to slide from an out of the way position beneath the top of workstation 10 to a working position as shown in FIG. 1. Keyboard holder 20, shown in FIG. 1, includes a molded plastic tray 22, which holds most types and sizes of keyboards 24." Drabczyk 3:36-41

"Mounting plates 40, 42 are affixed to slide brackets 62, 64, respectively by bolts 66-72. Slide brackets 62, 64 slide within extendible tracks 74, 76 on mounting brackets 14, 16. ***The design and operation of slide brackets 62, 64 and mounting brackets 14, 16 are conventional in design and are not discussed in any further detail.*** *Thus, support tray 26, along with keyboard tray 22 and keybaord 24 are movable from an out of the way position beneath the upper surface of workstation 10 to a working position shown in FIG. 1." Drabczyk 3:65-4:6 (emphasis added)*

As shown above, Drabczyk demonstrates a well-known slidable tray arrangement wherein the slider has a bracket that is fixed to the underside of the work surface platform and fixed to the slider mechanism. This positions the slider channel to be offset from the underside of the work surface platform. This offset forms a gap between the slidable tray and the underside of the work surface platform. Further, I note that Drabczyk describes

this arrangemnt as conventional in design, i.e. that it is well-known. Thus, as discussed before, a POSITA would understand with or without Drabczyk that drawers and slidable trays are reguarly mounted and arranged in this way and would have been motivated to do so.	
4P. The desktop workspace of claim 1,	**YES:** As shown above, Yamamoto in view of Zhang, and in further view of HJ Zottel discloses the desktop workspace of claim 1.
4a. wherein the set of pivot arms is a first set of pivot arms, the desktop workspace further comprising:	**YES:** Both Yamamoto and Zhang disclose a set up pivot arms that is a first set of pivots arms.

Yamamoto also discloses a first set of pivot arms. For example, the pivots arms and scissoring pivot point are shown below:

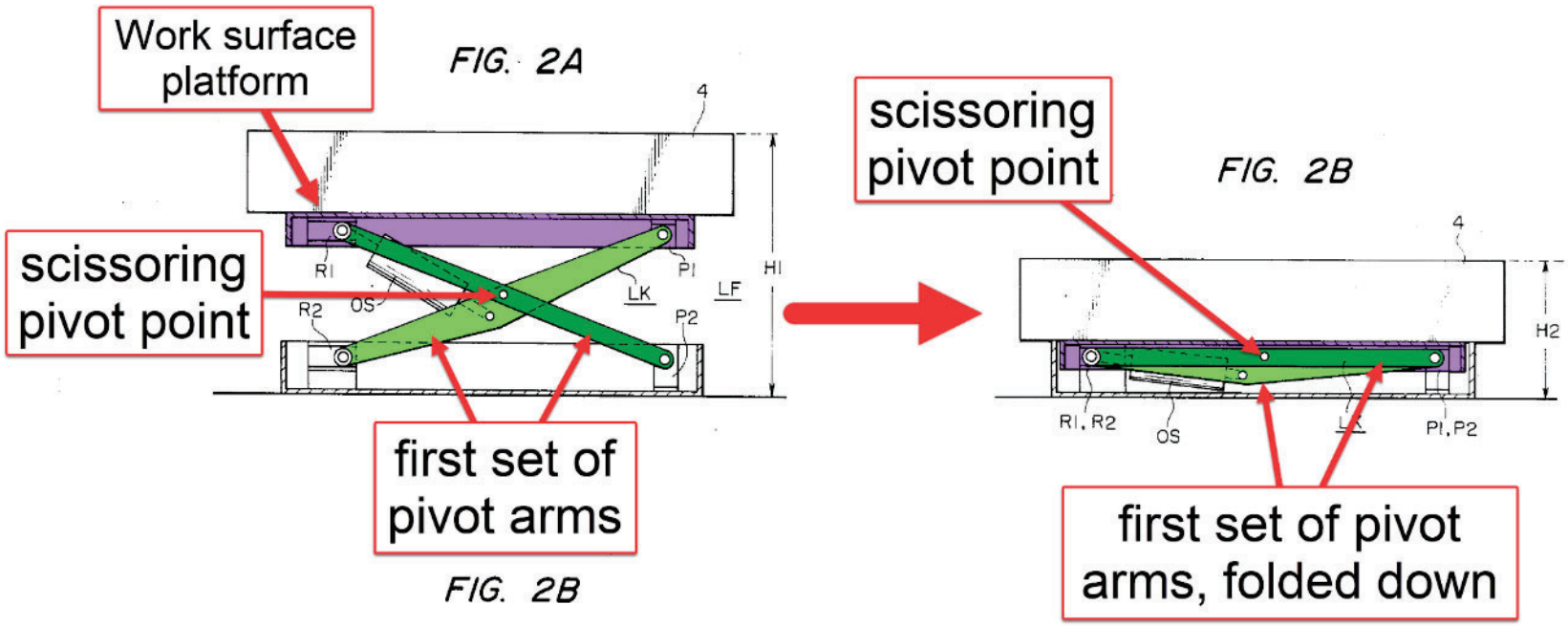

[214]

"FIG. 2 illustrates the arrangement of such a mechanism for producing vertical movement.
The height of the fluidized bed, and hence the height of the tank 4, are freely adjustable by a lifter LF between a maximum height H1 and a minimum height H2. The lifter LF includes a link mechanism LK having bearings P1 and P2 fixed to ends thereof and rollers R1 and R2 on opposite ends thereof which are movable along a guide rail." Yamamoto 1:63-2:3

[214] Yamamoto Figures 2A and 2B, combined and annotated

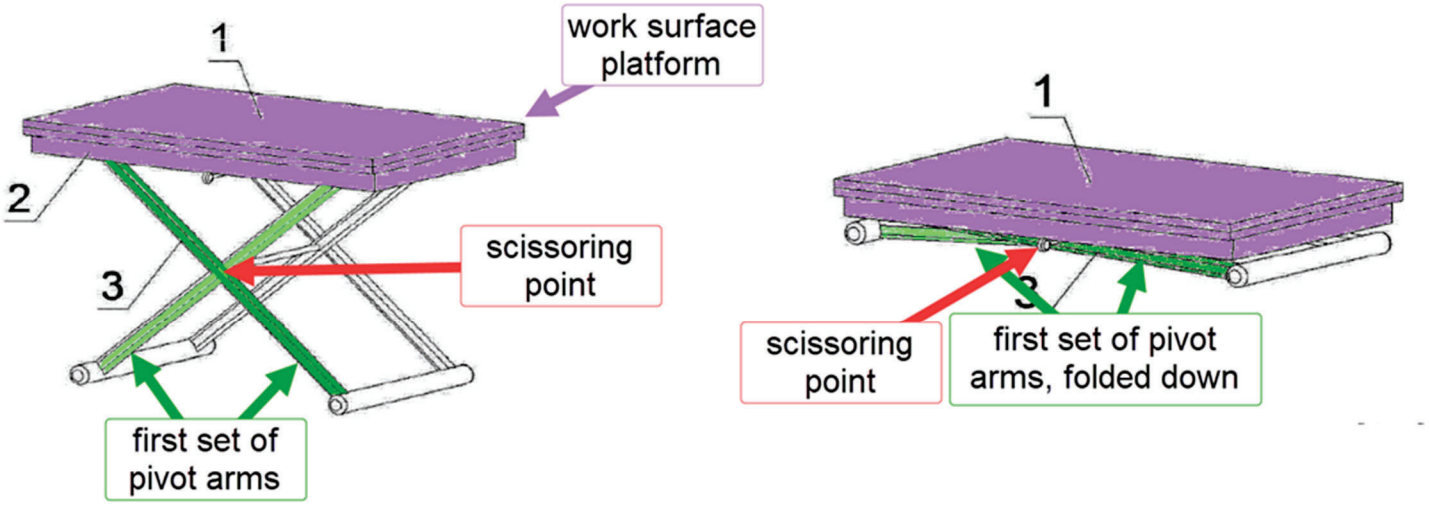

As shown above, Zhang discloses a first set of pivot arms, shown as item 3 above. These legs connect at a scissoring point. Together, these legs create a scissoring motion when raising and lowering the work surface to various heights. The figure on the left shows a raised position, and the figure on the right shows a lowered position.

"The platform (2) has not yet opened the upper ends of the "X" - shaped cross movable metal feet (3) to both sides to prevent the rapid lowering of the desktop (1), and the elastic buffering mechanism (7) is fixed in the middle of the platform (2), with the lower end facing ***the pivot shaft (30) in the middle of the "X" - shaped cross movable metal feet (3).*** *" Zhang [0005] emphasis added*

As shown in the citations above, the Zhang mechanism has a first set of pivot arms that connect at a scissoring point. These leg members form a scissor mechanism that adjusts the work surface platform to various heights.

A POSITA would understand that scissor mechanisms are suitable for vertical lifting applications such as Yamamoto and Zhang. Scissor mechanisms are well-known and are very commonly built with two sets of pivots arms.

4a1. a second set of pivot arms; and	**YES:** Yamamoto in view of Zhang discloses a second set of pivot arms.

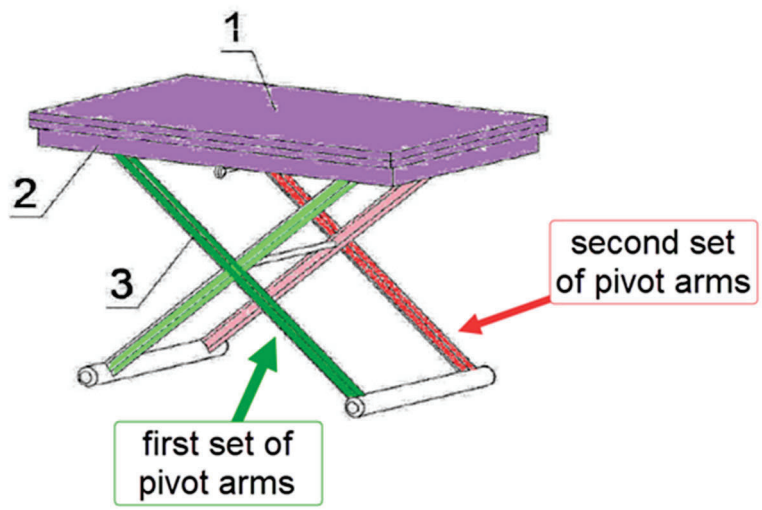

As shown in the figure above, Zhang discloses a second set of pivot arms. He references one set as an "X-shaped movable foot", and when referencing two sets he uses the term "X-shaped movable feet." See description below:

"The positive effect of this utility model is that the height adjustable table using this structure can control the opening angle of the "X" - shaped cross movable metal feet through the joint action of horizontal guide rails, air support rods, pull switches and other components to adjust the height of the desktop and perform height positioning, making it very convenient to adjust the desktop height." Zhang [0009]

As shown above Zhang has a first and a second set of pivot arms. They are connected to each other and move in a scissor-like fashion. A POSITA will understand that this is a scissor lift mechanism of typical and ordinary design. A POSITA will further understand and be familiar with the fact that scissor lift mechanisms such as a common scissor lift machine or even this small table as disclosed by Zhang are commonly built with a pair of scissoring links. This provides lateral stability to the machine over what would be typical of a single set of scissoring links. Thus, as discussed here and previously, Yamamoto in view of Zhang will also have a first and a second set of pivot arms.

4a2. an element that connects the first set of pivot arms to the second set of pivot arms.	**YES:** Yamamoto in view of Zhang discloses an element that connects the first set of pivot arms to the second set of pivot arms.

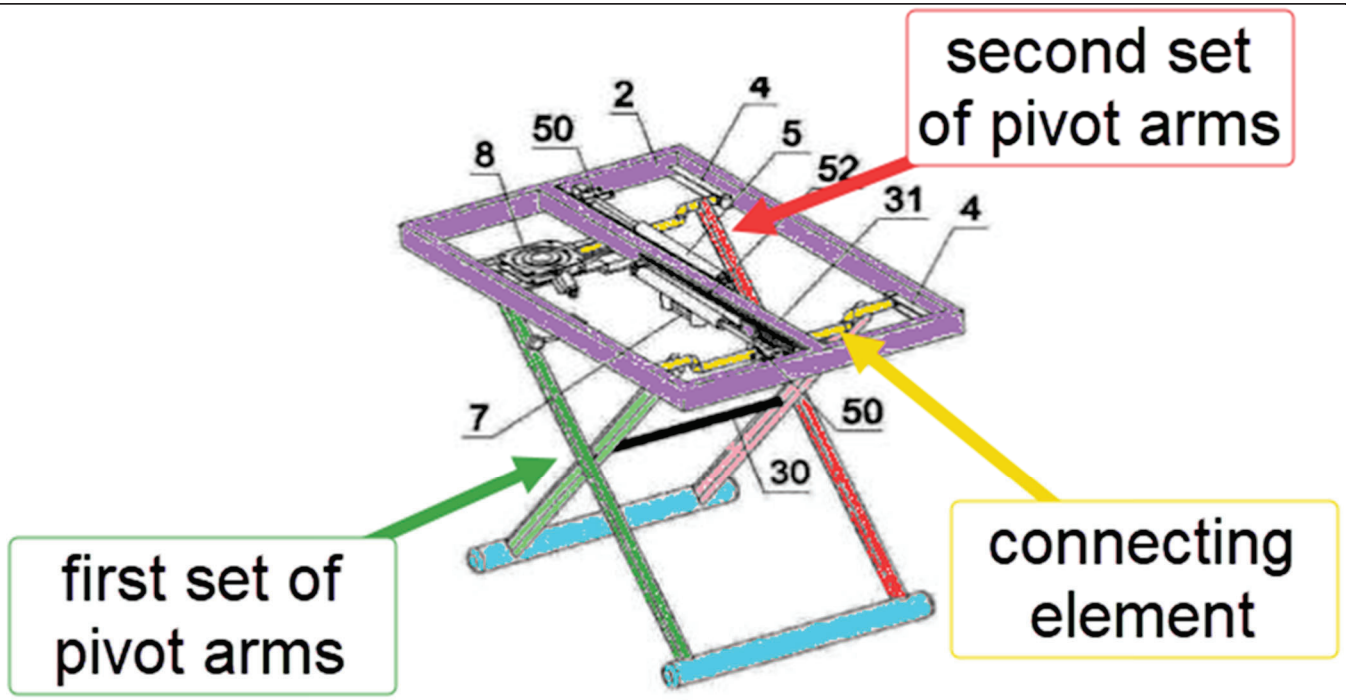

"The platform (2) has not yet opened the upper ends of the "X" - shaped cross movable metal feet (3) to both sides to prevent the rapid lowering of the desktop (1), and the elastic buffering mechanism (7) is fixed in the middle of the platform (2), with the lower end facing ***the pivot shaft (30) in the middle of the "X" - shaped cross movable metal feet (3).****" Zhang [0005] (emphasis added)*

As shown above, Zhang discloses multiple elements that connect the first set of pivot arms to the second set of pivot arms. For example, pivot shaft 30 connects the first and second set of pivot arms to each other. Further the figures of Zhang show cross members at the top (highlighted in yellow) which connect the first and second sets of pivot arms together. Further still, the cross members that form the base of the Zhang mechanism also connect the first and second set of pivot arms together. A POSITA will understand that this is typical and ordinary design for scissor lift mechanisms and any one of these components are elements that connect the first set of pivot arms to the second set of pivot arms. A POSITA would be motivated to include connecting elements as part of the scissoring mechanism as these elements provide lateral stability to the assembly.

5P. The desktop workspace of claim 1,	**YES:** As shown above, Yamamoto in view of Zhang, and in further view of HJ Zottel discloses the desktop workspace of claim 1.

5a. wherein the work surface platform forms an upper work surface, and	**YES:** Both Zhang and Yamamoto disclose that the work surface platform forms an upper work surface.

Yamamoto discloses a work surface platform as shown below:

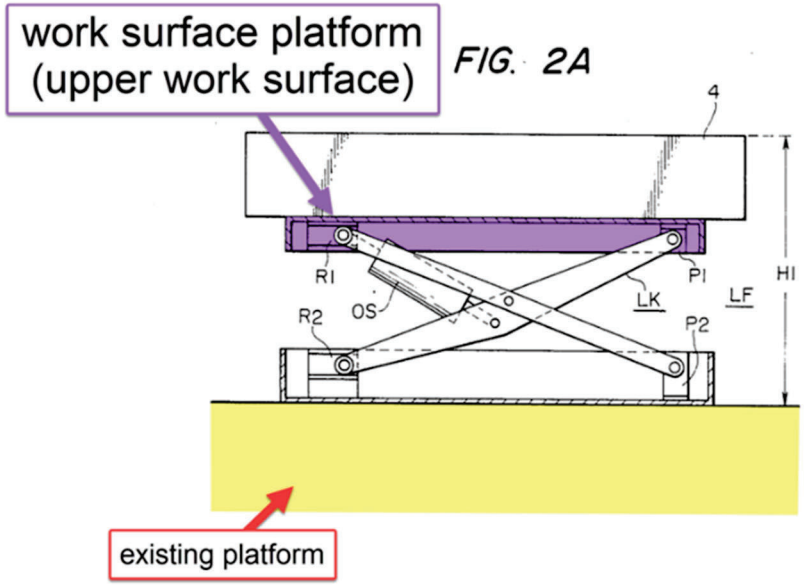

"The conventional fluidized bed has a fixed height. However, there has been a demand for a fluidized bed having an adjustable height, specifically, one in which the height of the bed above the floor can be made as small as possible for ease in transferring a patient onto the bed or when a patient gets onto or off the bed, and placed at a suitable height when the patient is lying on the bed for administering treatment to the patient." Yamamoto 1:53-60

As shown above Yamamoto is a table which has a work surface platform (i.e. the table top). Further, there is an existing platform that Yamamoto is set on. Like essentially ALL tables, the work surface platform is positioned above the floor, and is therefore "upper." This is the basic form and function of a table in the first place.

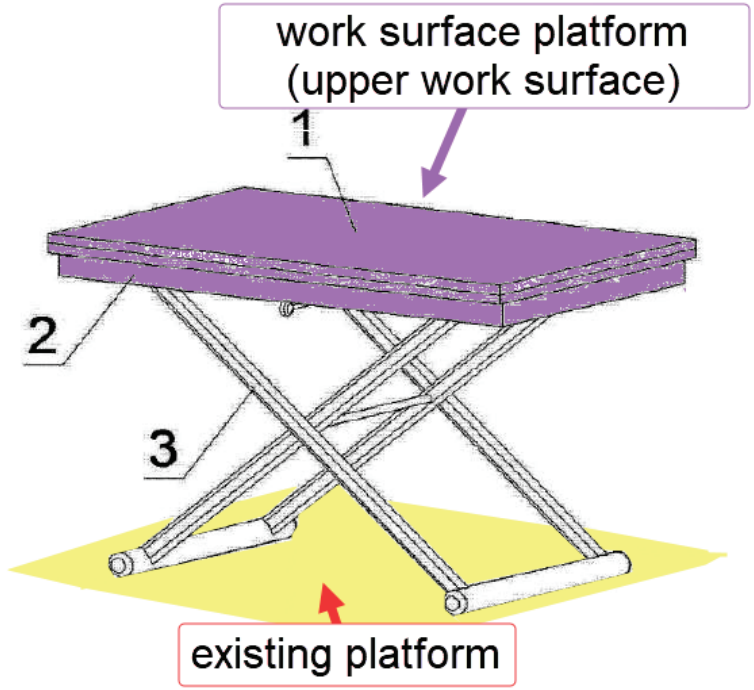

As shown above Zhang is a table which has a work surface platform (i.e. the table top). Further, there is an existing platform that Zhang is set on. Like essentially ALL tables, the work surface platform is positioned above the floor, and is therefore "upper." This is the basic form and function of a table in the first place.

"The purpose of the present utility model is achieved as follows: a height-adjustable table, comprising a tabletop (1), a stand (2), and an "X" - shaped cross movable metal foot (3)." Zhang [0004]

Thus, both Yamamoto and Zhang demonstrate that their respective work surface platforms form upper work surfaces.

5b. wherein the gas spring is completely covered by a profile of the work surface platform when viewed from above the upper work surface relative to the base, the profile of the work surface platform being defined by an outer perimeter of the upper work surface.	**YES:** Both Yamamoto and Zhang disclose that the gas spring (or piston cylinder device) is completely covered by a profile of the work surface platform when viewed from above the work surface relative to the base, the profile of the work surface platform being defined by an outer perimeter of the upper work surface.

Yamamoto discloses the same limitation. As discussed previously, Yamamoto uses a hydraulic cylinder which is another type of piston cylinder actuator. However, as discussed previously, a POSITA would understand that from a design point of view, a gas spring can be installed in place of a hydraulic cylinder. The two devices are different in their behavior and certain applications may show that one is favorable over the other. Nevertheless, both a gas spring and a hydraulic cylinder a piston-cylinder devices and both can exert outward forces by extending under pressure. Thus, supposing that the hydraulic cylinder of Yamamoto was to be replaced with a gas spring to assist in the lift of an otherwise manually lifted

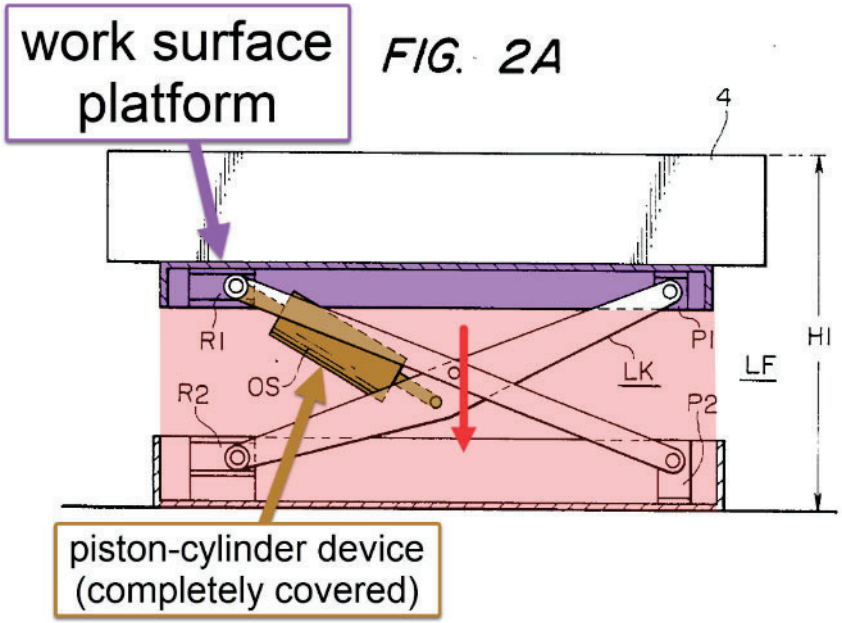

table, such a substitution would be arranged such that the gas spring is completely covered by a profile of the work surface platform when viewed from above.

"The conventional fluidized bed has a fixed height. However, there has been a demand for a fluidized bed having an adjustable height, specifically, one in which the height of the bed above the floor can be made as small as possible for ease in transferring a patient onto the bed or when a patient gets onto or off the bed, and placed at a suitable height when the patient is lying on the bed for administering treatment to the patient." Yamamoto 1:53-60

"The lifter LF includes a link mechanism LK having bearings P1 and P2 fixed to ends thereof and rollers R1 and R2 on opposite ends thereof which are movable along a guide rail. A hydraulic cylinder OS serves as a vertical drive unit for extending and retracting the link mechanism LK." Yamamoto 1:68-2:5

As shown above, Yamamoto has a hydraulic cylinder OS which is completely covered by the profile of the work surface platform when viewed from above. As discussed, a POSITA would understand that the hydraulic cylinder could be replaced by a gas spring, in which case, it would also be completely covered by the profile of the work surface platform when viewed from above.

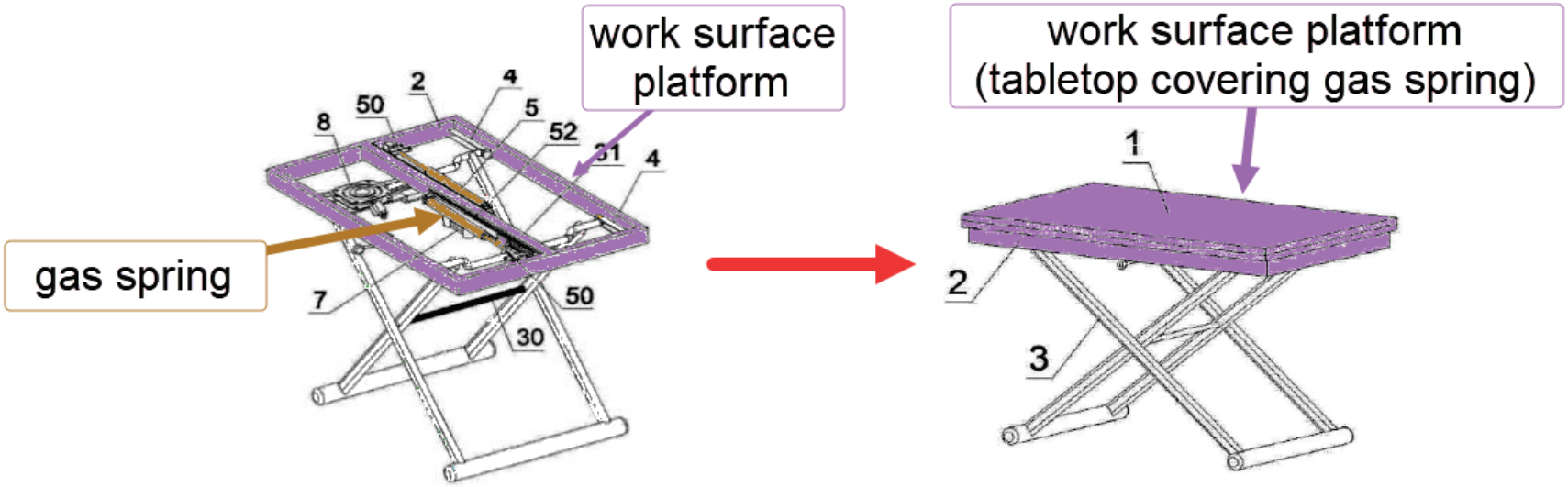

As shown above and as discussed previously, Zhang discloses an upper work surface and a gas spring. Further, the tabletop portion of the work surface platform is placed above and is larger than the work surface platform frame, to which the gas springs are mounted. This tabletop portion of the work surface platform completely covers the gas springs below it.

6P. The desktop workspace of claim 1,	**YES:** As shown above, Yamamoto in view of Zhang, and in further view of HJ Zottel discloses the desktop workspace of claim 1.
6a. wherein the gas spring is a first spring,	**YES:** Zhang discloses a gas spring that is a first spring.

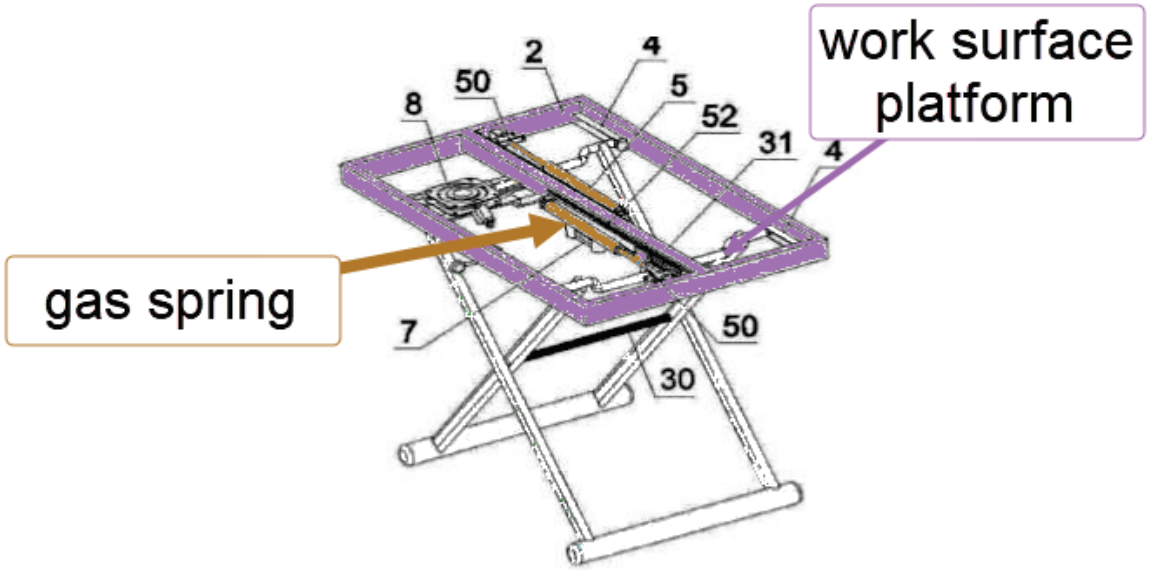

"The two upper ends of the "X" - shaped cross movable metal feet (3) are connected to the platform (2) ***<u>There are also air support rods (5) connected between the two ends</u>****, where the movable rod end (50) of the air support rod (5) is rotatably connected to the upper end of the "X" - shaped cross movable metal foot (3), and the fixed end (51) of the air support rod (5) is connected to the sliding rod of the slide rail (52). The two air support rods (5) are controlled by a pull switch (6) to extend and retract the movable rod of the air support rod (5)." Zhang [0004] emphasis added*

As shown above, Zhang discloses a gas spring that is a first spring. The term used for a gas spring in Zhang is "air support rod." Because this is a translation from Mandarin to English, the terminology may be a bit unorthodox, but the description and figures clearly show a gas spring

6b. the desktop workspace comprising a pair of springs attached to the height adjustment mechanism to assist in the elevation of the work surface platform, the pair of springs including the first spring and a second spring.	**YES:** Yamamoto in view of Zhang discloses a the desktop workspace comprising a pair of springs attached to the height adjustment mechanism to assist in the elevation of the work surface platform, the pair of springs including the first spring and a second spring.

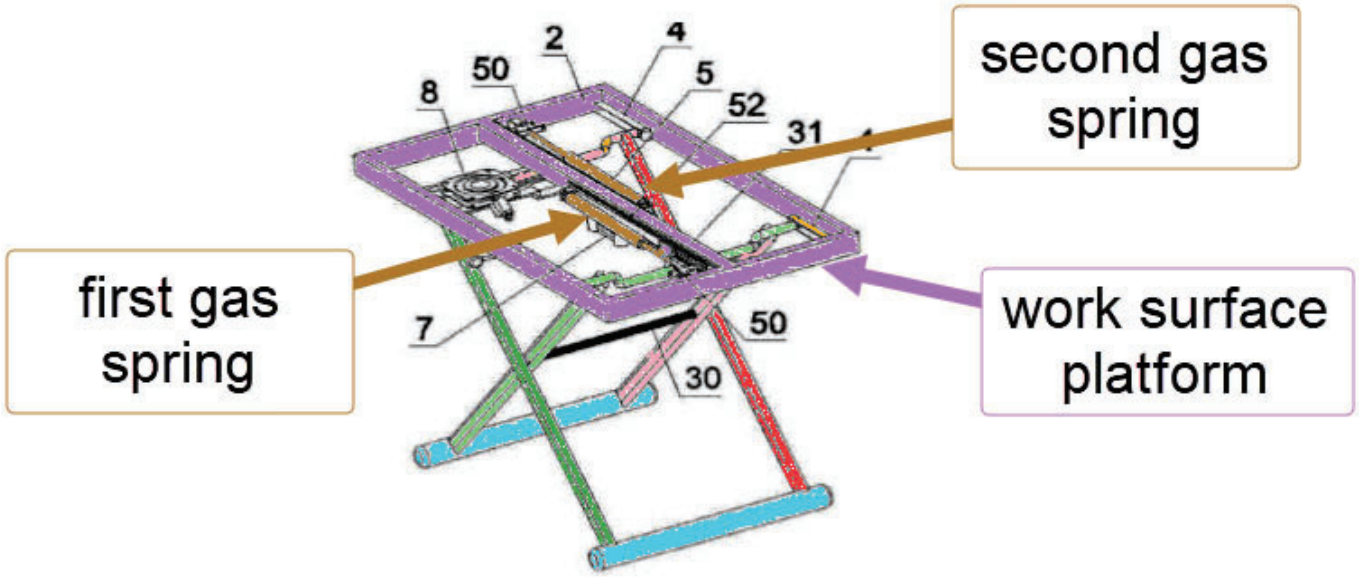

"The two upper ends of the "X" - shaped cross movable metal feet (3) are connected to the platform (2) ***<u>There are also air support rods (5) connected between the two ends</u>****, where the movable rod end (50) of the air support rod (5) is rotatably connected to the upper end of the "X" - shaped cross movable metal foot (3), and the fixed end (51) of the air support rod (5) is connected to the sliding rod of the slide rail (52). The two air support rods (5) are controlled by a pull switch (6) to extend and retract the movable rod of the air support rod (5)." Zhang [0004] emphasis added*

Zhang discloses the use of a pair of gas springs to facilitate the movement of the scissor linkage style platform. The gas springs are locking gas springs and are tied together through the use of Bowden cables in a manner well known and in accordance with typical engineering practice. These gas springs are attached to the "X-shaped cross movable feet", which comprise the height adjustment mechanism.

"The two air struts are controlled by a pull switch 6." Zhang, Abstract

"The positive effect of this utility model is that the height adjustable table using this structure can control the opening angle of the "X" – shaped cross movable metal feet through the joint action of horizontal guide rails, air support rods, pull switches and other components to adjust the height of the desktop and perform height positioning, making it very convenient to adjust the desktop height." Zhang [0009]

As shown above, Zhang discloses the use of a pair of locking gas springs to adjustably set the height of a desktop work surface. As discussed previously, a POSITA would be motivated to use the pair of locking gas springs as taught by Zhang. This would allow for greater assistance in the lift of the work surface platform without compromising how compact the system is capable of being for storage. Thus, the combination of the Yamamoto in view of Zhang will also have a pair of gas springs.

7. The desktop workspace of claim 1,	**YES:** As shown above, Yamamoto in view of Zhang, and in further view of HJ Zottel discloses the desktop workspace of claim 1.
7a. wherein the sliding mechanism is a first sliding mechanism, **7b.** the desktop workspace further comprising a second sliding mechanism,	**YES:** Yamamoto in view of Zhang discloses that the sliding mechanism is a first sliding mechanism. Further this combination discloses that there is a second sliding mechanism.

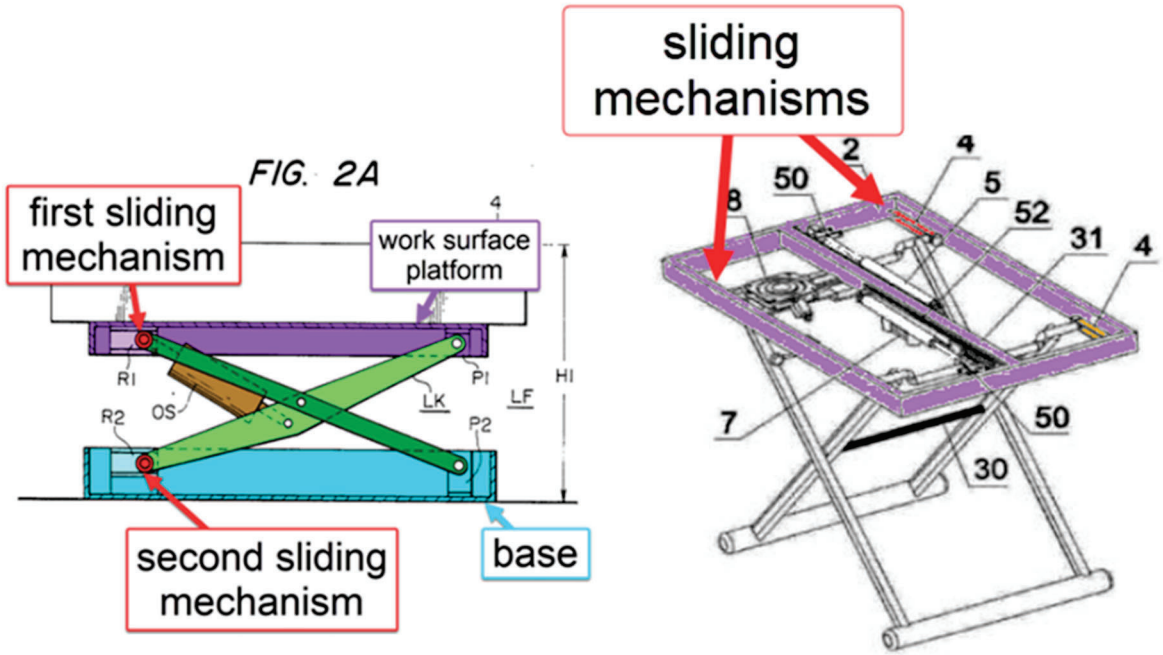

"a set of horizontal guide rails (4) are respectively provided at both ends of the stand (2), and the left and right upper ends of the "X" – shaped cross movable metal foot (3) are respectively placed in the horizontal position so as to slide left and right. Inside the guide rail (4)" Zhang [0004]

"The lifter LF includes a link mechanism LK having bearing P1 and P2 fixed to ends thereof and rollers R1 and R2 on opposite ends thereof which are movable along a guide rail" Yamamoto 1:68-2:3

As shown above, both Zhang and Yamamoto have a first sliding mechanism, which is what allows the top portion of the scissor links to translate relative to the work surface platform. In addition to this, Yamamoto discloses a second sliding mechanism that is operable between the pivot arms and the base. Again, this is typical scissor linkage design that any POSITA would readily understand is ubiquitous.

7c. wherein either the first sliding mechanism or the second sliding mechanism is attached or slides along the work surface platform, **7d.** and the other of the first sliding mechanism and the second sliding mechanism is attached to or slides along the base.	**YES:** Yamamoto in view of Zhang discloses that either the first or the second sliding mechanism is attached or slides along the work surface platform. Further, the other first and second sliding mechanism is attached to or slides along the base.

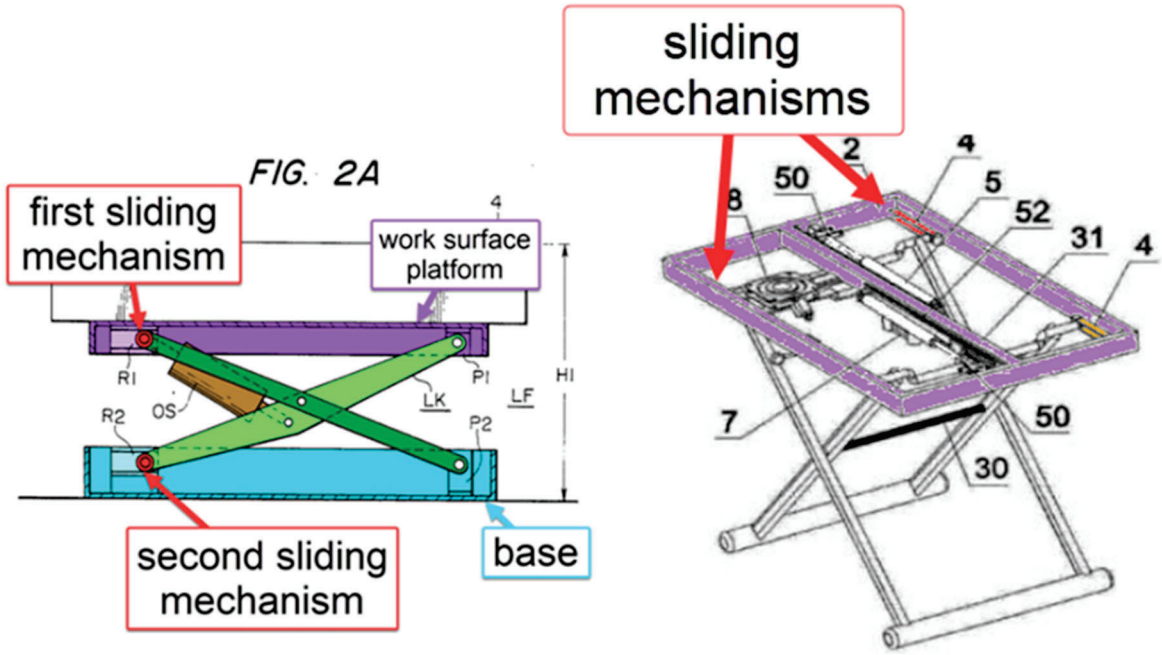

"a set of horizontal guide rails (4) are respectively provided at both ends of the stand (2), and the left and right upper ends of the "X" – shaped cross movable metal foot (3) are respectively placed in the horizontal position so as to slide left and right. Inside the guide rail (4)" Zhang [0004] *"The lifter LF includes a link mechanism LK having bearing P1 and P2 fixed to ends thereof and rollers R1 and R2 on opposite ends thereof which are movable along a guide rail" Yamamoto 1:68-2:3* As shown above, both Yamamoto and Zhang show that the first sliding mechanism(s) are attached to or slide along the work surface platform. Further, Yamamoto has a second sliding mechanism (item R2 as shown above) that is attached to or slides along the base.	
8P. The desktop workspace of claim 1,	**YES:** As shown above, Yamamoto in view of Zhang, and in further view of HJ Zottel discloses the desktop workspace of claim 1.
8a. wherein the scissoring motion when raising and lowering the work surface platform to various heights of the height adjustment mechanism moves the work surface platform in a straight vertical direction relative to the base.	**YES:** Yamamoto discloses that the scissoring motion when raising and lowering the work surface platform to various heights of the height adjustment mechanism moves the work surface platform in a straight vertical line relative to the base.

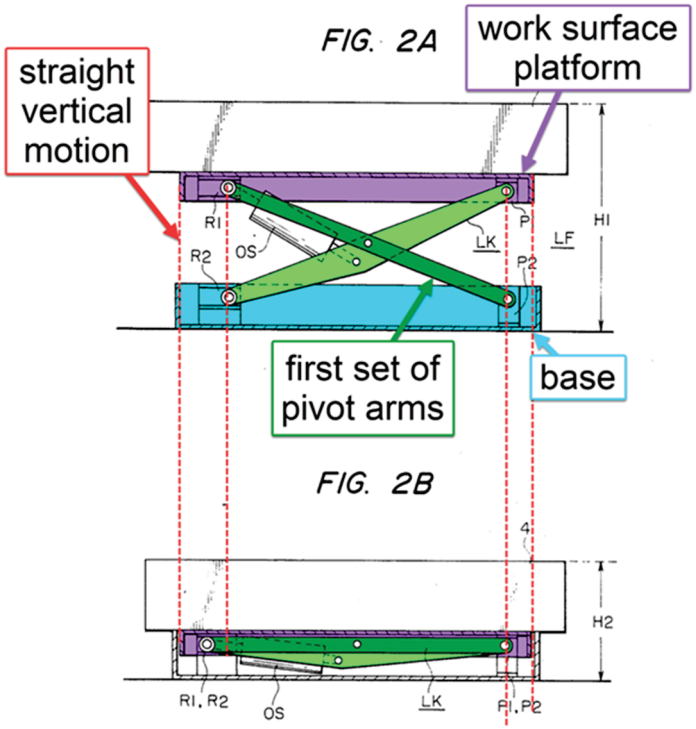

"To meet this demand, it has been proposed to combine a lifter with the bed for adjusting the height of the bed. FIG. 2 illustrates the arrangement of such a mechanism for producing vertical movement. The height of the fluidized bed, and hence the height of the tank 4, are freely adjustable by a lifter LF between a maximum height H1 and a minimum height H2. The lifter LF includes a link mechanism LK having bearings P1 and P2 fixed to the ends thereof and rollers R1 and R2 on opposite ends thereof which are movable along a guide rail. A hydraulic cylinder OS serves as a vertical drive unit for extending and retracting the link mechanism LK. Vertical movement of such a vertically movable fluidized bed with a patient thereon while the beads 5 are in a flowing condition, however, results in the danger of causing the patient to move unnecessarily on the bed." Yamamoto 1:61-2:9

As shown above, the scissor mechanism of Yamamoto moves the work surface platform in a straight vertical line relative to the base. This is a property typical of scissor lifting mechanisms generally as a POSITA would understand.

9P. The desktop workspace of claim 1,	**YES:** As shown above, Yamamoto in view of Zhang, and in further view of HJ Zottel discloses the desktop workspace of claim 1.

9a. wherein the slidable tray protrudes out, down, and parallel to the work surface platform in the extended position.	**YES:** This combination shows that the slidable tray protrudes out, down, and parallel to the work surface platform in the extended position.

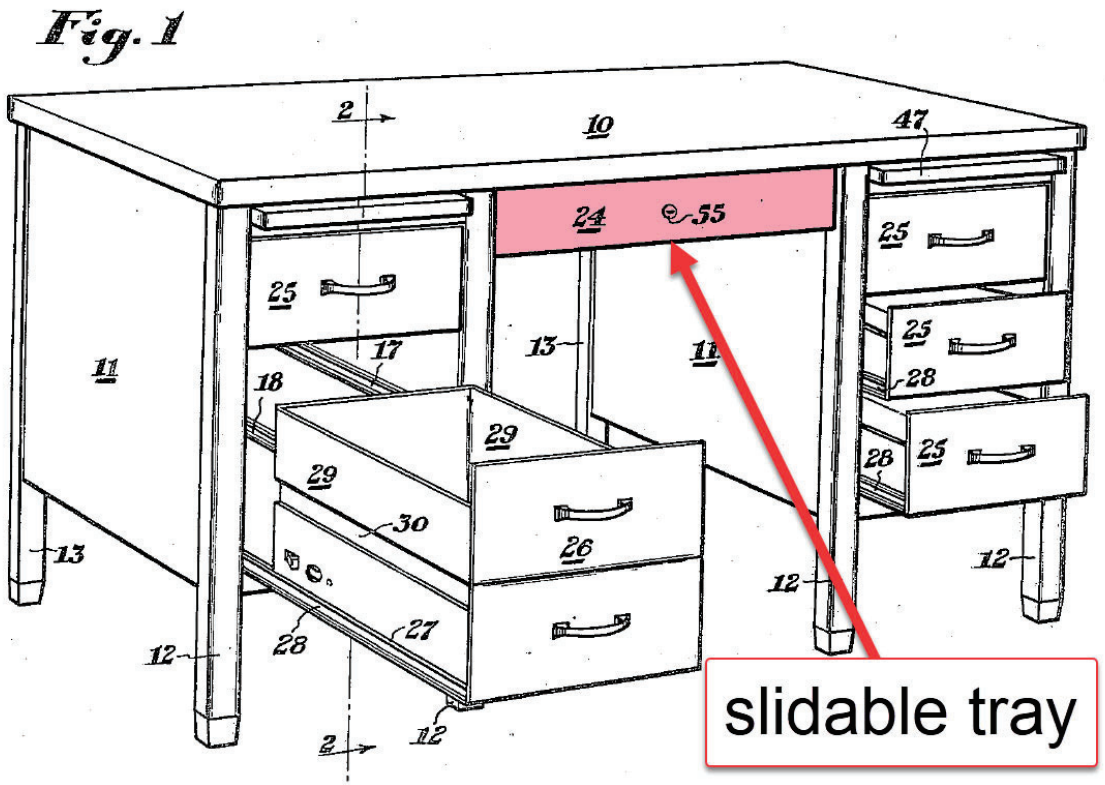

"The primary objects of the instant invention are to provide a desk having a plurality of box drawers and one or more vertical letter file drawers…" HJ Zottel 1:4-6

"The desk comprises a top 10 supported by drawer supporting pedestals 11 having front legs 12 and rear legs 13 attached thereto" HJ Zottel 1:47-50

"As best shown in Figure 1, the desk is provided with a center drawer 24 between the pedestals 11" HJ Zottel 2:9-11

HJ Zottel shows a slidable tray (drawer 24) which is one of an array of drawers that are integrated with the desk disclosed by HJ Zottel. The drawers of Figure 1 are shown in various state of being opened. Some of them are shown in a closed position, such as central drawer 24 and some

of drawers 25. Others are shown in a partially open state such as two of the drawers 25 shown above. Still others such as drawer 26 is shown in a fully open state. Cumulatively, it is clear that the drawers are arranged in a parallel manner to the work surface platform (as demonstrated by the various states shown of open vs. closed drawers). At the same time all of the drawers are arranged strictly below the work surface platform. When any given drawer is pulledo out, it will translate to a position that is protrusionally outward away from the work surface platform, as drawer 26 is shown in Figure 1. Thus, when central drawer 24 is in the extended or open position, it will protrude out, down, and parallel to the work surface platform.	
10P. The desktop workspace of claim 1,	**YES:** As shown above, Yamamoto in view of Zhang, and in further view of HJ Zottel discloses the desktop workspace of claim 1.
10a. wherein the gas spring is attached directly to the one of the set of pivot arms.	**YES:** Yamamoto in view of Zhang discloses that the gas spring is attached directly to one of the set of pivot arms.

FIG. 2A

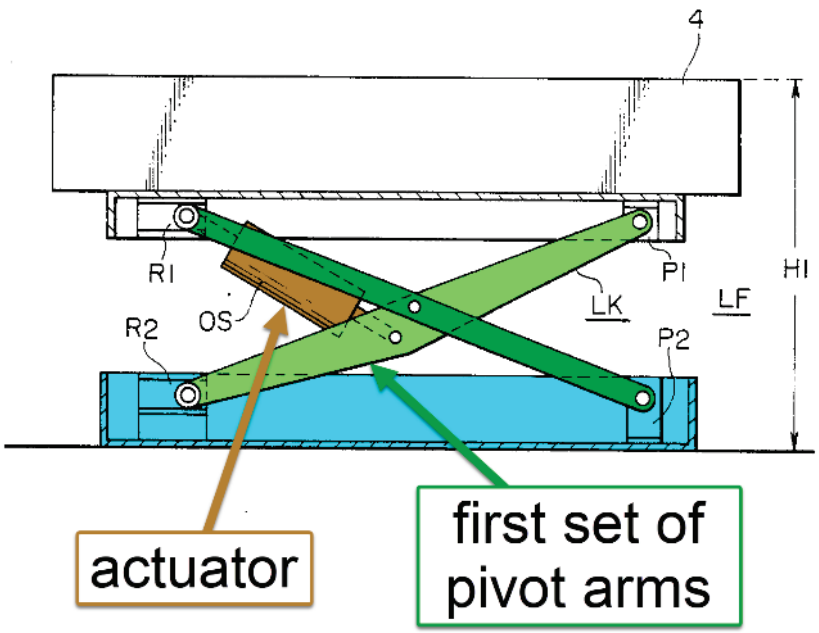

"A hydraulic cylinder OS serves as a vertical drive unit for extending and retracting the link mechanism LK." Yamamoto 2:3-5

As shown above, the cylinder of Yamamoto is attached to one of the first set of pivot arms. As discussed previously, a POSITA would be motivated to replace the hydraulic cylinder of Yamamoto with one or more locking gas springs as taught by Zhang. A POSITA would recognize that attaching the gas spring(s) to the pivot arms is one way to assist in the height adjustment of the scissor mechanism.	
12P. The desktop workspace of claim 1,	**YES:** As shown above, Yamamoto in view of Zhang, and in further view of HJ Zottel discloses the desktop workspace of claim 1.
12a. further comprising a height adjustment locking mechanism that holds the work surface platform at various vertical heights above the base.	**YES:** Yamamoto in view of Zhang discloses a height adjustment locking mechanism that holds the work surface platform at various vertical heights above the base.

FIG. 2A

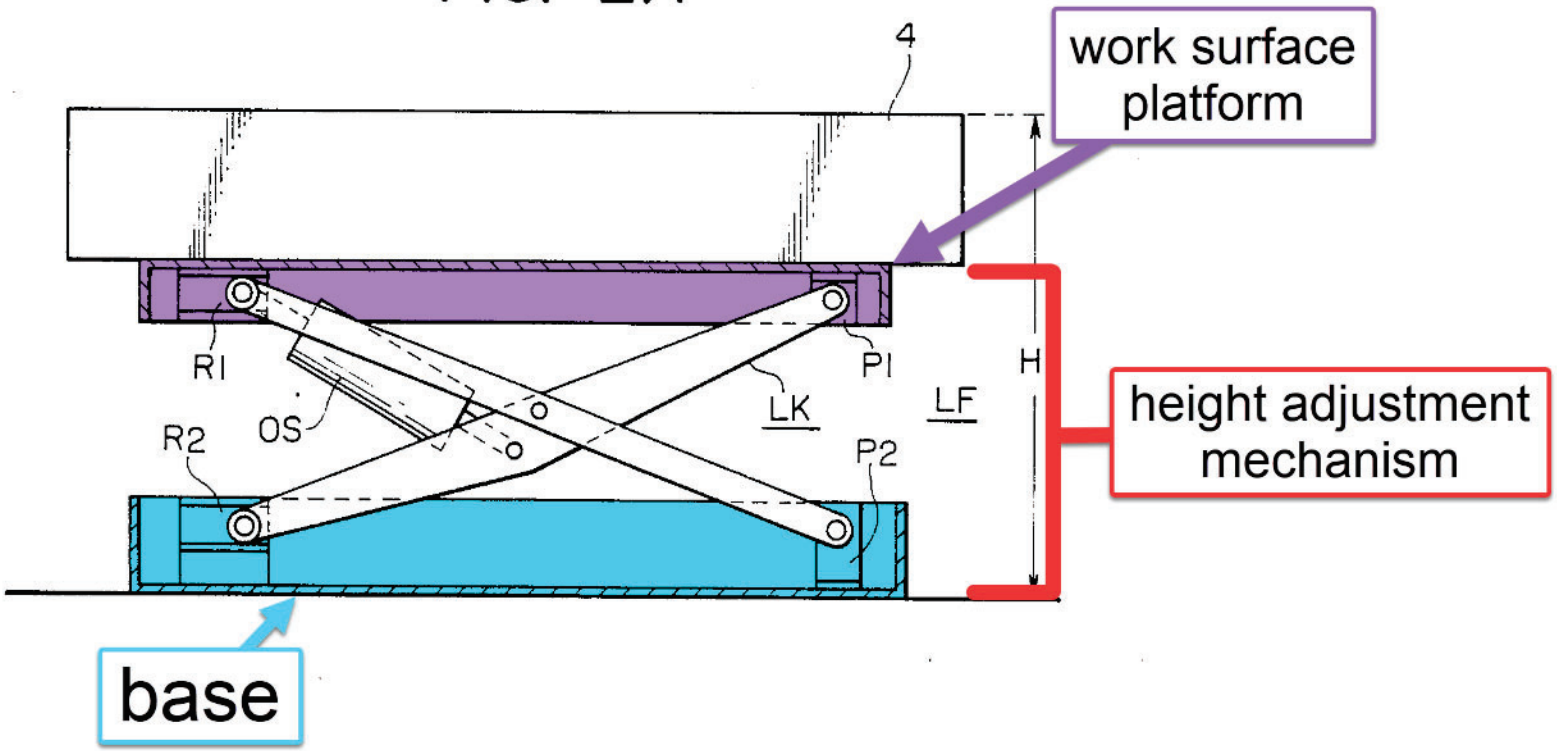

"FIG. 2 illustrates the arrangement of such a mechanism for producing vertical movement. The height of the fluidized bed, and hence the height of the tank 4, are freely adjustable by a lifter LF between a maximum height H1 and a minimum height H2. The lifter LF includes a link mechanism LK having bearings P1 and P2 fixed to ends thereof and rollers R1 and R2 on opposite ends thereof which are movable along a guide rail." Yamamoto 1:63-2:3

As shown above, Yamamoto discloses a height adjustment mechanism. A POSITA would be motivated to combine the gas springs of Zhang, as shown below, with the Yamamoto style height adjustment linkage. This would allow for height adjustment as well as a simpler method for locking via the use of the Zhang gas springs.

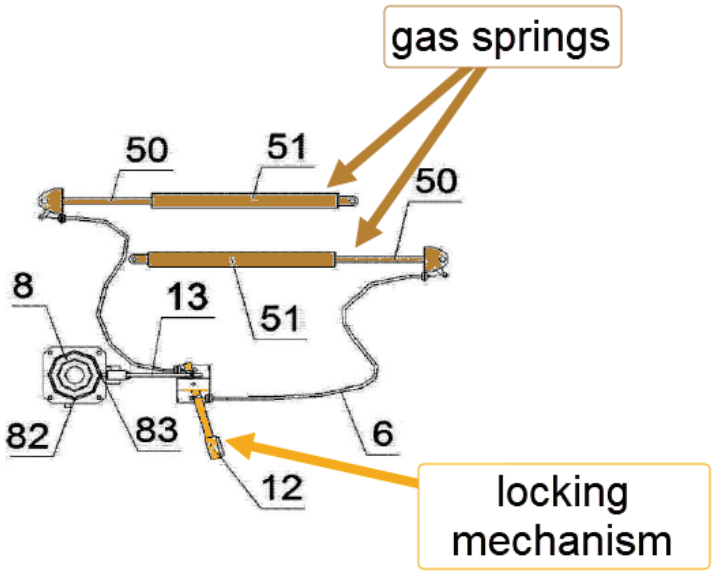

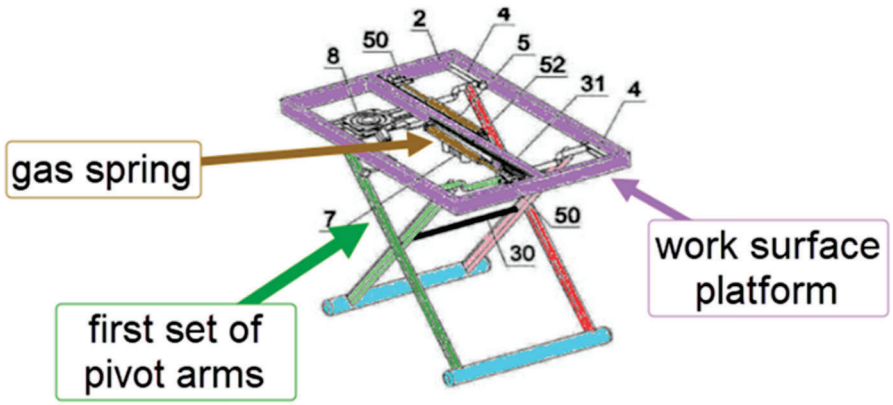

"On one side of the platform (2), there is a swing rod (12) that drives the action of the cable switch (6). The middle of the swing rod (12) is fixed to a fixed frame (12) through a rotating shaft (11). The cable drive end of the cable switch (6) is connected to one end of the swing rod (12). When the swing rod (12) swings, the valve of the driving air rod (5) is opened, and the movable rod end (50) is in a telescopic state; When the swing rod (12) is in a nonstressed state, the valve of the driving air rod (5) is closed, and the movable rod is in a positioning state" Zhang [0007]

As shown above, Zhang discloses the use of a gas spring to facilitate the movement of the scissor linkage and provide means to lock its position.

14P. The desktop workspace of claim 1,	**YES:** As shown above, Yamamoto in view of Zhang, and in further view of HJ Zottel discloses the desktop workspace of claim 1.

14a. further comprising two sliders that connect the slidable tray to the work surface platform,	**YES:** Yamamoto in view of Zhang, and in further view of HJ Zottel discloses two sliders that connect the slidable try to the work surface platform.

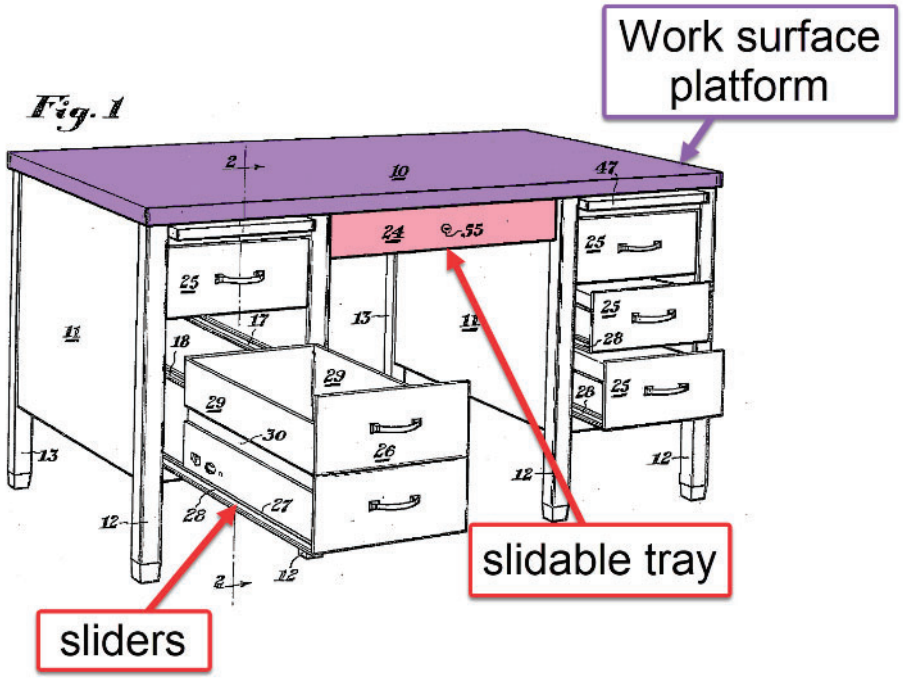

[215]

"As best shown in Figure 1, the desk is provided with a center drawer 24 between the pedestals 11" HJ Zottel 2:9-11

"The runners 28 of each drawer slidably engage a pair of drawer guides 16, 17 or 18 to thus slidably mount each drawer within a pedestal 11." HJ Zottel 2:17-20

As shown above, HJ Zottel discloses the use of two sliders that connect each drawer to the rest of the desk (i.e. runners 28). Specifically, HJ Zottel describes that each drawer slidably enages with a *pair* of guides as shown in the citation above. This is conistent with having a pair of sliders. Further, it is customary and typical to have a pair of sliders for a drawer (particularly if it is a side mount or top mount) as this provides for a more balanced drawer arrangment. As discussed previously, a POSITA will understand the ordinary permutations of drawer mounts, i.e. bottom mount, side, mount, and top mount. As discussed previously, when combining the teachings of HJ Zottel with the combination of Yamamoto in view of

[215] HJ Zottel, Figure 1, annotated

Zhang, a POSITA would be motivated to use a top-mount drawer as that is the only structure available to mount a drawer to in this combination. Thus, a POSITA would be motivated to use sliders to connect the slidable tray to the work surface platform.

In addition to this, a POSITA may also consider other well-known teachings in the prior art such as that of Drabczyk which shows the use of two sliders that connect the slidable tray to the work surface platform as shown below:

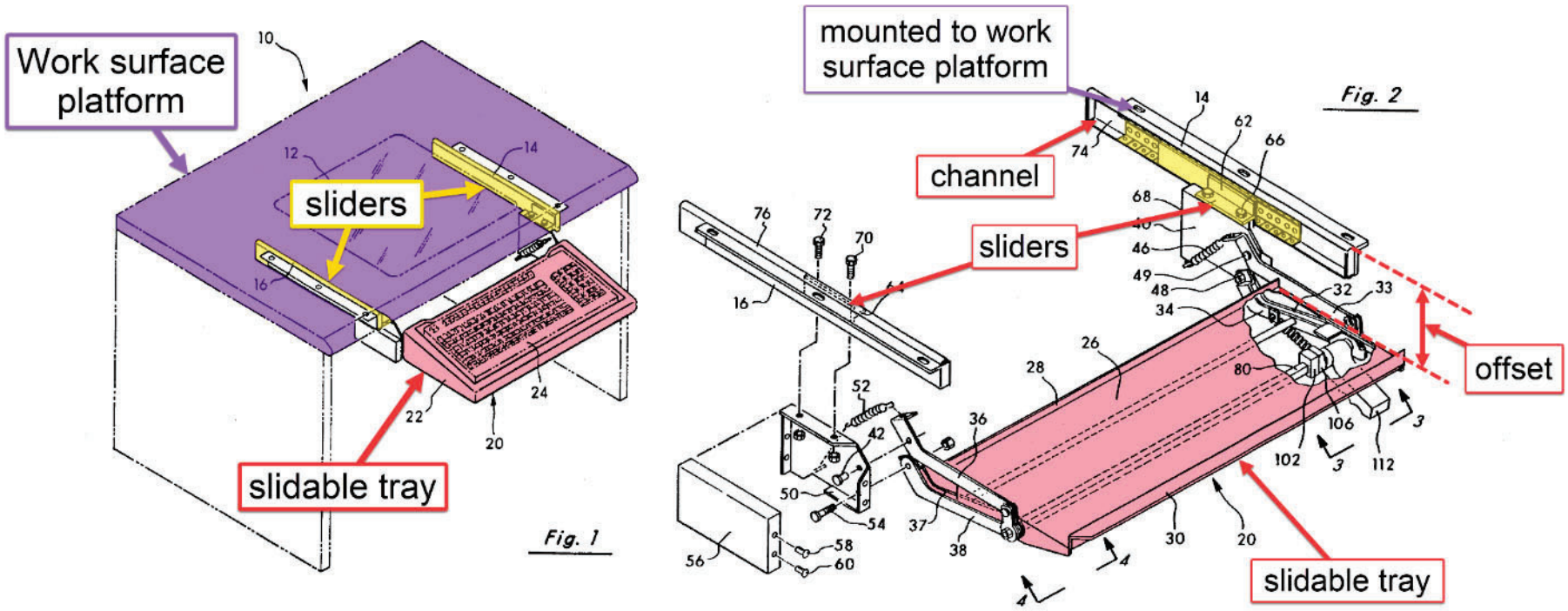

216

"Keyboard holder 20 is secured to workstation 10 to slide from an out of the way position beneath the top of workstation 10 to a working position as shown in FIG. 1. Keyboard holder 20, shown in FIG. 1, includes a molded plastic tray 22, which holds most types and sizes of keyboards 24." Drabczyk 3:36-41

[216] Drabczyk Figures 1 and 2, combined and annotated

"Mounting plates 40, 42 are affixed to slide brackets 62, 64, respectively by bolts 66-72. Slide brackets 62, 64 slide within extendible tracks 74, 76 on mounting brackets 14, 16. ***<u>The design and operation of slide brackets 62, 64 and mounting brackets 14, 16 are conventional in design and are not discussed in any further detail.</u>*** *Thus, support tray 26, along with keyboard tray 22 and keybaord 24 are movable from an out of the way position beneath the upper surface of workstation 10 to a working position shown in FIG. 1." Drabczyk 3:65-4:6 (emphasis added)* As shown above Drabcyzk discloses the use of two sliders (slide brackets 62, 64) which connect the slidable tray (keyboard holder 20 and molded plastic tray 22) to the work surface platform, i.e. the desk top. With or without the dislosure of Drabczyk, a POSITA would be motivated to include a top-mounted drawer in the typical and traditional style (i.e. with a pair of sliders) when combining the teachings of HJ Zottel with Yamamoto in view of Zhang.	
14b. wherein the two sliders operate in parallel to facilitate selectively positioning the slidable tray between the stored position under the work surface platform and the extended position that is outward and lowered with respect to the work surface platform.	**YES:** Yamamoto in view of Zhang, and in further view of HJ Zottel discloses that the two sliders operate in parallel to facilitate selectively positioning the slidable tray between the stored position under the work surface platform and the extended position that is outward and lowered with respect to the work surface platform.

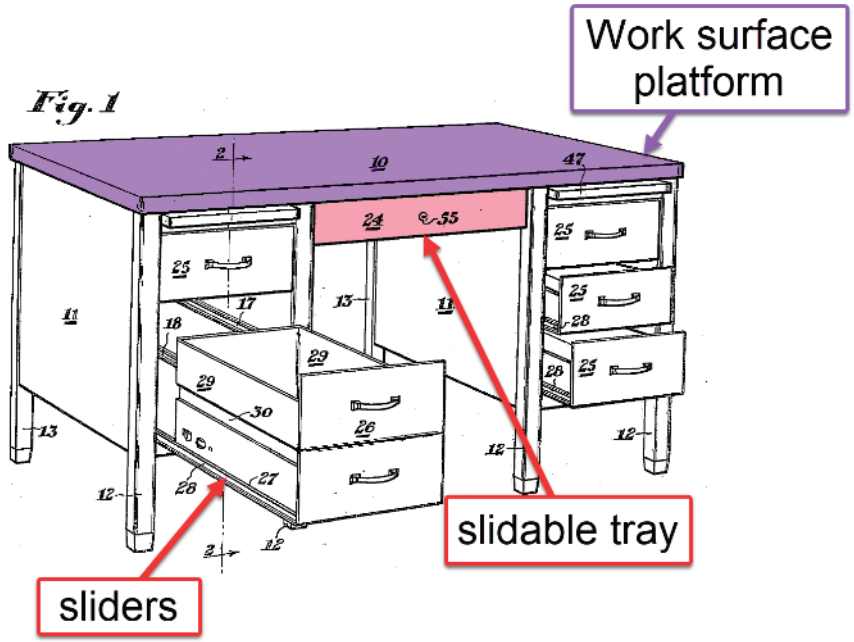

"As best shown in Figure 1, the desk is provided with a center drawer 24 between the pedestals 11" HJ Zottel 2:9-11

"The runners 28 of each drawer slidably engage a pair of drawer guides 16, 17 or 18 to thus slidably mount each drawer within a pedestal 11." HJ Zottel 2:17-20

As discussed previously, HJ Zottel discloses two sliders. Further, as is typical and customary, the two sliders operate in parallel. In fact, when the drawers of HJ Zottel are extended or retracted, each of the two sliders operate together. For example, each drawer of HJ Zottel can be placed in a stowed position (as drawer 24 is shown above) or in an opened position (such as drawer 26 shown above). Further as is typical of drawers in general, when extended the drawer is positioned outward and lowered with respect to the work surface platform.

Further still, a POSITA can look to prior art such as Drabczyk which also discloses the use of two sliders (as previously discussed) but also demonstrates that the sliders operate in parallel which facilitate positioning the tray in a stored position under the work surface or an extended position where it is spaced outward and lowered with respect to the work surface platform as shown below:

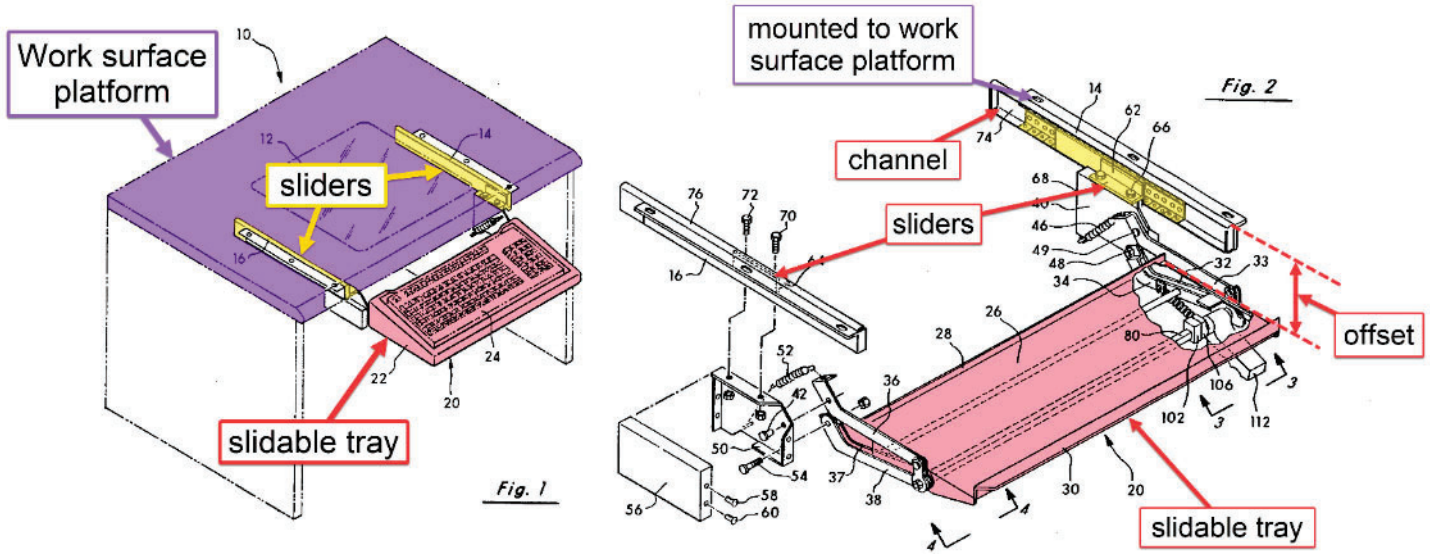

217

"Keyboard holder 20 is secured to workstation 10 to slide from an out of the way position beneath the top of workstation 10 to a working position as shown in FIG. 1. Keyboard holder 20, shown in FIG. 1, includes a molded plastic tray 22, which holds most types and sizes of keyboards 24." Drabczyk 3:36-41

"Mounting plates 40, 42 are affixed to slide brackets 62, 64, respectively by bolts 66-72. Slide brackets 62, 64 slide within extendible tracks 74, 76 on mounting brackets 14, 16. ***The design and operation of slide brackets 62, 64 and mounting brackets 14, 16 are conventional in design and are not discussed in any further detail.*** *Thus, support tray 26, along with keyboard tray 22 and keybaord 24 are movable from an out of the way position beneath the upper surface of workstation 10 to a working position shown in FIG. 1." Drabczyk 3:65-4:6 (emphasis added)*

As shown above, Drabczyk discloses the use of two sliders (slide brackets 62, 64) that operate in parallel that allow the keyboard to slide between an extended position as shown in Figure 1 above and a stowed position in accordance with traditional design.[218] In addition to this, as shown in Figure 1 of Drabczyk that shows that when in the extended position, the slidable tray is positioned outward and lowered with respect to the work surface platform.

[217] Drabczyk Figures 1 and 2, combined and annotated
[218] Drabczyk 3:65-4:6

15P. The desktop workspace of claim 1,	**YES:** As shown above Yamamoto in view of Zhang, and in further view of HJ Zottel discloses the desktop workspace of claim 1.
15a. wherein the one end of the gas spring is fixed relative to an underside of the work surface platform such that the one end of the gas spring acts on the underside of the work surface platform.	**YES:** Yamamoto in view of Zhang, and in further view of HJ Zottel discloses that one end of the gas spring is fixed relative to an underside of the work surface platform such that the one of the gas spring acts on the underside of the work surface platform.

FIG. 2A

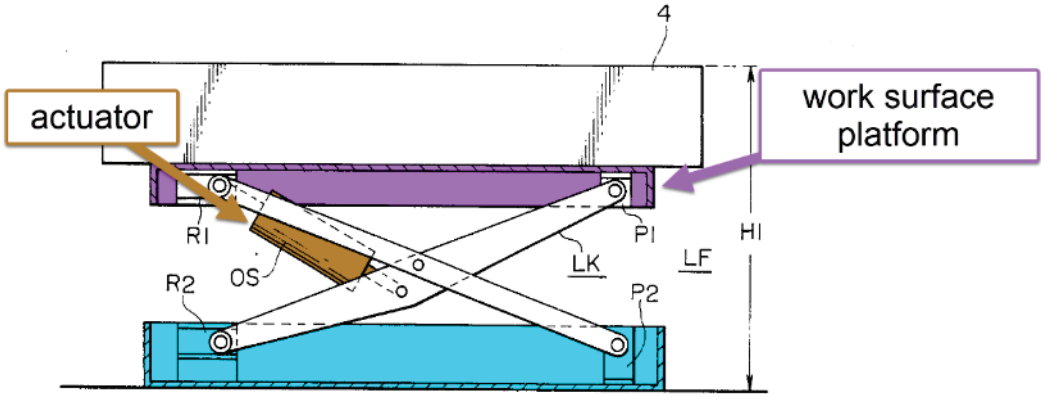

As shown above, the hydraulic cylinder in Yamamoto applies force to the underside of the work surface platform via its attachment to the sliding mechanism.

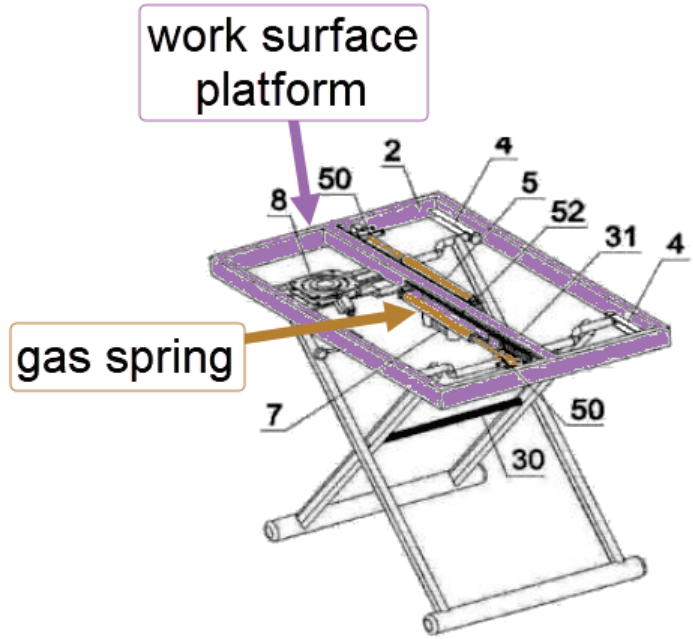

"On one side of the platform (2), there is a swing rod (12) that drives the action of the cable switch (6). The middle of the swing rod (12) is fixed to a fixed frame (12) through a rotating shaft (11). The cable drive end of the cable switch (6) is connected to one end of the swing rod (12). When the swing rod (12) swings, the valve of the driving air rod (5) is opened, and the movable rod end (50) is in a telescopic state; When the swing rod (12) is in a nonstressed state, the valve of the driving air rod (5) is closed, and the movable rod is in a positioning state." Zhang [0007]

As shown above, Zhang discloses the use of a gas spring to facilitate the movement of the scissor linkage. Specifically, the gas-spring cited is a locking gas-spring. A POSITA will understand that a hydraulic cylinder, such as used by Yamamoto is also a piston cylinder device that can be used to lock the vertical position of the platform at any height within its ordinary range of motion. As discussed previously, a POSITA would be motivated to combine the locking gas springs of Zhang with the linkage of Yamamoto. A POSITA would be motivated to connect the rod end of the locking gas spring directly to the underside of the work surface platform as this would greatly simplify the locking actuation method. If the rod end were mounted directly to the underside of the work surface platform, it would be stationary relative to the work surface platform and would allow the use of a simple locking handle rather than the use of Bowden cables as used in Zhang.

In addition to this, and as an example of this gas spring being mounted to the underside of the work surface platform, Lindahl—as discussed in this report—discloses a gas spring that is directly fixed to the underside of the work surface platform. Where both Yamamoto and Zhang use hydraulic

cylinders or gas springs to transfer load to the work surface platform via slide mechanisms, a POSITA would reasonably decide to simplify the mounting of the gas spring(s) by directly fixing them to the underside of the work surface platform, as is shown in Lindahl. Fixing directly to the work surface platform allowed Lindahl to use a simple lever as its gas spring locking mechanism, rather than hydraulics or Bowden cables. See below for the description of the gas spring used in Lindahl. *"An essential feature of the invention is that a blockable gas-spring 17, or piston-cylinder device is provided for enabling the position of the frame-like part 1 to be adjusted vertically in a smooth continuous fashion, both in an upward and in a downward direction. The gas-spring includes a bottom part 18 which is pivotally connected to the leg member 3 beneath the pivot rod 12, and an upper part 19 which is pivotally connected to the transverse frame-bar 15 on the same side of a vertical plane passing through the rod 12 as the lower part 18 (see also Figures 3, 4)." Lindahl 4:5-15* Thus, a POSITA would be motivated to use the linkage of Yamamoto, one or more gas springs of Zhang, and mount the spring(s) directly to the underside of the work surface platform with or without the teachings of Lindahl. In addition to this, a POSITA may further consider the teachings of Lindahl in order to eliminate the need for hydraulic lines or Bowden cables of Zhang, thereby simplifying the assembly.	
16P. The desktop workspace of claim 15,	**YES:** As shown above, Yamamoto in view of Zhang, and in further view of HJ Zottel discloses the desktop workspace of claim 15.
16a. wherein the one end of the gas spring is fixed to the work surface platform via a bracket mounted to the underside of the work surface platform.	**YES:** Zhang discloses that one end of the gas spring is fixed to the work surface platform via a bracket fixed to an underside of the work surface platform.

FIG. 2A

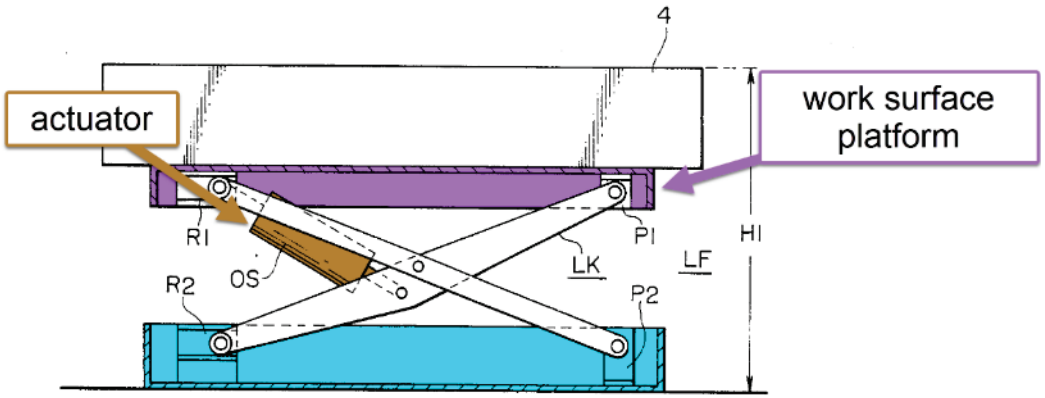

As shown above, the hydraulic cylinder in Yamamoto applies force to the underside of the work surface platform via its attachment to the sliding mechanism. As further shown above, Yamamoto discloses that the pivot arms are attached to the underside of the work surface platform via a bracket (item P1 above which is a pillow block bearing).

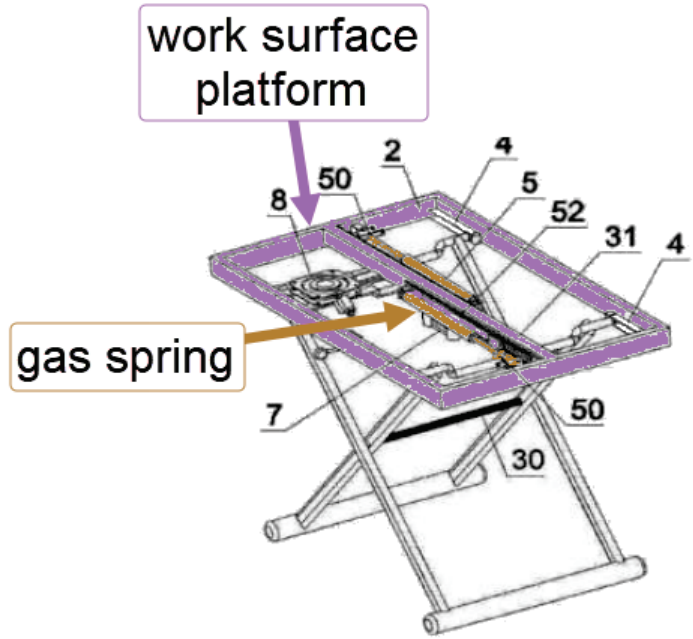

"On one side of the platform (2), there is a swing rod (12) that drives the action of the cable switch (6). The middle of the swing rod (12) is fixed to a fixed frame (12) through a rotating shaft (11). The cable drive end of the cable switch (6) is connected to one end of the swing rod (12). When the swing rod (12) swings, the valve of the driving air rod (5) is opened, and the movable rod end (50) is in a telescopic state; When the swing rod (12) is in a nonstressed state, the valve of the driving air rod (5) is closed, and the movable rod is in a positioning state." Zhang [0007]

As shown above, Zhang discloses the use of a gas spring to facilitate the movement of the scissor linkage. Specifically, the gas-spring cited is a locking gas-spring. A POSITA will understand that a hydraulic cylinder, such as used by Yamamoto is also a piston cylinder device that can be used to lock the vertical position of the platform at any height within its ordinary range of motion. As discussed previously, a POSITA would be motivated to combine the locking gas springs of Zhang with the linkage of Yamamoto. A POSITA would be motivated to connect the rod end of the locking gas spring directly to the underside of the work surface platform as this would greatly simplify the locking actuation method. Further, a POSITA would reasonably be motivated to use a bracket (such as taught by Yamamoto) as the means of attachment as this can provide greater strength to the attachment as well as provide a mounting geometry that is tailored to the rod end of the gas spring. If the rod end were mounted

directly to the underside of the work surface platform via a bracket, it would be stationary relative to the work surface platform and would allow the use of a simpler locking handle rather than the use of Bowden cables as used in Zhang.

In addition, and as an example of this gas spring being mounted to the underside of the work surface platform via a bracket, Lindahl—as discussed in this report—discloses a gas spring that is directly fixed to the underside of the work surface platform via a bracket, named a transverse frame bar. Where both Yamamoto and Zhang use hydraulic cylinders or gas springs to transfer load to the work surface platform via slide mechanisms, a POSITA would reasonably decide to simplify the mounting of the gas spring(s) by directly fixing them to the underside of the work surface platform via a bracket, as is shown in Lindahl. Fixing directly to the work surface platform allowed Lindahl to use a simple lever as its gas spring locking mechanism, rather than hydraulics or Bowden cables. See below for the description of the gas spring used in Lindahl.

"An essential feature of the invention is that a blockable gas-spring 17, or piston-cylinder device is provided for enabling the position of the frame-like part 1 to be adjusted vertically in a smooth continuous fashion, both in an upward and in a downward direction. The gas-spring includes a bottom part 18 which is pivotally connected to the leg member 3 beneath the pivot rod 12, and an upper part 19 which is pivotally connected to the transverse frame-bar 15 on the same side of a vertical plane passing through the rod 12 as the lower part 18 (see also Figures 3, 4)." Lindahl 4:5-15

A POSITA would be motivated to use the linkage of Yamamoto, one or more gas springs of Zhang, and mount the spring(s) directly to the underside of the work surface platform via a bracket, as shown in the Lindahl example, in order to provide greater strength to the attachment as well as provide a tailored mounting geometry that is designed to interface with the end of the gas spring.

18P. A desktop workspace that adjusts vertically, comprising:	**YES:** See element 1P.
18a. a work surface platform;	**YES:** See element 1a.
18b. a slidable tray selectively positionable between a stored position under the work surface platform and an extended position that is outward and lowered with respect to the work surface platform,	**YES:** See element 1b.
18c. a base configured to sit on an existing platform; and	**YES:** See element 1c.
18d. a height adjustment mechanism connecting the work surface platform and the base, the height adjustment mechanism including:	**YES:** See element 1d.
18d1. a set of pivot arms that connect at a scissoring pivot point creating a scissoring motion when raising and lowering the work surface platform to various heights;	**YES:** See element 1d1.
18d2. a base pivot point fixed relative to the base and connecting the base and the set of pivot arms;	**YES:** See element 1d2.

18d3. a platform pivot point fixed relative to the work surface platform and connecting the work surface platform and the set of pivot arms;	**YES:** See element 1d3.
18d4. a sliding mechanism on an end of an arm of the set of pivot arms between the end of the arm and either the work surface platform or the base; and	**YES:** See element 1d4.
18d5. a gas spring that assists in elevation of the work surface platform by applying a force to rotate one of the set of pivot arms as part of the scissoring motion,	**YES:** See element 1d5.
18d6. wherein the gas spring, the set of pivot arms, the base pivot point, and the platform pivot point align side-by-side when the desktop workspace is in a fully lowered position such that the desktop workspace adjusts vertically.	**YES:** Yamamoto in view of Zhang discloses that the gas spring, the set of pivot arms, the base pivot point, and the platform pivot point align side-by-side when the desktop workspace is in a fully lowered position such that the desktop workspace adjusts vertically.

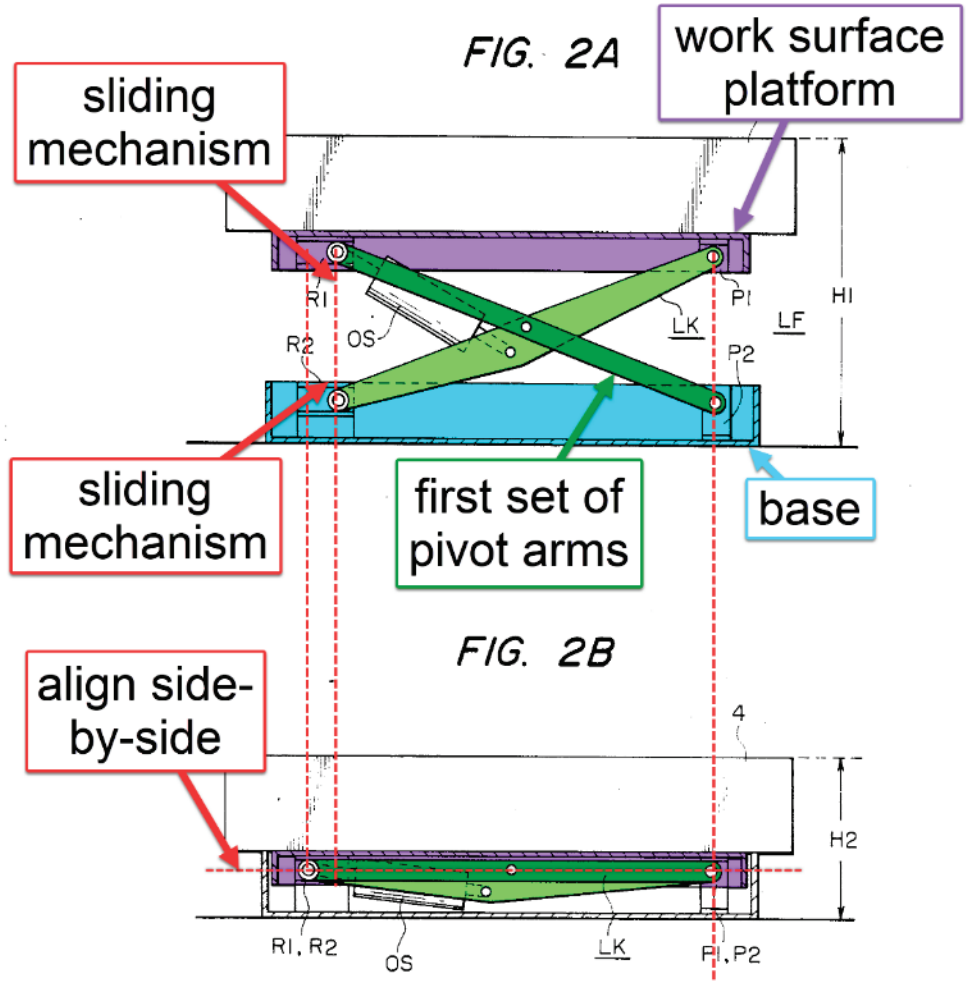

*"The conventional fluidized bed has a fixed height. However, there has been a demand for a fluidized bed having an adjustable height, **specifically one in which the height of the bed above the floor can be made as small as possible** for ease in transferring a patient onto the bed or when a patient gets onto or off the bed, and placed at a suitable height when the patient is lying on the bed for administering treatment to the patient. To meet this demand, it has been proposed to combine a lifter with the bed for adjusting the height of the bed. FIG. 2 illustrates the arrangement of such a mechanism for producing vertical movement" Yamamoto 1:53-64 (emphasis added)*

As shown above, the Yamamoto linkage is arranged such that the first set of pivot arms, the base pivot point, and the platform pivot point align perfectly side-by-side when the workspace is in a fully lowered position. As Yamamoto uses a hydraulic cylinder to lift, the cylinder is also side-by-side with the pivot arms and other associated components. To the extent that this side-by-side alignment is construed to require that all pivot points of the gas spring are aligned on a horizontal line with the other pivot points, the gas spring is at least partially aligned in Yamamoto (i.e. one of the two pivot points of the cylinder is also in alignment).

The locking gas springs of Zhang are mounted such that when permitted to fully collapse as the linkage in Yamamoto does, the gas springs pivot points (and the gas springs as a whole) will be in perfect horizontal alignment with the other pivot points.

As shown above Zhang uses a gas spring to assist in the lifting of the work surface platform as opposed to a hydraulic cylinder such as Yamamoto. Further the gas spring of Zhang is aligned with the rest of the pivot point in the work surface platform frame. In accordance with the teachings of Yamamoto (i.e. the desirability for compactness) and in accordance with the well-understood desire of compactness as taught in Zhang[219], a POSITA would be motivated to combine the linkage of Yamamoto with the linkage of Zhang in a way that the scissor arms will line up flat when the platform is fully lowered.

Further still, a POSITA will understand that gas springs are approximately constant force devices, unlike hydraulic cylinders such as used in Yamamoto. A POSITA will further understand that the actuator has the worst mechanical advantage for lifting the platform at the bottom (fully lowered) position. In this position the cylinder of Yamamoto is nearly horizontal. In other words, the actuator is least effective and must generate the largest force to lift the work surface platform when doing so from the fully lowered position. As stated earlier, a POSITA will recognize that a gas spring will be little utility to lift the platform when in this position. Thus, the lifting assistance provided by a nearly horizontal gas spring would be out-weighed by the loss of compactness offered by keeping the gas spring in a non-horizontal orientation. Thus, a POSITA would be motivated to combine the linkage of Yamamoto with the gas spring placement already in Zhang to have maximum compactness in the stowed position.

Were the gas spring to be oriented like the hydraulic cylinder of Yamamoto, the gas spring force would have to be increase significantly which would make the platform more difficult to adjust when at the top position. This could even make the table dangerous to adjust as the gas spring would develop greater and greater mechanical advantage as the platform is raised causing it to violently pop up at the end. Further, this would make the platform much more difficult to compress starting from the top. This is because gas-springs are not able to vary their output force in the same way as hydraulic cylinders.

Thus, the combination of Zhang in view of Yamamoto is configured such that the gas spring, the first set of pivots arms, the base pivot point, and the platform pivot point align side-by-side when the desktop is in a fully lowered position. As discussed previously, it is the very nature of scissor lift mechanisms generally to adjust vertically.

[219] See Zhang at [0002-3]

As shown above, Yamamoto in view of Zhang, and in further view of HJ Zottel with the knowledge of a POSITA renders obvious each and every element of the Asserted Claims of the ’926 patent. In addition to this, certain things that would be well within the ordinary knowledge and familiarity of a POSITA are also explicitly demonstrated in Drabczyk. For at least the reasons shown above, it is my opinion that the Asserted Claims of the ’926 patent are invalid due to obviousness under 35 U.S.C §103.