Dec. 17, 1940. H. J. ZOTTEL 2,225,243

DESK

Filed June 3, 1938 3 Sheets-Sheet 1

Fig. 1

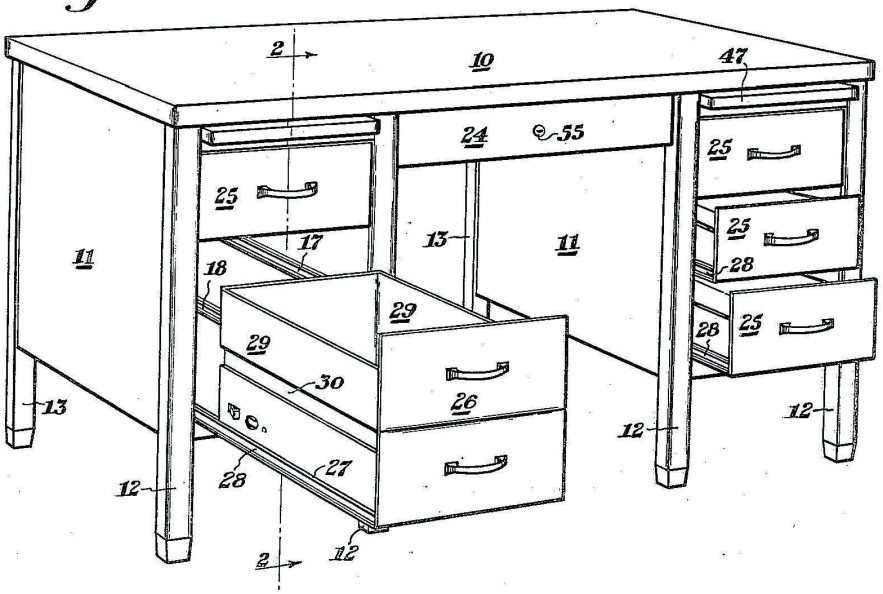

Fig. 2

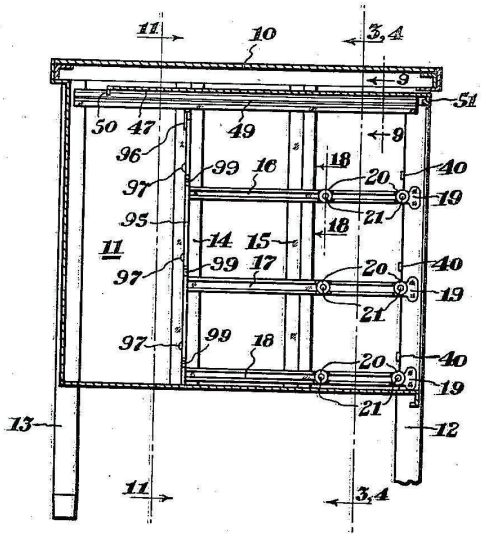

INVENTOR.
Herman J. Zottel
BY Rice & Rice
ATTORNEYS.

Witness:
John J. Braddock

Exhibit 1013-1

Dec. 17, 1940. H. J. ZOTTEL 2,225,243

DESK

Filed June 3, 1938 3 Sheets-Sheet 2

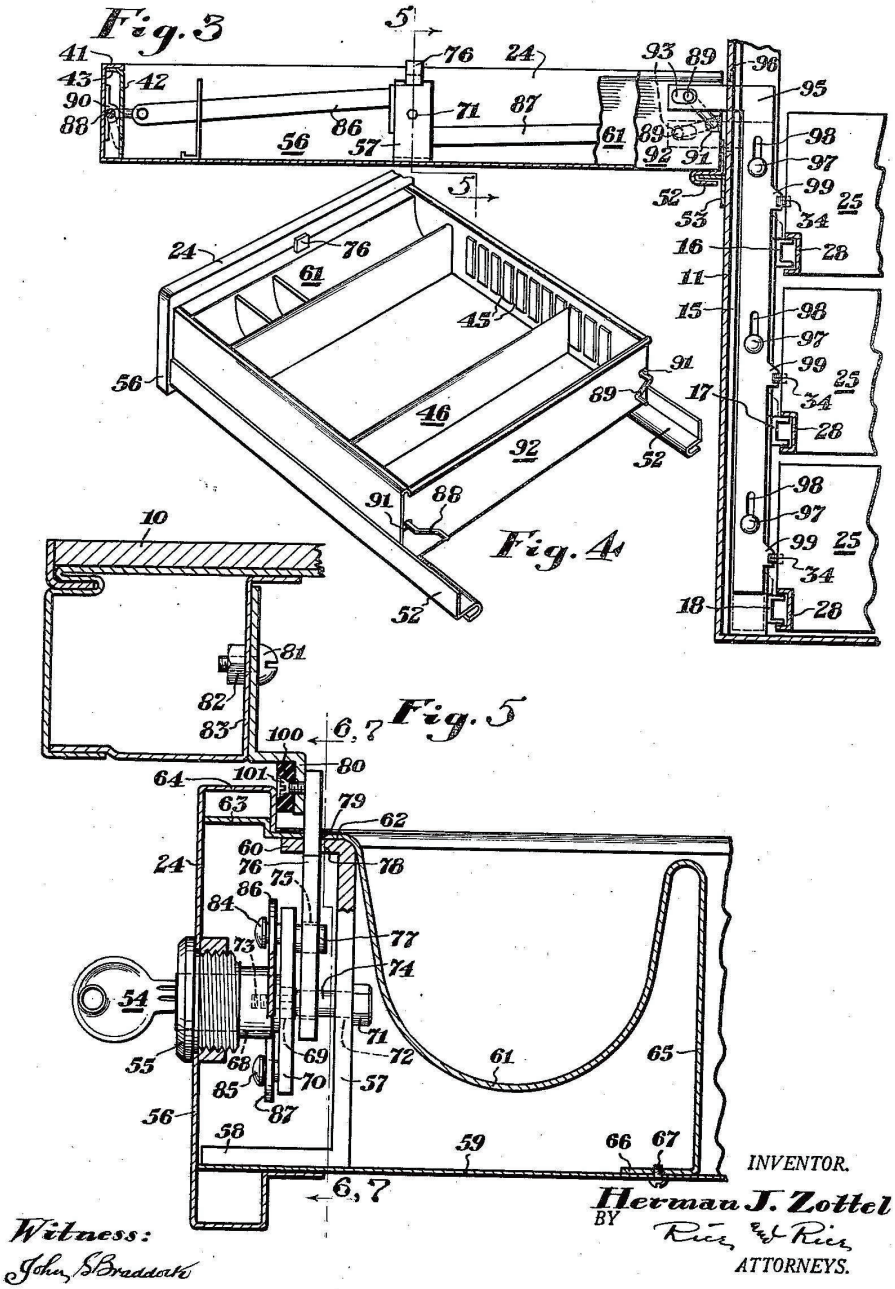

Exhibit 1013-2

Dec. 17, 1940. H. J. ZOTTEL 2,225,243

DESK

Filed June 3, 1938 3 Sheets-Sheet 3

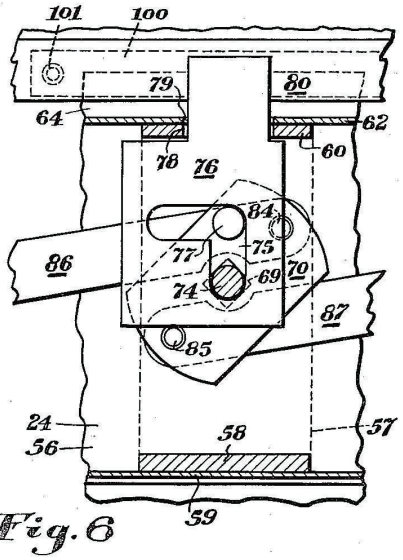

Fig. 6

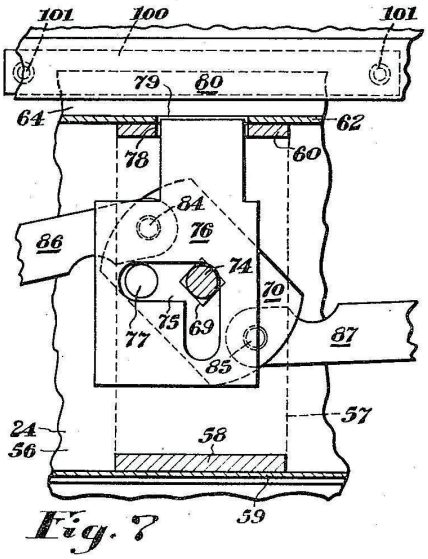

Fig. 7

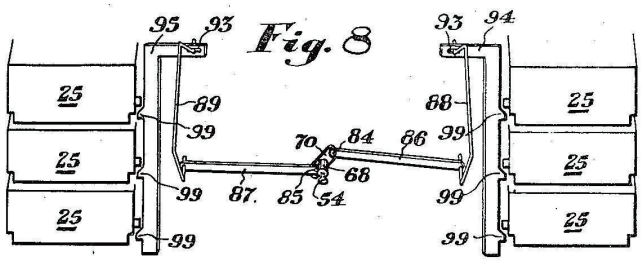

Fig. 8

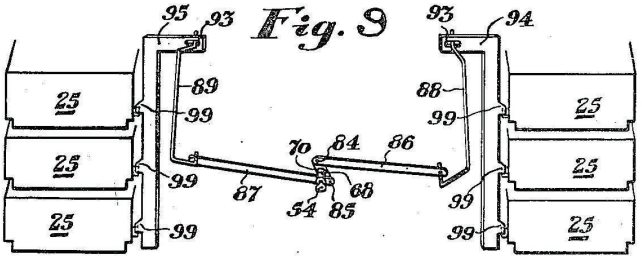

Fig. 9

INVENTOR.
Herman J. Zottel
BY Rice & Rice
ATTORNEYS.

Witness:
John J. Braddock

Exhibit 1013-3

Patented Dec. 17, 1940 2,225,243

UNITED STATES PATENT OFFICE

2,225,243

DESK

Herman J. Zottel, Grand Rapids, Mich., assignor to Metal Office Furniture Company, Grand Rapids, Mich., a corporation of Michigan

Application June 3, 1938, Serial No. 211,497

5 Claims. (Cl. 45—94)

The present invention relates to desks and more particularly to office desks fabricated from stamped sheet metal.

The primary objects of the instant invention are to provide a desk having a plurality of box drawers and one or more vertical letter file drawers of approximately twice the depth of a single box drawer, each vertical letter file drawer being interchangeable with any given two vertically adjacent box drawers; and, to provide such a desk having locking means for the drawers including a master lock and suitable connections therewith whereby when the master lock is in unlocked position, any given drawer may be opened independently of any of the other drawers.

An illustrative embodiment of the invention is shown in the accompanying drawings, wherein—

Figure 1 is a perspective view of the desk, certain of the drawers being shown in different partially withdrawn positions;

Figure 2 is a view thereof on line 2—2 of Figure 1, the drawers being omitted in this view;

Figure 3 is an enlarged view on line 3—3 of Figure 2, portions thereof being broken away;

Figure 4 is an enlarged rear perspective view of the center drawer of the desk;

Figure 5 is a sectional view, enlarged, on line 5—5 of Figure 3;

Figure 6 is a view on line 6—6 of Figure 5 showing certain locking parts in their locking position;

Figure 7 is a view on line 7—7 of Figure 5 and similar to Figure 6 but showing the locking parts in their unlocking positions;

Figure 8 is a diagrammatic view to illustrate the locking connections in their unlocked positions and independently of the other parts of the desk; and

Figure 9 is a diagrammatic view similar to that shown in Figure 8 but showing the locking connections in their locked position.

Referring then to these drawings wherein like numerals designate like parts of the structure in the several views, the desk there shown is constructed entirely of stamped sheet metal and is especially adapted for use in offices. The desk comprises a top 10 supported by drawer supporting pedestals 11 having front legs 12 and rear legs 13 attached thereto. Each drawer supporting pedestal 11 is provided with spaced vertical uprights 14, 15 secured to the inner sides thereof and spaced horizontal drawer guides 16, 17, 18 of channel bar construction are secured as by spot welding to the uprights 14, 15 and front legs 12 of the desk. The horizontal flanges 19 of the drawer guides 16, 17, 18 are flattened out at their forward ends to afford a greater surface for welding to the front legs 12 and these horizontal flanges are also cut away to accommodate antifriction rollers 20 mounted on studs 21 disposed in apertures in the drawer guides 16, 17, 18.

As best shown in Figure 1, the desk is provided with a center drawer 24 between the pedestals 11, with box drawers 25 and with a vertical letter file drawer 26, the drawers 25, 26 being slidably mounted in the drawer supporting pedestals 11. Each drawer 25 and 26 is provided with a recess 27 along each of its lower side edges and channel runners 28 are secured as by spot welding within each recess 27. The runners 28 of each drawer slidably engage a pair of drawer guides 16, 17 or 18 to thus slidably mount each drawer within a pedestal 11.

The vertical letter file drawer 26 is approximately twice the depth of each box drawer 25 and each side 29 of the vertical letter file drawer 26 is provided with a channel 30 which, as shown, affords clearance between this drawer and the oppositely disposed drawer guides 17. By this arrangement, the vertical letter file drawer 26 may be moved from its position shown in Figure 1 to occupy the space adapted to accommodate any two adjacent box drawers 25 and the channels 30 always afford clearance for the upper pair of guides in the space so occupied or, if preferred, each pedestal 11 may house three box drawers 25 as indicated in Figure 8.

The locking mechanism for the drawers is principally housed within the center drawer 24 and is so constructed that when a key 54 is turned in a master lock 55 mounted medially of the center drawer front 56, any of the drawers of the desk are free to open independently of any of the other drawers.

A supporting bracket 57 (Figure 5) is provided with a forwardly extending bottom flange 58 secured as by welding to the bottom 59 of the center drawer 24 and beneath the master lock 55 and with a forwardly extending top flange 60. A pin tray 61 has a horizontal portion 62 supported by the top flange 60 of the bracket 57 and a front marginal portion 63 engaging beneath a rearwardly-downwardly extending flange 64 on the top of the drawer front 56. The vertical rear wall 65 of the pin tray 61 is provided with a forwardly extending bottom flange 66 secured by a screw 67 to the drawer bottom 59 and the pin tray thus conceals those parts of

the locking mechanism mounted in the front of the drawer.

The rotatable lock barrel 68 has a reduced and squared inner end 69 which receives a plate 70 having a square central aperture therethrough. A stud 71 passes through an aperture 72 in the supporting bracket 57 and the reduced forward end 73 of the stud is centrally threaded into the lock barrel 68. The shank 74 of stud 71 extends through an L-shaped slot 75 in a lock bolt 76 and a pin 77 on the plate 70 likewise extends through the L-shaped slot 75. The reduced upper portion of the lock bolt extends through a slot 78 in the top flange 60 of the supporting bracket 57 and an adjacent slot 79 in the horizontal portion 62 of the pin tray 61.

When the parts of the locking mechanism are in their locking positions shown in Figures 5 and 6, the lock bolt 76 engages behind a keeper 80 secured by a bolt 81 and nut 82 to the supporting frame 83 of the desk top 10. Thus the center drawer 24 is restrained against opening movement. When the key 54 is turned, plate 70 is rotated to its position shown in Figure 7, and the pin 77 of the plate 70 draws the lock bolt 76 downwardly to unlocking position. During movement of the lock bolt 76 in either direction, the same is guided in a vertical direction by the slots 78 and 79 and the stud 71 which travels in a portion of the L-shaped slot 75. Stud 71 also serves to limit the movement of the bolt in either direction by contacting the ends of the portion of slot 75 in which it travels.

The plate 70 is provided with diametrically opposite forwardly extending wrist pins 84 and 85 and the inner ends of oppositely extending connecting links 86 and 87 are secured to the wrist pins 84 and 85 respectively. The outer ends of connecting links 86 and 87 are connected to the forward ends of cranks 88 and 89 respectively, which cranks are disposed in bearings 90 on the opposite outer side walls of the center drawer 24. These cranks 88 and 89 extend the length of the drawer and through apertures 91 in the rear wall 92 of the center drawer 24 and the cranks and their bearings 90 are concealed between the outer and inner side walls of the center drawer, as best shown in Figure 4.

When the center drawer is in its closed position, the rearward ends of the cranks 88, 89 extend into slots 93 in the horizontal upper portions of locking bars 94, 95 respectively. These upper portions of the locking bars 94, 95 extend through slots 96 in the inner walls of the drawer supporting pedestals 11 and the vertical portions of the locking bars are concealed within the pedestals 11 and are each vertically slidably mounted adjacent an upright 14 by means of pins 97 extending through slots 98 in the locking bars (see Figures 2 and 3).

Each locking bar 94, 95 is provided with vertically spaced stops 99 extending inwardly toward the drawers in the pedestals 11 and these stops engage the latches 34 of the drawers when the drawers are in closed positions and the locking bars are in their raised locking positions. It will thus be seen that when the master lock 55 in the center drawer 24 is turned to unlocking position, the links 86 and 87 are moved outwardly, rotating the cranks 88 and 89 by which movement the locking bars 94, 95 are moved downwardly to the position shown in dotted lines in Figure 3, and the drawers are permitted to open. When the center drawer is opened, the rearward ends of the cranks 88, 89 move with the drawer out of engagement with the slots 93 of the locking bars 94, 95. The locking bars, however, remain in the lowered position shown, the upper ends of slots 98 resting on the pins 97 in this lowered position.

A rubber bumper 100 secured by screws 101 to the forward edge of the keeper 80 for the center drawer's lock bolt 76, stops closing movement of the center drawer by contacting the flange 64 of the center drawer front when the lock bolt 76 is lowered, or by contacting the lock bolt 76 when the same is raised. Thus, since the drawer can not be completely closed unless the parts of the locking mechanism are in unlocked positions, it is insured that the rearward ends of cranks 88, 89 will be in position to enter the slots 93 of the locking bars 94, 95 when the center drawer is completely closed.

It will thus be seen that a metal office desk is herein shown whose vertical letter file drawer may be placed in either drawer pedestal, that its drawers are of improved construction and are conveniently removable and interchangeable, that an improved sliding shelf and mounting therefor has been provided, and that new and improved locking mechanism provides means whereby any given drawer may be opened independently of any other drawer.

While but one specific embodiment of the invention has been herein shown and described, it will be understood that certain details of the construction shown may be altered or omitted without departing from the spirit of this invention as the same is defined by the following claims.

I claim:

1. In a desk structure, a plurality of drawers slidably mounted in the structure, a master lock mounted in the front of one of said drawers and having a bolt, a keeper for the bolt mounted on the desk structure, a crank disposed in said drawer forwardly-rearwardly thereof having its forward end operatively connected to said master lock, latches on the other drawers, and a locking bar having stops thereon adapted to engage said latches operatively connectable to the rearward end of said crank upon the closing of said drawer and movable with said master lock to locking or unlocking positions.

2. In a desk structure, a plurality of drawers slidably mounted in the structure, a master lock mounted in the front of one of said drawers and having a rotatable lock barrel, a bolt mounted on the drawer and provided with a slot therein, a plate mounted on the lock barrel rotatably therewith and having a pin movable in said slot for effecting movement of the bolt between its locking and unlocking positions, a keeper for the bolt mounted on the desk structure, a crank disposed in said drawer forwardly-rearwardly thereof, a link operatively connecting the plate with the forward end of the crank, latches on the other drawers, a locking bar having stops thereon adapted to engage said latches operatively connectable to the rearward end of said crank upon the closing of said drawer and movable with the lock barrel to locking or unlocking positions.

3. In a desk structure, a plurality of drawers slidably mounted in the structure, a master lock mounted in the front of one of said drawers and having a bolt, a keeper for the bolt mounted on the desk structure, said drawer having a side thereof comprising spaced dual walls, a crank disposed between said walls extending forwardly-rearwardly of the drawer and having its forward

end operatively connected to the master lock, latches on the other drawers, and a locking bar having stops thereon adapted to engage said latches operatively connectable to the rearward end of said crank upon the closing of said drawer and movable with said master lock to locking or unlocking positions.

4. In a desk structure, a plurality of drawers slidably mounted in the structure, a master lock mounted in the front of one of said drawers and having a bolt, a keeper for the bolt mounted on the desk structure, a crank disposed in said drawer forwardly-rearwardly thereof having its forward end operatively connected to said master lock, latches on the other drawers, a locking bar having stops thereon adapted to engage said latches and having a slot therein in which the rearward end of said crank operatively engages in the closed position of the drawer.

5. In a desk structure, a plurality of drawers slidably mounted in the structure, a master lock mounted in the front of one of said drawers and having a bolt, a keeper for the bolt mounted on the desk structure, a crank disposed in said drawer forwardly-rearwardly thereof having its forward end operatively connected to said master lock, latches on the other drawers, a locking bar having stops thereon adapted to engage said latches and having a slot therein in which the rearward end of said crank operatively engages in the closed position of the drawer, said locking bar being normally in unlocking position but movable with the crank to locking position, and means on the desk structure adapted to engage the lock's bolt to prevent complete closing of the drawer when said crank is in its locking position.

HERMAN J. ZOTTEL.

Exhibit 1013-6