Nov. 1, 1966 J. E. CLARKE 3,282,566

SCISSORS OPERATING LINKAGE

Filed May 18, 1964

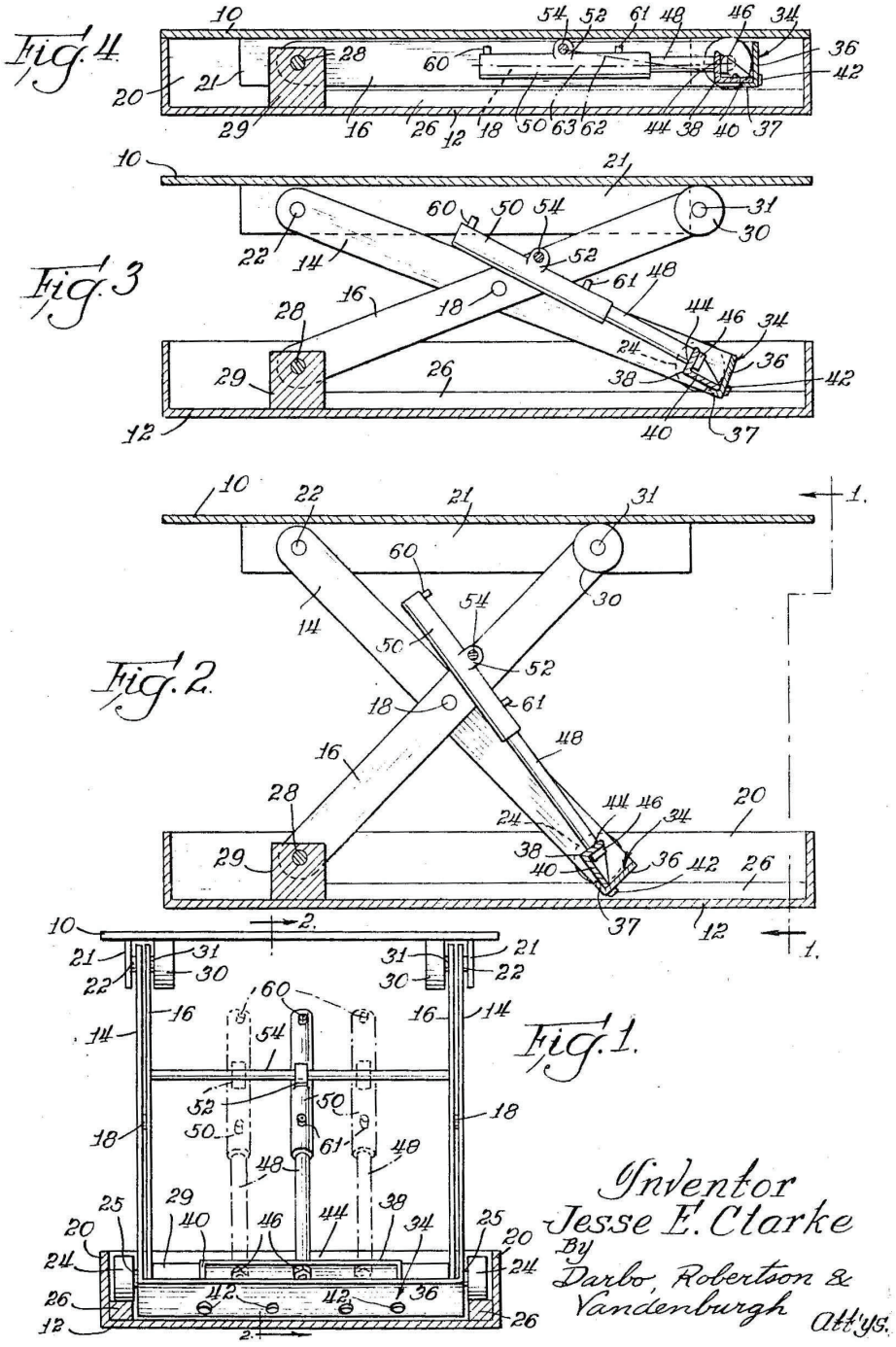

Inventor
Jesse E. Clarke
By
Darbo, Robertson & Vandenburgh
Att'ys.

Exhibit 1014-1

United States Patent Office

3,282,566

Patented Nov. 1, 1966

1

3,282,566
SCISSORS OPERATING LINKAGE

Jesse E. Clarke, Hinsdale, Ill., assignor to Autoquip Corporation, Chicago, Ill., a corporation of Illinois

Filed May 18, 1964, Ser. No. 368,249
2 Claims. (Cl. 254—122)

This invention relates to the operation of a scissors lift in changing it from a down or closed position to up or open position. It is particularly employed in connection with lift tables and the like.

As previously used, a completely closed scissors linkage on lift equipment is ordinarily pried open and is extended through the use of cams or rollers. In the present invention, by mounting a hydraulic cylinder so that the mounting points are substantially offset from the axis of the cylinder, a component of force is obtained on the mounting points with the component being normal to the axis of the cylinder. This component is employed to open the closed scissors linkage.

A principal object of the invention is therefore to eliminate the extra cams, or rollers, etc., normally employed to start the movement of a scissors lift from the closed position. A simple hydraulic cylinder is employed for all phases of the lifting or operation of the scissors linkage.

Other objects of the invention are: to provide a sleeve type operating cylinder having a direct thrust with eccentric bearings; to provide for a significant thrust component offset from the cylinder axis for breaking the scissors linkage open; and in general, to provide a more simple and efficient direct thrust lifting mechanism for this linkage.

Other objects of the invention will appear in the specification and will be apparent from the accompanying drawings, in which:

FIG. 1 is an elevation, partly in section as taken on the line 1—1 of FIG. 2 of a scissors lift and eccentrically loaded power cylinders in accordance with this invention, as applied to a raisable lift table in its up position;

FIG. 2 is a sectional view of FIG. 1 as taken on a line 2—2 of FIG. 1;

FIG. 3 is a sectional view, showing the parts of FIG. 2 in partially lowered position; and

FIG. 4 is a sectional view of the table and its parts in the closed or down position.

Although the following disclosure offered for public dissemination is detailed to ensure adequacy and aid understanding, this is not intended to prejudice that purpose of a patent which is to cover each new inventive concept therein no matter how others may latter disguise it by variations in form or additions or further improvements. The claims at the end hereof are intended as the chief aid toward this purpose; as it is these that meet the requirement of pointing out the parts, improvements, or combinations in which the inventive concepts are found.

In this invention, a lift table with a completely closed scissors linkage is raised by one or more hydraulic cylinders, depending upon the lifting force necessary, without the use of pryers, cams, or power rollers. The cylinders are mounted eccentrically to the crossed legs and a sufficient force is generated to open or raise the closed linkage by a direct thrust made possible by the offset position of the cylinder mountings with respect to the cylinder axis. To achieve the required operation the cylinder mountings should be offset by a distance greater than the internal diameter of the hydraulic cylinder.

Referring now more particularly to the drawings, the invention comprises a lift table having a top **10** and a base **12** connected by crossed scissors legs **14** and **16** at each side. Legs **14** and **16** are pivotally connected at **18**. As shown, the base **12** is in the form of an open shallow box or receptacle having upright sides **20**, and the top **10** fits

2

down closely upon the sides enclosing all the operating parts, as shown in FIG. 4.

Depending from the top, at each side, is a plate **21**. A pivot **22** near one end of the plate **21** connects the upper end of the leg **14** to the plate. Leg **14** has a roller **24** rotatably mounted at the other end on shaft **25**. Roller **24** rides on the upper surface of a strip **26** in the bottom of one side of the base **12**. One end of the other leg **16** has a pivot **28** connecting it to a support block **29** directly below the pivot **22** for the leg **14**. A roller **30** mounted on shaft **31** at the other end of leg **16** rides on the under side of the table top **10**. The legs are closely folded together by the pivot **18** intermediate their ends, for parallel scissor action between the base and the top.

Attached to the roller ends of the outer legs **14** is a cross piece **34** which may be in the form of an angle bar having one web **36** extending across the bottom ends of legs **14** with a shorter web **37** normal thereto. A second and shorter angle bar **38** has two webs **40** and **44**. Web **40** is pivotally connected to web **36** by studs **42** projecting from web **40** and extending through openings in web **36**. Additional pistons and cylinders may be employed as suggested by the dot-dash lines. A reinforcing plate **46** is employed in angle **38** at the point where a piston is secured. The outer end of piston **48** of hydraulic cylinder **50** is secured to web **44**. The mounting of angle **38** to angle **36** provides for a somewhat flexible movement of the outer ends of the pistons **48**, with an effective mounting point (e.g. **42**) for the application of pressure. This mounting point is offset at one side of the piston axis and is below the center line of the legs **12**.

Cylinder **50** has a side mounting plate **52** pivotally mounted on a rod **54**. Rod **54** extends between the two opposite legs **16** to which it is connected. It is located at the side of the cylinder **50** opposite the pivotal mountings formed by studs **42**. This rod **54** is at the upper side of the legs **16** above the common pivot **18** for the legs (FIGURE 4), and the mountings **52** extend downwardly. In the down position the cylinders will be entirely below the upper edges of the legs **16** to which they are connected.

In FIGURE 4, it will be seen that the line **62** which connects the rod **54** and the studs **42** for the hydraulic cylinder is angularly disposed with respect to the axis **63** of the cylinder. Line **62** also is at an angle to the longitudinal axes of legs **14** and **16** when the scissors linkage is closed. The pivotal mountings formed by studs **42** and rod **54** for the hydraulic cylinder should be offset from the axis **63** of the cylinder an amount that is greater than the internal diameter of the cylinder **50** (or the external diameter of the piston).

With reference to FIGURE 4 it will be seen that as piston **48** is forced out of cylinder **50** a vertical component of this force is developed upwardly at the pivotal mounting of the cylinder on rod **54**. This vertical component will break the scissors linkage open from the FIGURE 4 position and start the table moving upwardly.

It is necessary to have the best possible running fit between piston **48** and cylinder **50**. A bearing surface of Teflon (polymerized tetrafluoro ethylene) plastic has been found to be most suitable. An ideal method for forming a bearing that is suitable is disclosed in Patent 3,061,887. The eccentric mounting of the cylinders results in twisting and side loads on the piston which would damage the inner cylinder walls if not properly protected.

To supply air or fluid pressure, each cylinder **50** is provided with an inlet **60** near its outer end to which some suitable connection (not shown) is made. Adjacent the other end is a pipe **61** which may be used as an exhaust, or connected to the pressure source through a suitable valving arrangement if the cylinder is to be double acting.

Exhibit 1014-2

I claim:

1. In a lift table having a base and a top connected by a scissor linkage comprising at least two legs pivotally connected intermediate their ends and with one end of one leg pivotally connected to the top and one end of the other end pivotally connected to the base and hydraulic means including a cylinder and piston connected for controlling the angular position of the legs with respect to each other, which linkage is of the type that may be collapsed to the extent that the two legs are substantially parallel, the improvement comprising, a first pivotal mounting connection on the cylinder and a second pivotal mounting connection on the piston, said connections being spaced apart in a direction at right angles to the axis of the cylinder a distance greater than the internal diameter of the cylinder, whereby extension of the piston from the cylinder will create a force component at the connections in a direction normal to the axis of the cylinder.

2. In a lift table as set forth in claim 1 wherein each

said mounting is offset to one side of a line extending between said two pivotal connections on the leg associated with said mounting.

References Cited by the Examiner

UNITED STATES PATENTS

2,501,001	3/1950	Neely	254—122
2,704,221	3/1955	Gwinn.	
3,032,319	5/1962	Dale	254—122

FOREIGN PATENTS

1,306,404	9/1962	France.
1,348,093	2/1963	France.
204,328	10/1939	Switzerland.

EVON C. BLUNK, *Primary Examiner.*

H. C. HORNSBY, *Assistant Examiner.*

Exhibit 1014-3