73. As will be demonstrated in the charts below, at least claims 1-10, 12, 14-16, and 18 are rendered obvious by Huang in view Clarke and in further view of HJ Zottel. For reference these three pieces of prior art are shown below:

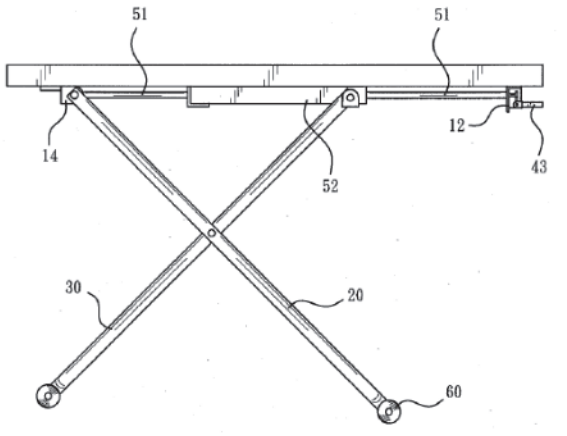	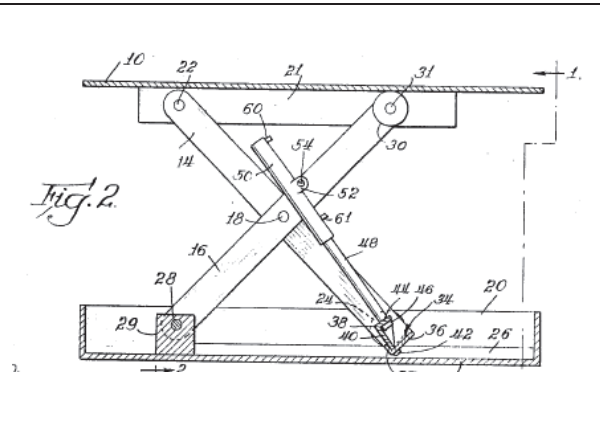	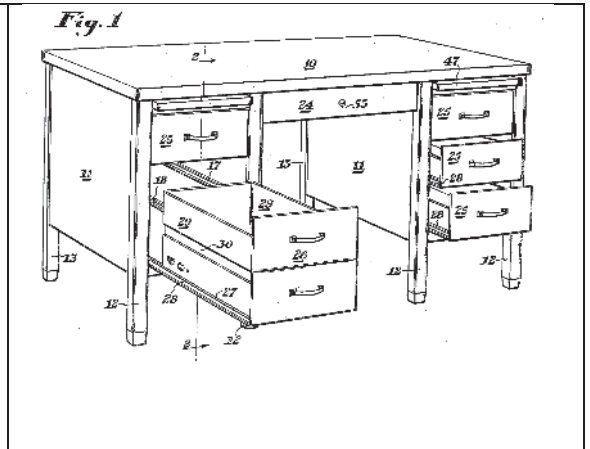
US 2014/0041554 to Huang February 13, 2014	US 3,282,566 to Clarke May 18, 1964	US 2,225,243 to HJ Zottel June 3, 1938

74. I note that while the later published patent to Huang was before the examiner, the earlier published application of Huang was not. Further, US D308,537 to Clark was not before the examiner despite being publicly available. A POSITA would be motivated to combine these references in accordance with the teachings therein. For example, Huang and Clarke are both vertically adjustable platforms that use a scissor linkage and cylindrical actuator. They are highly compatible with each other. For example, both Clarke and Huang are completely collapsible. That is to say, both the Huang linkage and the Clarke linkage are able to collapse to a point where the links and the actuators are aligned side-by-side. Huang is able to collapse to a point where even the pivot locations of the actuator are in alignment. This is an important and well-known design consideration for collapsible tables. For example, the Huang application states the following

> *"FIG. 7 is a schematic operational view of the present invention, illustrating the table being stored. Executing the aforementioned operation, the table presents a flat volume after adjustment, whereby the table is allowed to be stored in a relatively narrow space such as the space under a bed or a sofa, in order to achieve the objective of saving space."*[137]

[137] Huang Application [0026]

75. A POSITA would further be motivated to combine the base of Clarke with the Huang mechanism to gain ordinary and well-known advantages. For example, were Huang to be used on a delicate surface, its small rollers would cause concentrated pressure points. Further, the rolling action of the legs of Huang would cause increased wear over time. A POSITA will recognize this fact and be motivated to incorporate the base as taught by Clarke which presents a broad base surface. This base surface more evenly distributes the pressure and does not have any relative motion such as small rolling wheels. This principle is well-known. For example, US patent no. 3,333,805 to W. C. Marshall (circa 1965) states the following:

> *"It is well known to use a sheet of generally rigid material over office carpeting adjacent the knee well of a desk to provide a surface support for an office chair or the like so that not only will the carpet itself be protected from wear due to movements of the user's feet and the chair casters thereover, but also the sheet provides a smooth hard surface to facilitate maneuvering of the chair with respect to the desk."*[138]

76. Further, when combining the teachings of HJ Zottel with the combination of Huang in view of Clarke, a POSITA would be motivated to use a top-mount drawer as that is the most convenient mount type for a desk of this sort. A bottom mounted drawer slide will not be suitable as there is no structure below to support the drawer. Further, a side mounted drawer is feasible however, doing so requires installing a top-mounted bracket which provides structure to support the drawer. This is functionally equivalent to a top-mounted drawer. Thus, for at least these reasons, a POSITA will be motivated to combine the teachings of HJ Zottel in the form of a top-mounted drawer in a manner as is well-known.

Challenged Claim '926	
1P. A desktop workspace that adjusts vertically, comprising:	**YES:** While the preamble is generally not considered limiting, both Huang and Clarke disclose a desktop workspace that adjusts vertically.

[138] US 3,333,805 at 1:15-22

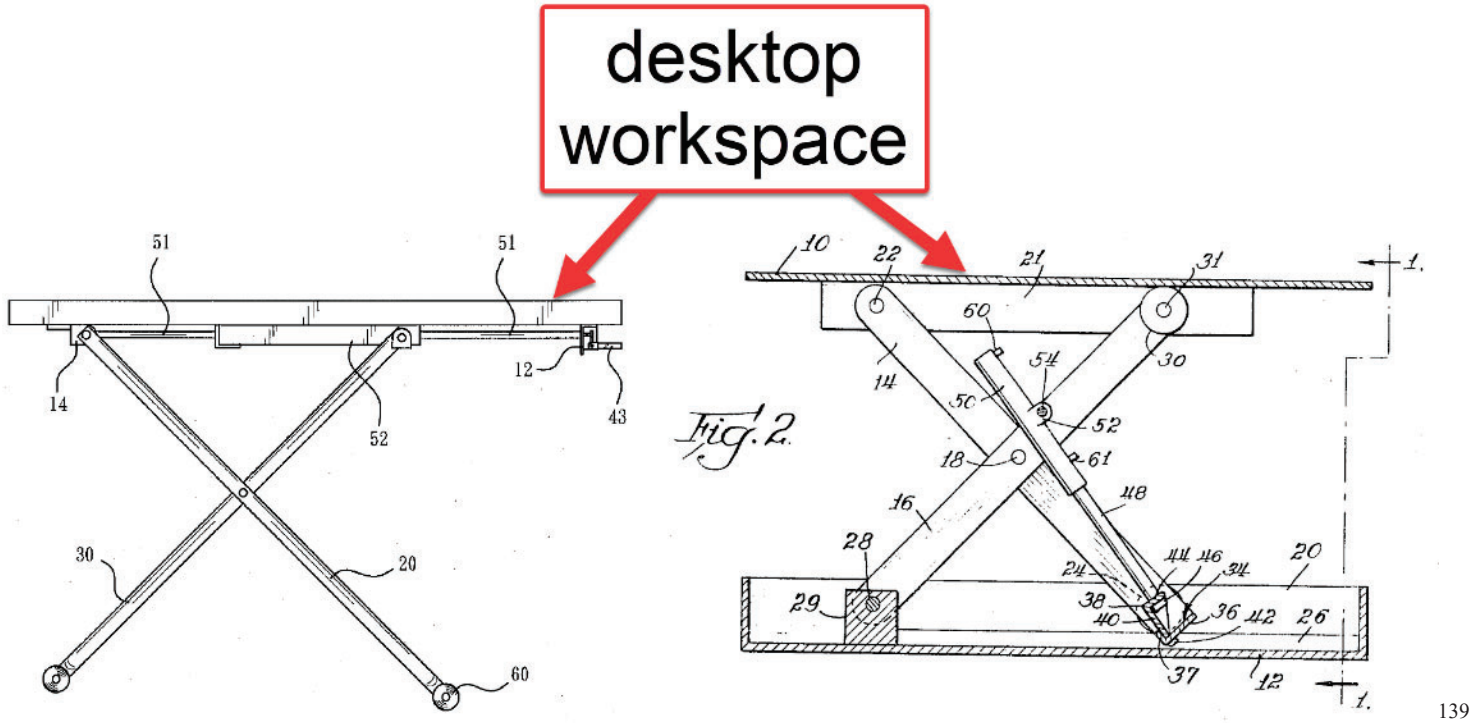

[139]

A POSITA will understand that scissor lift mechanisms adjust the vertical height of a platform surface such as a desktop workspace.

Huang discloses a desktop workspace that adjusts vertically:

"A height-adjustable table includes a table board, a first foot, a second foot, an air pressure bar and an assistant device. The first foot crossly and pivotally connects with the second foot, wherein one end of the first foot pivotally connects with a first fastener on the bottom side of the table board, and one end of the second foot pivotally connects with a pivot joint." Huang, Abstract

As shown above, Huang describes a vertically adjustable workspace platform. A POSITA would readily recognize that the Huang vertical adjustment mechanism could be used for a wide variety of applications, as scissor lift mechanisms are extremely common and well-known.

[139] Huang Figure 5 and Clarke Figure 2, annotated

Clarke also teaches a desktop workspace that adjusts vertically. For example, Clarke states:

"This invention relates to the operation of a scissors lift in changing it from a down or closed position to up or open position. It is particularly employed in connection with lift tables and the like." Clarke 1:8-11

As shown above, the Clarke linkage is intended for use in lift tables *generally.* As such, a POSITA will recognize its teachings as being applicable to lift mechanisms of many different types including that of a desk workspace style lift table. It is helpful to ascertain the plain and ordinary meaning and scope of "desktop workspace" considering the common dictionary definitions as shown below:

Desktop: the top of a desk[140]
Desk: A table, counter, or booth at which specified services or functions are performed[141]
Workspace: An area used or allocated for one's work, as in an office.[142]

The usage of the term desktop workspace within the '926 patent is consistent with the plain and ordinary meaning of the words from which this compound term is composed. For example, the desktop workspace in the '926 patent is described as having a top surface at which an operator stands to perform their work.[143] In just the same way, Clarke discloses a work surface in the form of a lift table. A POSITA will understand that a lift table is a common piece of equipment that can be used to lift components to a more suitable height for laborers to perform their work at. Similarly, Huang discloses a table board surface which is a dedicated space allocated for one's work should they so choose.

1a. a work surface platform;	**YES:** Both Huang and Clarke disclose a work surface platform.

[140] <https://www.ahdictionary.com/word/search.html?q=desktop> accessed Dec 29, 2024
[141] <https://www.ahdictionary.com/word/search.html?q=desk> accessed Dec 29, 2024
[142] <https://www.ahdictionary.com/word/search.html?q=workspace> accessed Dec 29, 2024
[143] '926 patent 1:33-66

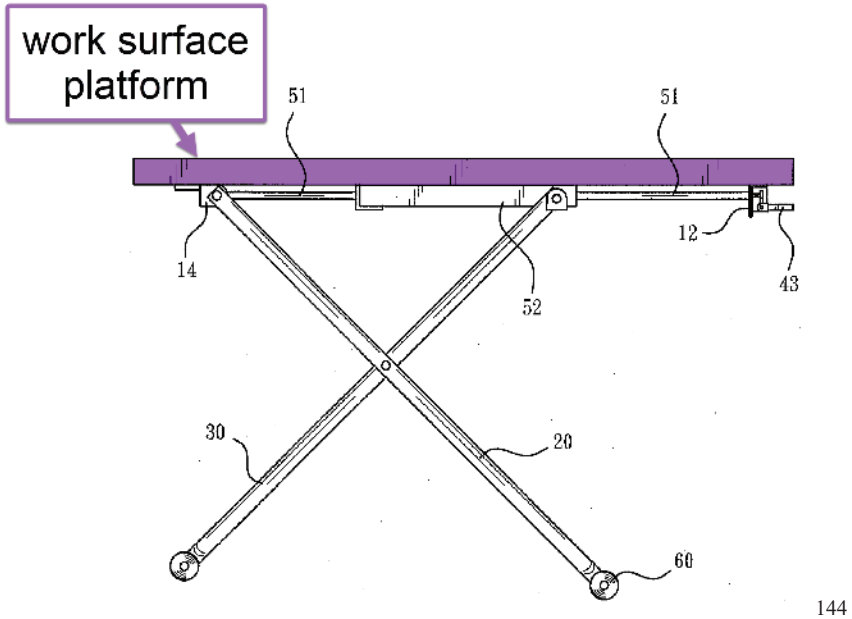

144

"The present invention relates to height-adjustable tables and more particularly, to an adjustable table with an assistant device." Huang 0002

"The adjustable table with an assistant device comprises a table board 10, a first foot 20, a second foot 30." [Huang 0015]

As shown above, Huang describes a work surface platform (i.e. table board 10, highlighted in purple above) that is intended to be used as a work surface platform. A POSITA will understand that a table board is perfectly suitable for use as a work surface.

Clarke also discloses a work surface platform as shown below:

[144] Huang, Figure 5, Annotated

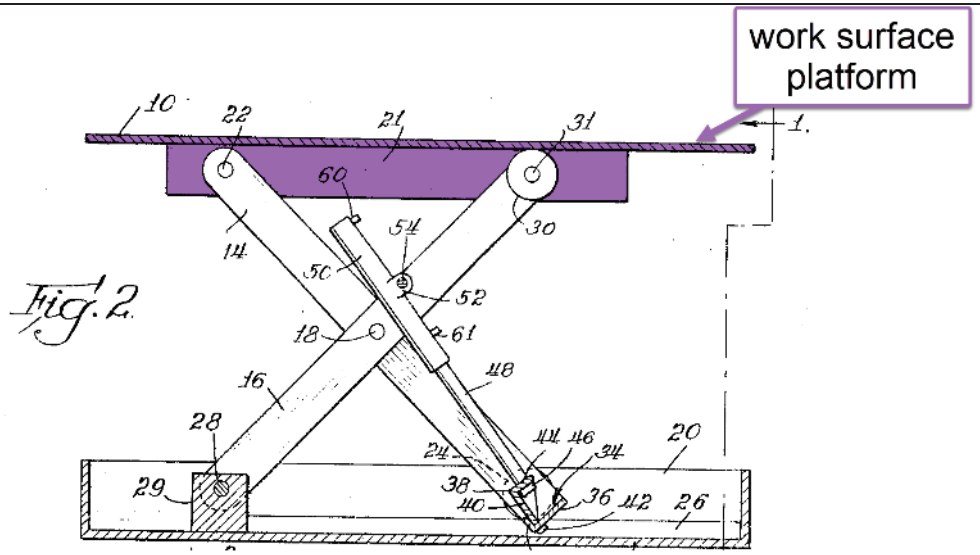

[145]

Referring now more particularly to the drawings, the invention comprises a lift table having a top 10 and a base 12 connected by crossed scissors legs 14 and 16 at each side. Legs 14 and 16 are pivotally connected at 18. As shown, the base 12 is in the form of an open shallow box or receptacle having upright sides 20, and the top 10 fits down closely upon the sides enclosing all the operating parts, as shown in FIG. 4." Clarke 1:67-2:2

As shown above, Clarke discloses a lift table. A POSTIA understand that lift tables are useful for raising objects to various heights to be worked on. As such, a lift table is a clear example of a vertically adjustable work surface platform.

1b. a slidable tray selectively positionable between a stored position under the work surface platform and an extended position that is outward and lowered with respect to the work surface platform,	**YES:** Huang in view of Clarke and in further view of HJ Zottel discloses a slidable tray selectively positionable between a stored position under the work surface platform and an extended position that is outward and lowered with respect to the work surface platform.

[145] Clarke, Figure 2, Annotated

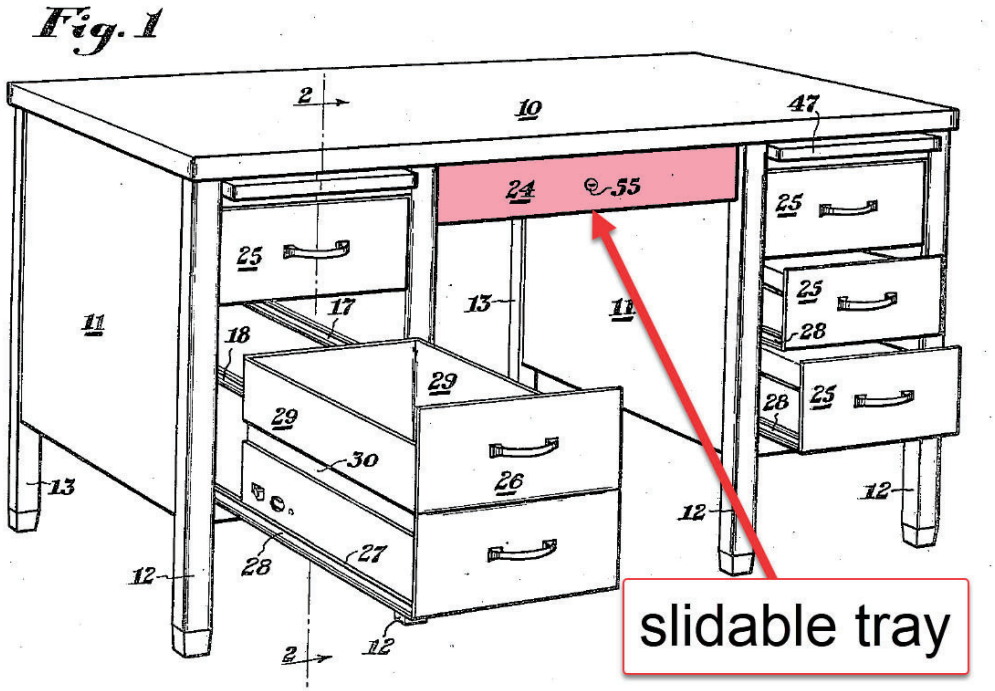

[146]

"The primary objects of the instant invention are to provide a desk having a plurality of box drawers and one or more vertical letter file drawers…" HJ Zottel 1:4-6

"The desk comprises a top 10 supported by drawer supporting pedestals 11 having front legs 12 and rear legs 13 attached thereto" HJ Zottel 1:47-50

"As best shown in Figure 1, the desk is provided with a center drawer 24 between the pedestals 11" HJ Zottel 2:9-11

As shown above, HJ Zottel discloses a slidable tray (drawer 24) which is mounted under the work surface platform (desk top 10). A POSITA will understand that drawers are a common feature that can be (and often is) added to any desk design, for instance the desktop shown in HJ Zottel. Thus, the addition of a drawer to mount under a desk top surface is not inventive in the slightest as this type of design has been well-known for well over 100 years (see for example US 1,508,259 to I.A. Stafford filed in 1919, or George Washington's desk which is over 200 years old and has drawers mounted under the desk surface[147]). Further, a POSITA will understand that drawers are commonly designed to slide into a stored

[146] HJ Zottel, Figure 1, annotated
[147] <https://emuseum.mountvernon.org/objects/414/tambour-writing-table-and-bookcase> Dec 19, 2024

position or out to an open position. For example, Figure 1 of HJ Zottel shows drawer 24 in a stored position and drawer 26 slid out into an open position. As the tray is mounted to the underside of the work surface platform, a POSITA will further understand that when open, the bottom surface of the tray (drawer 24) will be outward and lowered with respect to the work surface platform.

1c. a base configured to sit on an existing platform; and	**YES:** Huang in view of Clarke discloses a base configured to sit on an existing platform.

Clarke teaches a base configured to sit on an existing platform as shown below:

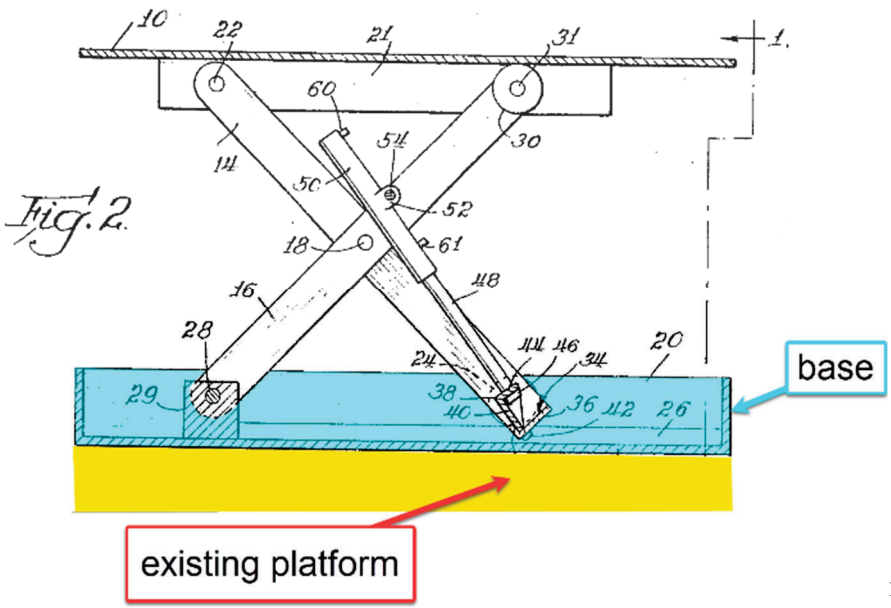

[148]

"Referring now more particularly to the drawings, the invention comprises a lift table having a top 10 and a base 12 connected by crossed scissors legs 14 and 16 at each side." Clarke 1:67-70

As shown, above, Clarke discloses a base which supports the Clarke mechanism on the floor, i.e. an existing platform. Whether the floor is a base floor or a floor several stories up, a POSITA will easily recognize that a floor is an existing platform. For example, the foundation of a house

[148] Clarke, Figure 2, Annotated

comports with the plain and ordinary meaning of "platform" which is "A horizontal surface raised above the level of the adjacent area."[149] As discussed previously, a POSITA would be motivated to combine the base of Clarke with the Huang mechanism as it provides a more evenly distributed load on the existing platform (i.e. the floor).

1d. a height adjustment mechanism connecting the work surface platform and the base, the height adjustment mechanism including:	**YES:** Huang in view of Clarke discloses a height adjustment mechanism connecting the work surface platform and the base.

The Huang mechanism uses a combination of a scissor linkage and a pressure bar to serve as a height adjustment mechanism. As discussed previously, a POSITA would be motivated to combine Huang with the base as disclosed by Clarke. In this combination, the height adjustment mechanism connects the work surface platform to the base.

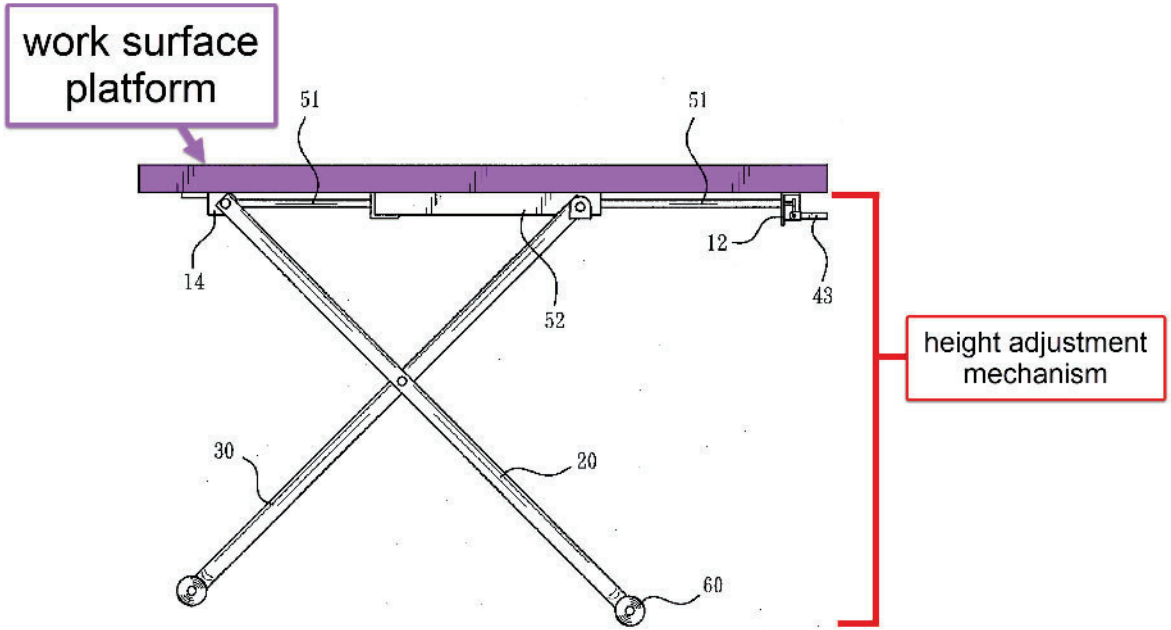

[150]

*"**A height-adjustable table** includes **a table board**, a first foot, a second foot, an air pressure bar and an assistant device. The **first foot** crossly and pivotally connects with the **second foot**, wherein one end of the first foot pivotally connects with a first fastener on the bottom side of the table*

[149] <https://www.ahdictionary.com/word/search.html?q=platform> accessed Dec 27, 2024
[150] Huang, Figure 5, Annotated

board, and one end of the second foot pivotally connects with a pivot joint. The assistant device is fixed between the first fastener and a second fastener, wherein one end of the air pressure bar is fixed on the second fastener while the other end fixed on the assistant device. Therefore, when the air pressure bar is operated, smooth sliding of the air pressure bar is provided, whereby the structural strength of the table is reinforced." Huang Abstract (emphasis added)

Clarke discloses a height adjustment mechanism and a base:

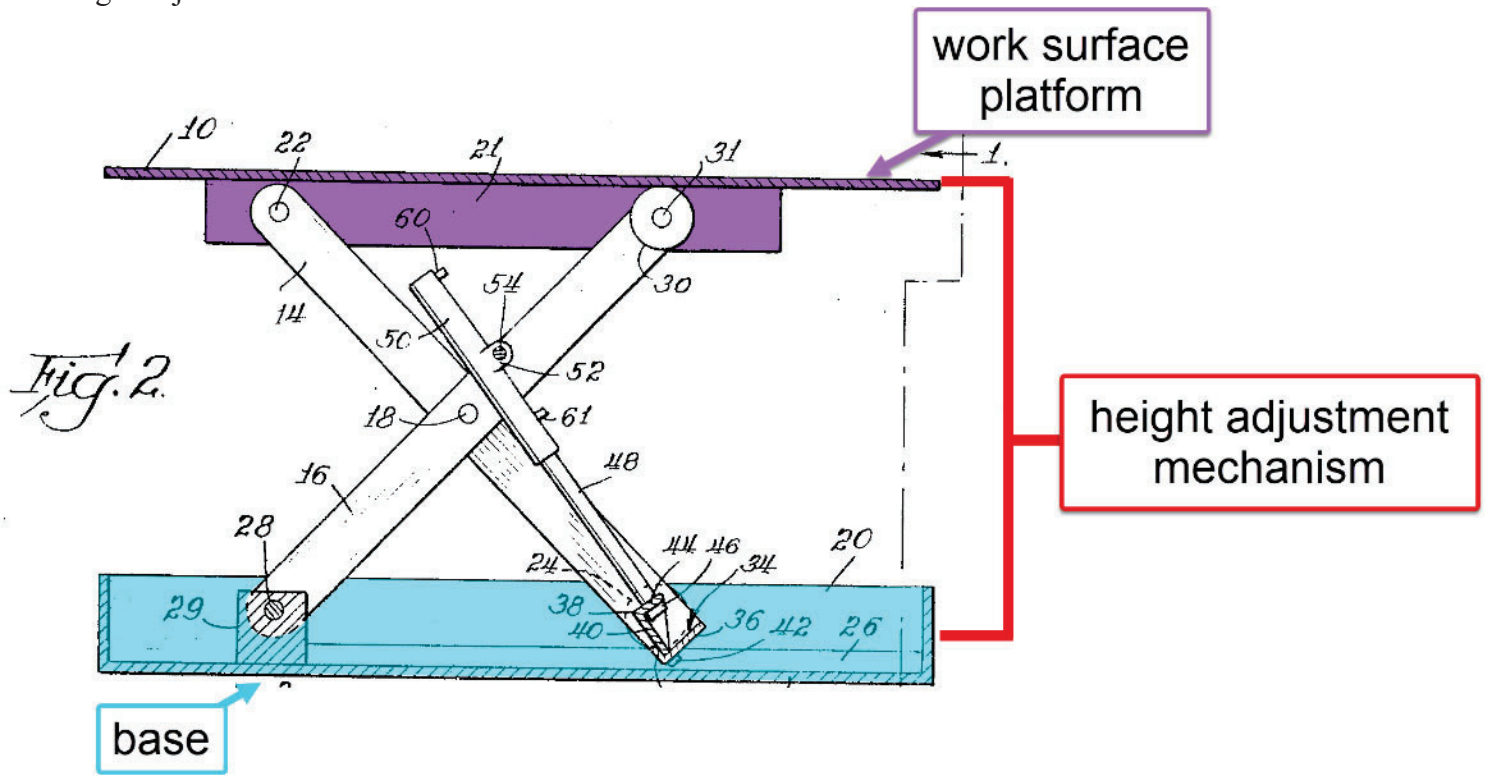

[151]

"This invention relates to the operation of a scissors lift in changing it from a down or closed position to up or open position. It is particularly employed in connection with lift tables and the like." Clarke 1:8-11

"Referring now more particularly to the drawings, the invention comprises a lift table having a top 10 and a base 12 connected by crossed scissors legs 14 and 16 at each side." Clarke 1:67-70

[151] Clarke, Figure 2, Annotated

As shown above, Huang in view of Clarke discloses a height adjustment mechanism that connects the work surface platform and the base. A POSITA will recognize that both Huang and Clarke use a scissor linkage in combination with a cylinder style force actuator and that the height adjustment mechanism of Clarke could be used in the Huang mechanism and vice versa.

1d1. a set of pivot arms that connect at a scissoring pivot point creating a scissoring motion when raising and lowering the work surface platform to various heights;	**YES:** Both Huang and Clarke have a set of pivot arms that connect at a scissoring pivot point creating a scissoring motion when raising and lowering the work surface platform to various heights.

The pivot arms below are part of the height adjustment mechanism:

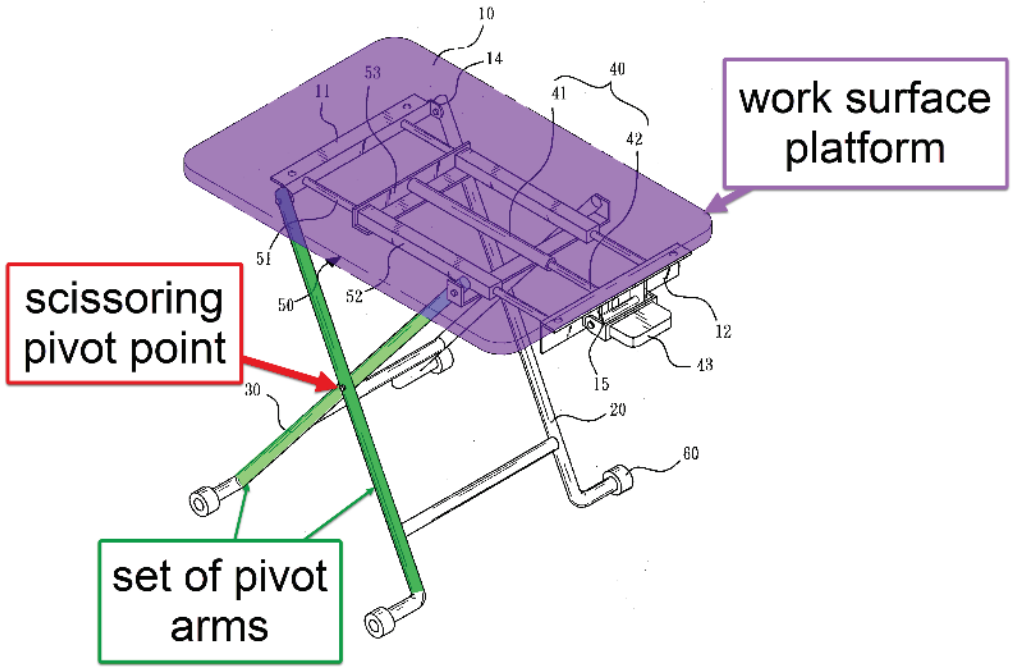

[152]

As shown above, Huang discloses a set of pivot arms that connect at a scissoring pivot point creating a scissoring motion when raising and lowering the work surface platform to various heights.

[152] Huang, Figure 3, Annotated

"Referring to FIGS. 1-3, an adjustable table with an assistant device in accordance with the present invention is shown. The adjustable table with an assistant device comprises a table board 10, a first foot 20, a second foot 30, an air pressure bar 40 and an assistant device 50, wherein the middle section of the first foot 20 and the second foot 30 are pivotally connected as a cross shape, with wheels 60 installed at the end of the first foot 20 and the second foot 30, respectively." Huang [0015]

"A height-adjustable table includes a table board, a first foot, a second foot, an air pressure bar and an assistant device. The first foot crossly and pivotally connects with the second foot, wherein one end of the first foot pivotally connects with a first fastener on the bottom side of the table board, and one end of the second foot pivotally connects with a pivot joint." Huang, Abstract

As shown in the citations above, the Huang mechanism has a set of pivot arms that connect at a scissoring point. These leg members form a scissor mechanism that adjusts the work surface platform to various heights.

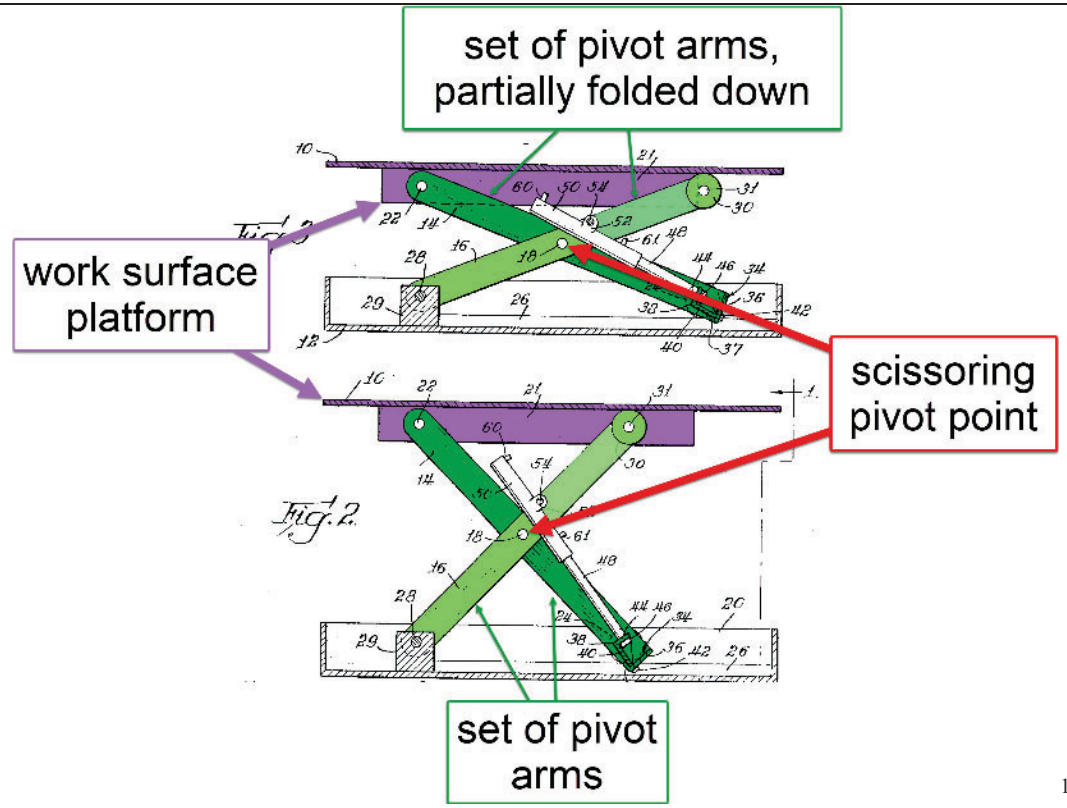

[153]

As shown above, Clarke also discloses a first set of pivot arms that connect at a scissoring pivot point creating a scissoring motion when raising and lowering the work surface platform to various heights.

"Referring now more particularly to the drawings, the invention comprises a lift table having a top 10 and a base 12 connected by crossed scissors legs 14 and 16 at each side. Legs 14 and 16 are pivotally connected at 18." Clarke 1:67-70

As shown in the citation above, the Clarke mechanism discloses a set of pivot arms (scissor legs 14 and 16). These are connected in a linkage making a scissor mechanism which is used to lift the table and to set it at various heights. As the lifting mechanism is moved up and down, the pivot arms move with a scissoring motion. Between Figures 2 and 3 the same mechanism is shown in two different states of lift (i.e. various

[153] Clarke, Figure 2 & 3, Annotated

heights). By comparing the positions of the pivot arms, it can clearly be seen that scissoring motion takes place to move the lift mechanism from the position shown in Figure 2 to the position shown in Figure 3. A POSITA would understand that scissor mechanisms are suitable for vertical lifting applications such as Huang and Clarke. Scissor mechanisms are well-known and are very commonly built with two sets of pivots arms.	
1d2. a base pivot point fixed relative to the base and connecting the base and the set of pivot arms;	**YES:** Huang in view of Clarke discloses a base pivot point fixed relative to the base and connecting the base and the set of pivot arms.

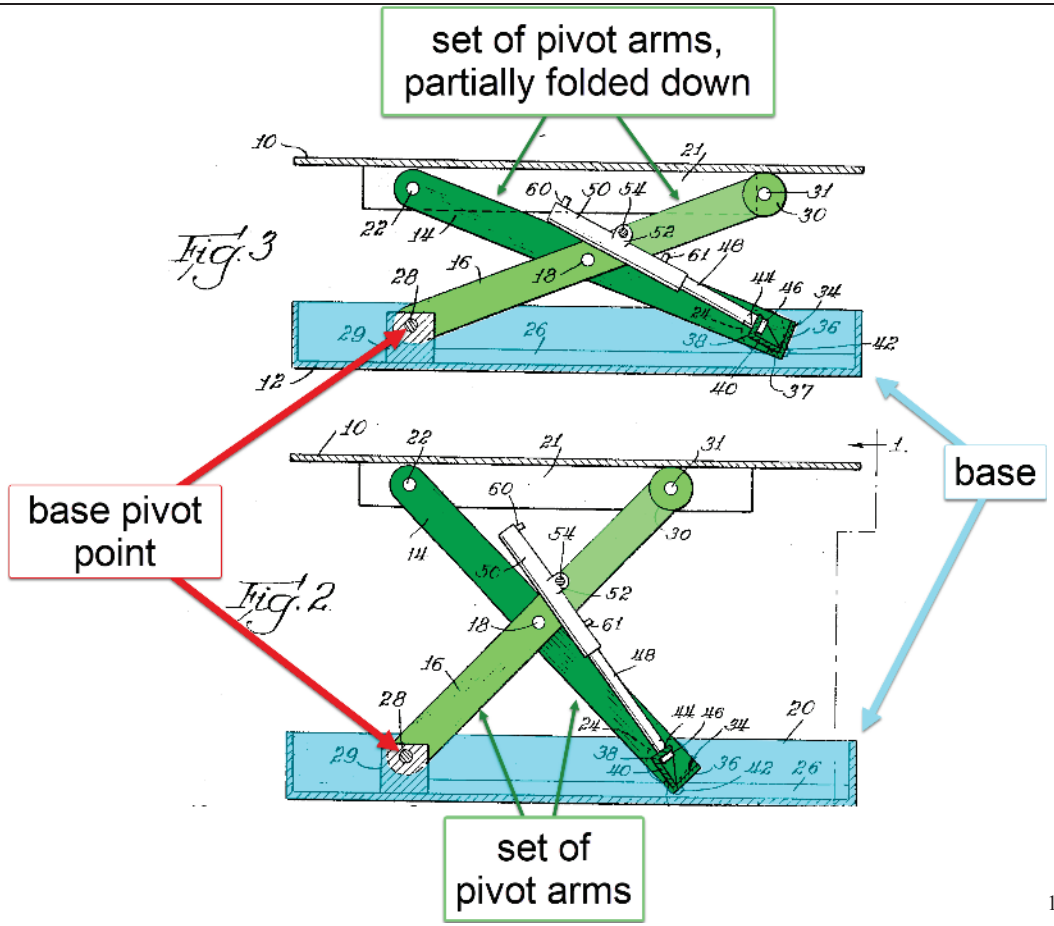

[154]

"Depending from the top, at each side, is a plate 21. A pivot 22 near one end of the plate 21 connects the upper end of the leg 14 to the plate. Leg 14 has a roller 24 rotatably mounted at the other end on shaft 25. Roller 24 rides on the upper surface of a strip 26 in the bottom of one side of the base 12. ***<u>One end of the other leg 16 has a pivot 28 connecting it to a support block 29</u>*** *directly below the pivot 22 for the leg 14. A roller 30 mounted on shaft 31 at the other end of leg 16 rides on the underside of the table top 10. The legs are closely folded together by the pivot 18 intermediate their ends, for parallel scissor action between the base and the top." Clarke 2:3-14 (emphasis added)*

[154] Clarke, Figure 2 & 3, Annotated

As shown above, Clarke discloses a base pivot point which connects the base and the set of pivot arms. A POSITA will understand that this is ubiquitous with scissor lift mechanism design. It is a required part of any scissor lift mechanism that is fixed to a base as it is one of the main supports for the entire lift mechanism. As discussed previously, a POSITA would be motivated to combine the base of Clarke with the Huang mechanism. Thus, Huang in view of Clarke would also include this pivot point as is so typical in design.

1d3. a platform pivot point fixed relative to the work surface platform and connecting the work surface platform and the set of pivot arms;	**YES:** Both Huang and Clarke have a platform pivot point fixed relative to the work surface platform and connecting the work surface platform and the set of pivot arms.

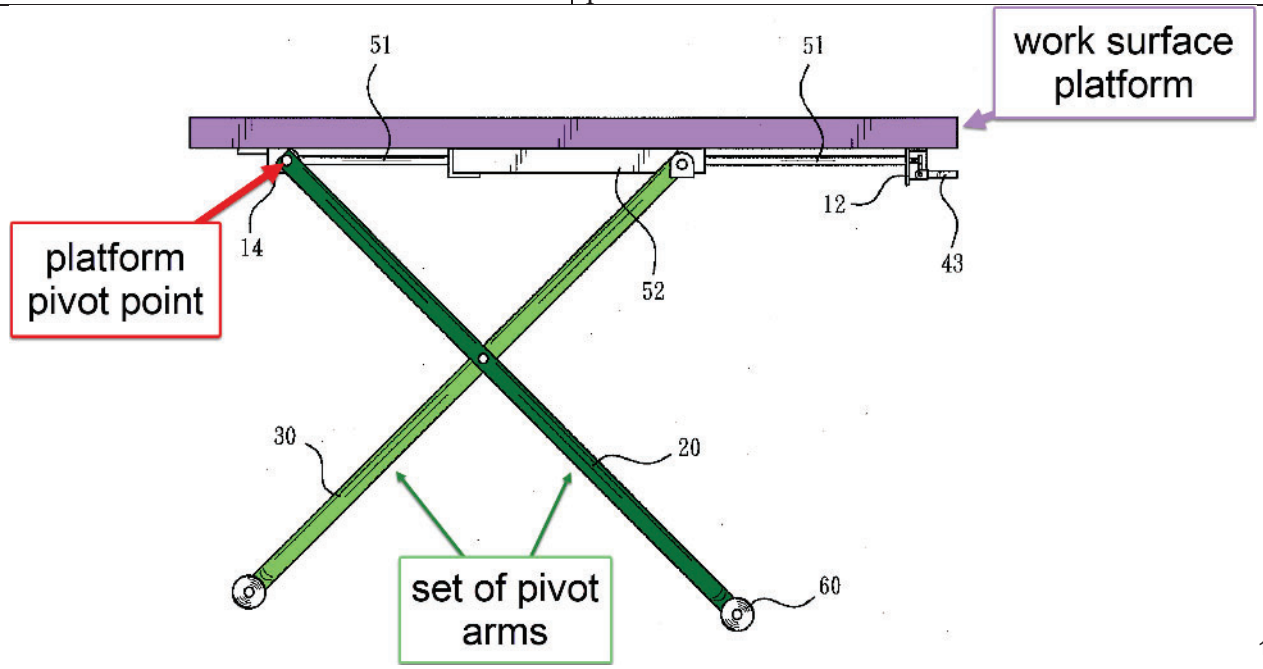

155

*"**Two lateral hole plates 14** are settled at both ends of the first fastener **11 to pivotally connect with the top end of the first foot 20**, and a couple of side connecting pieces 15 are settled on the outer-middle side of the second fastener." Huang [0016] (emphasis added)*

As shown in the figure and citation above, Huang discloses lateral hole plates 14 which is a platform pivot point fixed relative to the work surface platform which connects the work surface platform to a set of pivot arms. A POSITA will recognize that this design layout is universally used with

[155] Huang, Figure 5, Annotated

scissor lift mechanisms. It is ubiquitous and well-known and therefore not inventive. Huang simply provides yet one more example of this design layout.

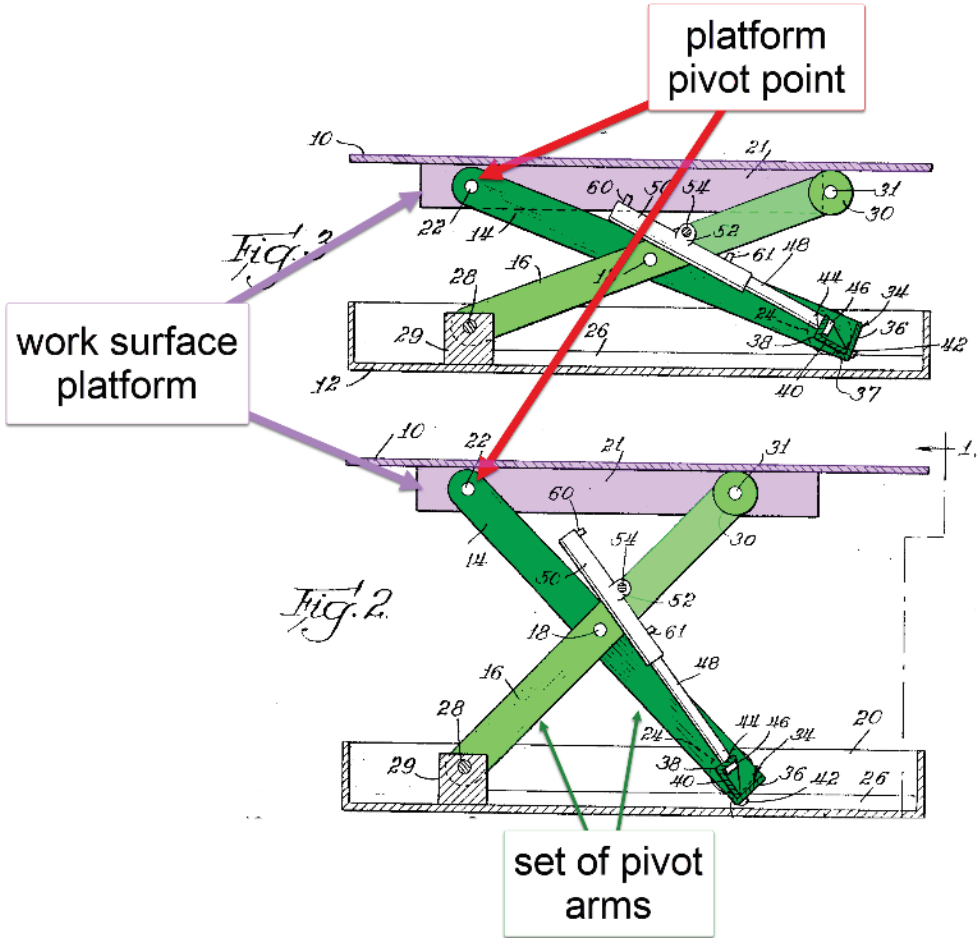

[156]

"Depending from the top, at each side, is a plate 21. ***<u>A pivot 22 near one end of the plate 21 connects the upper end of the leg 14 to the plate.</u>*** *" Clarke 2:3-4 (emphasis added)*

[156] Clarke, Figure 2 & 3, Annotated

As shown in the figure above, Clarke also discloses a platform pivot point as element 22 shown above. As discussed previously, this platform pivot point is ubiquitous in scissor lift linkage design. Huang and Clarke both discloses it and a POSITA would understand this pivot point exists merely by knowing that a scissor lift mechanism is involved in the design.	
1d4. a sliding mechanism on an end of an arm of the set of pivot arms between the end of the arm and either the work surface platform or the base; and	**YES:** Huang in view of Clark disclose a sliding mechanism on an end of an arm of the set of pivot arms between the end of the arm and either the work surface platform or the base.

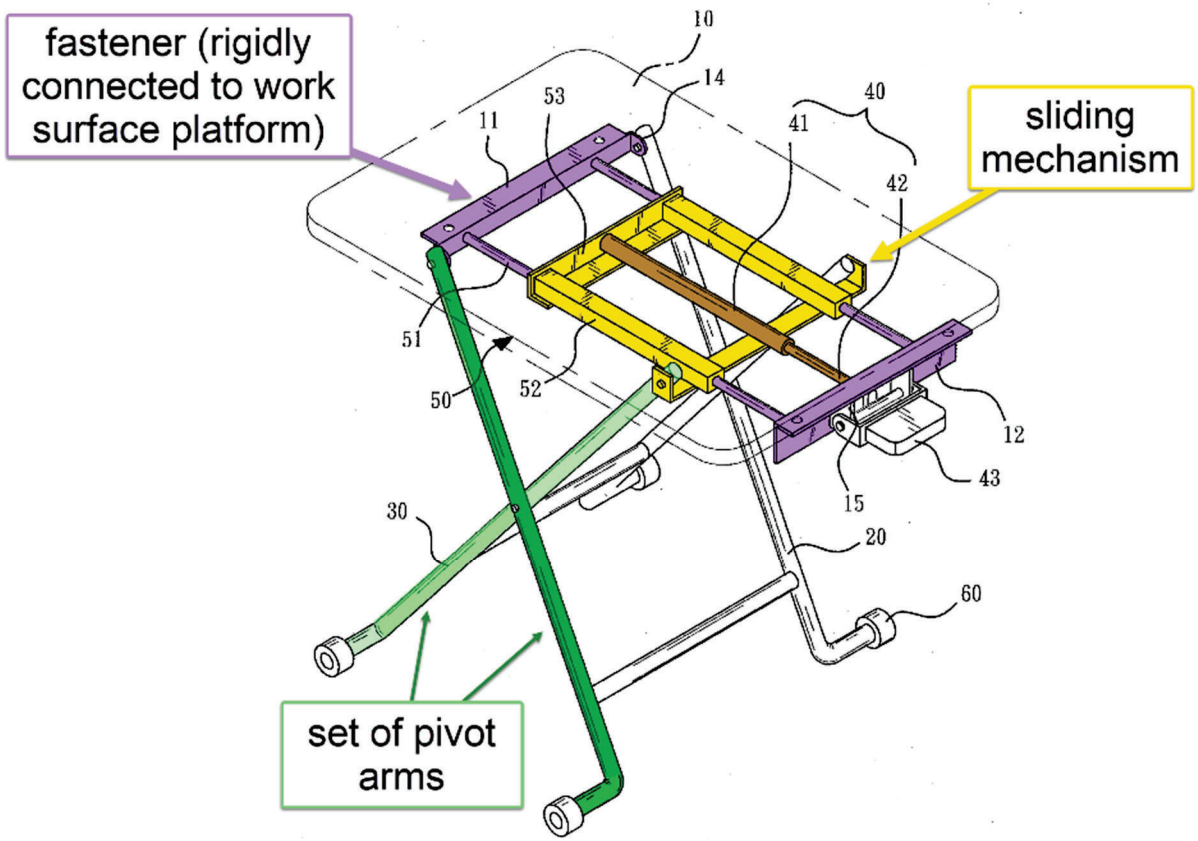

[157]

[157] Huang, Figure 3, Annotated

"The assistant device 50 possesses two parallel sliding Sticks 51, two sliding members 52 and one combining piece 53. The sliding sticks 51 are screwed between the first fastener 11 and the second fastener 12 by several second screws 54, whereby the whole structure of the table is reinforced and unlikely to be bent or deformed. The two sliding members 52 are slidely disposed around the two sliding sticks 51, and the combining piece 53 is positioned between the two sliding members 52, wherein one end of the rod body 41 is fixed on the combining piece 53 and between the two sliding members 52." Huang [0020]

As shown above, Huang discloses a sliding mechanism (shown in yellow), on the end of the set of pivot arms (item 30), between the end of the arm and the work surface platform.

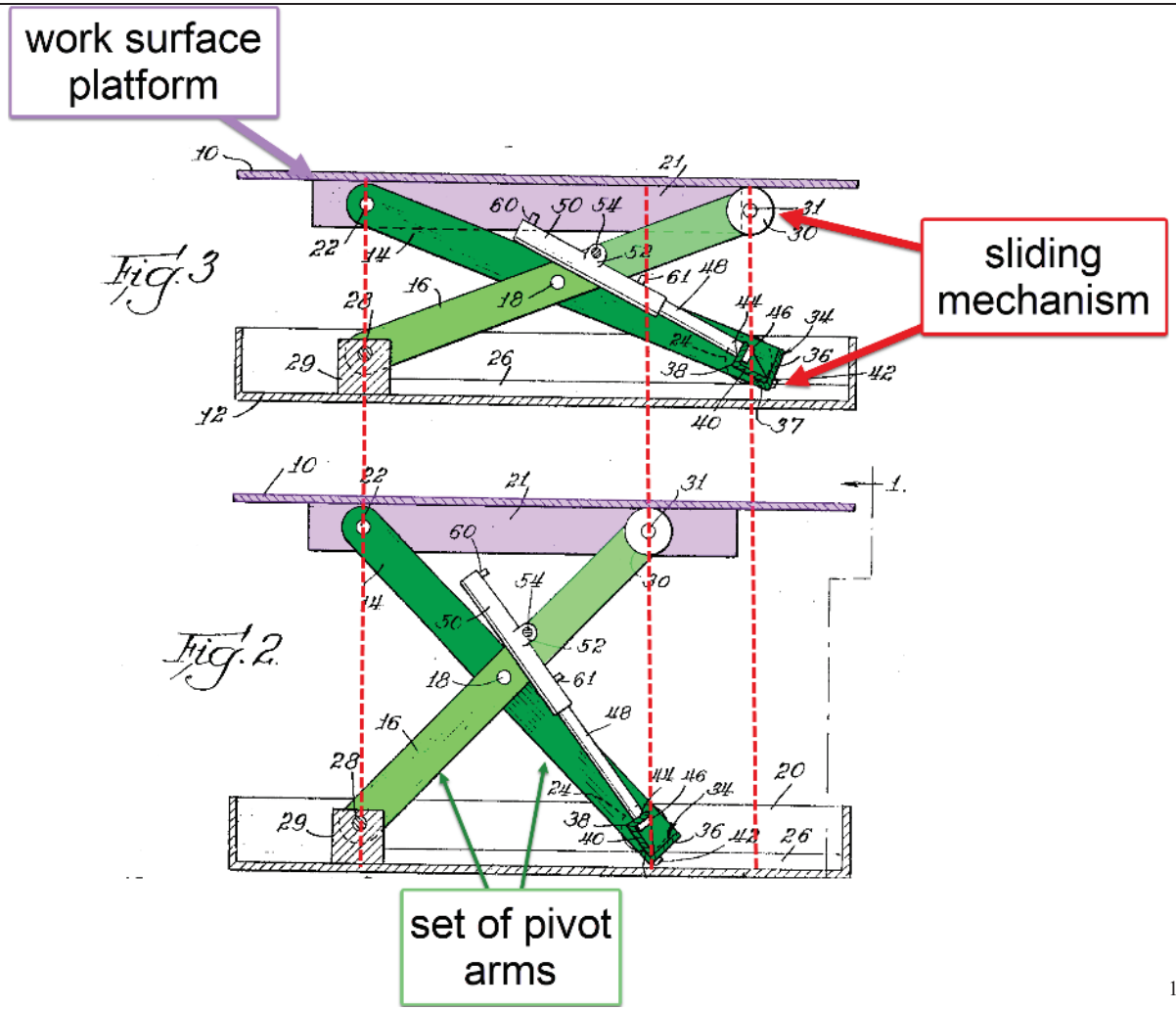

[158]

"Depending from the top, at each side, is a plate 21. A pivot 22 near one end of the plate 21 connects the upper end of the leg 14 to the plate. ***Leg 14 has a roller 24 rotatably mounted at the other end on shaft 25.*** *Roller 24 rides on the upper surface of a strip 26 in the bottom of one side of the base 12. One end of the other leg 16 has a pivot 28 connecting it to a support block 29 directly below the pivot 22 for the leg 14.* ***A roller 30***

[158] Clarke, Figure 2 & 3, Annotated

mounted on shaft 31 at the other end of leg 16 rides on the underside of the table top 10. *The legs are closely folded together by the pivot 18 intermediate their ends, for parallel scissor action between the base and the top." Clarke 23-14 (emphasis added)* As shown in the figure above, Clarke also discloses a sliding mechanism, a roller (item 30), on the end of a set of pivot arms (item 16) between the end of the pivot arm and the work surface platform. In addition, the set of rollers 24 and 30 allow for what the '926 patent considers to be sliding (i.e. translating) movement as is well-known and ubiquitous in the design of a common scissor lift linkage. It is kinematically necessary as a part of the design of a scissor lift linkage to allow these pivot points to move in this way. As will be shown later in the claim language, the term "sliding mechanism" must be interpreted to include rolling contact for example claim element 11a reads "wherein the sliding mechanism includes a wheel mounted on the end of the arm of the set of pivot arms." A POSITA would understand that a roller is used for rolling contact which is typically different from sliding contact. Nevertheless, a POSITA would understand that scissor linkages can are often are made with rolling OR sliding contact and they function just the same. The only difference is that sliding contact has slightly more drag than rolling contact. This drag is commonly minimized for example through the use of low friction wear pad materials. For example, the Pop Up brand Push Pro scissor lift (available at least as early as July 2014) uses a sliding contact at the movable pivot of a scissor lift as opposed to a roller.[159] Clarke discloses an extremely common arrangement where these pivot points translate both in the top and the bottom. That is to say between the scissor links and the work surface platform as well as between the scissor links and the base. A POSITA would be motivated to combine the sliding mechanisms as disclosed by Clarke in the combination of Huang in view of Clarke. The set of components that Huang uses to fill this function are unnecessarily complex and would be prone to binding in use. In contrast to this, a POSITA will recognize that the Clarke sliding mechanism is more typical of scissor lift design and would recognize that they are simple and reliable.	
1d5. a gas spring that assists in elevation of the work surface platform by applying a force to rotate one of the set of pivot arms as part of the scissoring motion,	**YES:** Huang discloses a gas spring that assists in the elevation of the work surface platform by applying a force to one of the set of pivot arms as part of the scissoring motion.

[159] See Operators Manual - Pop Up - Push Pro.pdf, cover page, and Figures 8.14 and 8.15

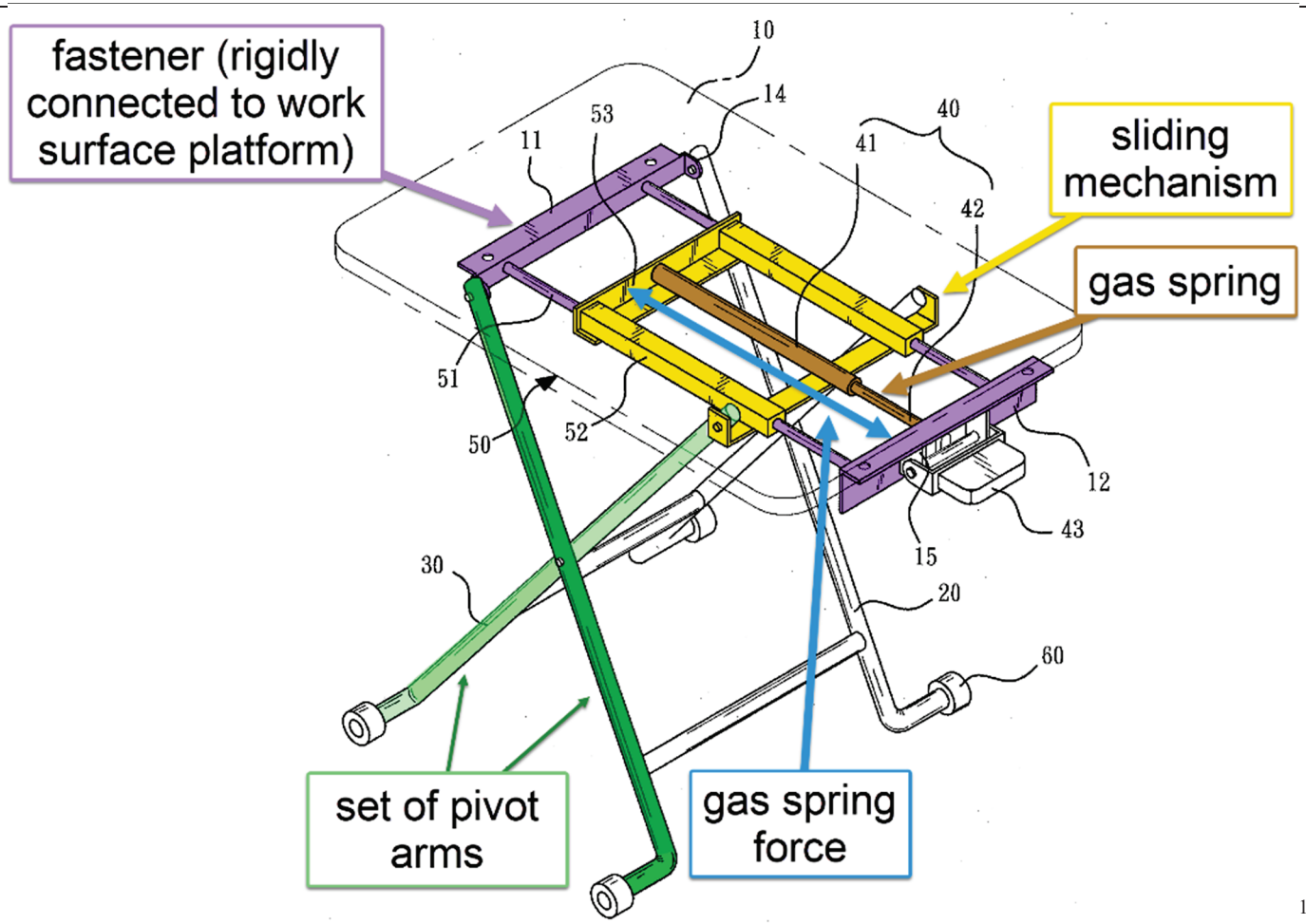

[160]

"To solve the abovementioned problems, the present invention provides an adjustable table with an assistant device, which utilizes an assistant device with a structure of air pressure bar in order to enable the air pressure bar to slide smoothly and reinforce the structural strength of the table." Huang [0006]

[160] Huang, Figure 3, Annotated

As shown in the figure and the citation above, Huang discloses an air pressure bar (item 41), which is a locking gas spring as discussed previously, that is used to facilitate the movement of the scissor linkage and therefore the work surface platform. As shown above, the gas-spring of Huang is connected between the work surface platform via the fastener (item 12) and the sliding mechanism (item 53) which is connected to the top of the pivot arms (item 30). As such, it applies force to the pivot arms as well as the work surface platform through the sliding mechanism as part of the scissoring motion.

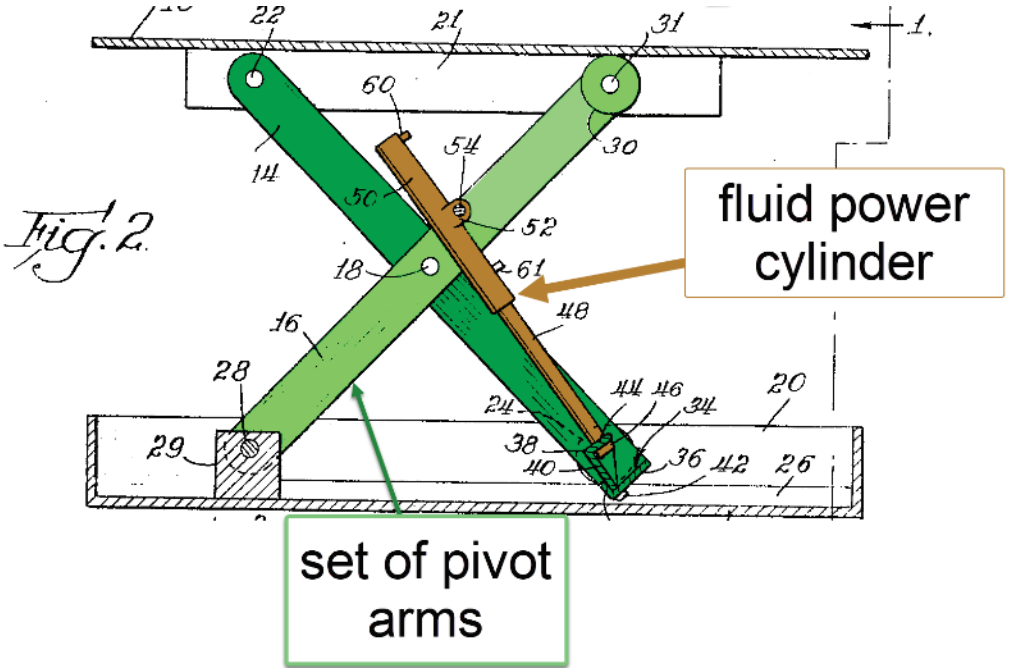

[161]

"Cylinder 50 has a side mounting plate 52 pivotally mounted on a rod 54. Rod 54 extends between the two opposite legs 16 to which it is connected. It is located at the side of the cylinder 50 opposite the pivotal mountings formed by studs 42. This rod 54 is at the upper side of the legs 16 above the common pivot 18 for the legs (FIGURE 4), and the mountings 52 extend downwardly. In the down position the cylinders will be entirely below the upper edges of the legs 16 to which they are connected." Clarke 2:32-41

*"To **supply air or fluid pressure**, each cylinder 50 is provided with an inlet 60 near its outer end to Which some suitable connection (not shown) is made. Adjacent the other end is a pipe 61 which may be used as an exhaust, or connected to the pressure source through a suitable valving arrangement if the cylinder is to be double acting." Clarke 2:67-72*

[161] Clarke, Figure 2, Annotated

Clarke discloses a cylinder which is operated by supplying air or fluid pressure. A POSITA would understand that a lockable gas-spring is a piston cylinder device. A POSITA would also understand that a hydraulic or pneumatic cylinder is a piston-cylinder device. Thus, the Clarke mechanism also shows a piston-cylinder device between the work surface platform and the pivoting links as is well-known in the typical and ordinary design of scissor lift mechanisms. A POSITA would understand that the fluid-power cylinder(s) of Clarke could be replaced with a gas spring. This would change the Clarke device from an actively driven scissor lift to an assisted but manually driven scissor lift, which would be desirable for lower load applications such as Huang utilizes. A POSITA would be motivated to use the locking gas spring as taught in Huang with the Clarke mechanism. Thus, when this combination is made, it will have a gas spring that assists in the elevation of the work surface platform by applying force to one of the set of pivot arms as part of the scissoring motion. This connection that makes the scissoring motion is made at pivot element 18 of Clarke as shown above.	
1d6. wherein one end of the gas spring is fixed to the work surface platform, wherein the gas spring acts as a locking device that holds the work surface platform at various vertical heights above the base, and	**YES:** Huang discloses that one end of the gas spring is fixed to the work surface platform, and wherein the gas spring acts as a locking device that holds the work surface platform at various vertical heights above the base.

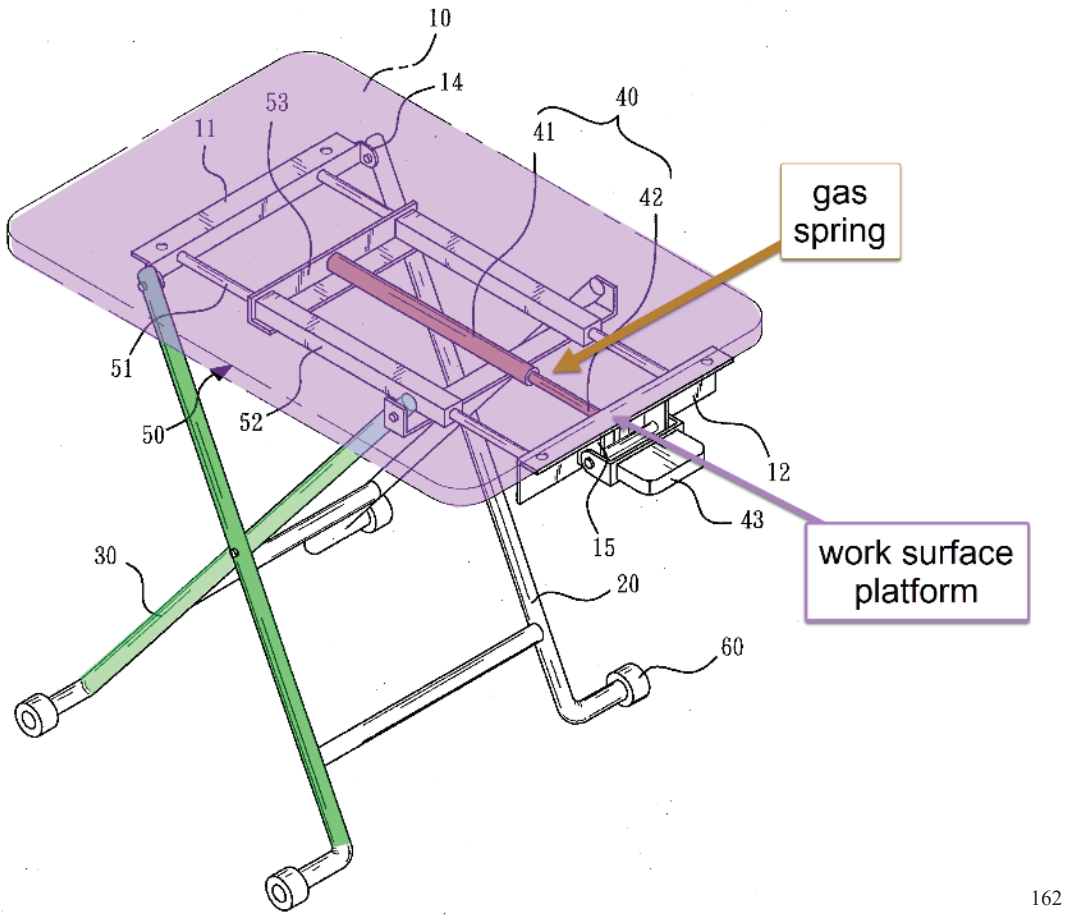

[162]

"The air pressure bar 40 is fixed between the first fastener 11 and the second fastener 12, and positioned at the middle of the pivot joint 31. The air pressure bar 40 possesses a rod body 41 and a stretching rod 42, wherein the end of the stretching rod 42 is fixed between two side connecting pieces 15 of the second fastener 12." Huang [0018]

[162] Huang, Figure 3, Annotated

"When the air pressure bar 40 is being operated, the sliding members 52 together with the rod body 41 of the air pressure bar 40 relatively displace against the sliding Sticks 51, thereby changing the angle included by the first foot 20 and the second foot 30, in order to adjust the height of the table." Huang [0021] As shown above, Huang discloses the use of an air pressure bar, or gas spring, to facilitate the movement of the scissor linkage. Specifically, the gas-spring cited is a locking gas-spring which as discussed previously is a well-known off-the-shelf component that any POSITA would be very familiar with. As Huang describes, the locking gas spring is used to set the work surface platform at various heights in ordinary usage of the Huang apparatus. A POSITA will understand that scissor lift mechanisms have a single degree of freedom and thus can be equivalently actuated by connecting an actuator between any two components that move relative to each other. For example, Huang as shown above connects a locking gas spring between the work surface platform and one of the arms of the set of pivot arms via the sliding mechanism as described previously. Clarke as shown in figure 2 connects the piston-cylinder style actuator between each of the arms in the set of pivot arms. A POSITA will easily recognize this as a design choice and further that a scissor lift with equivalent performance could just as easily be configured with the cylinder connected between the pivot arm and the work surface platform as taught in Huang. In addition to this though, a POSITA would recognize that it would be more advantageous to mount the locking gas spring with the actuated end in a fixed relationship with the work surface platform as taught by Huang. For example, a POSITA will recognize that the locking gas spring handle is most advantageously placed on the work surface platform, which provides greater ease of use for adjustment as opposed to connecting it between the legs. Combining the placement of the air spring of Huang in view of Clarke would yield this same convenience of handle position and act as a locking device for the Clarke mechanism.	
1d7. wherein the gas spring is under the work surface platform and above the existing platform.	**YES:** Huang in view of Clarke discloses that the gas spring is under the work surface platform and above the existing platform.

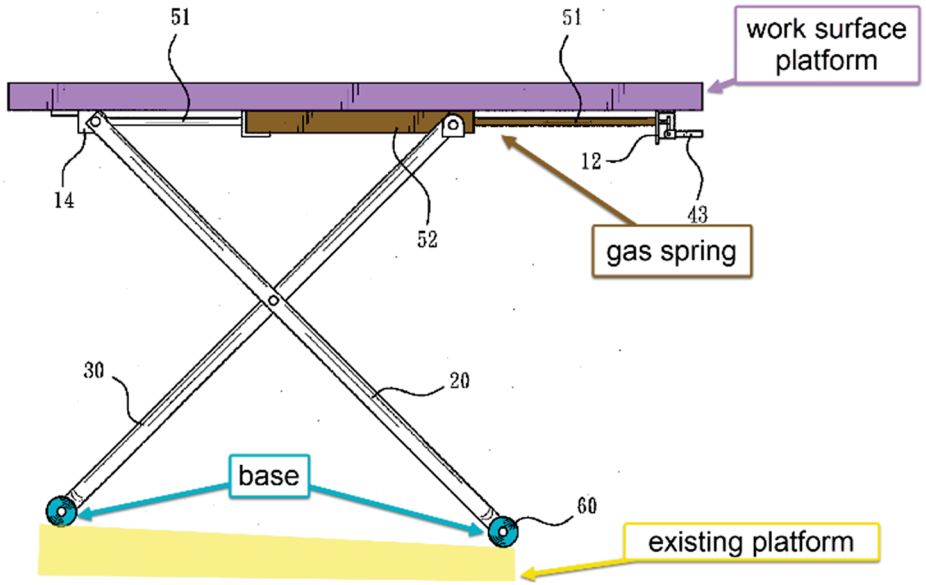

[163]

"For this objective, the present invention as an adjustable table with an assistant device comprises ***a table board, with a first fastener and a second fastener*** *on the* ***bottom side****; a first foot pivotally connecting to the first fastener, a second foot pivotally connecting to the first foot; a pivot joint pivotally connecting to one end of the second foot;* ***an air pressure bar is installed between the first fastener and the second fastener****" Huang 0007*

[163] Huang, Figure 5, Annotated

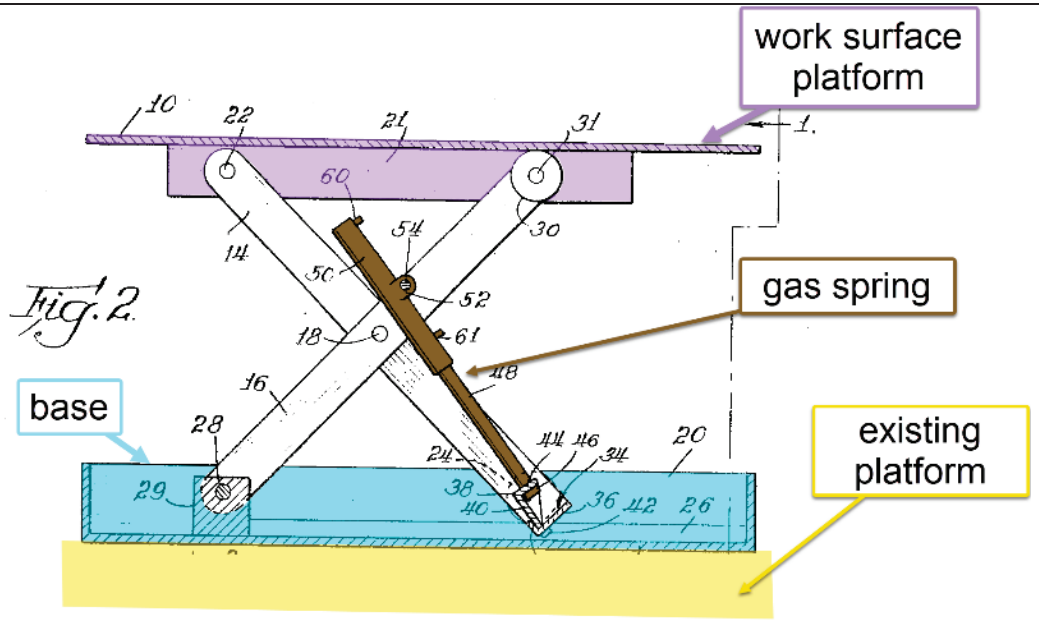

164

"Cylinder 50 has a side mounting plate 52 pivotally mounted on a rod 54. Rod 54 extends between the two opposite legs 16 to which it is connected. It is located at the side of the cylinder 50 opposite the pivotal mountings formed by studs 42. This rod 54 is at the upper side of the legs 16 above the common pivot 18 for the legs (FIGURE 4), and the mountings 52 extend downwardly. In the down position the cylinders will be entirely below the upper edges of the legs 16 to which they are connected." Clarke 2:32-41

As shown above, Huang and Clarke discloses a scissor lift platform with a gas spring. As can be seen in the figure above, the gas spring is located underneath the work surface platform. As can also be seen in the figure above, the gas spring is located above the existing platform.

2P. The desktop workspace of claim 1,	**YES:** As shown above, Huang in view of Clarke, and in further view of HJ Zottel discloses the desktop workspace of claim 1.
2a. wherein the slidable tray is mounted to an underside of the work surface platform with a slider such that the slidable tray is selectively positionable between the stored position under the	**YES:** Huang in view of Clarke and in further view of HJ Zottel discloses that the slidable tray is mounted to an underside of the work surface platform with a slider such that the slidable tray is selectively positionable between the

164 Clarke, Figure 2, Annotated

work surface platform and the extended position that is outward and lowered with respect to the work surface platform,	stored position under the work surface platform and the extended position that is outward and lowered with respect to the work surface platform.

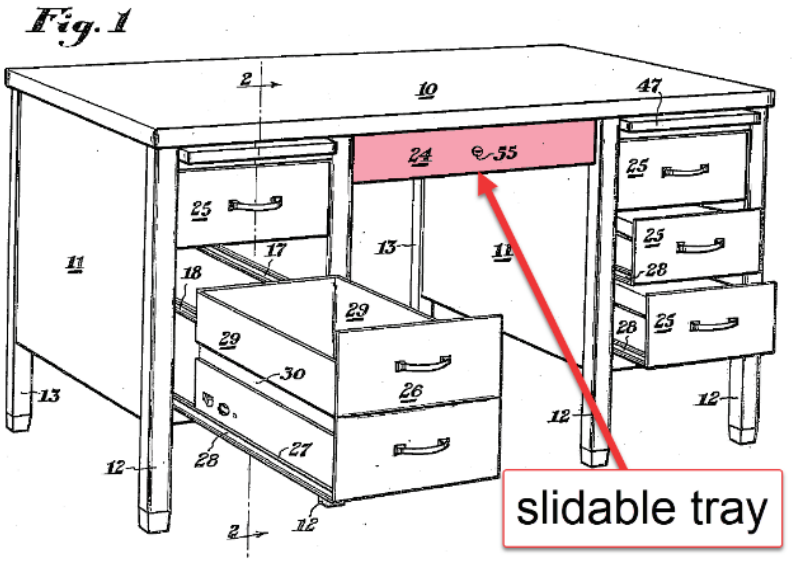

[165]

"The primary objects of the instant invention are to provide a desk having a plurality of box drawers and one or more vertical letter file drawers…" HJ Zottel 1:4-6

"The desk comprises a top 10 supported by drawer supporting pedestals 11 having front legs 12 and rear legs 13 attached thereto" HJ Zottel 1:47-50

"As best shown in Figure 1, the desk is provided with a center drawer 24 between the pedestals 11" HJ Zottel 2:9-11

As shown above, HJ Zottel discloses a slidable tray (drawer 24) which is mounted under the work surface platform (desk top 10). As discussed previously, when combining the teachigns of HJ Zottel with Huang in view of Clarke, a POSITA will be motivated to use a top-mount drawer style. This is because that is the only reasonable design choice for a POSITA to make with this particular arrangmenet as previously discussed. More generally, drawer mounting style is merely design choice. They can generally be on the bottom, on the side, or on the top with respect to the drawer. For example, US 5,294,087 to Drabczyk discloses an under-desk slider tray wherein the sliders mount directly to bottom of the desk top surface.

[165] HJ Zottel Figure 1, annotated

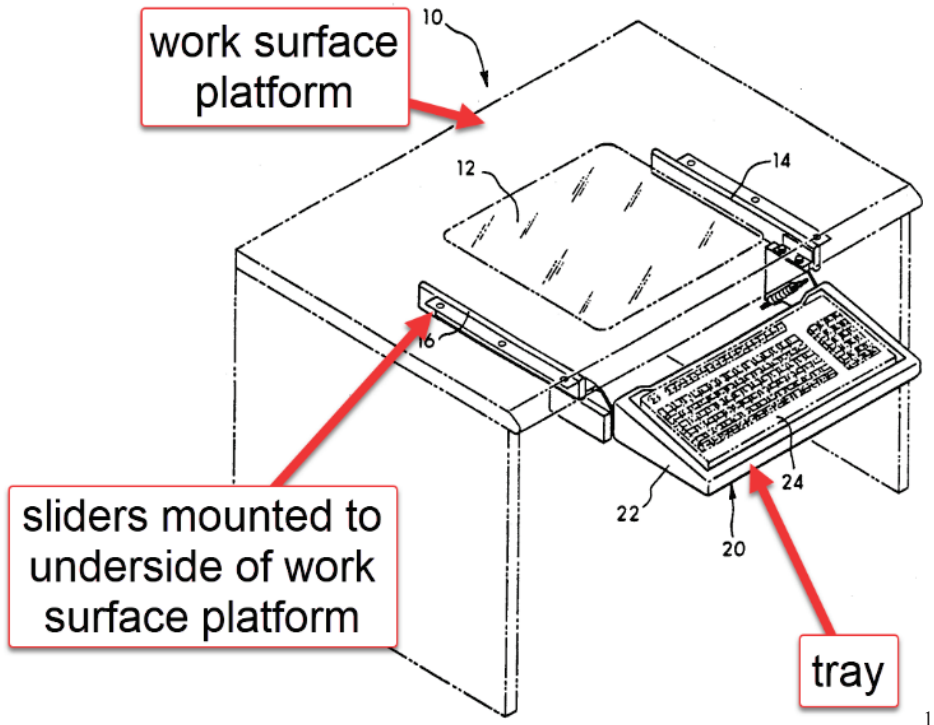

[166]

"Keyboard holder 20 is secured to workstation 10 to slide from an out of the way position beneath the top of workstation 10 to a working position as shown in FIG. 1. Keyboard holder 20, shown in FIG. 1, includes a molded plastic tray 22, which holds most types and sizes of keyboards 24." Drabczyk 3:36-41

With or without the teachings of Drabczyk, the mounting of slides for drawers is so well-known that a POSITA will recognize the various ways this can be accomplished. Drawers have been known at least since the mid 1600's[167] and the various permutations and mounting styles are well known. A POSITA will further understand that drawers are a common feature that can be (and often is) added to any desk design, for instance the desktop shown in HJ Zottel. Thus, the addition of a drawer to mount under a desk top surface is not inventive in the slightest as this type of design has been well known at least for nearly the last 100 years, as demonstrated by HJ Zottel. Further, a POSITA will understand that drawers are commonly designed to slide in to a stored position or out into a open position. For example, Figure 1 of HJ Zottel shows drawer 24 in a stored

[166] Drabczyk Figure 1, annotated
[167] <https://www.penderynantiques.co.uk/the-history-of-the-chest-of-drawer/> accessed Dec 20, 2024

position and drawer 26 slid out into an open position. As the tray is mounted to the underside of the work surface platform, a POSITA will further understand that when open, the bottom surface of the tray (drawer 24) will be outward and lowered with respect to the work surface platform.	
2b. wherein the slider includes a channel offset from the underside of the work surface platform, forming a gap between the slidable tray and the underside of the work surface platform.	**YES:** Huang in view of Clarke and in further view of HJ Zottel discloses that the slider includes a channel offset from the underside of the work surface platform, forming a gap between the slidable tray and the underside of the work surface platform.

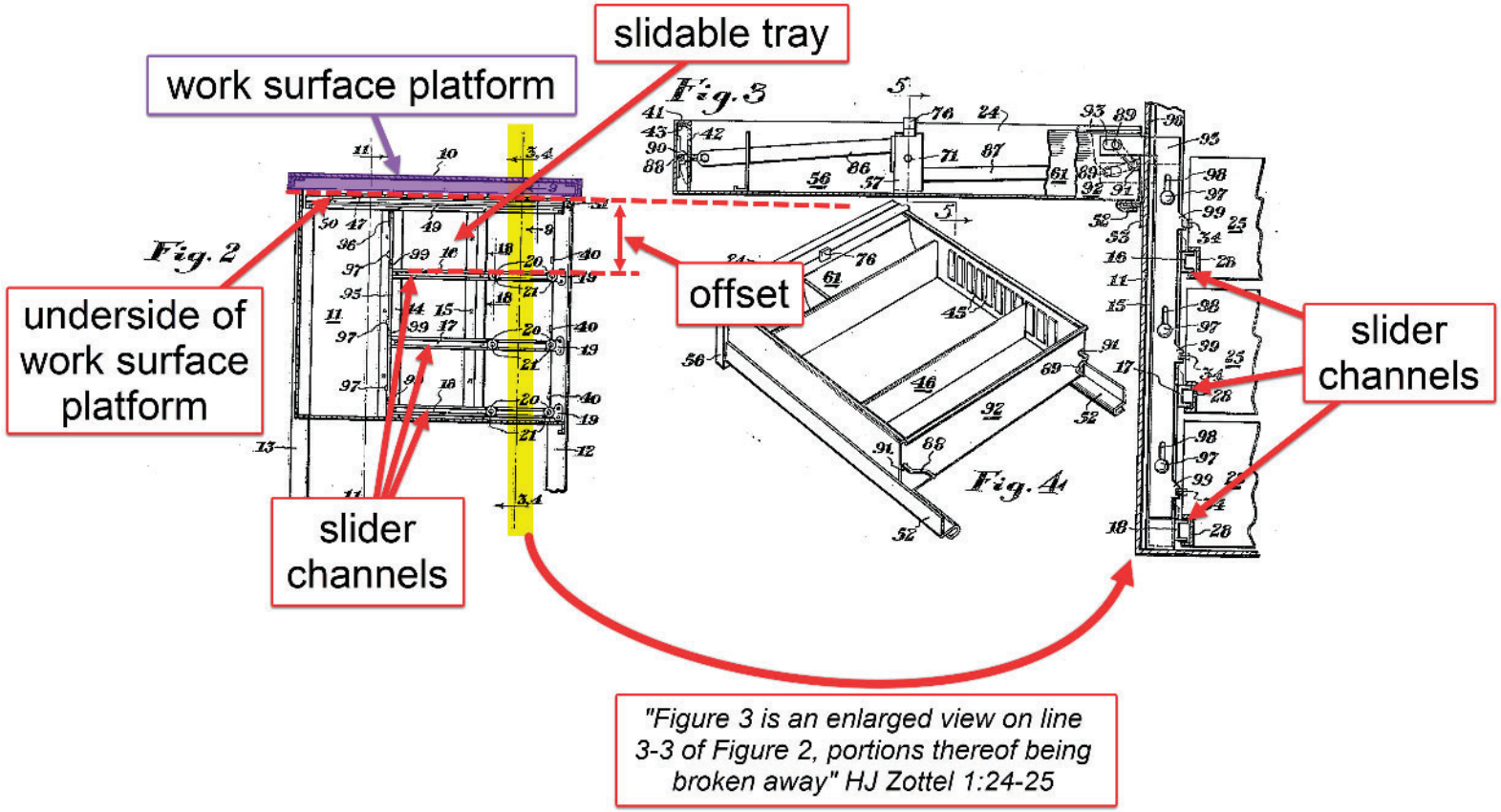

[168]

[168] HJ Zottel, Figures 2, 3, and 4, combined and annotated

"Each drawer 25 and 26 is provded with a recess 27 along eah of its lower side edges and channel runners 28 are secured as by spot welding within each recess 27. The runners 28 of each drawer slidably engage a pair of drawer guides 16, 17 or 18 to thus slidably mount each drawer within a pedestal" HJ Zottel 2: 14-20

As shown above, HJ Zottel includes multiple channels (channel runners 28) that are offset from the underside of the work surface platform, forming a gap between the slidable tray and the underside of the work surface platform. As discussed previously, a POSITA will understand the well-known options and permutations of drawer designs and mounting. This includes, for example, mouting on the bottom, the side, or the top of the drawer. As discussed previously, a POSITA will be motivated to use a top-mounted drawer when adding the teachings of HJ Zottel to Huang in view of Clarke. When this is done, the channel runners as disclosed by HJ Zottel will be located more towards the top of the drawer as opposed to the bottom.

In addition to this, top-mounted drawers were well known; an example of which is shown in Drabczyk. In particular, Drabczyk Figure 2 shows that there is a channel offset from the underside of the work surface platform.

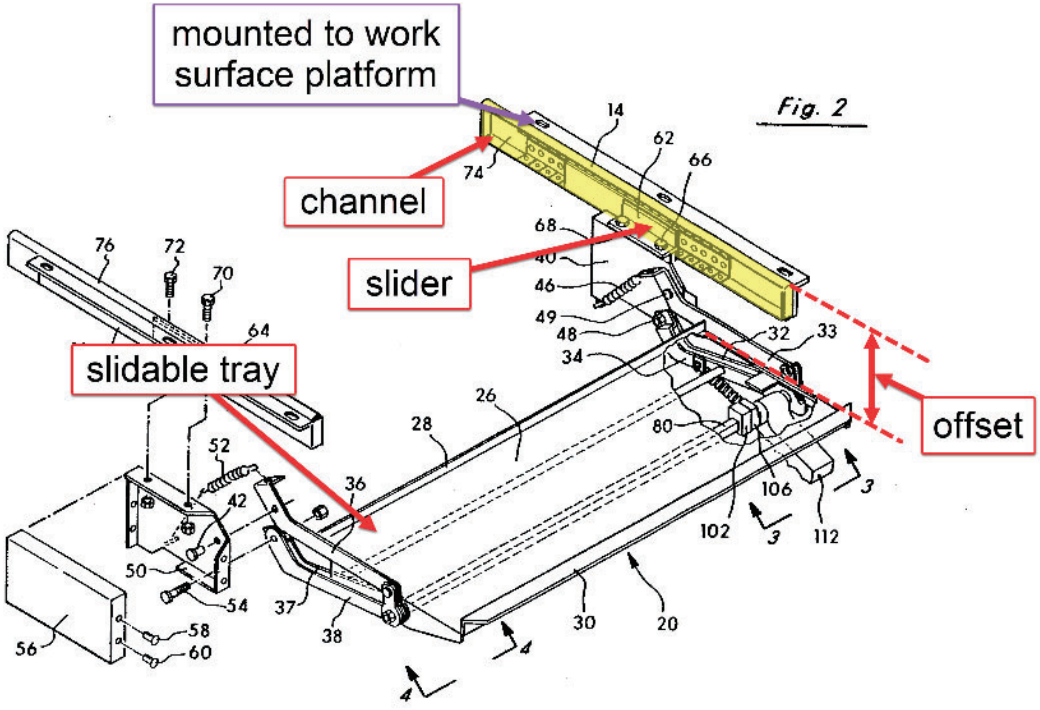

[169]

[169] Drabczyk Figure 2, annotated

"Keyboard holder 20 is secured to workstation 10 to slide from an out of the way position beneath the top of workstation 10 to a working position as shown in FIG. 1. Keyboard holder 20, shown in FIG. 1, includes a molded plastic tray 22, which holds most types and sizes of keyboards 24." Drabczyk 3:36-41

"Mounting plates 40, 42 are affixed to slide brackets 62, 64, respectively by bolts 66-72. Slide brackets 62, 64 slide within extendible tracks 74, 76 on mounting brackets 14, 16. ***The design and operation of slide brackets 62, 64 and mounting brackets 14, 16 are conventional in design and are not discussed in any further detail.*** *Thus, support tray 26, along with keyboard tray 22 and keybaord 24 are movable from an out of the way position beneath the upper surface of workstation 10 to a working position shown in FIG. 1." Drabczyk 3:65-4:6 (emphasis added)*

As shown above, Drabczyk demonstrates a well-known slidable tray arrangement wherein the slider has a channel which is offset from the underside of the work surface platform. This offset forms a gap between the slidable tray and the underside of the work surface platform. Further, I note that Drabczyk describes this arrangemnt as conventional in design, i.e. that it is well-known. Thus, as discussed before, a POSITA would understand with or without Drabczyk that drawers and slidable trays are reguarly mounted and arranged in this way.

3P. The desktop workspace of claim 2,	**YES:** As shown above, Huang in view of Clarke, and in further view of HJ Zottel and the knowledge of a POSITA discloses the desktop workspace of claim 2.
3a. further comprising a bracket fixed to the underside of the work surface platform, wherein the channel is mounted to the bracket such that the channel is offset from the underside of the work surface platform.	**YES:** Huang in view of Clarke and in further view of HJ Zottel and the knowledge of a POSITA, discloses comprising a bracket fixed to the underside of the work surface platform, wherein the channel is mounted to the bracket such that the channel is offset from the underside of the work surface platform.

As discsused previously, a POSITA will understand the ordinary and customary ways in which drawers are mounted include mounting on the bottom, the side, or the top. As discussed previously, when combining the teachigns of HJ Zottel with Huang in view of Clarke, a POISTA will be motivated to use a top-mounted drawer. When mounted to the top a POSITA will understand that this arrangement will generally include a bracket that mounts the slider channel to the underside of the work surface platform. This is a natural result in the ordinary course of well-known drawer mounting design.

In addition to this, as discussed previously, top-mounted drawers were well known; an example of which is shown in Drabczyk. In particular, Drabczyk Figure 2 shows that there is a channel offset from the underside of the work surface platform. Specifically, Drabczyk shows a bracket fixed to the underside of the work surface platform and a channel that is mounted to the bracket as shown below:

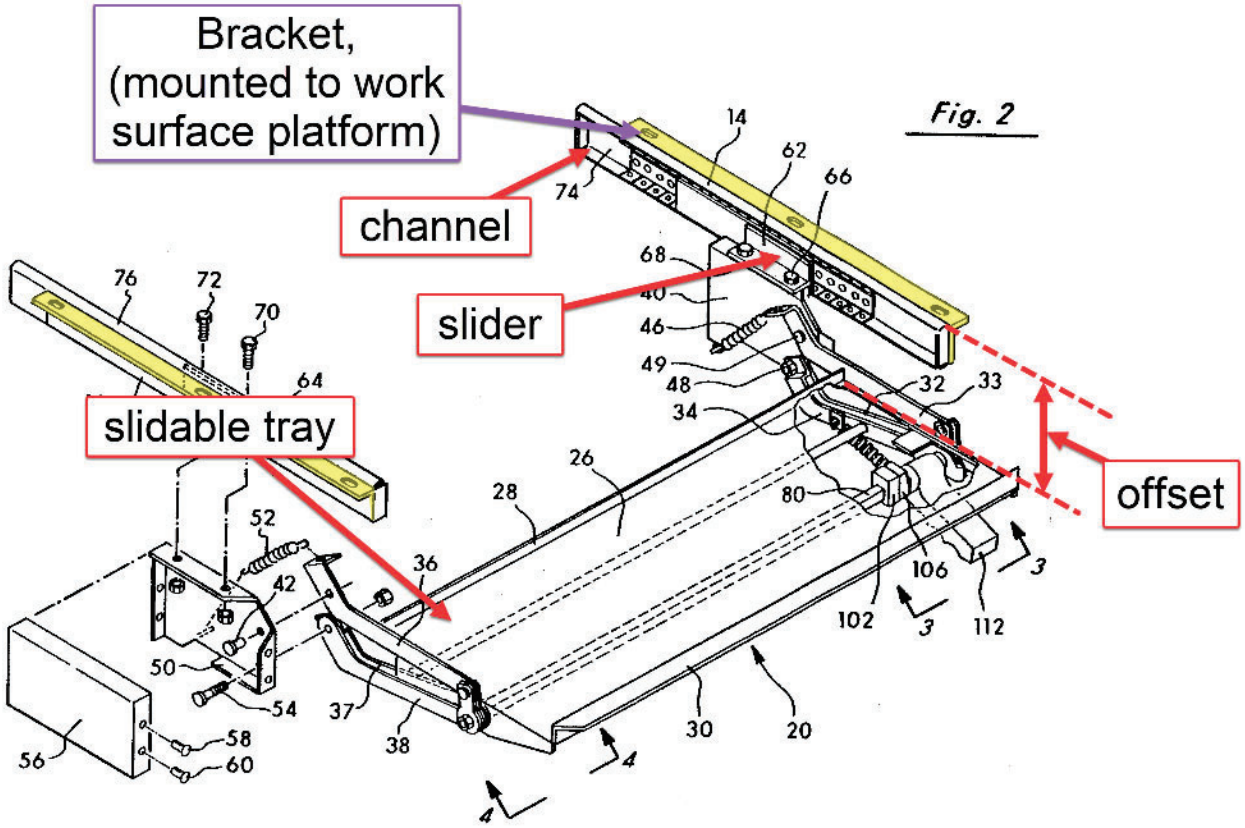

170

"Keyboard holder 20 is secured to workstation 10 to slide from an out of the way position beneath the top of workstation 10 to a working position as shown in FIG. 1. Keyboard holder 20, shown in FIG. 1, includes a molded plastic tray 22, which holds most types and sizes of keyboards 24." Drabczyk 3:36-41

"Mounting plates 40, 42 are affixed to slide brackets 62, 64, respectively by bolts 66-72. Slide brackets 62, 64 slide within extendible tracks 74, 76 on mounting brackets 14, 16. ***The design and operation of slide brackets 62, 64 and mounting brackets 14, 16 are conventional in design and are not discussed in any further detail.*** *Thus, support tray 26, along with keyboard tray 22 and keybaord 24 are movable from an out of the way position beneath the upper surface of workstation 10 to a working position shown in FIG. 1." Drabczyk 3:65-4:6 (emphasis added)*

[170] Drabczyk Figure 2, annotated

As shown above, Drabczyk demonstrates a well-known slidable tray arrangement wherein the slider has a bracket that is fixed to the underside of the work surface platform and fixed to the slider mechanism. This positions the slider channel to be offset from the underside of the work surface platform. This offset forms a gap between the slidable tray and the underside of the work surface platform. Further, I note that Drabczyk describes this arrangemnt as conventional in design, i.e. that it is well-known. Thus, as discussed before, a POSITA would understand with or without Drabczyk that drawers and slidable trays are reguarly mounted and arranged in this way and would have been motivated to do so.	
4P. The desktop workspace of claim 1,	**YES:** As shown above, Huang in view of Clarke, and in further view of HJ Zottel discloses the desktop workspace of claim 1.
4a. wherein the set of pivot arms is a first set of pivot arms, the desktop workspace further comprising:	**YES:** Both Huang and Clarke disclose a set of pivot arms that is a first set of pivots arms.
The pivot arms below are part of the height adjustment mechanism:	

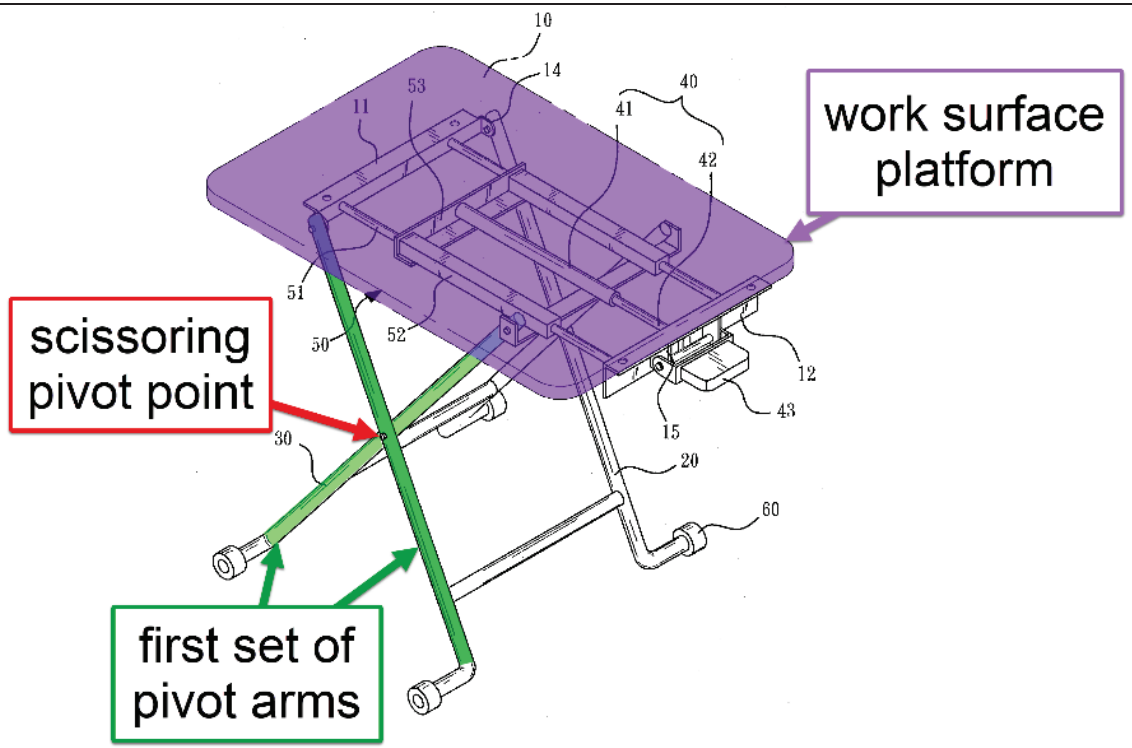

[171]

As shown above, Huang has a first set of pivot arms. These legs connect at a scissoring point. Together, these legs and pin create a scissoring motion when raising and lowering the work surface to various heights.

"Referring to FIGS. 1-3, an adjustable table with an assistant device in accordance with the present invention is shown. The adjustable table with an assistant device comprises a table board 10, a first foot 20, a second foot 30, an air pressure bar 40 and an assistant device 50, wherein the middle section of the first foot 20 and the second foot 30 are pivotally connected as a cross shape, with wheels 60 installed at the end of the first foot 20 and the second foot 30, respectively." Huang 0015

"A height-adjustable table includes a table board, a first foot, a second foot, an air pressure bar and an assistant device. The first foot crossly and pivotally connects with the second foot, wherein one end of the first foot pivotally connects with a first fastener on the bottom side of the table board, and one end of the second foot pivotally connects with a pivot joint." Huang, Abstract

[171] Huang, Figure 3, Annotated

As shown in the citations above, the Huang mechanism has a first set of pivot arms that connect at a scissoring point. These leg members form a scissor mechanism that adjusts the work surface platform to various heights.

Clarke also discloses a first set of pivot arms that connect at a scissoring pivot point creating a scissoring motion when raising and lowering the works surface platform to various heights. For example, the pivots arms and scissoring pivot point are shown below:

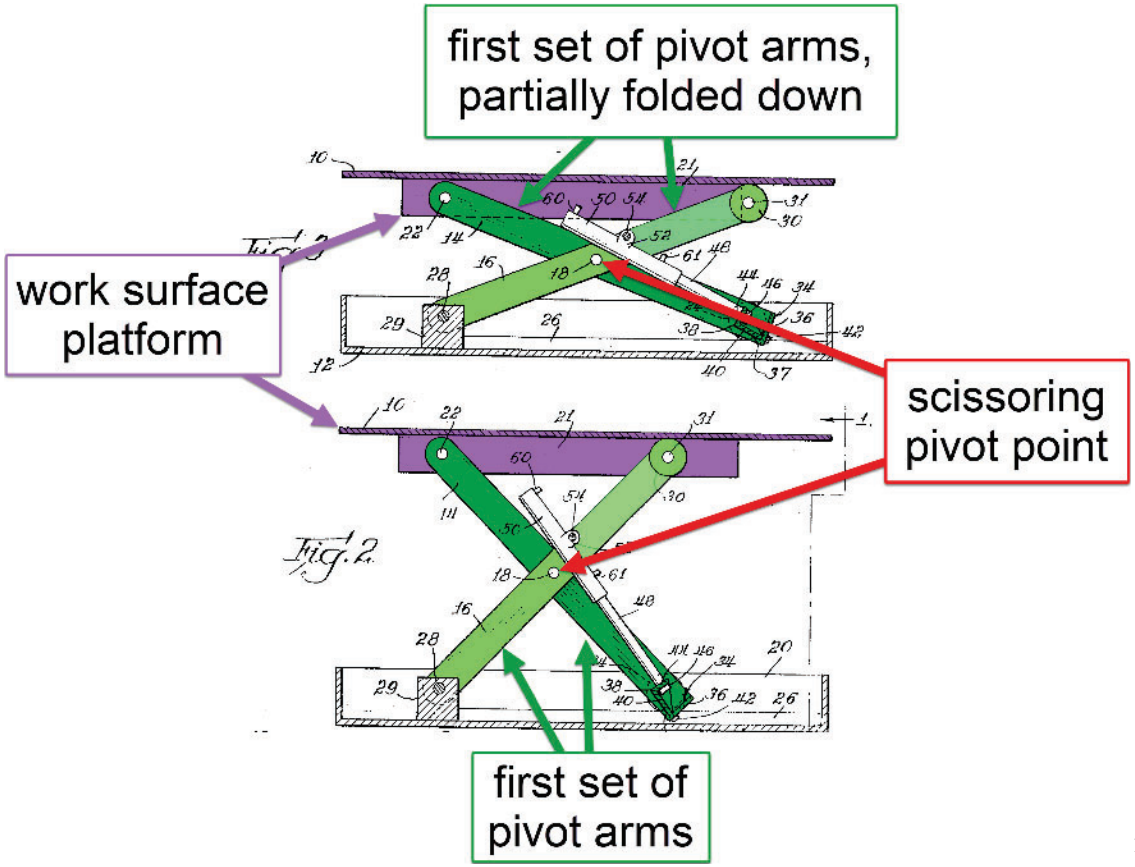

[172]

[172] Clarke, Figure 2 & 3, Annotated

"Referring now more particularly to the drawings, the invention comprises a lift table having a top 10 and a base 12 connected by crossed scissors legs 14 and 16 at each side. Legs 14 and 16 are pivotally connected at 18." Clarke 1:67-70 As shown above, Clarke discloses a first set of pivot arms. These are connected in a linkage making a scissor mechanism which is used to lift the table and to set it at various heights. As the lifting mechanism is moved up and down, the pivot arms move with a scissoring motion. Between Figures 2 and 3 the same mechanism is shown in two different states of lift. By comparing the positions of the pivot arms, it can clearly be seen that scissoring motion takes place to move the lift mechanism from the position shown in Figure 2 to the position shown in Figure 3. A POSITA would understand that scissor mechanisms are suitable for vertical lifting applications such as Huang and Clarke. Scissor mechanisms are well-known and are very commonly built with two sets of pivots arms.	
4a1. a second set of pivot arms; and	**YES:** Huang discloses a second set of pivot arms.

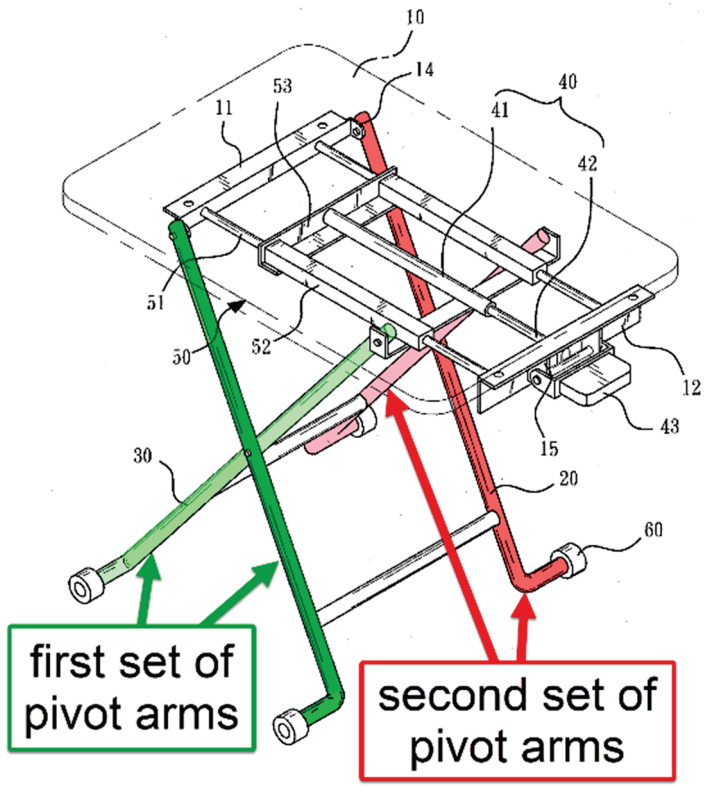

[173]

"For this objective, the present invention as an adjustable table with an assistant device comprises a table board, with a first fastener and a second fastener on the bottom side; a first foot pivotally connecting to the first fastener, a second foot pivotally connecting to the first foot; a pivot joint pivotally connecting to one end of the second foot" Huang [0007]

As shown above Huang has a first and a second set of pivot arms. They are connected to each other and move in a scissor-like fashion. A POSITA will understand that this is a scissor lift mechanism of typical and ordinary design. A POSITA will further understand and be familiar with the fact that scissor lift mechanisms such as a common scissor lift machine or even this small table as disclosed by Huang are commonly built with a pair of scissoring links. This provides lateral stability to the machine over what would be typical of a single set of scissoring links.

[173] Huang, Figure 3, Annotated

Clarke also discloses a first and a second set of pivot arms as shown below:

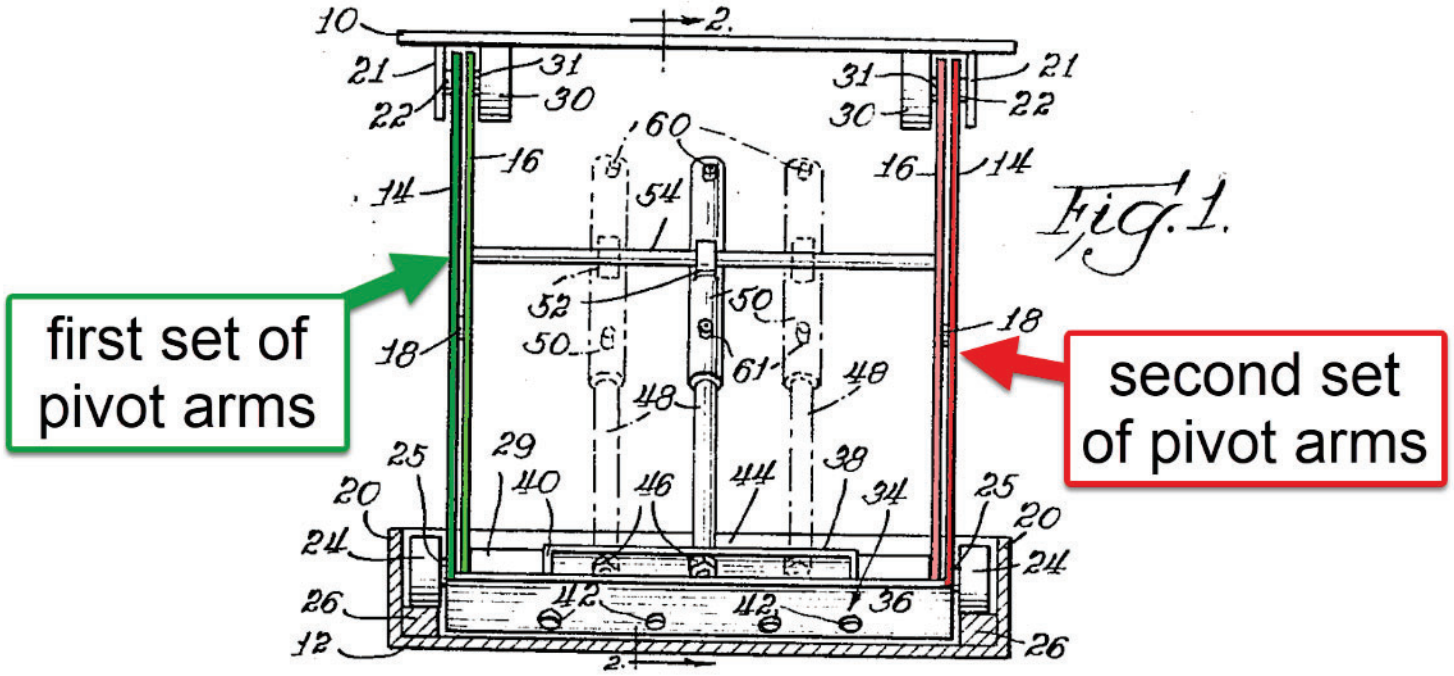

174

"Referring now more particularly to the drawings, the invention comprises a lift table having a top 10 and a base 12 connected by crossed scissors legs 14 and 16 at each side. Legs 14 and 16 are pivotally connected at 18." Clarke 1:67-70

4a2. an element that connects the first set of pivot arms to the second set of pivot arms.	**YES:** Huang discloses an element that connects the first set of pivot arms to the second set of pivot arms.

[174] Clarke Figure 1, annotated

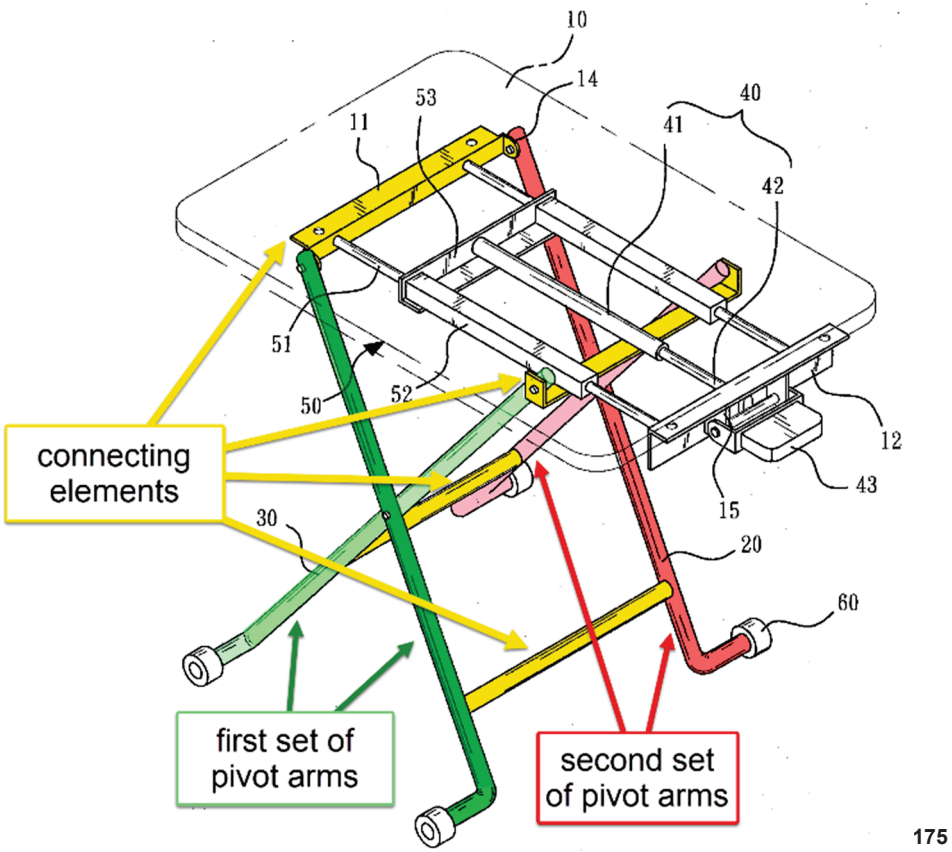

[175]

"For this objective, the present invention as an adjust able table with an assistant device comprises a table board, with a first fastener and a second fastener on the bottom side; a first foot pivotally connecting to the first fastener, a second foot pivotally connecting to the first foot; a pivot joint pivotally connecting to one end of the second foot" [Huang 0007]

As shown above, Huang discloses multiple elements that connects the first set of pivot arms to the second set of pivot arms. These include the pivot joint on the top frame (item 11), the bars near the bottom of the pivot arms, and part of the sliding mechanism (all marked in yellow).

[175] Huang, Figure 3, Annotated

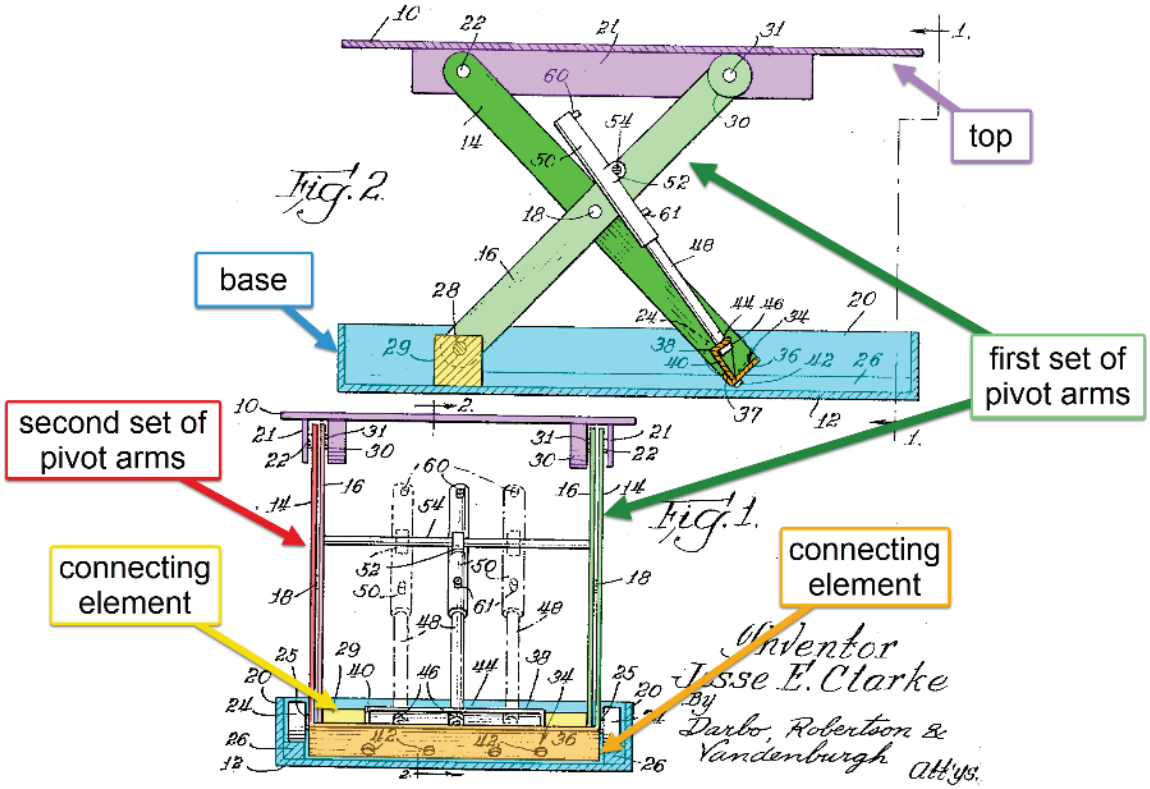

[176]

"Attached to the roller ends of the outer legs 14 is a cross piece 34 which may be in the form of an angle bar having one web 36 extending across the bottom ends of legs 14 with a shorter web 37 normal thereto." Clarke 2:15-18

"Depending from the top, at each side, is a plate 21. A pivot 22 near one end of the plate 21 connects the upper end of the leg 14 to the plate. Leg 14 has a roller 24 rotatably mounted at the other end on shaft 25. Roller 24 rides on the upper surface of a strip 26 in the bottom of one side of the base 12. One end of the other leg 16 has a pivot 28 connecting it to a support block 29 directly below the pivot 22 for the leg 14." Clarke 2:3-10

[176] Clarke Figures 1 & 2, Annotated

As shown above, Clarke also discloses multiple elements that connects the first set of pivot arms to the second set of pivot arms. These include the pivot joint on the top frame (item 22), the angle bars at the bottom of the pivot arms (item 34 shown in orange), and the base pivot joint (item 28) via the support block (item 29 shown in yellow). A POSITA will understand that these connecting elements are a typical and ordinary part of the design for scissor lift mechanisms and any one of these components in both Huang and Clarke are elements that connect the first set of pivot arms to the second set of pivot arms.	
5P. The desktop workspace of claim 1,	**YES:** As shown above, Huang in view of Clarke, and in further view of HJ Zottel discloses the desktop workspace of claim 1.
5a. wherein the work surface platform forms an upper work surface, and	**YES:** Both Huang and Clarke disclose that the work surface platform forms an upper work surface.

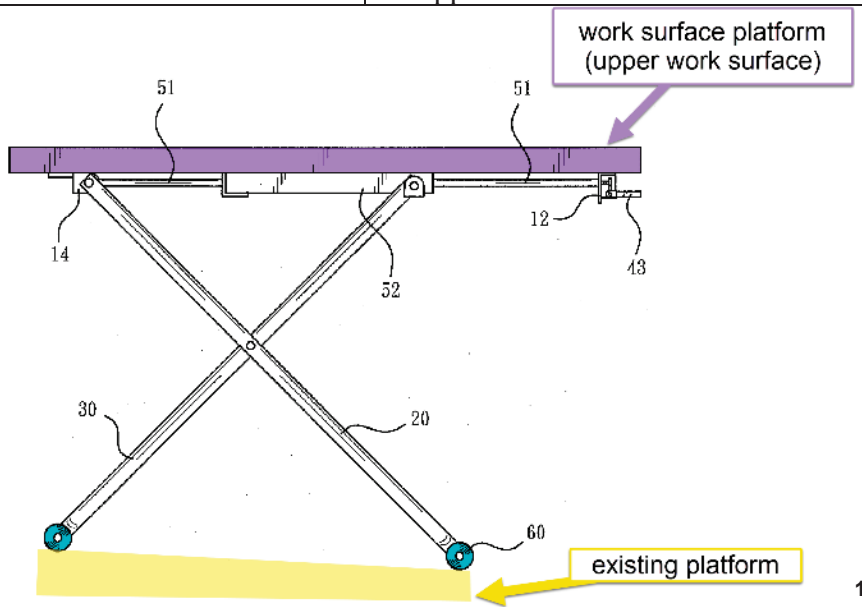

[177]

"A height-adjustable table includes a table board, a first foot, a second foot, an air pressure bar and an assistant device. The first foot crossly and pivotally connects with the second foot, wherein one end of the first foot pivotally connects with a first fastener on the bottom side of the table board, and one end of the second foot pivotally connects with a pivot joint." Huang, Abstract

[177] Huang, Figure 5, Annotated

As shown above Huang is a table which has a work surface platform (i.e. the table top). Further, there is an existing platform that Huang is set on. Like essentially ALL tables, the work surface platform is positioned above the floor, and is therefore "upper." This is the basic form and function of a table in the first place. Even if it is argued that Huang shows a frame but the figures do not show the upper work surface per se, the above citation makes it clear that, "a table board" is connected to the frame member of Huang which itself is part of the work surface platform and is an upper work surface. Clarke meets this limitation as well as shown below:

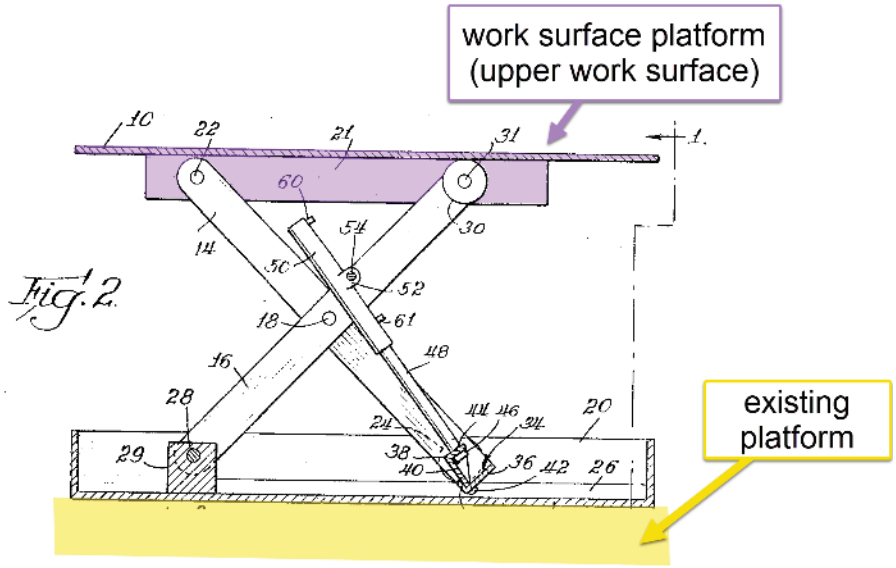

[178]

"Referring now more particularly to the drawings, the invention comprises a lift table having a top 10 and a base 12 connected by crossed scissors legs 14 and 16 at each side. Legs 14 and 16 are pivotally connected at 18." Clarke 1:67-70

As shown above Clarke is a table which has a work surface platform (i.e. the table top). Further, there is an existing platform that Clarke is set on. Like essentially ALL tables, the work surface platform is positioned above the floor, and is therefore "upper." This is the basic form and function of a table in the first place.

Thus, both Huang and Clarke demonstrate that their respective work surface platforms form upper work surfaces.

[178] Clarke, Figure 2, Annotated

5b. wherein the gas spring is completely covered by a profile of the work surface platform when viewed from above the upper work surface relative to the base, the profile of the work surface platform being defined by an outer perimeter of the upper work surface.	**YES:** Both Huang and Clarke disclose that the gas spring (or piston cylinder device) is completely covered by a profile of the work surface platform when viewed from above the work surface relative to the base, the profile of the work surface platform being defined by an outer perimeter of the upper work surface.

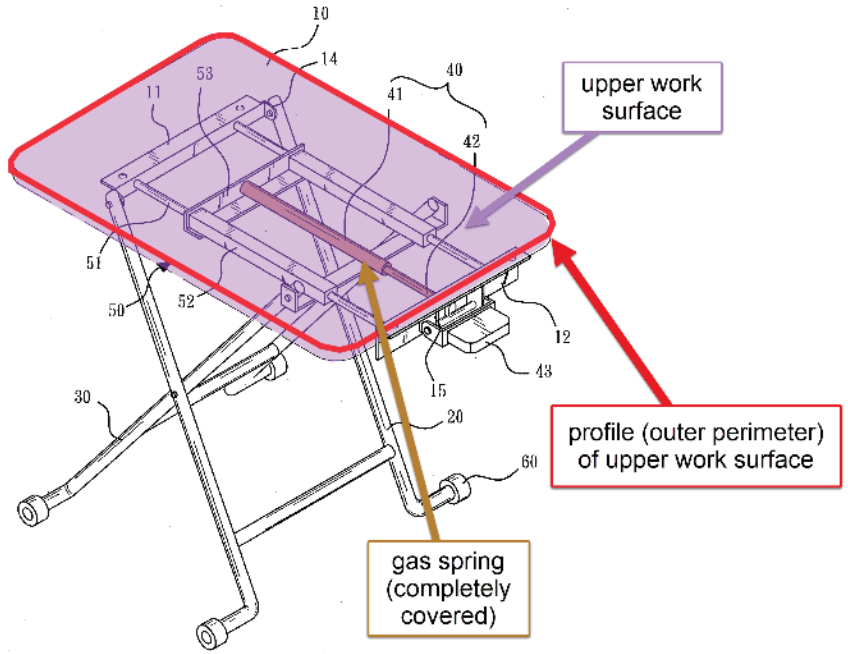

[179]

"A height-adjustable table includes a table board, a first foot, a second foot, an air pressure bar and an assistant device. The first foot crossly and pivotally connects with the second foot, wherein one end of the first foot pivotally connects with a first fastener on the bottom side of the table board, and one end of the second foot pivotally connects with a pivot joint." Huang, Abstract

As shown above and as discussed previously, Huang discloses an upper work surface and a gas spring, or air pressure bar. Further, the profile that is defined as the outer perimeter of the upper work surface is larger than and completely covers the gas spring below.

[179] Huang, Figure 3, Annotated

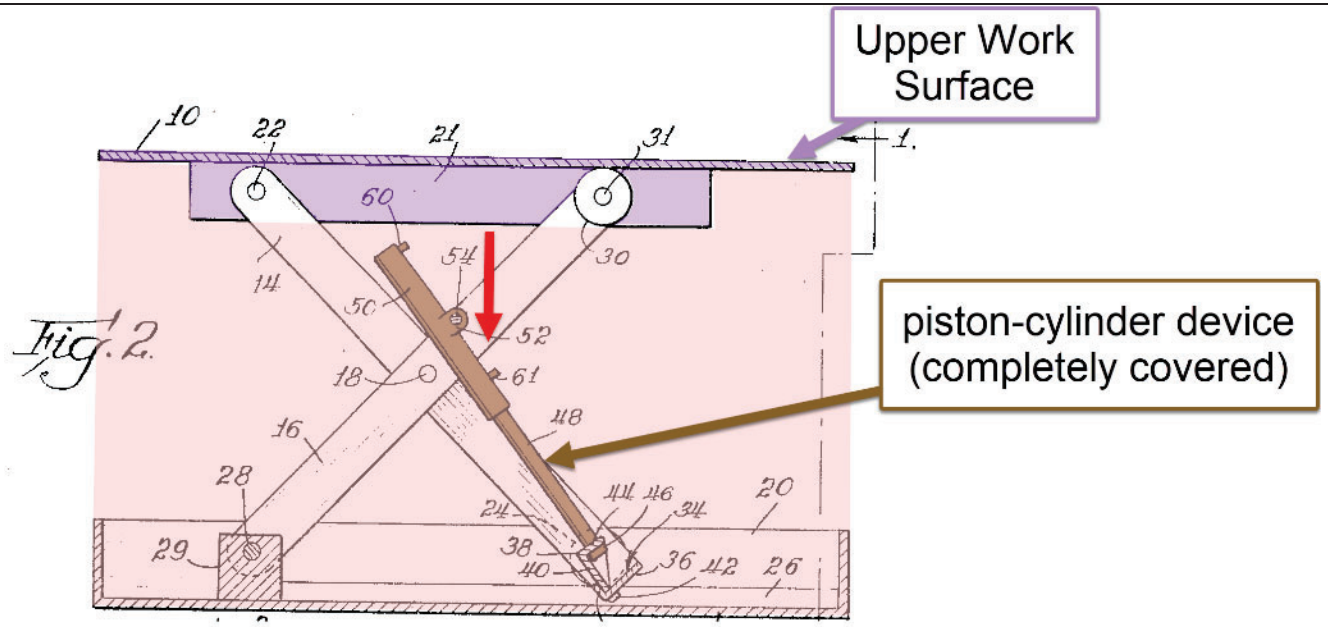

[180]

Similarly, Clarke discloses the same limitation. As discussed previously, Clarke uses a hydraulic cylinder which is a different type of piston cylinder actuator. However, as discussed previously, a POSITA would understand that from a design point of view, a gas spring can be installed in place of a hydraulic cylinder. The two devices are different in their behavior and certain applications may show that one is favorable over the other. Nevertheless, both a gas spring and a hydraulic cylinder a piston-cylinder devices and both can exert outward forces by extending under pressure. Thus, supposing that the hydraulic cylinder of Clarke was to be replaced with a gas spring to assist in the lift of an otherwise manually lifted table, such a substitution would be arranged such that the gas spring is completely covered by a profile of the work surface platform when viewed from above.

6P. The desktop workspace of claim 1,	**YES:** As shown above, Huang in view of Clarke, and in further view of HJ Zottel discloses the desktop workspace of claim 1.
6a. wherein the gas spring is a first spring,	**YES:** Huang discloses a gas spring that is a first spring.

[180] Clarke, Figure 2, Annotated

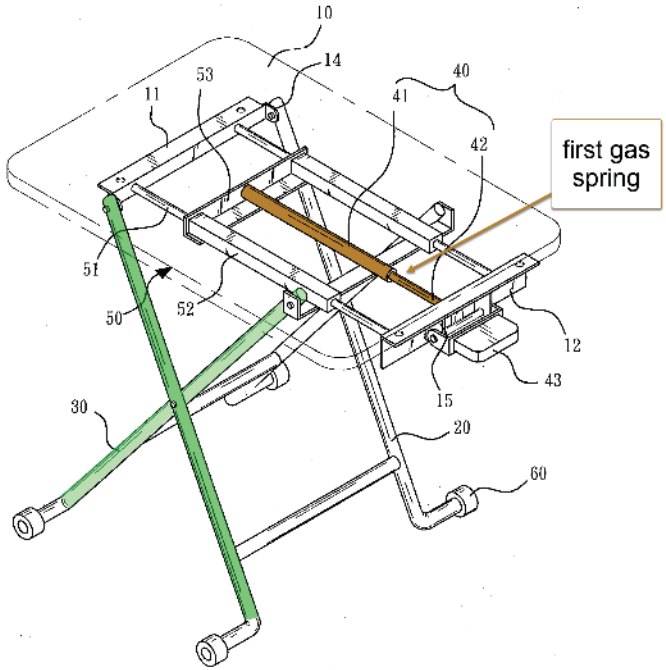

[181]

"The air pressure bar 40 is fixed between the first fastener 11 and the second fastener 12, and positioned at the middle of the pivot joint 31. The air pressure bar 40 possesses a rod body 41 and a stretching rod 42, wherein the end of the stretching rod 42 is fixed between two side connecting pieces 15 of the second fastener 12." Huang 0018

As shown above, Huang discloses a first gas spring (air pressure bar 40).

6b. the desktop workspace comprising a pair of springs attached to the height adjustment mechanism to assist in the elevation of the work surface platform, the pair of springs including the first spring and a second spring.	**YES:** A POSITA would recognize the addition of a second gas spring as an ordinary design choice such that the desktop workspace comprises a pair of springs attached to the height adjustment mechanism to assist in the elevation of the work surface platform, the pair of spring including the first spring and a second spring.

[181] Huang Figure 3, Annotated

	In addition to this, Huang in view of Clarke, and in further view of HJ Zottel and other references such as CN203934825 to Zhang discloses a second gas spring such that the desktop workspace comprises a pair of springs attached to the height adjustment mechanism to assist in the elevation of the work surface platform, the pair of springs including the first spring and a second spring.

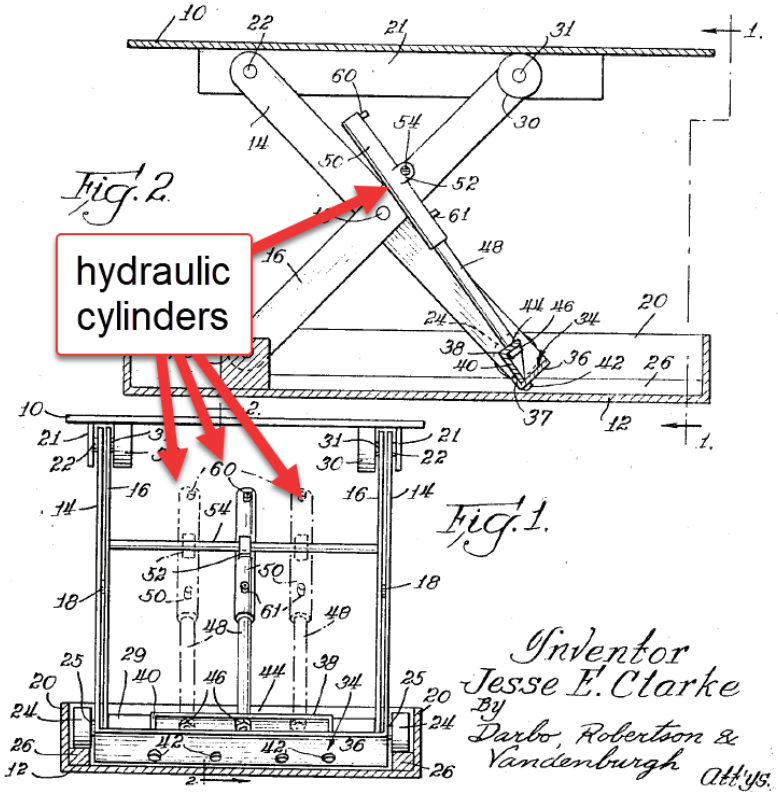

[182]

"To supply air or fluid pressure, each cylinder 50 is provided with an inlet 60 near its outer end to which some suitable connection (not shown) is made." Clarke 2:67-69

[182] Clarke, Figure 1 & 2, Annotated

"In this invention, a lift table with a completely closed scissor linkage is raised by one or more hydraulic cylinders, depending on the lifting force necessary." US 3,282,566 to Clarke 1:56-59 A POSITA would recognize that having multiple actuators for lifting the scissor lift linkage is well-known and customary. For example, Clarke discloses a scissor lift platform with three fluid power cylinders acting in parallel. Huang in view of Clarke would also include this.	
7. The desktop workspace of claim 1,	**YES:** As shown above, Huang in view of Clarke, and in further view of HJ Zottel discloses the desktop workspace of claim 1.
7a. wherein the sliding mechanism is a first sliding mechanism, **7b.** the desktop workspace further comprising a second sliding mechanism,	**YES:** Huang in view of Clarke discloses that the sliding mechanism is a first sliding mechanism. Further this combination discloses that there is a second sliding mechanism.

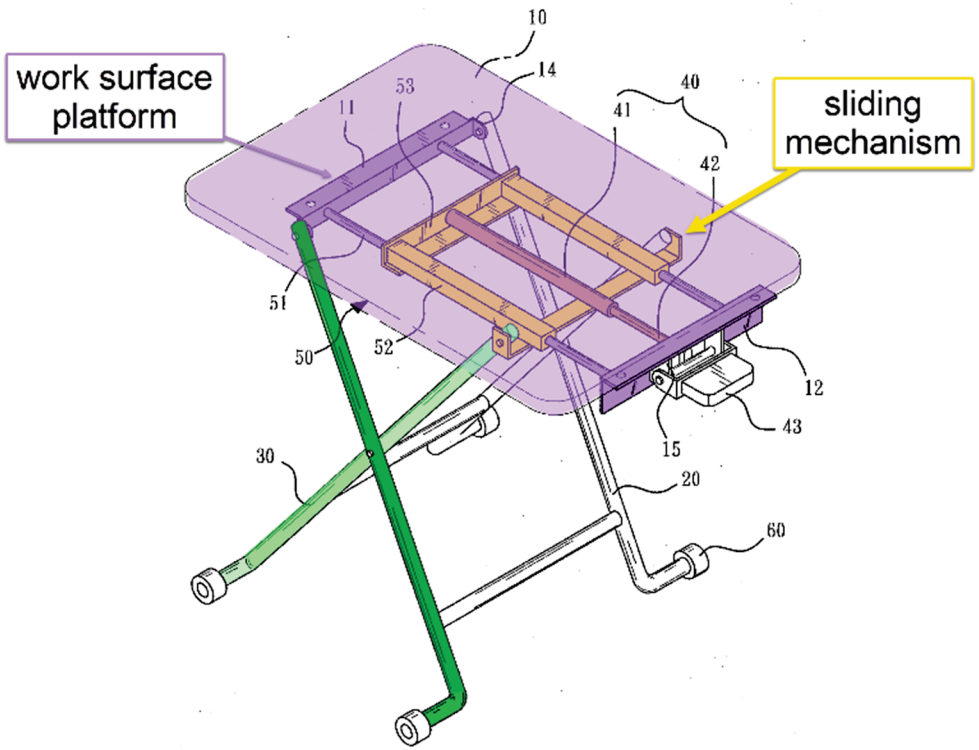

183

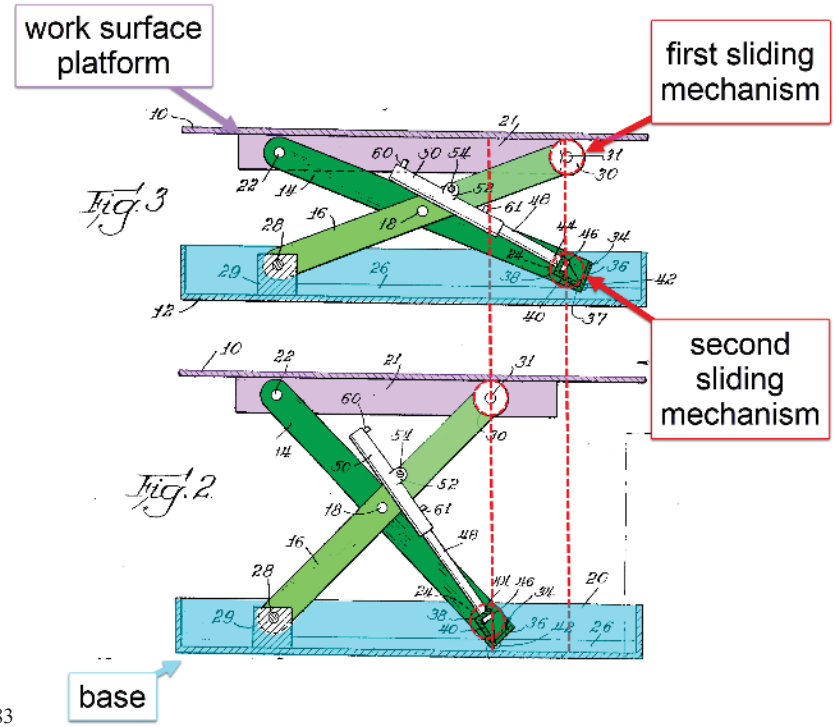

184

"When the air pressure bar 40 is being operated, the sliding members 52 together with the rod body 41 of the air pressure bar 40 relatively displace against the sliding Sticks 51, thereby changing the angle included by the first foot 20 and the second foot 30, in order to adjust the height of the table." Huang 0021

"Depending from the top, at each side, is a plate 21. A pivot 22 near one end of the plate 21 connects the upper end of the leg 14 to the plate. Leg 14 has a roller 24 rotatably mounted at the other end on shaft 25. ***Roller 24 rides on the upper surface of a strip 26*** *in the bottom of one side of the base 12. One end of the other leg 16 has a pivot 28 connecting it to a support block 29 directly below the pivot 22 for the leg 14.* ***A roller 30***

[183] Huang, Figure 3, Annotated
[184] Clarke, Figures 2 & 3, Annotated

mounted on shaft 31 at the other end of leg 16 rides on the underside of the table top 10. *The legs are closely folded together by the pivot 18 intermediate their ends, for parallel scissor action between the base and the top." Clarke 2:3-14 (emphasis added)* As shown above, both Huang and Clarke have a first sliding mechanism, which is what allows the top portion of the scissor links to translate relative to the work surface platform. In addition to this, Clarke discloses a second sliding mechanism that is operable between the pivot arms and the base. Again, this is typical scissor linkage design that any POSITA would readily understand is ubiquitous. As discussed previously, the combination of Huang in view of Clarke would incorporate the base of Clarke. Consequently, it would also incorporate the sliding mechanism of Clarke. As the Clarke sliding mechanism is less complex than the sliding mechanism of Huang, a POSITA would have further motivation to utilize the Clarke type sliding mechanism when incorporating two sliding mechanisms into Huang in view of Clarke.	
7c. wherein either the first sliding mechanism or the second sliding mechanism is attached or slides along the work surface platform, **7d.** and the other of the first sliding mechanism and the second sliding mechanism is attached to or slides along the base.	**YES:** Huang in view of Clarke discloses that either the first or the second sliding mechanism is attached or slides along the work surface platform. Further, the other first and second sliding mechanism is attached to or slides along the base.

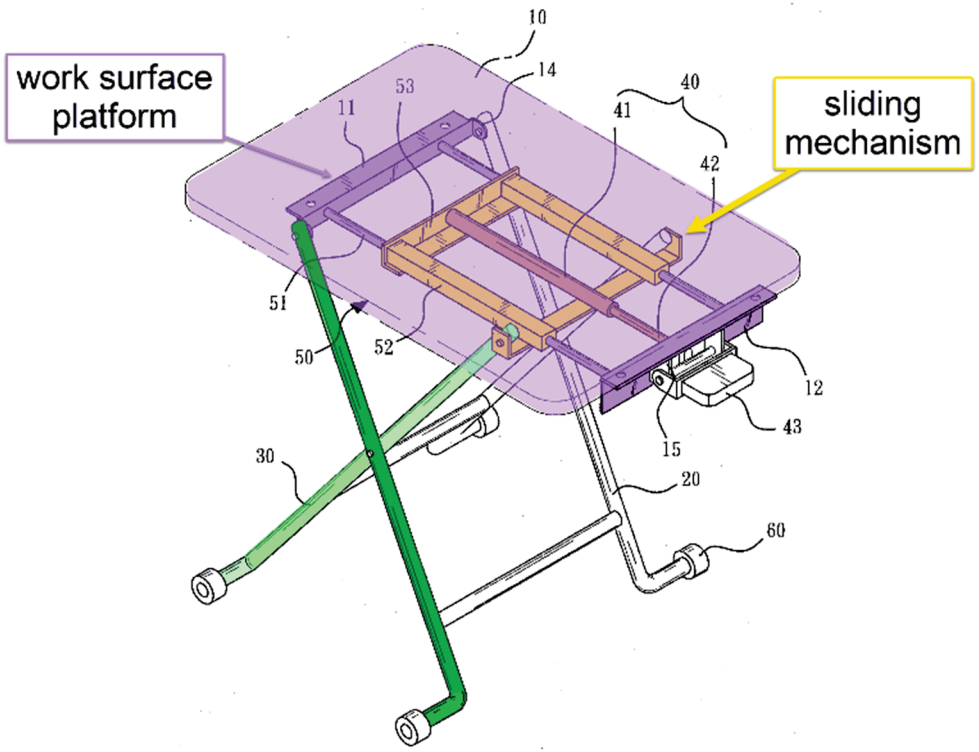

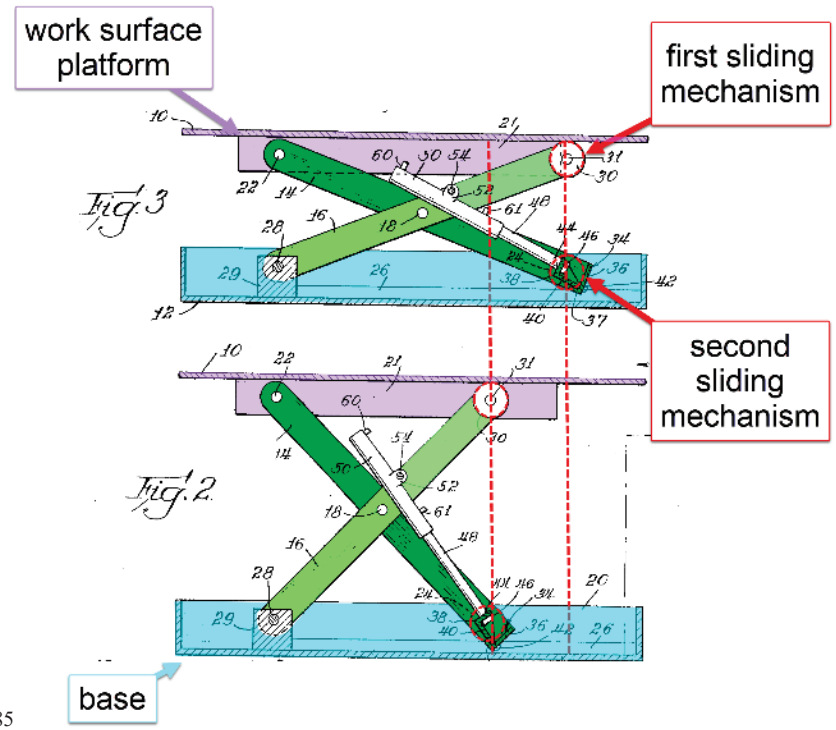

185

186

"When the air pressure bar 40 is being operated, the sliding members 52 together with the rod body 41 of the air pressure bar 40 relatively displace against the sliding Sticks 51, thereby changing the angle included by the first foot 20 and the second foot 30, in order to adjust the height of the table." Huang 0021

"Depending from the top, at each side, is a plate 21. A pivot 22 near one end of the plate 21 connects the upper end of the leg 14 to the plate. Leg 14 has a roller 24 rotatably mounted at the other end on shaft 25. ***Roller 24 rides on the upper surface of a strip 26 in the bottom of one side of the base*** *12. One end of the other leg 16 has a pivot 28 connecting it to a support block 29 directly below the pivot 22 for the leg 14.* ***A roller 30 mounted on shaft 31 at the other end of leg 16 rides on the underside of the table top 10****. The legs are closely folded together by the pivot 18 intermediate their ends, for parallel scissor action between the base and the top." Clarke 2:3-14 (emphasis added)*

[185] Huang, Figure 3, Annotated
[186] Clarke, Figures 2 & 3, Annotated

As shown above, both Huang and Clarke show that the first sliding mechanism(s) are attached to or slide along the work surface platform. Further, Clarke has a second sliding mechanism (item 24 as shown above) that is attached to or slides along the base. As discussed previously, the combination of Huang in view of Clarke would incorporate the base of Clarke. A POSITA would be motivated to reduce the complexity of Huang in view of Clarke by utilizing the Clarke sliding mechanism. Consequently, it would also incorporate the sliding mechanism in the base of Clarke.	
8P. The desktop workspace of claim 1,	**YES:** As shown above, Huang in view of Clarke, and in further view of HJ Zottel discloses the desktop workspace of claim 1.
8a. wherein the scissoring motion when raising and lowering the work surface platform to various heights of the height adjustment mechanism moves the work surface platform in a straight vertical direction relative to the base.	**YES:** Clarke discloses that the scissoring motion when raising and lowering the work surface platform to various heights of the height adjustment mechanism moves the work surface platform in a straight vertical line relative to the base.

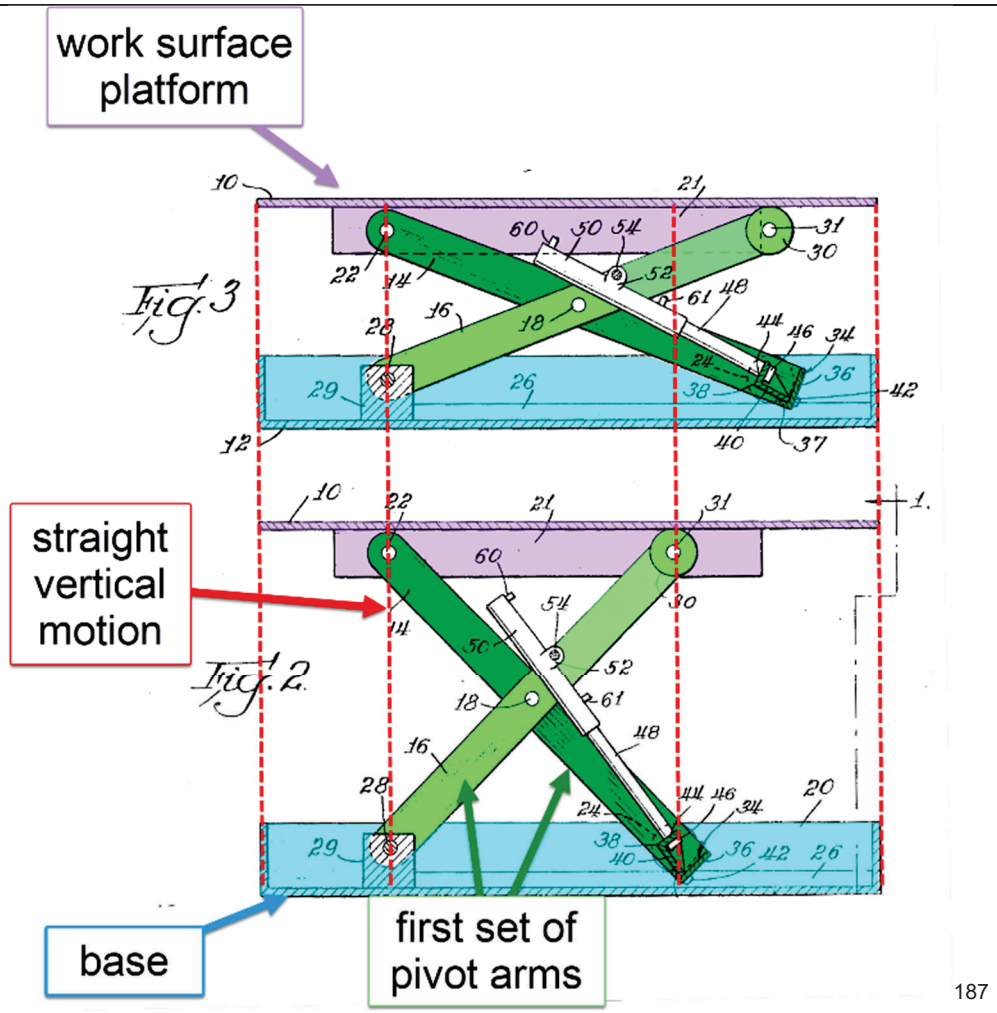

[187]

"Depending from the top, at each side, is a plate 21. A pivot 22 near one end of the plate 21 connects the upper end of the leg 14 to the plate. Leg 14 has a roller 24 rotatably mounted at the other end on shaft 25. Roller 24 rides on the upper surface of a strip 26 in the bottom of one side of the base 12. One end of the other leg 16 has a pivot 28 connecting it to a support block 29 directly below the pivot 22 for the leg 14. A roller 30

[187] Clarke, Figures 2 & 3, Annotated

mounted on shaft 31 at the other end of leg 16 rides on the underside of the table top 10. The legs are closely folded together by the pivot 18 intermediate their ends, ***for parallel scissor action between the base and the top****." Clarke 2:3-14 (emphasis added)*

As shown above, the scissor mechanism of Clarke moves the work surface platform in a straight vertical line relative to the base. This is a property typical of scissor lifting mechanisms generally as a POSITA would understand. Thus, the Huang mechanism also exhibits straight-line vertical motion. As previously discussed, a POSITA has motivation to combine the less complex mechanism, and the more distributed base, of Clarke with the more easily adjustable mechanism of Huang to achieve various heights. This feature is afforded by the locking gas spring in Huang in view of Clarke.

9P. The desktop workspace of claim 1,	**YES:** As shown above, Huang in view of Clarke, and in further view of HJ Zottel discloses the desktop workspace of claim 1.
9a. wherein the slidable tray protrudes out, down, and parallel to the work surface platform in the extended position.	**YES:** This combination shows that the slidable tray protrudes out, down, and parallel to the work surface platform in the extended position.

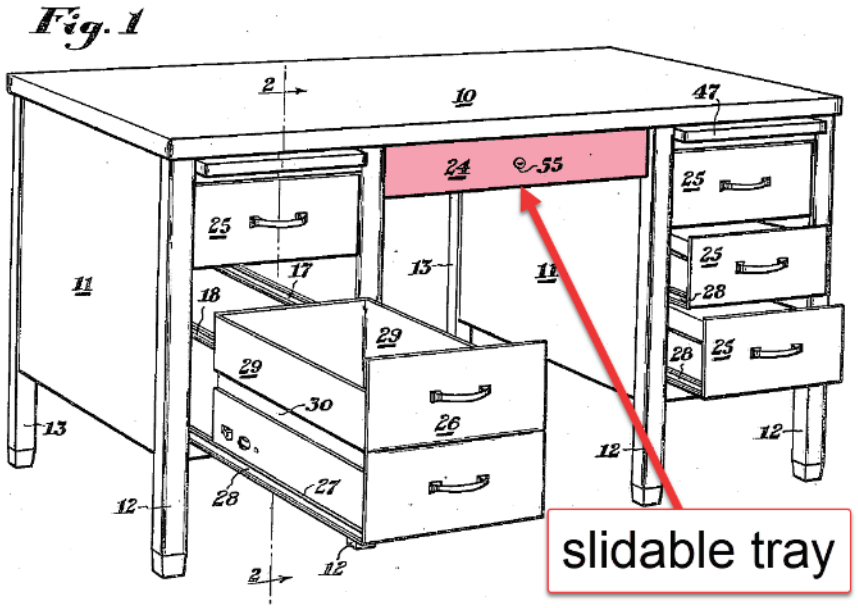

[188]

[188] HJ Zottel Figure 1, annotated

"The primary objects of the instant invention are to provide a desk having a plurality of box drawers and one or more vertical letter file drawers…" HJ Zottel 1:4-6 *"The desk comprises a top 10 supported by drawer supporting pedestals 11 having front legs 12 and rear legs 13 attached thereto" HJ Zottel 1:47-50* *"As best shown in Figure 1, the desk is provided with a center drawer 24 between the pedestals 11" HJ Zottel 2:9-11* HJ Zottel shows a slidable tray (drawer 24) which is one of an array of drawers that are integrated with the desk disclosed by HJ Zottel. The drawers of Figure 1 are shown in various state of being opened. Some of them are shown in a closed position, such as central drawer 24 and some of drawers 25. Others are shown in a partially open state such as two of the drawers 25 shown above. Still others such as drawer 26 is shown in a fully open state. Cumulatively, it is clear that the drawers are arranged in a parallel manner to the work surface platform (as demonstrated by the various states shown of open vs. closed drawers). At the same time all of the drawers are arranged strictly below the work surface platform. When any given drawer is pulledo out, it will translate to a position that is protrusionally outward away from the work surface platform, as drawer 26 is shown in Figure 1. Thus, when central drawer 24 is in the extended or open position, it will protrude out, down, and parallel to the work surface platform.	
10P. The desktop workspace of claim 1,	**YES:** As shown above, Huang in view of Clarke, and in further view of HJ Zottel discloses the desktop workspace of claim 1.
10a. wherein the gas spring is attached directly to the one of the set of pivot arms.	**YES:** Huang in view of Clarke discloses that the gas spring is attached directly to one of the set of pivot arms.

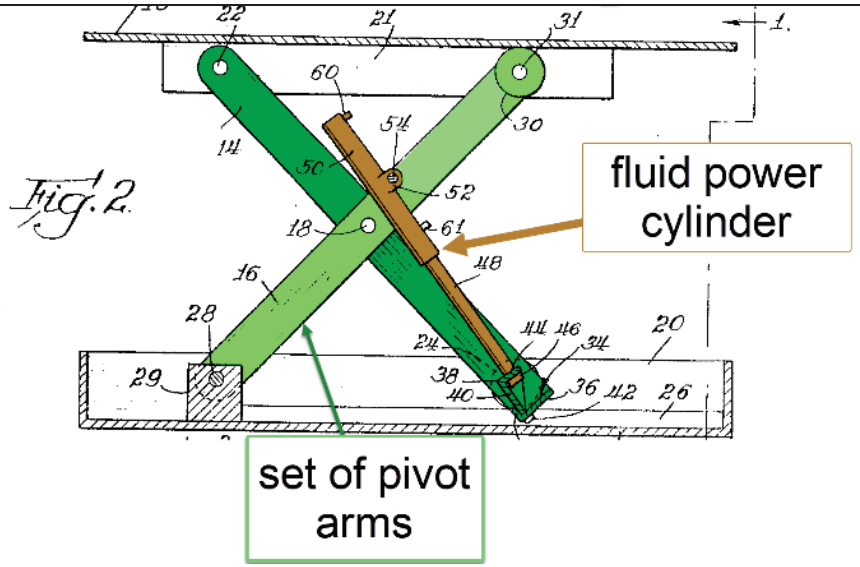

[189]

"Cylinder 50 has a side mounting plate 52 pivotally mounted on a rod 54. Rod 54 extends between the two opposite legs 16 to which it is connected." Clarke 2:33-36

As shown above, the piston cylinder actuator of Clarke is attached directly to one of the set of pivot arms. The cylinder has a bottom part 50 (the cylinder end) which is pivotally connected to leg member 16, which is one of the first set of pivot arms. POSITA would recognize that attaching the piston cylinder actuator, or a gas spring, directly to the pivot arm is a design choice. A POSITA would be motivated to avoid the complex sliding mechanism of Huang, with its many sliding parts that could become misaligned, by connecting the gas spring of Huang directly to the pivot arm of the Clarke mechanism.

12P. The desktop workspace of claim 1,	**YES:** As shown above, Huang in view of Clarke, and in further view of HJ Zottel discloses the desktop workspace of claim 1.
12a. further comprising a height adjustment locking mechanism that holds the work surface platform at various vertical heights above the base.	**YES:** Huang and Clarke disclose a height adjustment locking mechanism that holds the work surface platform at various vertical heights above the base.

[189] Clarke, Figure 2, Annotated

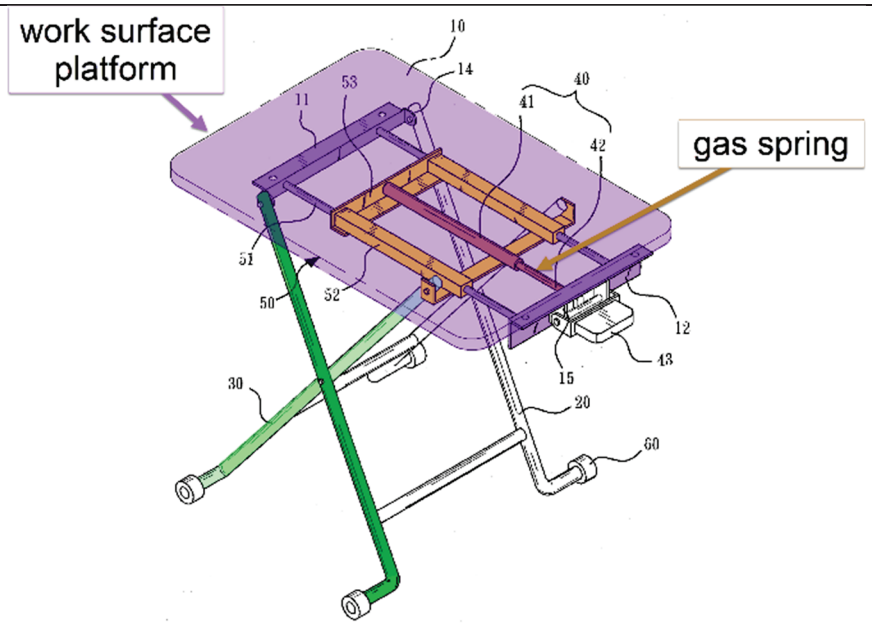

[190]

"When the air pressure bar 40 is being operated, the sliding members 52 together with the rod body 41 of the air pressure bar 40 relatively displace against the sliding Sticks 51, thereby changing the angle included by the first foot 20 and the second foot 30, in order to adjust the height of the table." Huang [0021]

"In conclusion, the table of the present invention enables the sliding members to slide with the help of the assistant device, and ***fixes the combining piece between the two sliding members****, thereby offering the function of smoothly sliding to the air pressure bar when operated, and reinforcing the whole structural strength of the table, together with the benefit of increasing the service life of the air pressure bar." Huang [0027] (emphasis added)*

As shown above Huang discloses the use of a locking gas spring to hold the work surface platform at various vertical heights above the base.

[190] Huang, Figure 3, Annotated

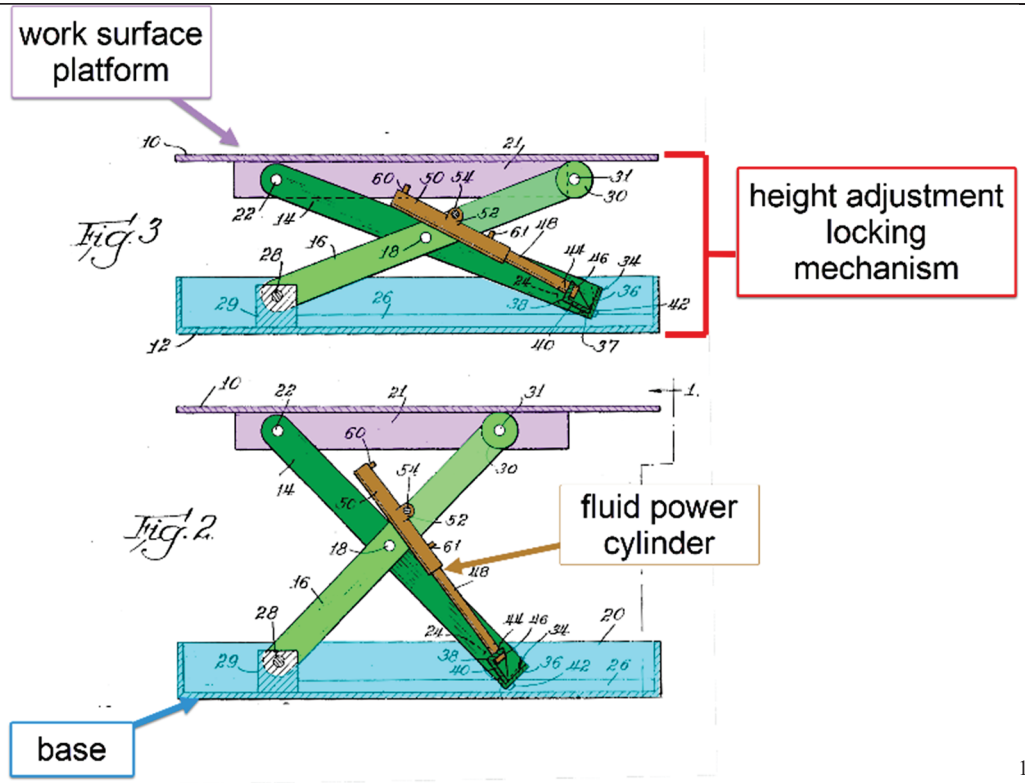

[191]

*"Depending from the top, at each side, is a plate 21. A pivot 22 near one end of the plate 21 connects the upper end of the leg 14 to the plate. Leg 14 has a roller 24 rotatably mounted at the other end on shaft 25. Roller 24 rides on the upper surface of a strip 26 in the bottom of one side of the base 12. One end of the other leg 16 has a pivot 28 connecting it to a support block 29 directly below the pivot 22 for the leg 14. A roller 30 mounted on shaft 31 at the other end of leg 16 rides on the underside of the table top 10. The legs are closely folded together by the pivot 18 intermediate their ends, **for parallel scissor action between the base and the top**." Clarke 2:3-14 (emphasis added)*

As shown above, Clarke also discloses a height adjusting locking mechanism. This mechanism's purpose is to hold the work surface platform at various heights above the base as is scene in the two different heights in Figures 1 & 2 above. The fluid power cylinder acts as the locking

[191] Clarke, Figure 2 & 3, Annotated

mechanism to hold the device at the varying heights. This is common in any scissor device. As explained previously, a POSITA would be motivated to use a gas spring in place of the cylinder of Clarke for manual actuation in lower load situations such as Huang references.	
14P. The desktop workspace of claim 1,	**YES:** As shown above, Huang in view of Clarke, and in further view of HJ Zottel discloses the desktop workspace of claim 1.
14a. further comprising two sliders that connect the slidable tray to the work surface platform,	**YES:** Huang in view of Clarke and in further view of HJ Zottel discloses two sliders that connect the slidable try to the work surface platform.

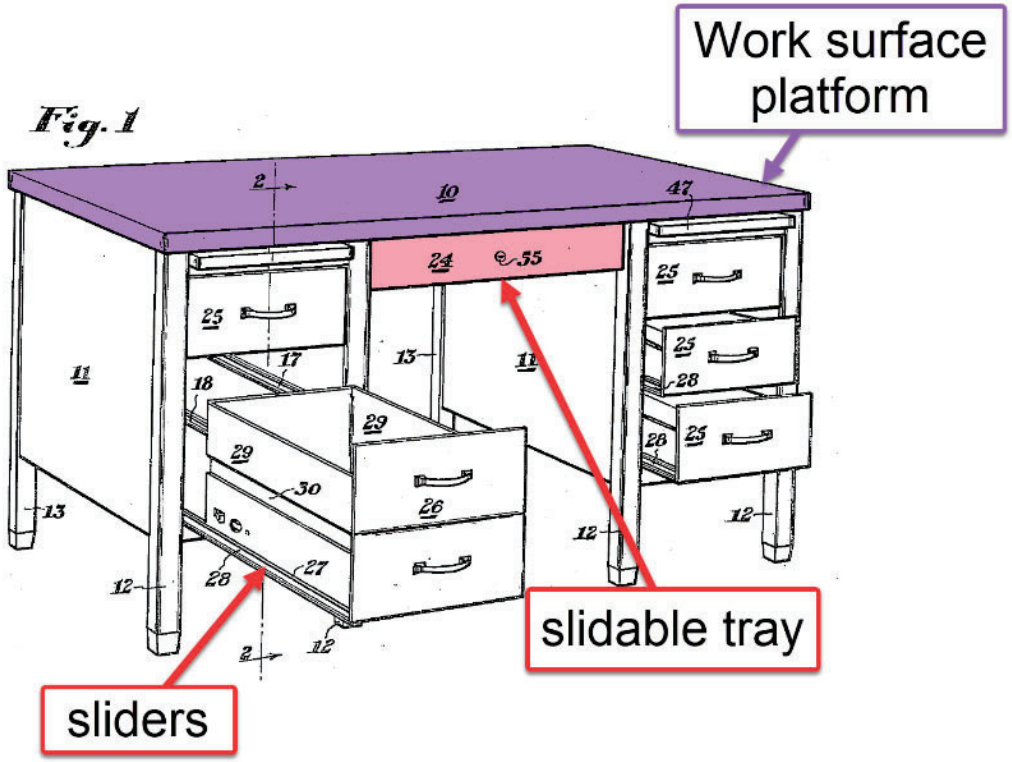

[192]

"As best shown in Figure 1, the desk is provided with a center drawer 24 between the pedestals 11" HJ Zottel 2:9-11

[192] HJ Zottel, Figure 1, annotated

"The runners 28 of each drawer slidably engage a pair of drawer guides 16, 17 or 18 to thus slidably mount each drawer within a pedestal 11." HJ Zottel 2:17-20

As shown above, HJ Zottel discloses the use of two sliders that connect each drawer to the rest of the desk (i.e. runners 28). Specifically, HJ Zottel describes that each drawer slidably enages with a *pair* of guides as shown in the citation above. This is conistent with having a pair of sliders. Further, it is customary and typical to have a pair of sliders for a drawer (particularly if it is a side mount or top mount) as this provides for a more balanced drawer arrangment. As discussed previously, a POSITA will understand the ordinary permutations of drawer mounts, i.e. bottom mount, side, mount, and top mount. As discussed previously, when combining the teachings of HJ Zottel with the combination of Huang in view of Clarke, a POSITA would be motivated to use a top-mount drawer as that is the only structure available to mount a drawer to in this combination. Thus, a POSITA would be motivated to use sliders to connect the slidable tray to the work surface platform.

In addition to this, a POSITA may also consider other well-known teachings in the prior art such as that of Drabczyk which shows the use of two sliders that connect the slidable tray to the work surface platform as shown below:

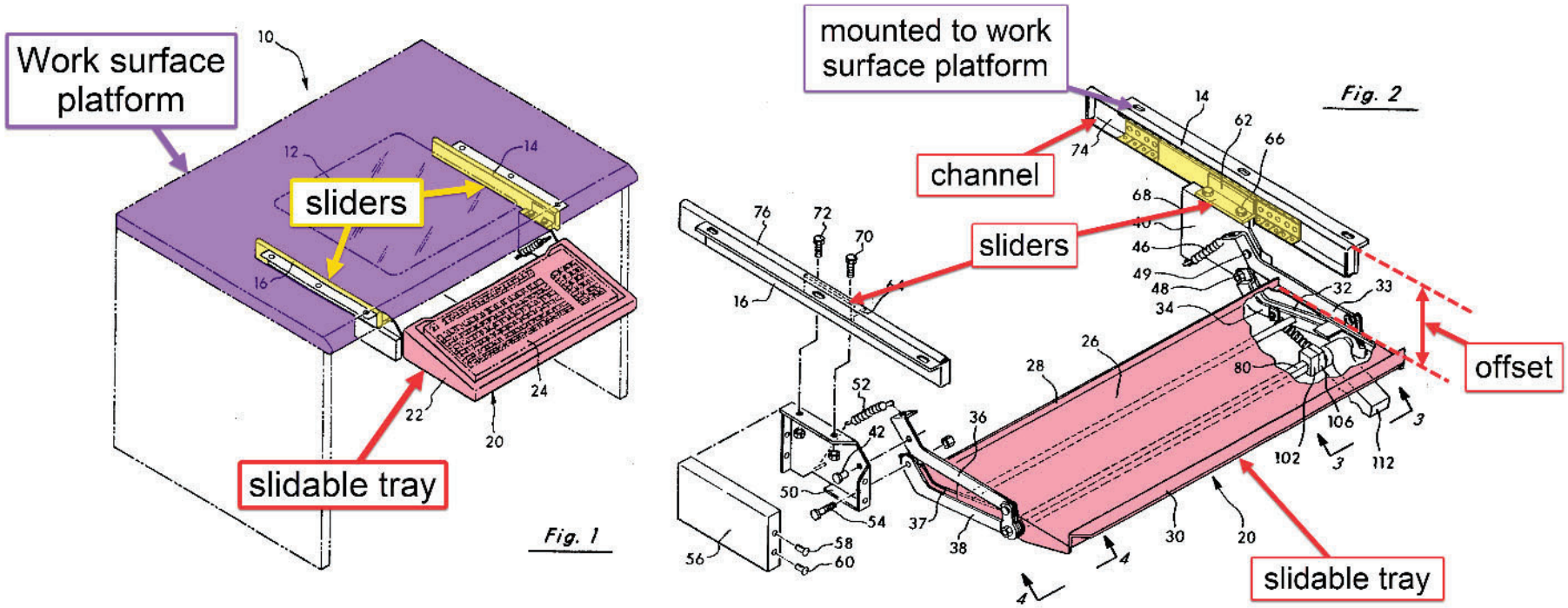

193

"Keyboard holder 20 is secured to workstation 10 to slide from an out of the way position beneath the top of workstation 10 to a working position as shown in FIG. 1. Keyboard holder 20, shown in FIG. 1, includes a molded plastic tray 22, which holds most types and sizes of keyboards 24." Drabczyk 3:36-41

"Mounting plates 40, 42 are affixed to slide brackets 62, 64, respectively by bolts 66-72. Slide brackets 62, 64 slide within extendible tracks 74, 76 on mounting brackets 14, 16. ***The design and operation of slide brackets 62, 64 and mounting brackets 14, 16 are conventional in design and are not discussed in any further detail.*** *Thus, support tray 26, along with keyboard tray 22 and keybaord 24 are movable from an out of the way position beneath the upper surface of workstation 10 to a working position shown in FIG. 1." Drabczyk 3:65-4:6 (emphasis added)*

As shown above Drabcyzk discloses the use of two sliders (slide brackets 62, 64) which connect the slidable tray (keyboard holder 20 and molded plastic tray 22) to the work surface platform, i.e. the desk top. With or without the dislosure of Drabczyk, a POSITA would be motivated to include

193 Drabczyk Figures 1 and 2, combined and annotated

a top-mounted drawer in the typical and traditional style (i.e. with a pair of sliders) when combining the teachings of HJ Zottel with Huang in view of Clarke.	
14b. wherein the two sliders operate in parallel to facilitate selectively positioning the slidable tray between the stored position under the work surface platform and the extended position that is outward and lowered with respect to the work surface platform.	**YES:** Huang in view of Clarke and in further view of HJ Zottel discloses that the two sliders operate in parallel to facilitate selectively positioning the slidable tray between the stored position under the work surface platform and the extended position that is outward and lowered with respect to the work surface platform.

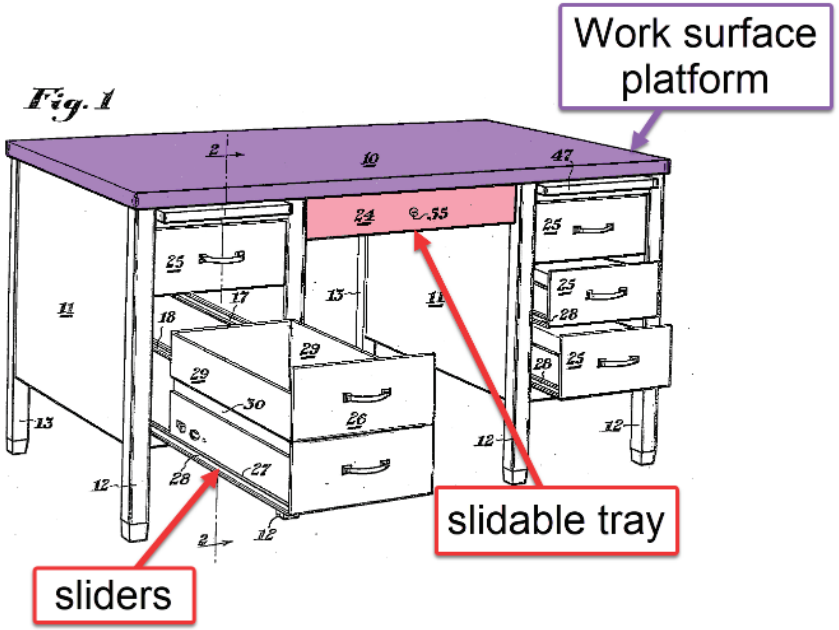

[194]

"As best shown in Figure 1, the desk is provided with a center drawer 24 between the pedestals 11" HJ Zottel 2:9-11

"The runners 28 of each drawer slidably engage a pair of drawer guides 16, 17 or 18 to thus slidably mount each drawer within a pedestal 11." HJ Zottel 2:17-20

[194] HJ Zottel Figure 1, annotated

As discussed previously, HJ Zottel discloses two sliders. Further, as is typical and customary, the two sliders operate in parallel. In fact, when the drawers of HJ Zottel are extended or retracted, each of the two sliders operate together. For example, each drawer of HJ Zottel can be placed in a stowed position (as drawer 24 is shown above) or in a opened position (such as drawer 26 shown above). Further as is typical of drawers in general, when extended the drawer is positioned outward and lowered with respect to the work surface platform.

Further still, a POSITA can look to prior art such as Drabczyk which also discloses the use of two sliders (as previously discussed) but also demonstrates that the sliders operate in parallel which facilitate positioning the tray in a stored position under the work surface or an extended position where it is spaced outward and lowered with respect to the work surface platform as shown below:

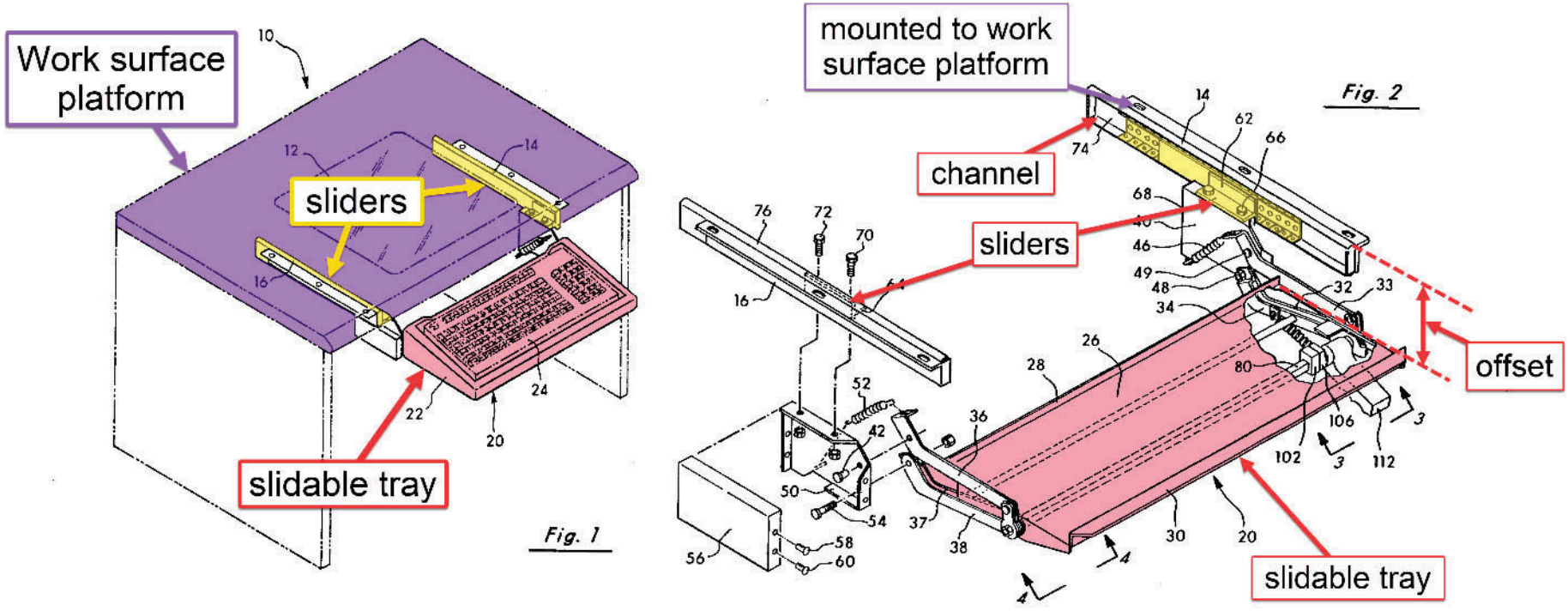

[195]

"Keyboard holder 20 is secured to workstation 10 to slide from an out of the way position beneath the top of workstation 10 to a working position as shown in FIG. 1. Keyboard holder 20, shown in FIG. 1, includes a molded plastic tray 22, which holds most types and sizes of keyboards 24." Drabczyk 3:36-41

[195] Drabczyk Figures 1 and 2, combined and annotated

"Mounting plates 40, 42 are affixed to slide brackets 62, 64, respectively by bolts 66-72. Slide brackets 62, 64 slide within extendible tracks 74, 76 on mounting brackets 14, 16. ***The design and operation of slide brackets 62, 64 and mounting brackets 14, 16 are conventional in design and are not discussed in any further detail.*** *Thus, support tray 26, along with keyboard tray 22 and keybaord 24 are movable from an out of the way position beneath the upper surface of workstation 10 to a working position shown in FIG. 1." Drabczyk 3:65-4:6 (emphasis added)* As shown above, Drabczyk discloses the use of two sliders (slide brackets 62, 64) that operate in parallel that allow the keyboard to slide between an extended position as shown in Figure 1 above and a stowed position in accordance with traditional design.[196] In addition to this, as shown in Figure 1 of Drabczyk that shows that when in the extended position, the slidable tray is positioned outward and lowered with respect to the work surface platform.	
15P. The desktop workspace of claim 1,	**YES:** As shown above, Huang in view of Clarke, and in further view of HJ Zottel discloses the desktop workspace of claim 1.
15a. wherein the one end of the gas spring is fixed relative to an underside of the work surface platform such that the one end of the gas spring acts on the underside of the work surface platform.	**YES:** Huang discloses that one end of the gas spring is fixed relative to an underside of the work surface platform such that the one end of the gas spring acts on the underside of the work surface platform

[196] Drabczyk 3:65-4:6

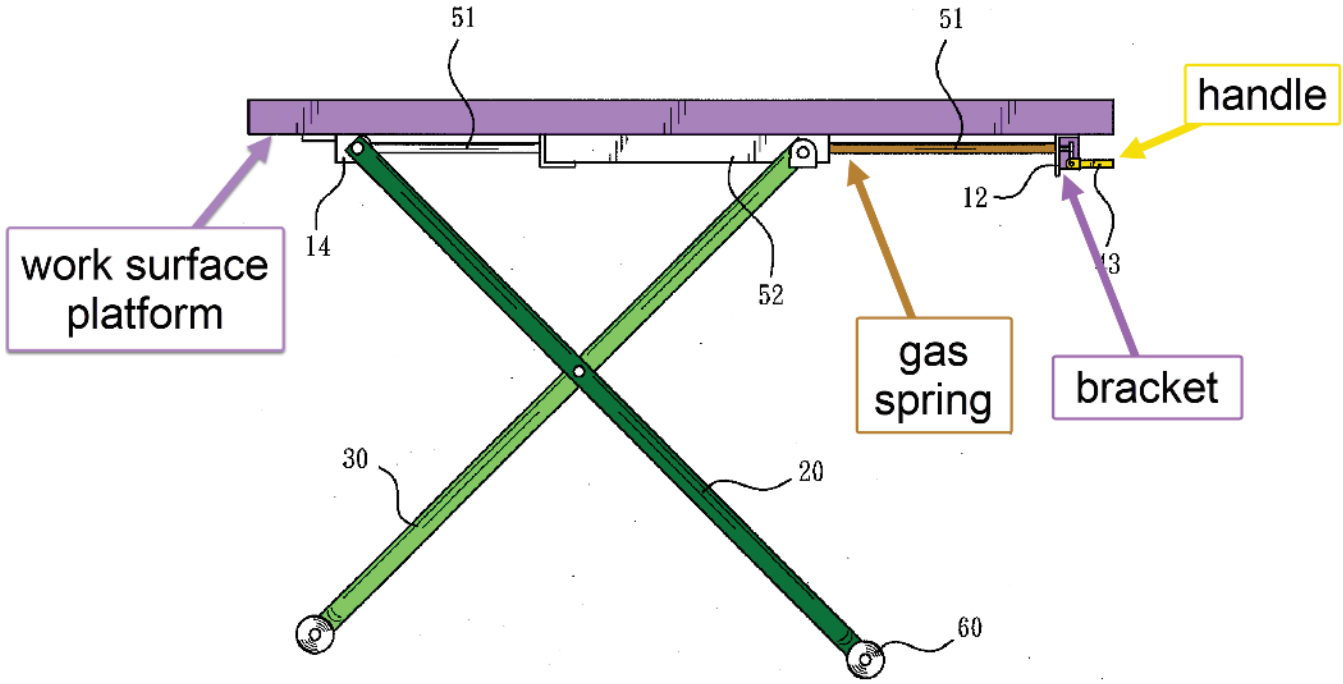

[197]

"The air pressure bar 40 is fixed between the first fastener 11 and the second fastener 12, and positioned at the middle of the pivot joint 31. The air pressure bar 40 possesses a rod body 41 and a stretching rod 42, wherein the end of the stretching rod 42 is fixed between two side connecting pieces 15 of the second fastener 12." Huang 0018

As shown above, one end of the gas spring is fixed to the work surface platform. Huang discloses a bracket (second fastener 12) which is mounted on the work surface platform. A POSITA would understand that this mounting bracket is fixed to the underside of the work surface platform. As discussed previously, a POSITA would have been motivated to connect the locking gas spring of Huang in view of Clarke in such a way that the handle would on the work surface platform for the convenience of the user. As discussed previously, this will provide for greater ease of use for the adjustment mechanism.

16P. The desktop workspace of claim 15,	**YES:** As shown above, Huang in view of Clarke, and in further view of HJ Zottel discloses the desktop workspace of claim 15.

[197] Huang, Figure 5, Annotated

16a. wherein the one end of the gas spring is fixed to the work surface platform via a bracket mounted to the underside of the work surface platform.	**YES:** Huang discloses that one end of the gas spring is fixed to the work surface platform via a bracket fixed to an underside of the work surface platform.

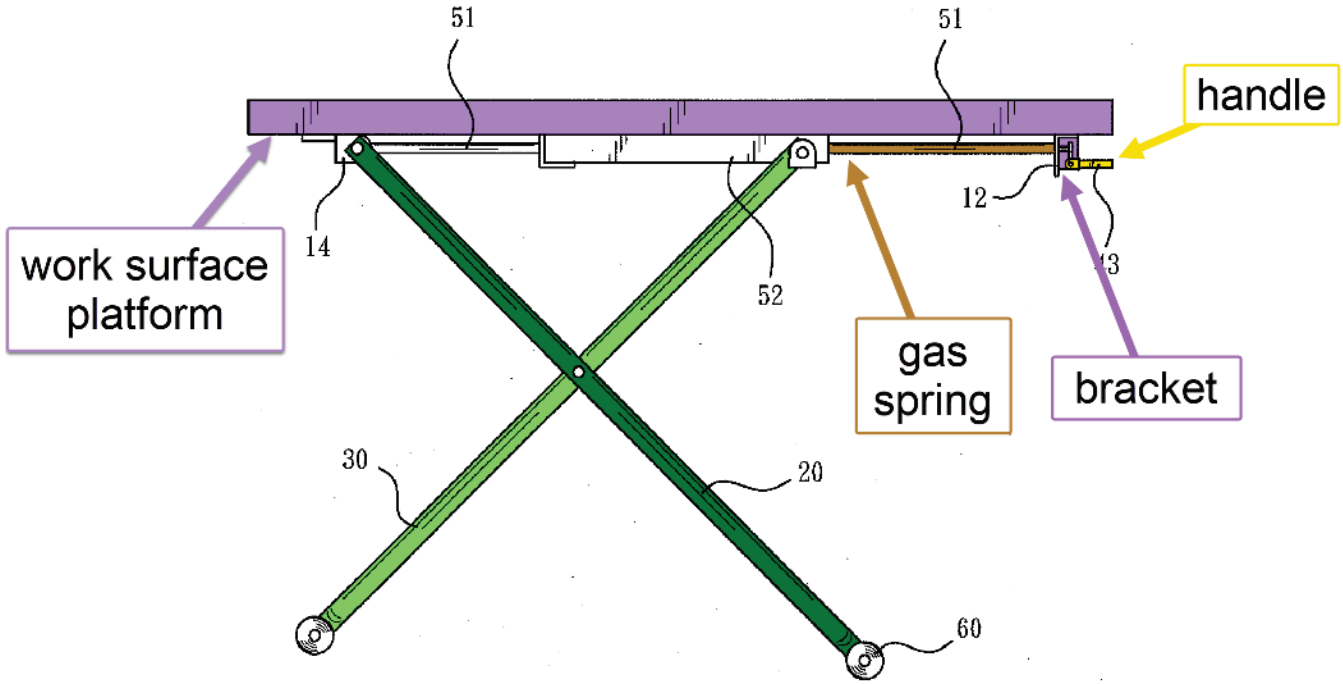

198

"The air pressure bar 40 is fixed between the first fastener 11 and the second fastener 12, and positioned at the middle of the pivot joint 31. The air pressure bar 40 possesses a rod body 41 and a stretching rod 42, wherein the end of the stretching rod 42 is fixed between two side connecting pieces 15 of the second fastener 12." Huang 0018

As shown above, one end of the gas spring is fixed to the work surface platform via a bracket. Huang discloses a bracket (second fastener 12) which is mounted on the work surface platform. A POSITA would understand that this mounting bracket is fixed to the underside of the work surface platform. As discussed previously, a POSITA would have been motivated to connect the locking gas spring of Huang in view of Clarke in such a way that the handle would on the work surface platform for the convenience of the user. As discussed previously, this will provide for greater ease of use for the adjustment mechanism.

[198] Huang, Figure 5, Annotated

18P. A desktop workspace that adjusts vertically, comprising:	**YES:** See element 1P.
18a. a work surface platform;	**YES:** See element 1a.
18b. a slidable tray selectively positionable between a stored position under the work surface platform and an extended position that is outward and lowered with respect to the work surface platform,	**YES:** See element 1b.
18c. a base configured to sit on an existing platform; and	**YES:** See element 1c.
18d. a height adjustment mechanism connecting the work surface platform and the base, the height adjustment mechanism including:	**YES:** See element 1d.
18d1. a set of pivot arms that connect at a scissoring pivot point creating a scissoring motion when raising and lowering the work surface platform to various heights;	**YES:** See element 1d1.
18d2. a base pivot point fixed relative to the base and connecting the base and the set of pivot arms;	**YES:** See element 1d2.
18d3. a platform pivot point fixed relative to the work surface platform and connecting the work surface platform and the set of pivot arms;	**YES:** See element 1d3.
18d4. a sliding mechanism on an end of an arm of the set of pivot arms between the end of the arm and either the work surface platform or the base; and	**YES:** See element 1d4.
18d5. a gas spring that assists in elevation of the work surface platform by applying a force to rotate one of the set of pivot arms as part of the scissoring motion,	**YES:** See element 1d5.
18d6. wherein the gas spring, the set of pivot arms, the base pivot point, and the platform pivot point align side-by-side when the desktop workspace is in a fully lowered position such that the desktop workspace adjusts vertically.	**YES:** Huang in view of Clarke discloses that the gas spring, the first set of pivot arms, the base pivot point, and the platform pivot point align side-by-side when the desktop workspace is in a fully lowered position such that the desktop workspace adjusts vertically.

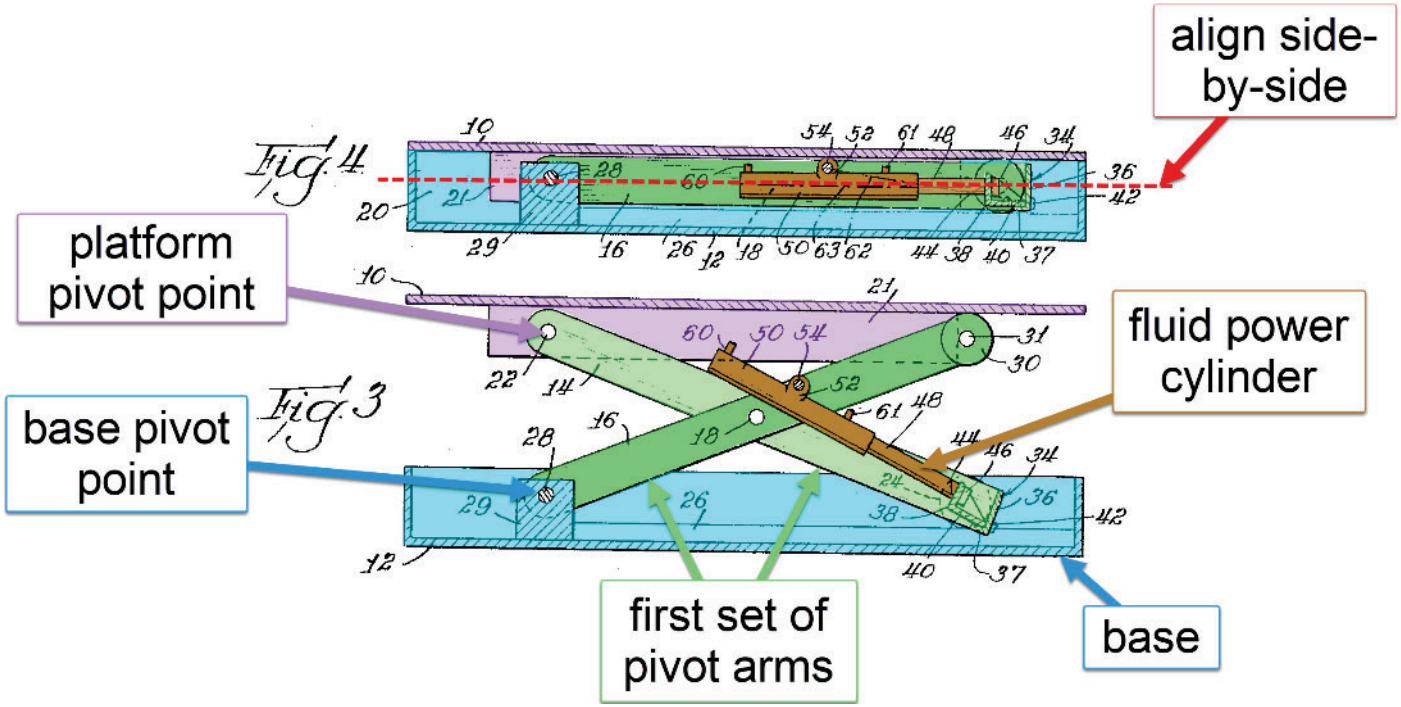

199

"Cylinder 50 has a side mounting plate 52 pivotally mounted on a rod 54. Rod 54 extends between the two opposite legs 16 to which it is connected. It is located at the side of the cylinder 50 opposite the pivotal mountings formed by studs 42. This rod 54 is at the upper side of the legs 16 above the common pivot 18 for the legs (FIGURE 4), and the mountings 52 extend downwardly. In the down position the cylinders will be entirely below the upper edges of the legs 16 to which they are connected." Clarke 2:32-41

As shown above, the Clarke linkage is arranged such that the cylinder (or a gas spring), the first set of pivot arms, the base pivot point, and the platform pivot point align side-by-side when the workspace is in a fully lowered position. As discussed previously, a POSITA would be motivated to use the linkage arrangement as taught by Clarke in the combination of Huang in view of Clarke. Consequently, the combination of Huang in view of Clarke will be configured such that the pivot arms, pivot points, and the gas spring align when in the fully collapsed or stowed position. Further, as discussed previously, a POSITA would be motivated to replace the fluid power cylinder of Clarke with the locking gas spring system of Huang. Further still, a POSITA will understand that Clarke teaches a kinematic arrangement where the piston-cylinder actuator is in flat alignment

[199] Clarke, Figure 3 & 4, Annotated

while still having some mechanical advantage with which to operate on the scissor linkage. This is afforded by the eccentric trunnion mount of the piston-cylinder arrangement of Clarke. A POSITA will recognize the advantage this will provide in the combination of Huang in view of Clarke. It will allow the locking gas spring to still provide some assistance in the lifting of the table from the fully lowered position. Thus, for at least this reason, a POSITA will be motivated to use the Clarke linkage arrangement in the combination of Huang in view of Clarke.

As shown above, Huang in view of Clarke and in further view of HJ Zottel with the knowledge of a POSITA renders obvious each and every element of the Asserted Claims of the ’926 patent. In addition to this, certain things that would be well within the ordinary knowledge and familiarity of a POSITA are also explicitly demonstrated in Drabczyk or Zhang. For at least the reasons shown above, it is my opinion that the Asserted Claims of the ’926 patent are invalid due to obviousness under 35 U.S.C §103.