US 20140041554A1

(19) United States

(12) Patent Application Publication

Huang

(10) Pub. No.: US 2014/0041554 A1

(43) Pub. Date: Feb. 13, 2014

(54) **ADJUSTABLE TABLE WITH AN ASSISTANT DEVICE**

(71) Applicant: **Hui-Ling Huang**, Taichung City (TW)

(72) Inventor: **Hui-Ling Huang**, Taichung City (TW)

(21) Appl. No.: **13/930,197**

(22) Filed: **Jun. 28, 2013**

(30) **Foreign Application Priority Data**

Aug. 7, 2012 (TW) 101215178

Publication Classification

(51) **Int. Cl.**

A47B 9/16 (2006.01)

A47B 3/02 (2006.01)

(52) **U.S. Cl.**

CPC *A47B 9/16* (2013.01); *A47B 3/02* (2013.01)

USPC **108/50.11**; 108/147

(57) **ABSTRACT**

A height-adjustable table includes a table board, a first foot, a second foot, an air pressure bar and an assistant device. The first foot crossly and pivotally connects with the second foot, wherein one end of the first foot pivotally connects with a first fastener on the bottom side of the table board, and one end of the second foot pivotally connects with a pivot joint. The assistant device is fixed between the first fastener and a second fastener, wherein one end of the air pressure bar is fixed on the second fastener while the other end fixed on the assistant device. Therefore, when the air pressure bar is operated, smooth sliding of the air pressure bar is provided, whereby the structural strength of the table is reinforced.

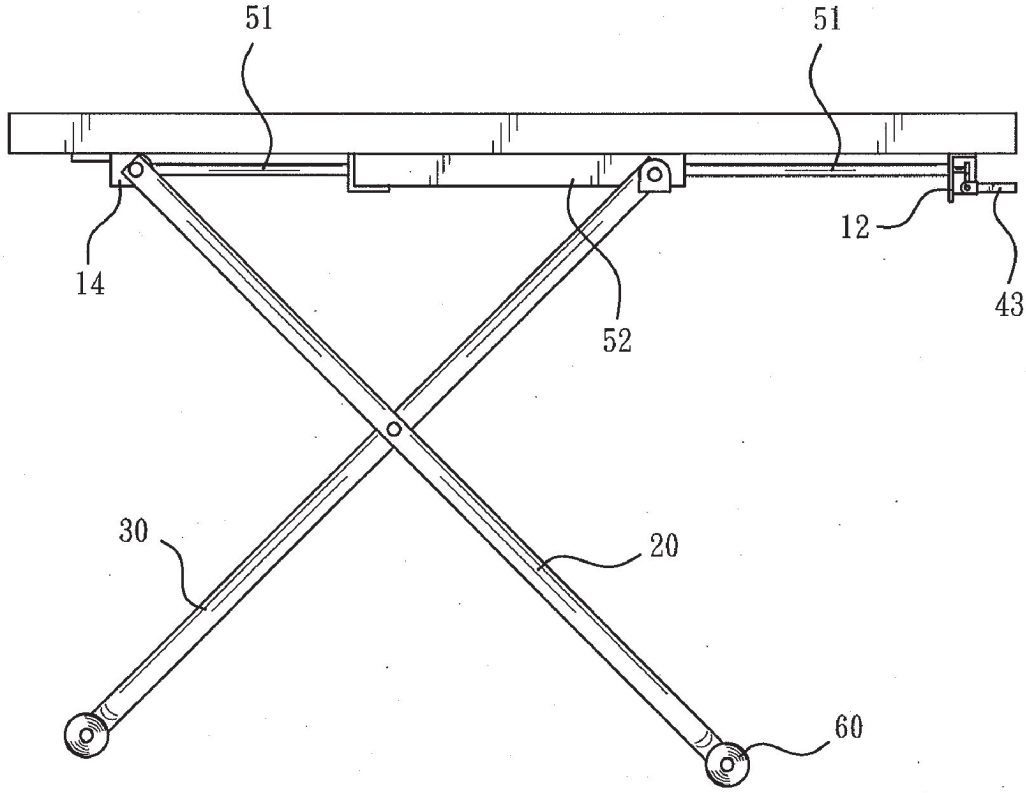

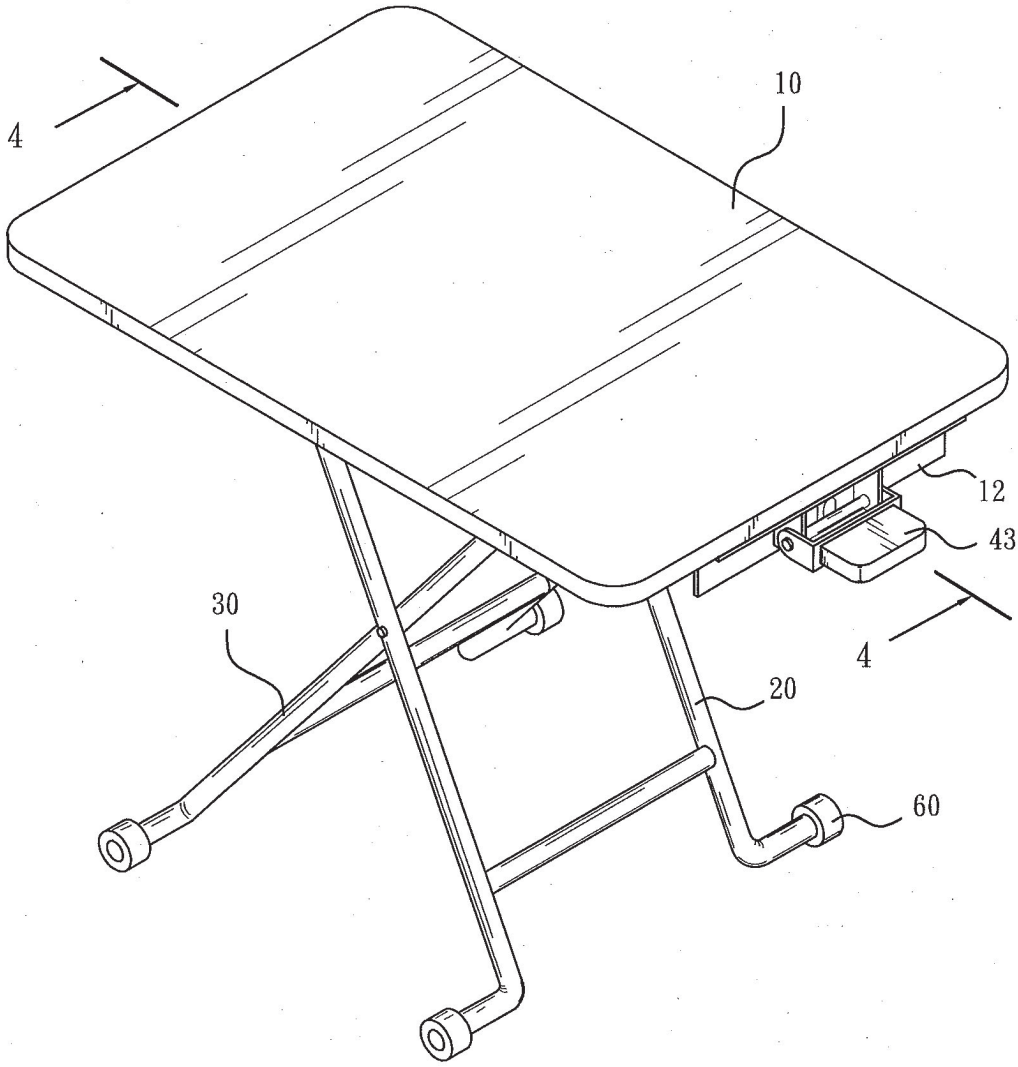

FIG. 1

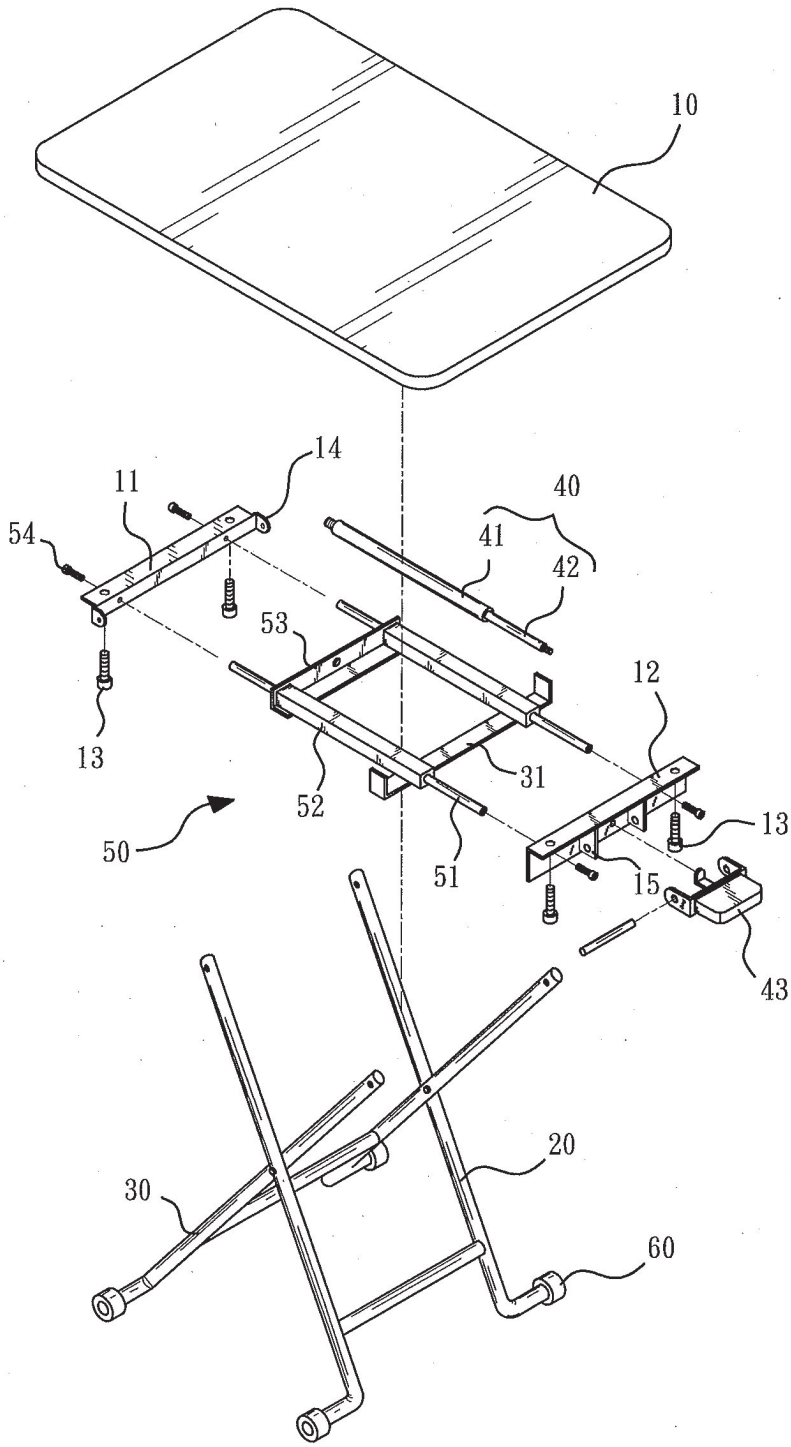

FIG. 2

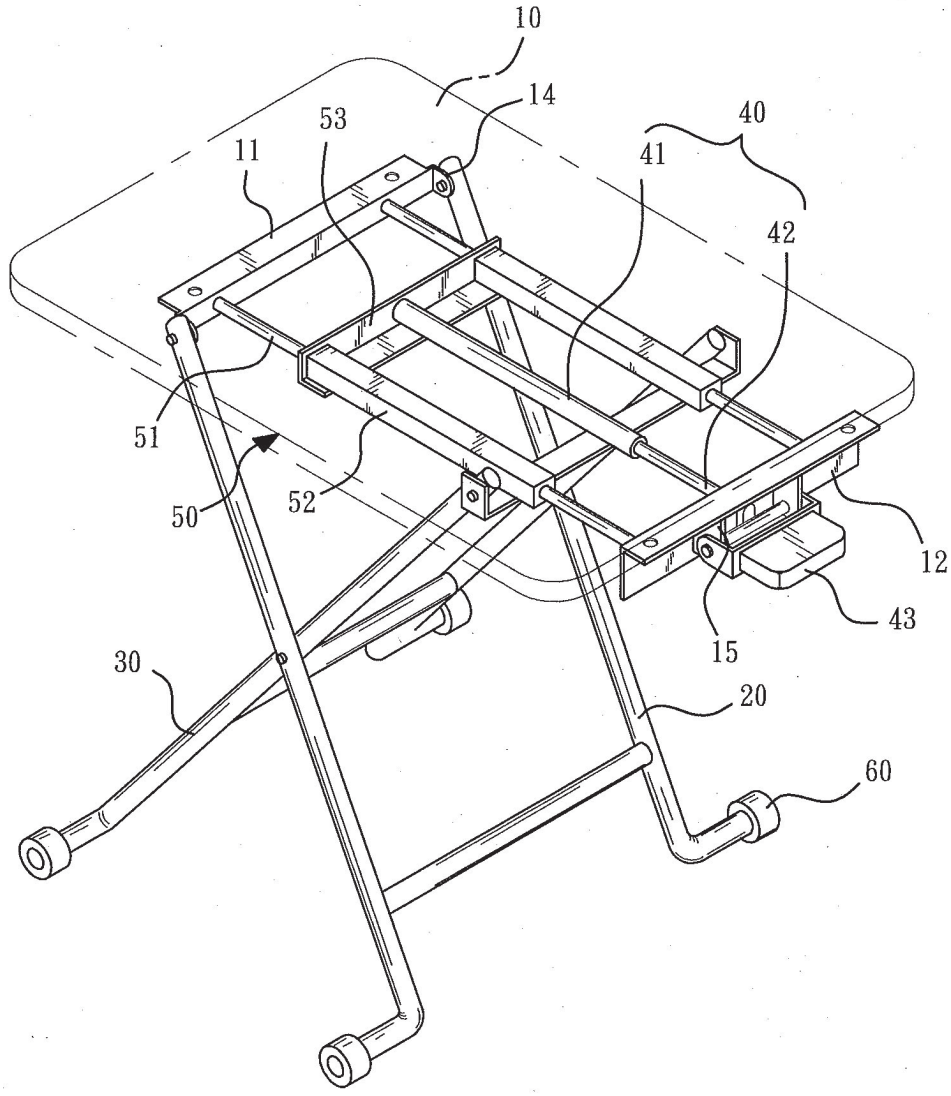

FIG. 3

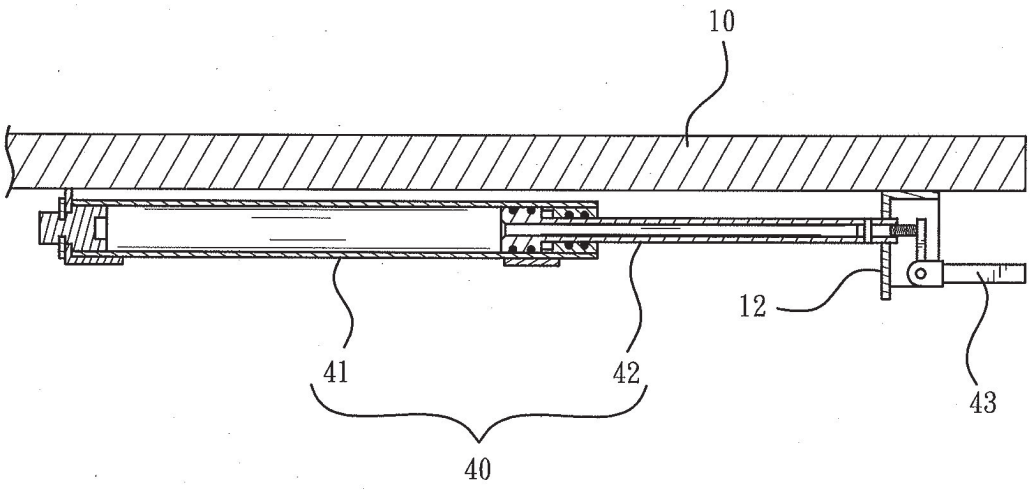

FIG. 4

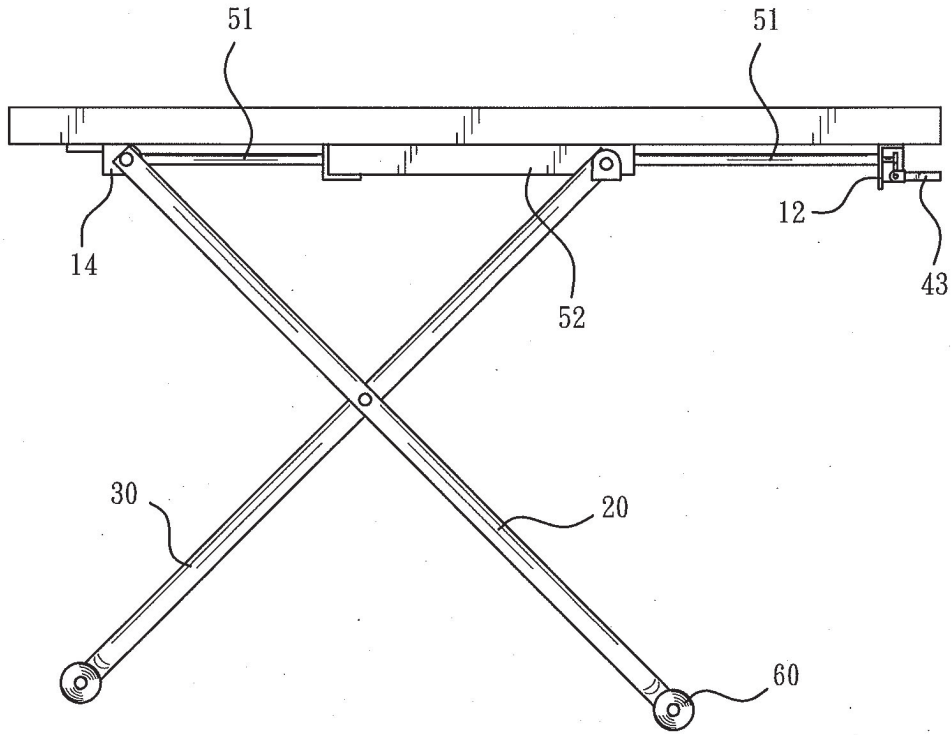

FIG. 5

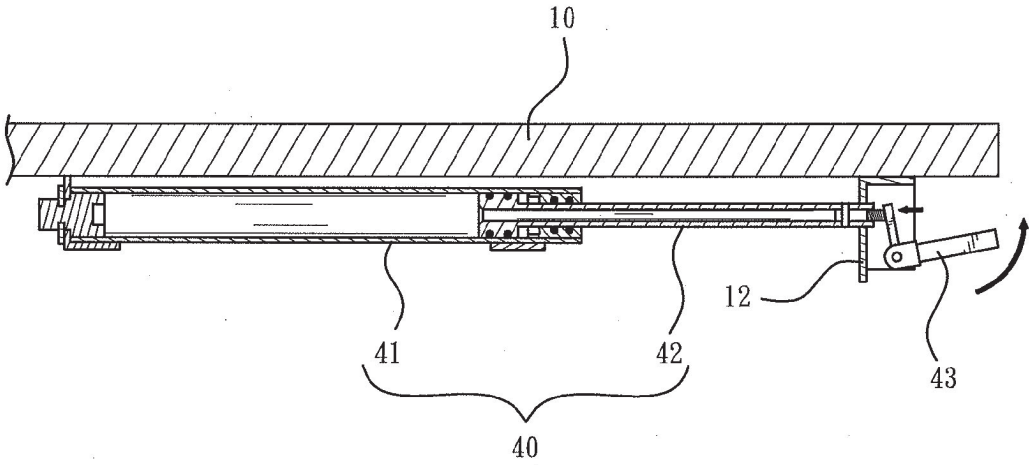

FIG. 6

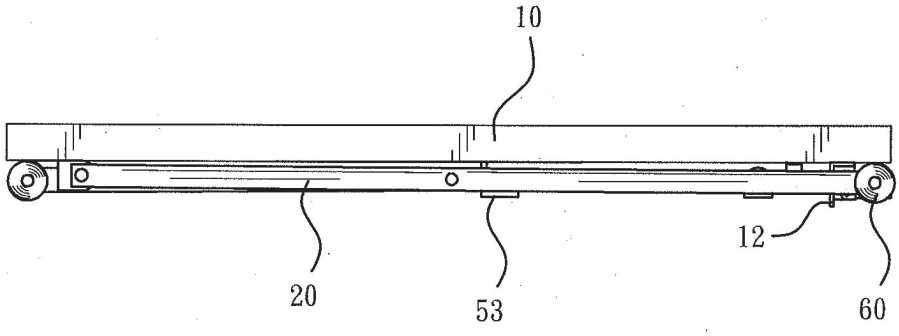

FIG. 7

ADJUSTABLE TABLE WITH AN ASSISTANT DEVICE

BACKGROUND OF THE INVENTION

[0001] 1. Field of the Invention

[0002] The present invention relates to height-adjustable tables and more particularly, to an adjustable table with an assistant device.

[0003] 2. Description of the Related Art

[0004] Commonly known structure of adjustable tables are positioned and adjusted by sliding internal and external tubes, with positioning members and a row of holes in a certain intervals, whereby height of the tables are adjusted. However, such structure possesses a problem that the alignment between the positioning member and the holes needs to be taken into consideration of the way of adjusting, thus inconvenient while operating.

[0005] Later, another adjustable table with an air pressure bar as an adjusting device was invented, wherein the air pressure bar is applied for achieving the goal of speedily and continuously adjusting. Nevertheless, the stretching and contracting direction and force of the air pressure bar might cause lateral displacement of the air pressure bar during the operation, thereby not only interfering the operation of the adjusting device, but also shortening the service life of the air pressure bar. In addition, the screws combined to the table might loose easily. Therefore, the present invention is applied for improving the abovementioned disadvantages.

SUMMARY OF THE INVENTION

[0006] To solve the abovementioned problems, the present invention provides an adjustable table with an assistant device, which utilizes an assistant device with a structure of air pressure bar in order to enable the air pressure bar to slide smoothly and reinforce the structural strength of the table.

[0007] For this objective, the present invention as an adjustable table with an assistant device comprises a table board, with a first fastener and a second fastener on the bottom side; a first foot pivotally connecting to the first fastener; a second foot pivotally connecting to the first foot; a pivot joint pivotally connecting to one end of the second foot; an air pressure bar is installed between the first fastener and the second fastener, wherein the air pressure bar possesses a stretching rod and a rod body, with one end of the stretching rod fixed on the second fastener; a lever pivotally connecting to the second fastener thereby controlling the operation of the air pressure bar; an assistant device comprising at least one sliding stick positioned between the first fastener and the second fastener; a sliding member slidely disposed around the sliding stick; and a combining piece fixed on one end of the sliding member and one end of the body of the air pressure bar simultaneously, wherein the sliding member together with the body of the air pressure bar relatively displace against the sliding stick when the air pressure bar is operated, in order to change the angle included by the first foot and the second foot, whereby height of the table is adjusted and the smooth sliding of the air pressure bar is provided; in addition, the structural strength of the table is reinforced.

BRIEF DESCRIPTION OF THE DRAWINGS

[0008] FIG. **1** is an assembled view of the present invention.

[0009] FIG. **2** is an exploded view of the present invention.

[0010] FIG. **3** is another assembled view of the present invention.

[0011] FIG. **4** is a partial sectional view of the present invention.

[0012] FIG. **5** is a side view of the present invention.

[0013] FIG. **6** is a schematic operational view of the present invention, illustrating the table being adjusted.

[0014] FIG. **7** is a schematic operational view of the present invention, illustrating the table being stored.

DETAILED DESCRIPTION OF THE INVENTION

[0015] Referring to FIGS. **1-3**, an adjustable table with an assistant device in accordance with the present invention is shown. The adjustable table with an assistant device comprises a table board **10**, a first foot **20**, a second foot **30**, an air pressure bar **40** and an assistant device **50**, wherein the middle section of the first foot **20** and the second foot **30** are pivotally connected as a cross shape, with wheels **60** installed at the end of the first foot **20** and the second foot **30**, respectively.

[0016] The bottom side of the table board **10** possesses a first fastener **11** and a second fastener **12**, wherein the first fastener **11** and the second fastener **12** are presented as a long strap shape and fixed on the bottom side of the table board **10** by several first screws **13**. Two lateral hole plates **14** are settled at both ends of the first fastener **11** to pivotally connect with the top end of the first foot **20**, and a couple of side connecting pieces **15** are settled on the outer-middle side of the second fastener.

[0017] A pivot joint **31** is pivotally connected at the top end of the second foot **30** and positioned between the first fastener **11** and the second fastener **12**.

[0018] The air pressure bar **40** is fixed between the first fastener **11** and the second fastener **12**, and positioned at the middle of the pivot joint **31**. The air pressure bar **40** possesses a rod body **41** and a stretching rod **42**, wherein the end of the stretching rod **42** is fixed between two side connecting pieces **15** of the second fastener **12**.

[0019] A lever **43** is pivotally connected to the side connecting piece **15** of the second fastener **12**, thereby operating the air pressure bar **40** in order to make the air pressure bar **40** stretch or shorten.

[0020] The assistant device **50** possesses two parallel sliding sticks **51**, two sliding members **52** and one combining piece **53**. The sliding sticks **51** are screwed between the first fastener **11** and the second fastener **12** by several second screws **54**, whereby the whole structure of the table is reinforced and unlikely to be bent or deformed. The two sliding members **52** are slidely disposed around the two sliding sticks **51**, and the combining piece **53** is positioned between the two sliding members **52**, wherein one end of the rod body **41** is fixed on the combining piece **53** and between the two sliding members **52**.

[0021] When the air pressure bar **40** is being operated, the sliding members **52** together with the rod body **41** of the air pressure bar **40** relatively displace against the sliding sticks **51**, thereby changing the angle included by the first foot **20** and the second foot **30**, in order to adjust the height of the table.

[0022] Specifically, based on the same principle, the sliding sticks **51** and the sliding members **52** of the present invention are in a set of two identical units, while the same effect is also allowed to be achieved with the use of only one sliding stick **51** and one sliding member **52**.

[0023] FIG. **4** is a partial sectioned view of the present invention, displaying that one end of the stretching rod **42** of the air pressure bar **40** is settled with the second fastener **12**, and one end of the rod body **41** of the air pressure bar **40** is settled and positioned on the combining piece **53**, whereby the air pressure bar **40** is operated to stretch or shorten by the lever **43**; in addition, while the air pressure bar **40** is being operated, the stretching rod **42** is sliding smoothly against the rod body **41**, whereby the deviation is prevented and further lower the lateral force received by the air pressure bar **40**, thereby extending the service life of the air pressure bar **40**.

[0024] FIG. **5** is a side view of the present invention, showing that the first foot **20** and the second foot **30** of the present invention are pivotally connected as a cross shape to fully expand the table so that the table board **10** is parallel to the floor, and the wheels **60** are installed at the bottom ends of the first foot **20** and the second foot **30**, thereby offering the function of conveniently moving.

[0025] FIG. **6** is a schematic operational view of the present invention, illustrating that while desiring to store the table, user only needs to lift the lever **43** to push the bottom end of the stretching rod **42**, thereby adjusting the corresponding opposite movement between the stretching rod **42** and the rod body **41**, in order to adjust the height of the table.

[0026] FIG. **7** is a schematic operational view of the present invention, illustrating the table being stored. Executing the aforementioned operation, the table presents a flat volume after adjustment, whereby the table is allowed to be stored in a relatively narrow space such as the space under a bed or a sofa, in order to achieve the objective of saving space.

[0027] In conclusion, the table of the present invention enables the sliding members to slide with the help of the assistant device, and fixes the combining piece between the two sliding members, thereby offering the function of smoothly sliding to the air pressure bar when operated, and reinforcing the whole structural strength of the table, together with the benefit of increasing the service life of the air pressure bar.

[0028] Although a particular embodiment of the invention has been described in detail for purposes of illustration, various modifications and enhancements may be made without departing from the spirit and scope of the invention. Accordingly, the invention is not to be limited except as by the appended claims.

What is claimed is:

1. An adjustable table with an assistant device comprising:

a table board, with a first fastener and a second fastener on bottom side;

a first foot with one end pivotally connected to the first fastener;

a second foot pivotally connected with the first foot;

a pivot joint pivotally connected to one end of the second foot;

an air pressure bar installed between the first fastener and the second fastener, possessing a stretching rod and a rod body, wherein the bottom end of the stretching rod is fixed on the second fastener;

a lever pivotally connected to one end of the second foot, thereby controlling the operation of the air pressure bar;

an assistant device, possessing at least one sliding stick installed between the first fastener and the second fastener, one sliding member slidely disposed around the sliding stick, and a combining piece installed on one end of the sliding member and fixed with one end of the rod body of the air pressure bar;

wherein the sliding member together with the rod body of the air pressure bar displace corresponding to the sliding stick when the air pressure bar is operated, in order to change the angle included by the first foot and the second foot and further adjust height of the table.

2. An adjustable table with an assistant device of claim **1**, wherein the assistant device comprises another sliding stick and another sliding member slidely disposed on the sliding stick, and the combining piece is positioned between the two sliding members.

3. An adjustable table with an assistant device of claim **2**, wherein two ends of the two sliding sticks are screwed on the first fastener and the second fastener, respectively.

4. An adjustable table with an assistant device of claim **2**, wherein the air pressure bar is installed between the two sliding members.

5. An adjustable table with an assistant device of claim **1**, wherein the first fastener has two lateral hole plates for one end of the first foot to be pivotally connected to.

6. An adjustable table with an assistant device of claim **1**, wherein several wheels are installed on bottom ends of the first foot and the second foot, respectively.

* * * * *