US008803214B2

(12) **United States Patent**
Tang et al.

(10) **Patent No.: US 8,803,214 B2**
(45) **Date of Patent: Aug. 12, 2014**

(54) **THREE DIMENSIONAL MEMORY AND METHODS OF FORMING THE SAME**

(75) Inventors: **Sanh D. Tang**, Boise, ID (US); **John K. Zahurak**, Eagle, ID (US)

(73) Assignee: **Micron Technology, Inc.**, Boise, ID (US)

(*) Notice: Subject to any disclaimer, the term of this patent is extended or adjusted under 35 U.S.C. 154(b) by 312 days.

(21) Appl. No.: **12/825,211**

(22) Filed: **Jun. 28, 2010**

(65) **Prior Publication Data**

US 2011/0316063 A1 Dec. 29, 2011

(51) **Int. Cl.**

H01L 27/06	(2006.01)
H01L 27/10	(2006.01)
H01L 27/115	(2006.01)
H01L 29/66	(2006.01)

(52) **U.S. Cl.**
USPC **257/314**; 257/316; 365/185.26

(58) **Field of Classification Search**
USPC 257/314, E21.602, E29.255, E21.001; 438/128, 309; 365/189.11
See application file for complete search history.

(56) **References Cited**

U.S. PATENT DOCUMENTS

2007/0057310	A1 *	3/2007	Matsui et al.	257/314
2009/0014858	A1 *	1/2009	Boon et al.	257/686
2009/0230454	A1 *	9/2009	Pekny	257/319

OTHER PUBLICATIONS

Kim, Jiyoung, et al., "Novel 3-D structure for ultra high density flash memory with VRAT (Vertical-Recess-Array-Transistor) and PIPE (Planarized Integration on the same PlanE)", 2008 Symposium on VLSI Technology, (Jun. 17-19, 2008), 122-23.

Komori, et al., "Disturbless flash memory due to high boost efficiency on BiCS structure and optimal memory film stack for ultra high density storage device", Electron Devices Meeting, 2008. IEDM 2008. IEEE International, (2008), 851-4.

Tanaka, H., et al., "Bit Cost Scalable Technology with Punch and Plug Process for Ultra High Density Flash Memory", IEEE Symposium on VLSI Technology, (2007), 14-15.

* cited by examiner

Primary Examiner — Olik Chaudhur
Assistant Examiner — Wilner Jean Baptiste
(74) *Attorney, Agent, or Firm* — Schwegman, Lundberg & Woessner, P.A.

(57) **ABSTRACT**

Some embodiments include a memory device and methods of forming the memory device. One such memory device includes a first group of memory cells, each of the memory cells of the first group being formed in a cavity of a first control gate located in one device level of the memory device. The memory device also includes a second group of memory cells, each of the memory cells of the second group being formed in a cavity of a second control gate located in another device level of the memory device. Additional apparatus and methods are described.

21 Claims, 38 Drawing Sheets

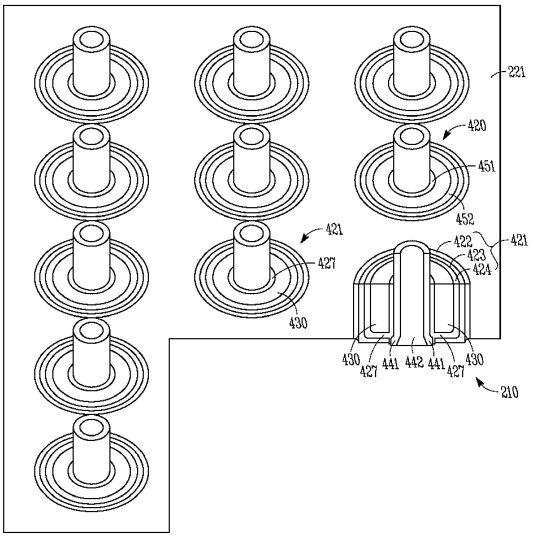

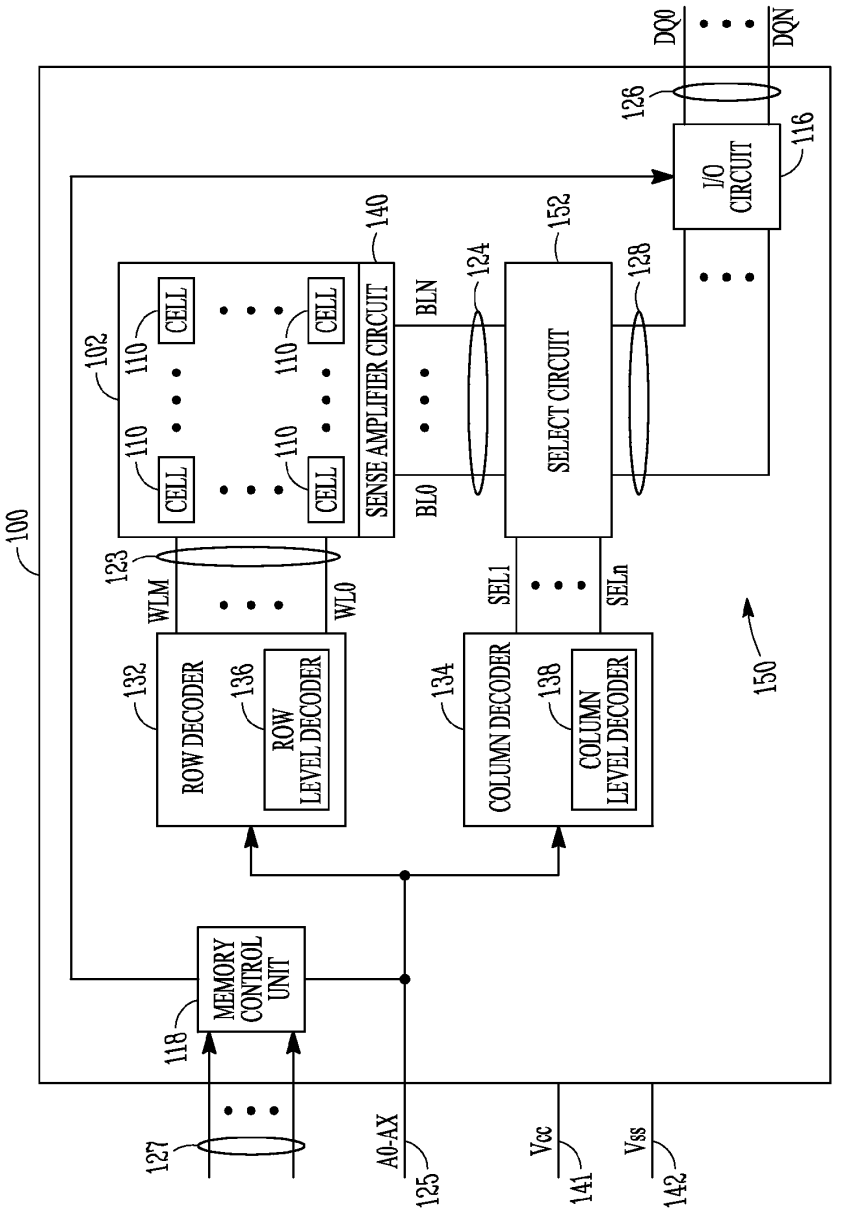
100
102
CELL
110
SENSE AMPLIFIER CIRCUIT
140
BLN
BL0
124
SELECT CIRCUIT
152
128
I/O CIRCUIT
116
126
DQ0
DQN
123
WLM
WL0
SEL1
SELn
ROW DECODER
132
ROW LEVEL DECODER
136
COLUMN DECODER
134
COLUMN LEVEL DECODER
138
150
MEMORY CONTROL UNIT
118
127
A0-AX
125
Vcc
141
Vss
142

FIG. 1

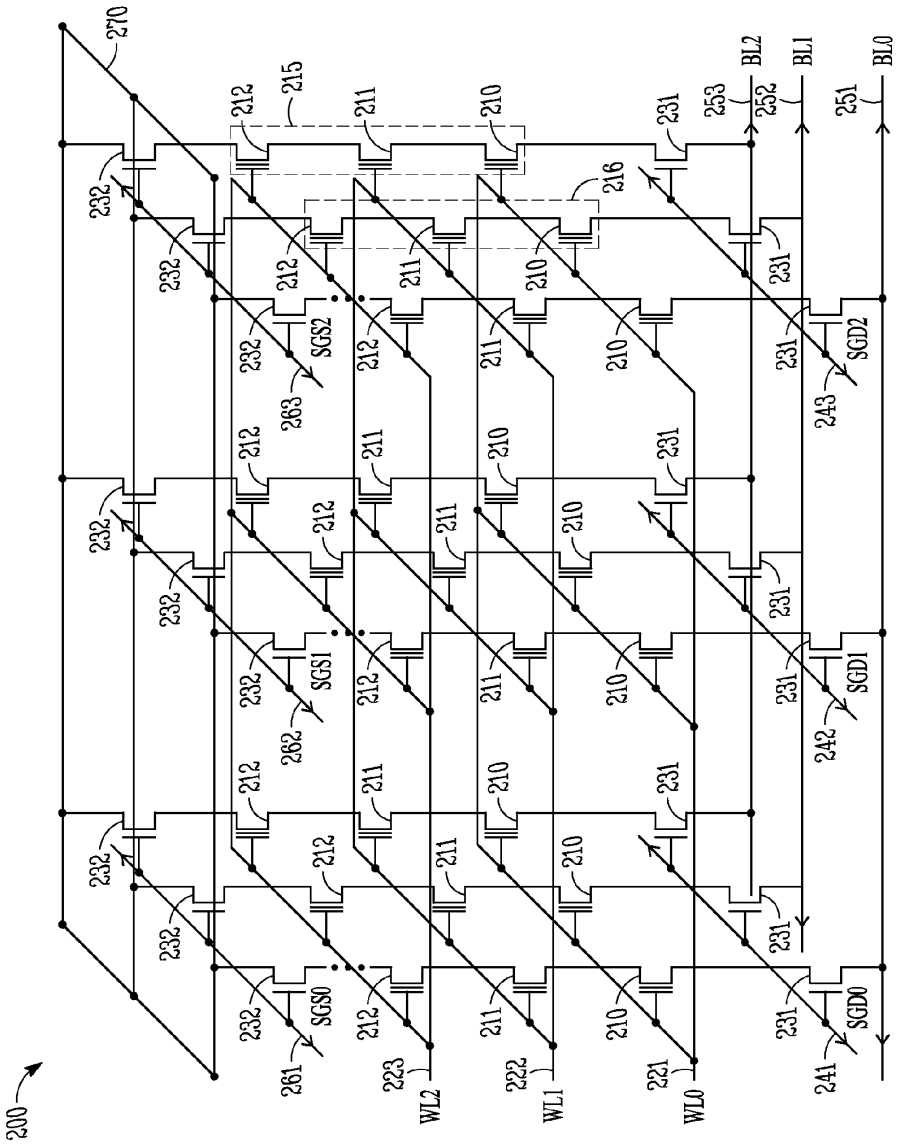
200
270
215
216
212
211
210
231
232
253
252
251
BL2
BL1
BL0
SGS2
SGS1
SGS0
SGD2
SGD1
SGD0
263
262
261
243
242
241
223
222
221
WL2
WL1
WL0

FIG. 2

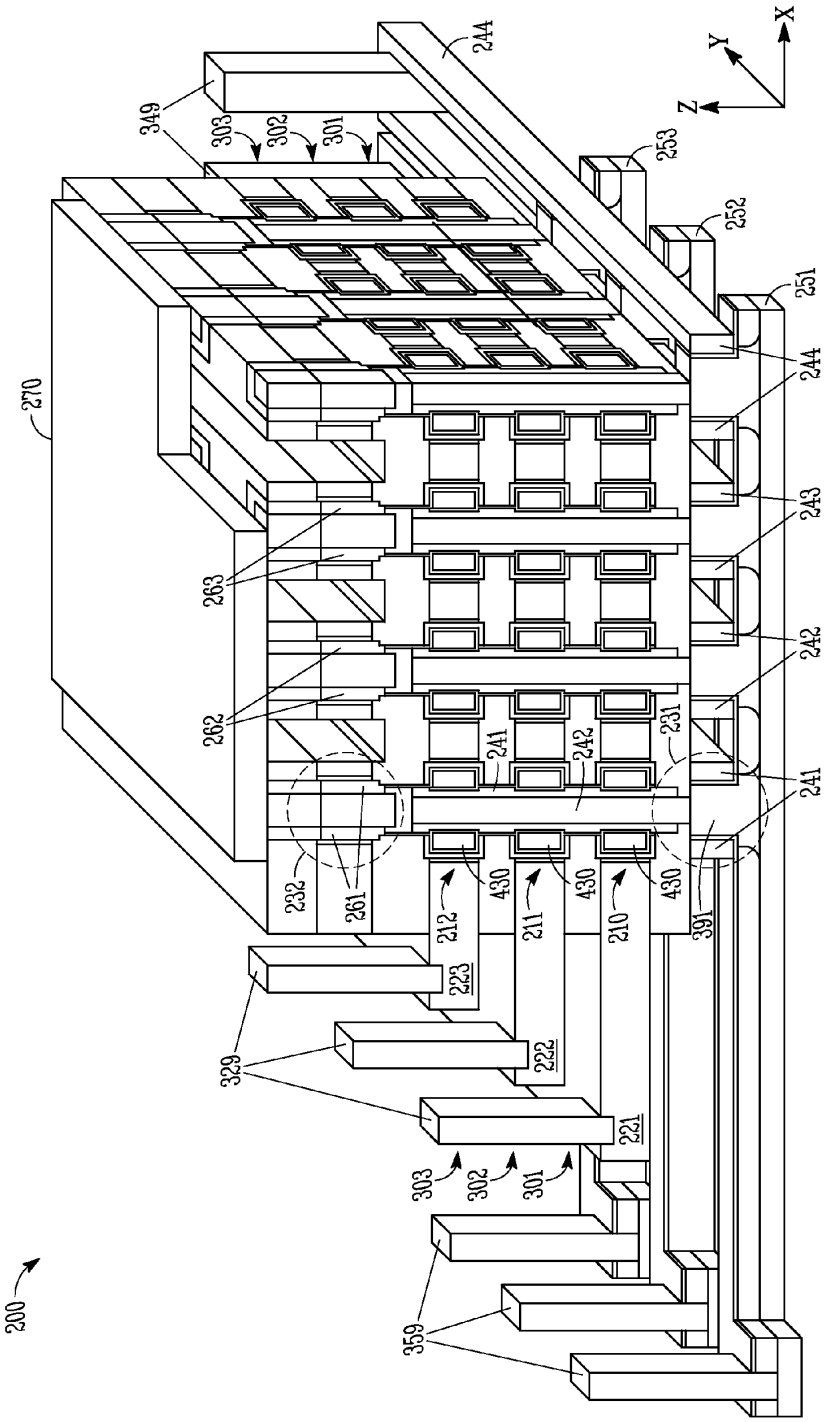
200
270
349
303
302
301
244
253
252
251
X
Y
Z
263
262
232
261
241
242
231
212
211
210
430
391
223
222
221
329
359

FIG. 3

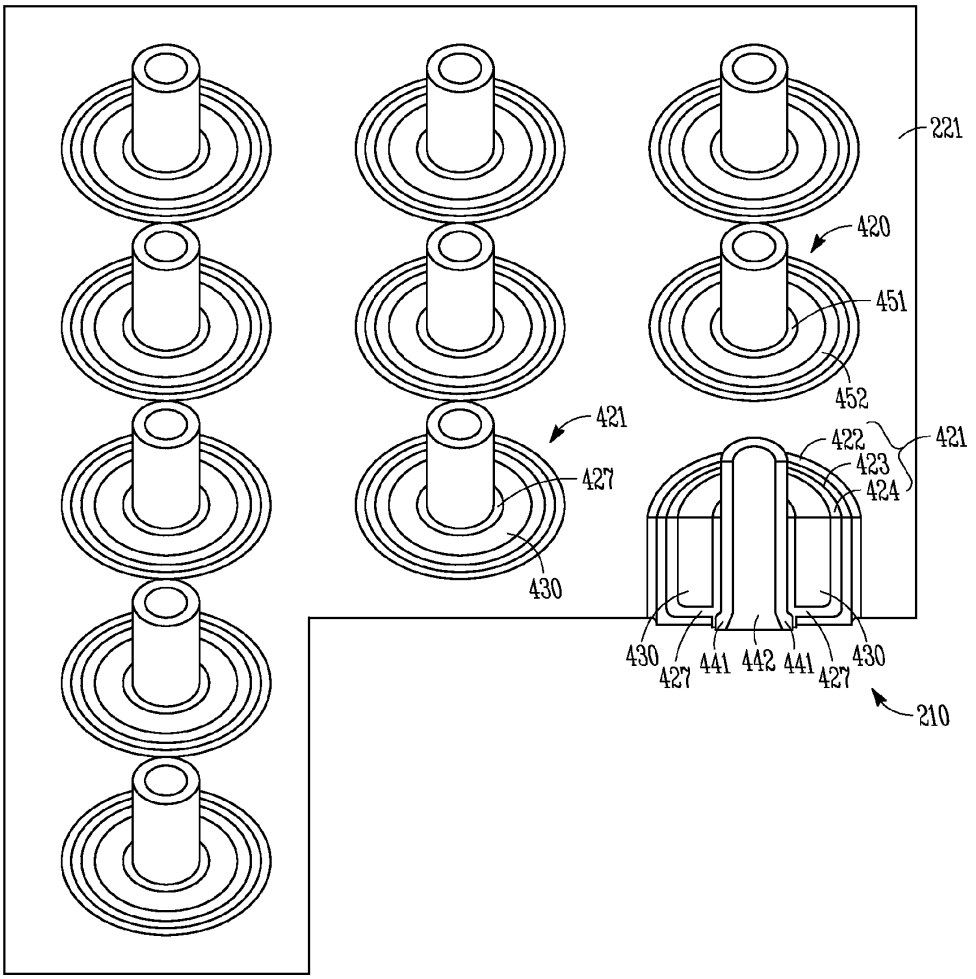
221
420
451
452
421
422
423
424
421
427
430
430
427
441
442
441
427
430
210

FIG. 4

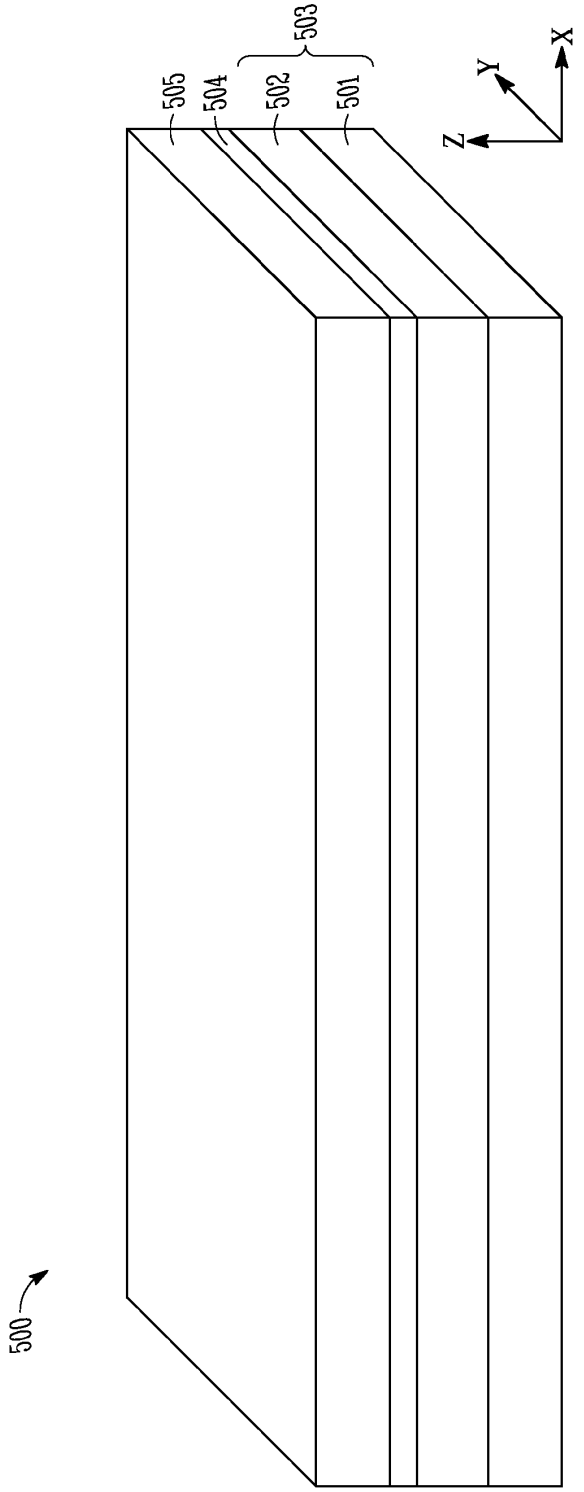

FIG. 5

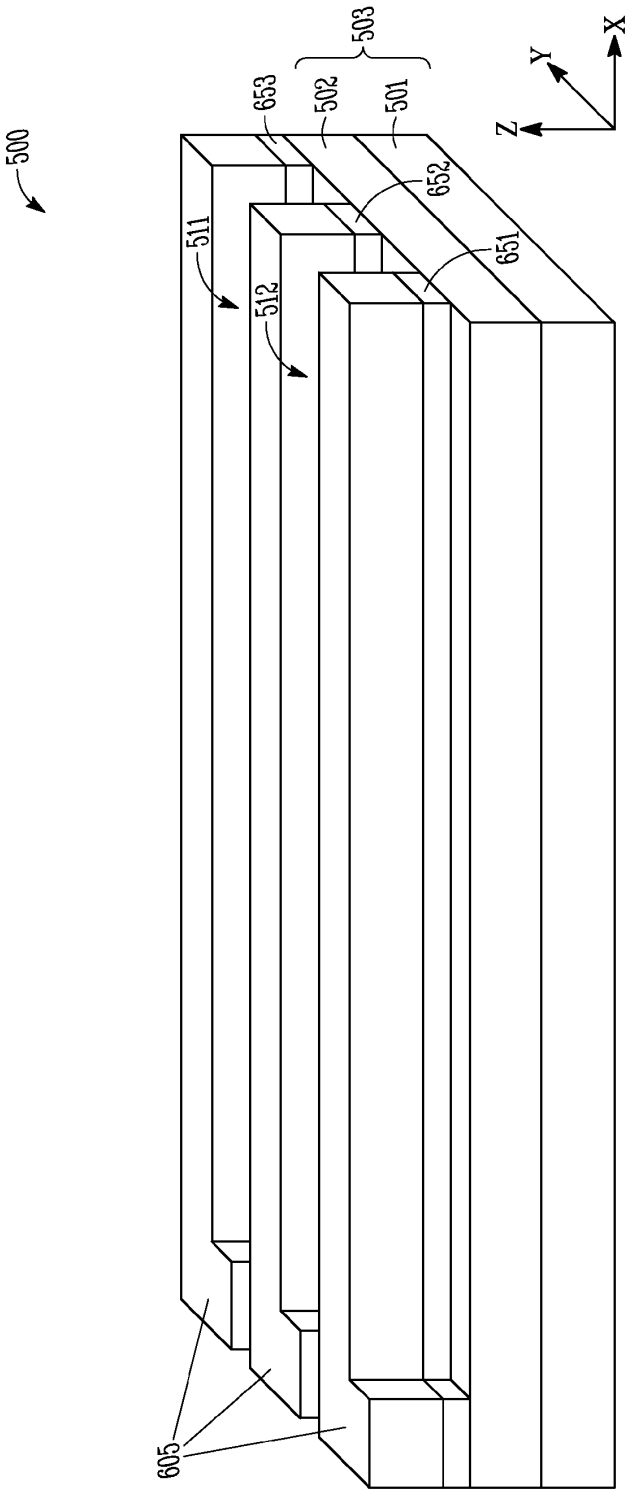

FIG. 6

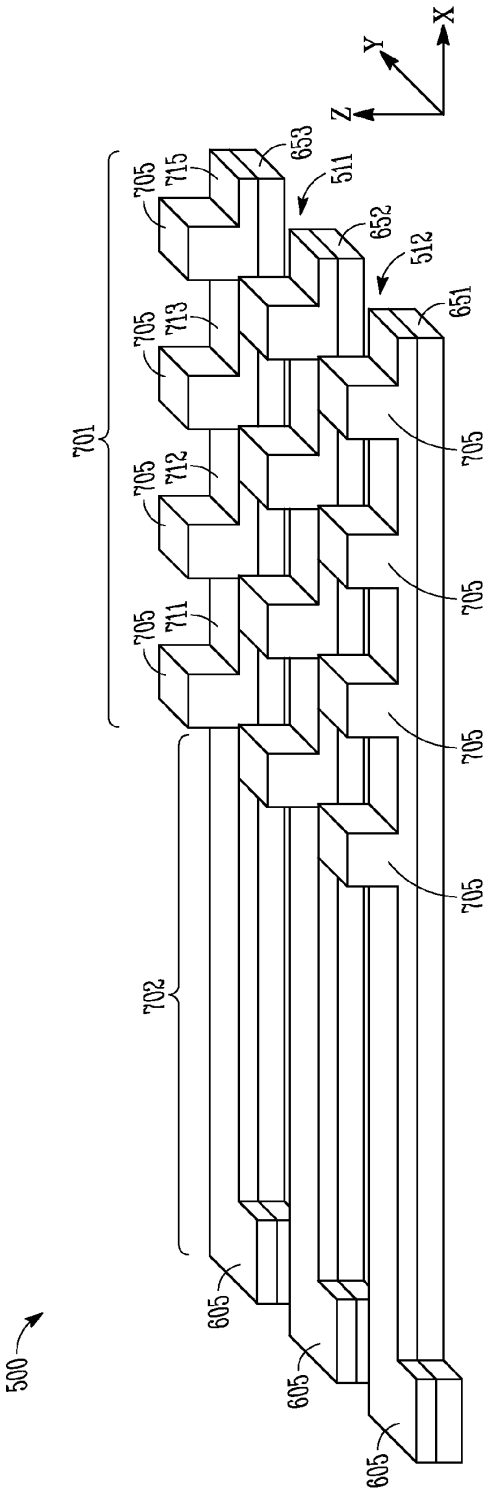

FIG. 7

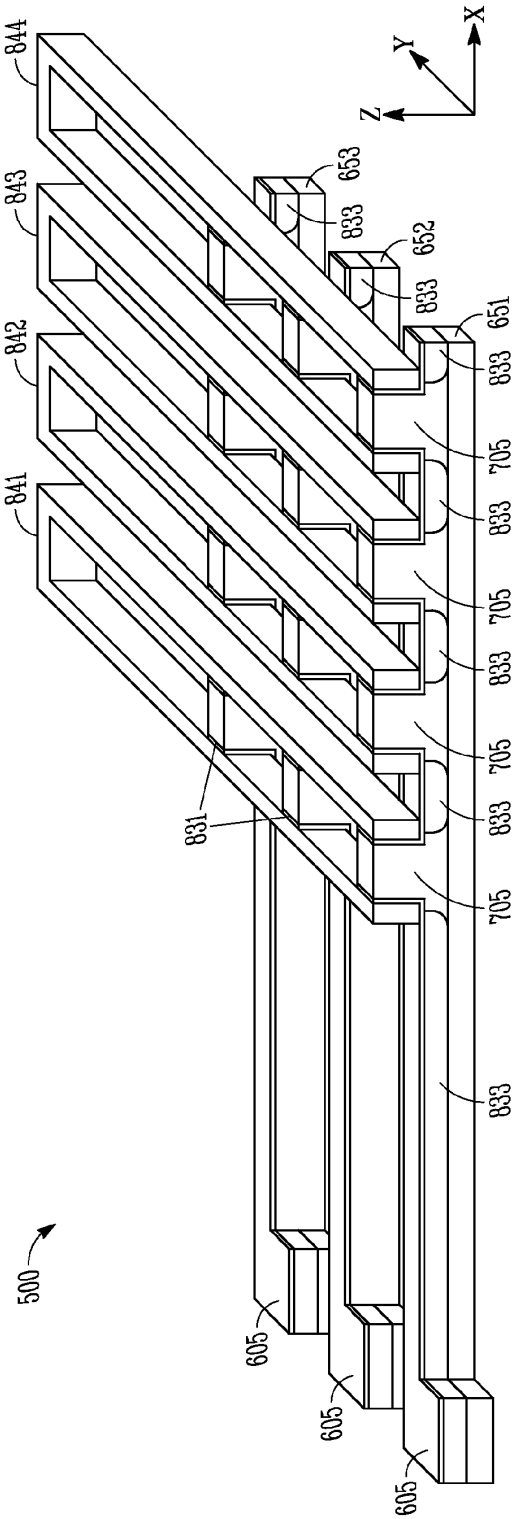
844
843
842
841
653
833
652
833
651
833
705
833
705
833
705
833
705
833
831
500
605
605
605
Z
Y
X

FIG. 8

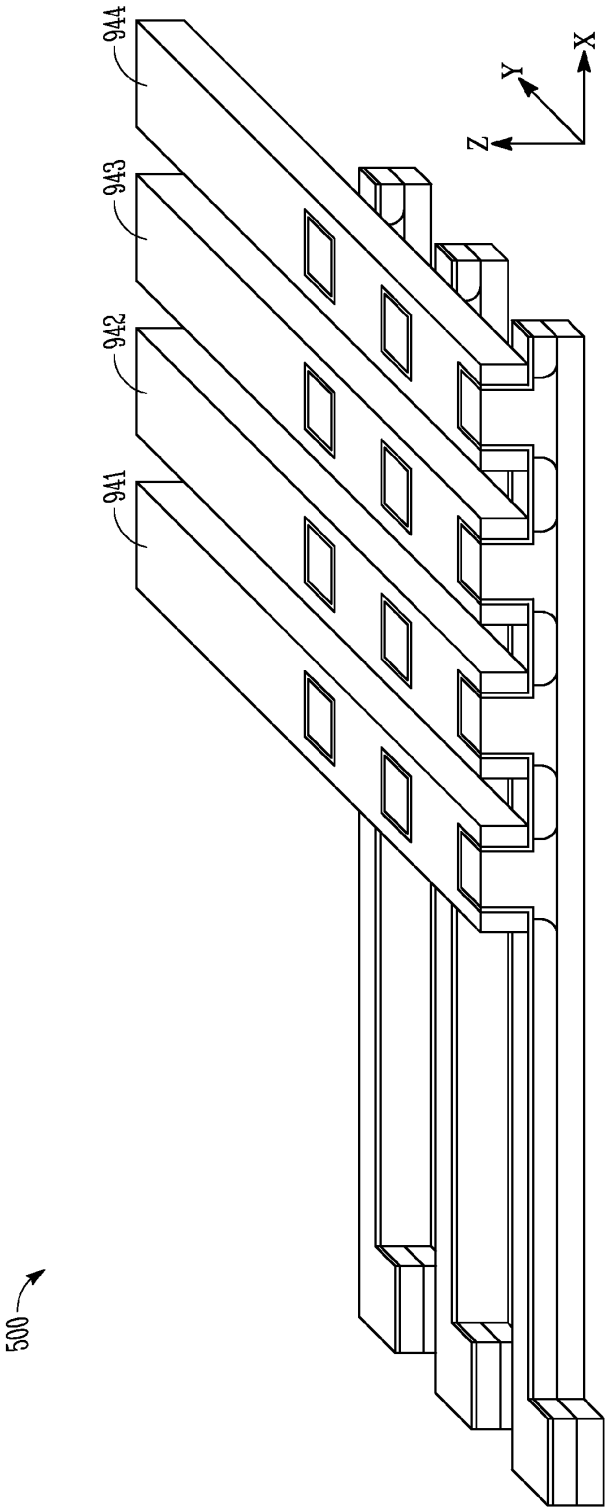

FIG. 9

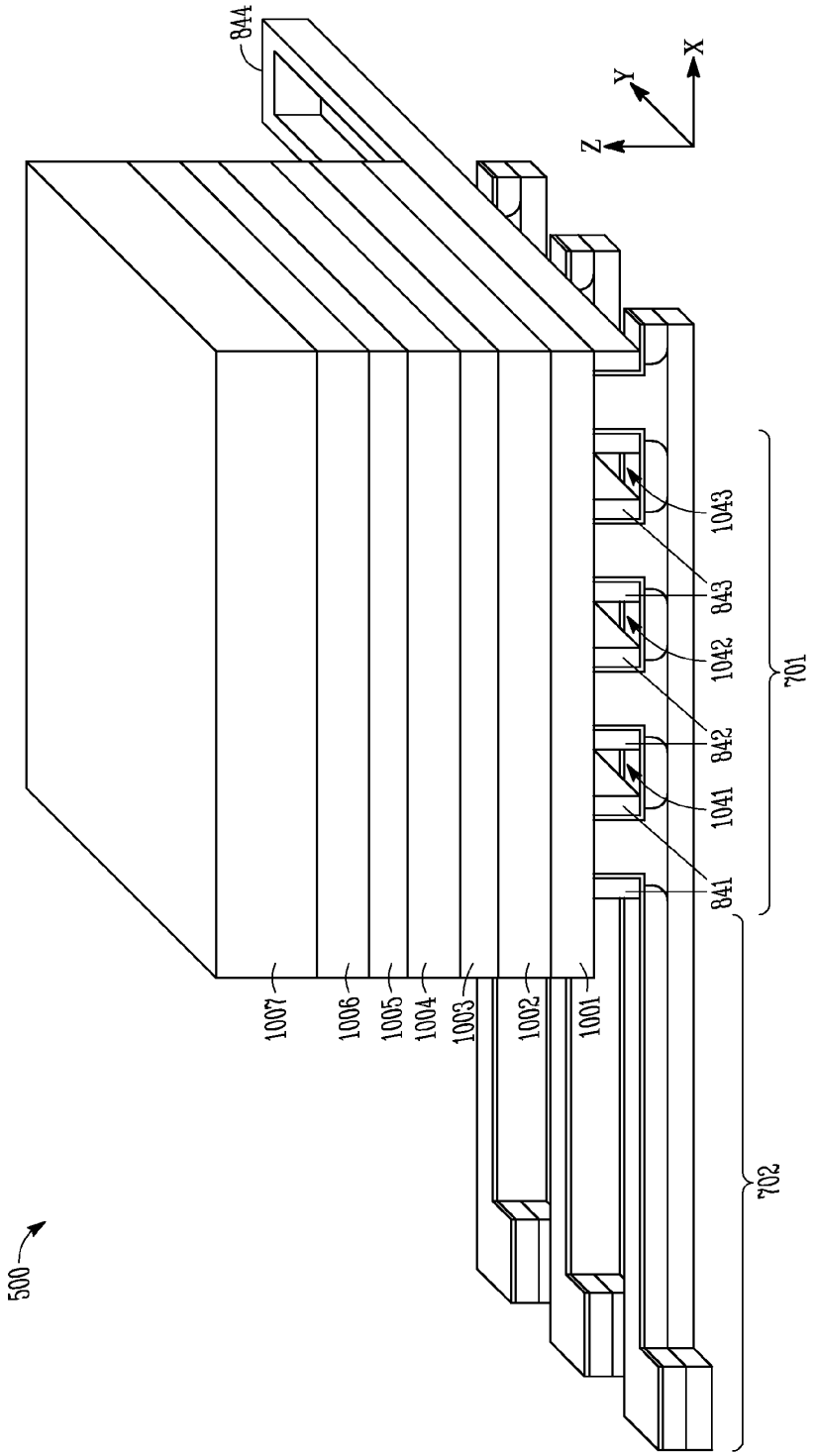
844
Z
Y
X
1043
843
1042
842
1041
841
701
1007
1006
1005
1004
1003
1002
1001
702
500

FIG. 10

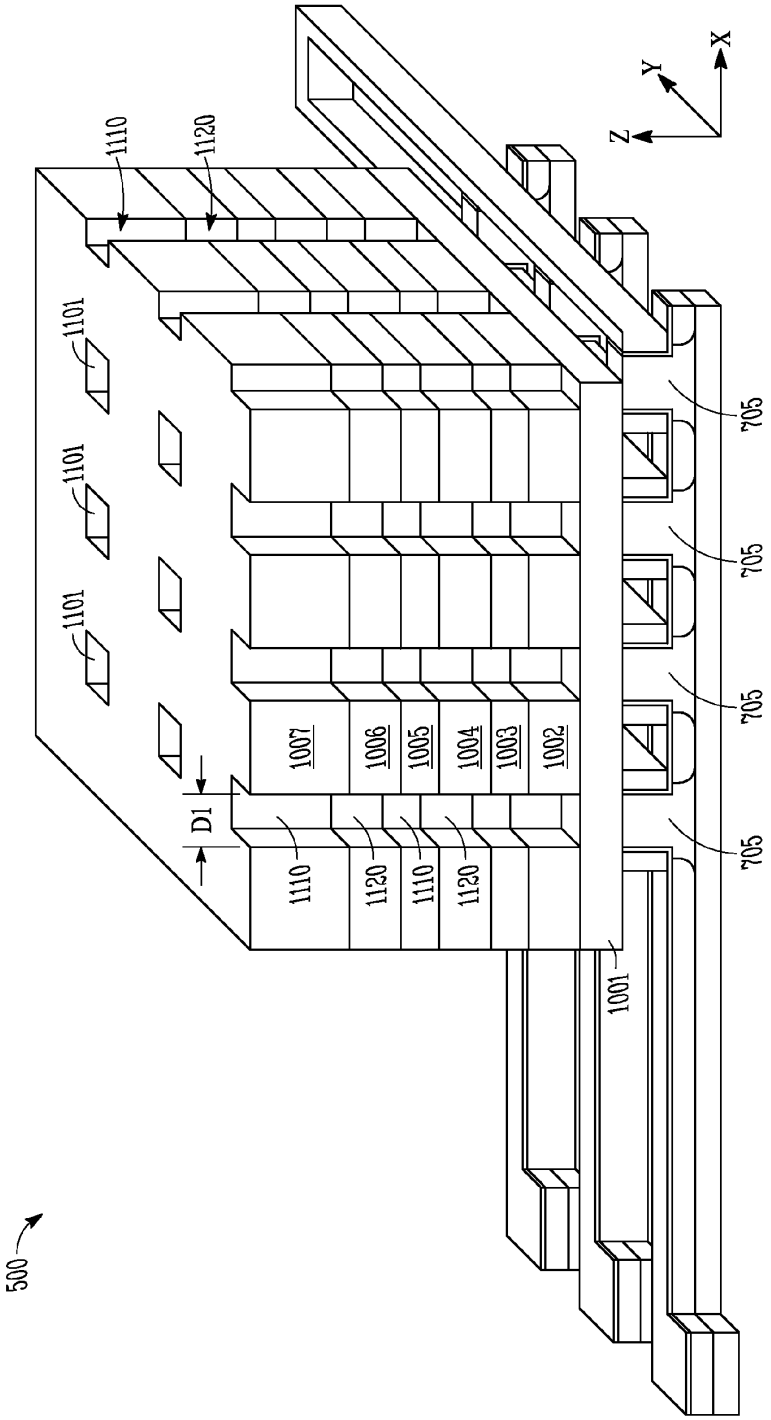
500
1110
1120
1101
1101
1101
1007
1006
1005
1004
1003
1002
D1
1110
1120
1110
1120
1001
705
705
705
705
Z
Y
X

FIG. 11

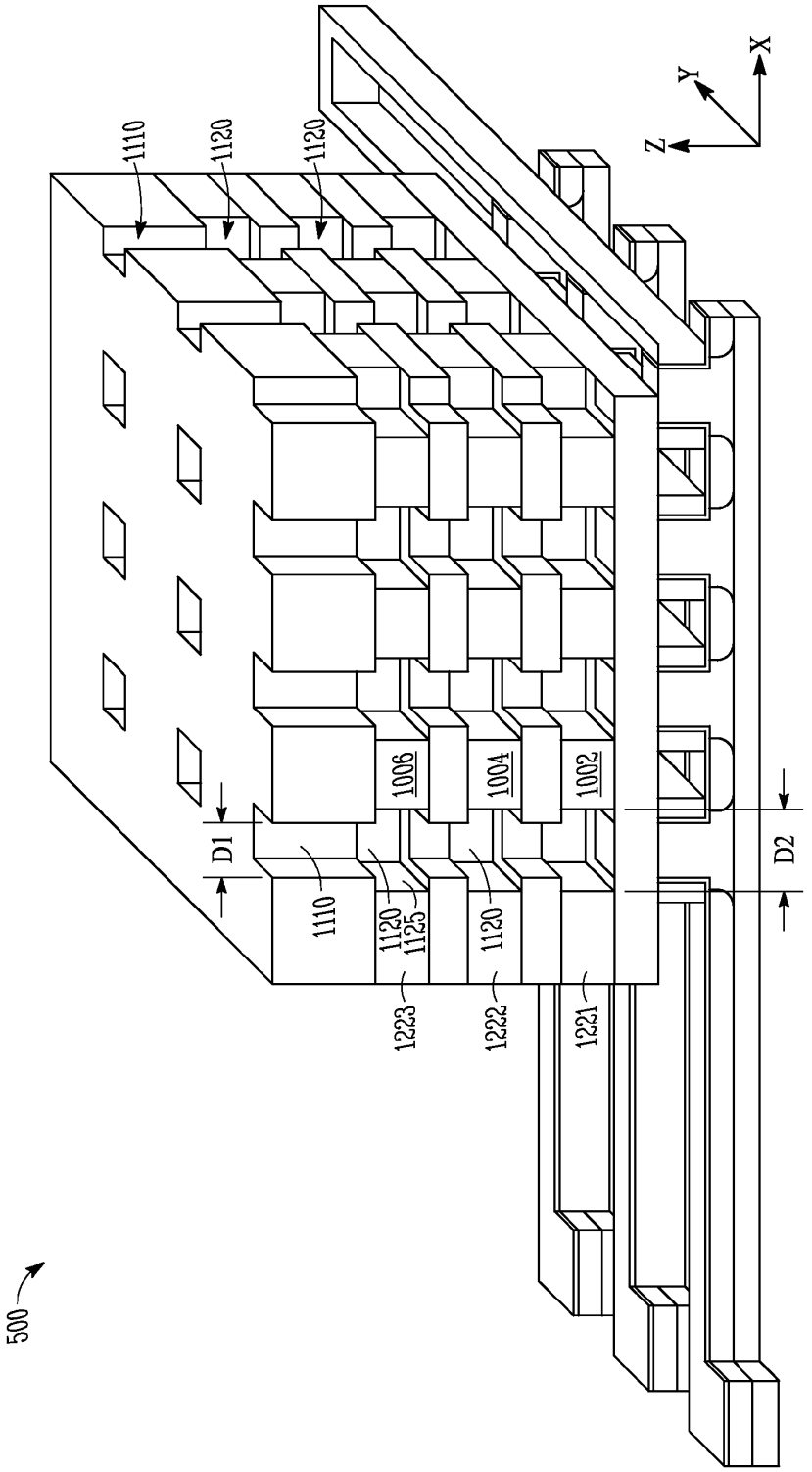
1110
1120
1120
Z
Y
X
1006
1004
1002
D1
D2
1110
1120
1125
1120
1223
1222
1221
500

FIG. 12

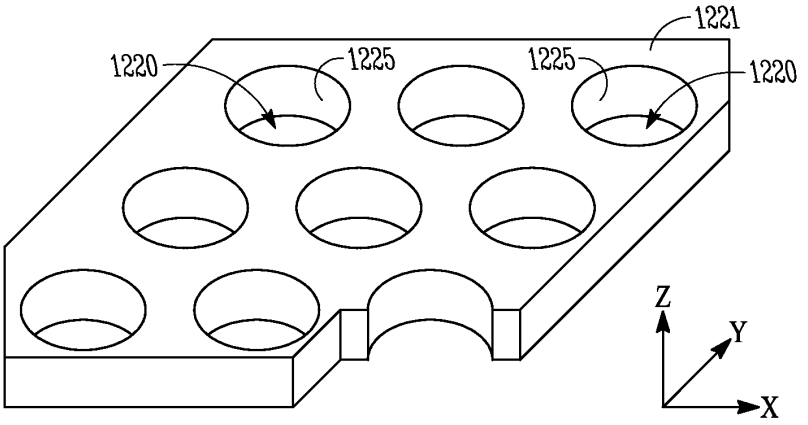

FIG. 13

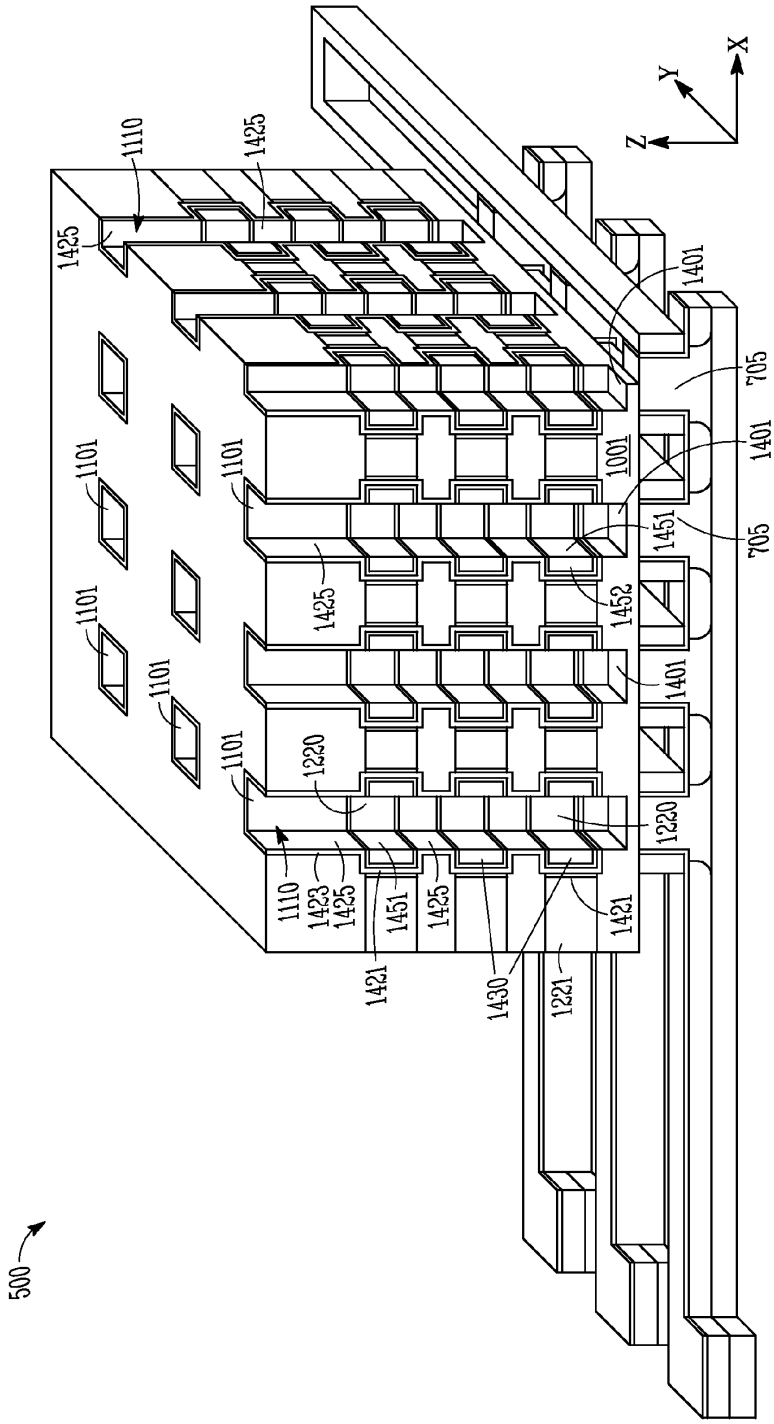
500
1110
1425
1101
1401
705
1001
1451
1452
1220
1423
1421
1430
1221
X
Y
Z

FIG. 14

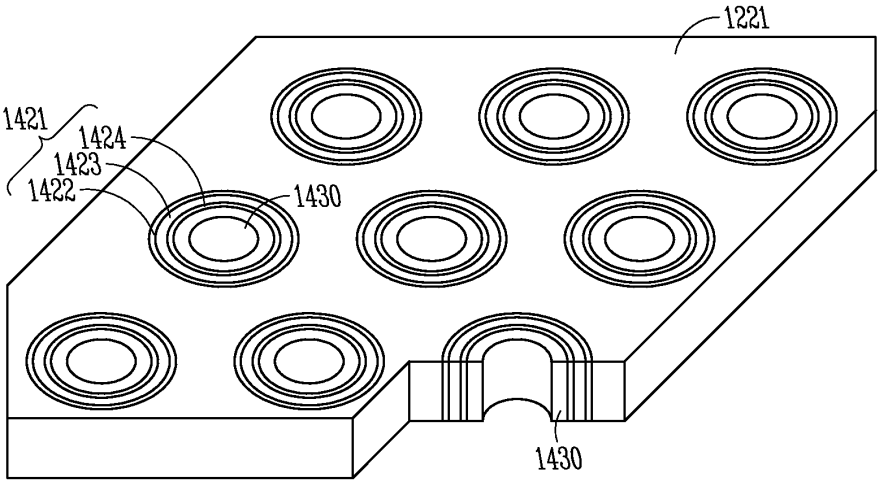

FIG. 15

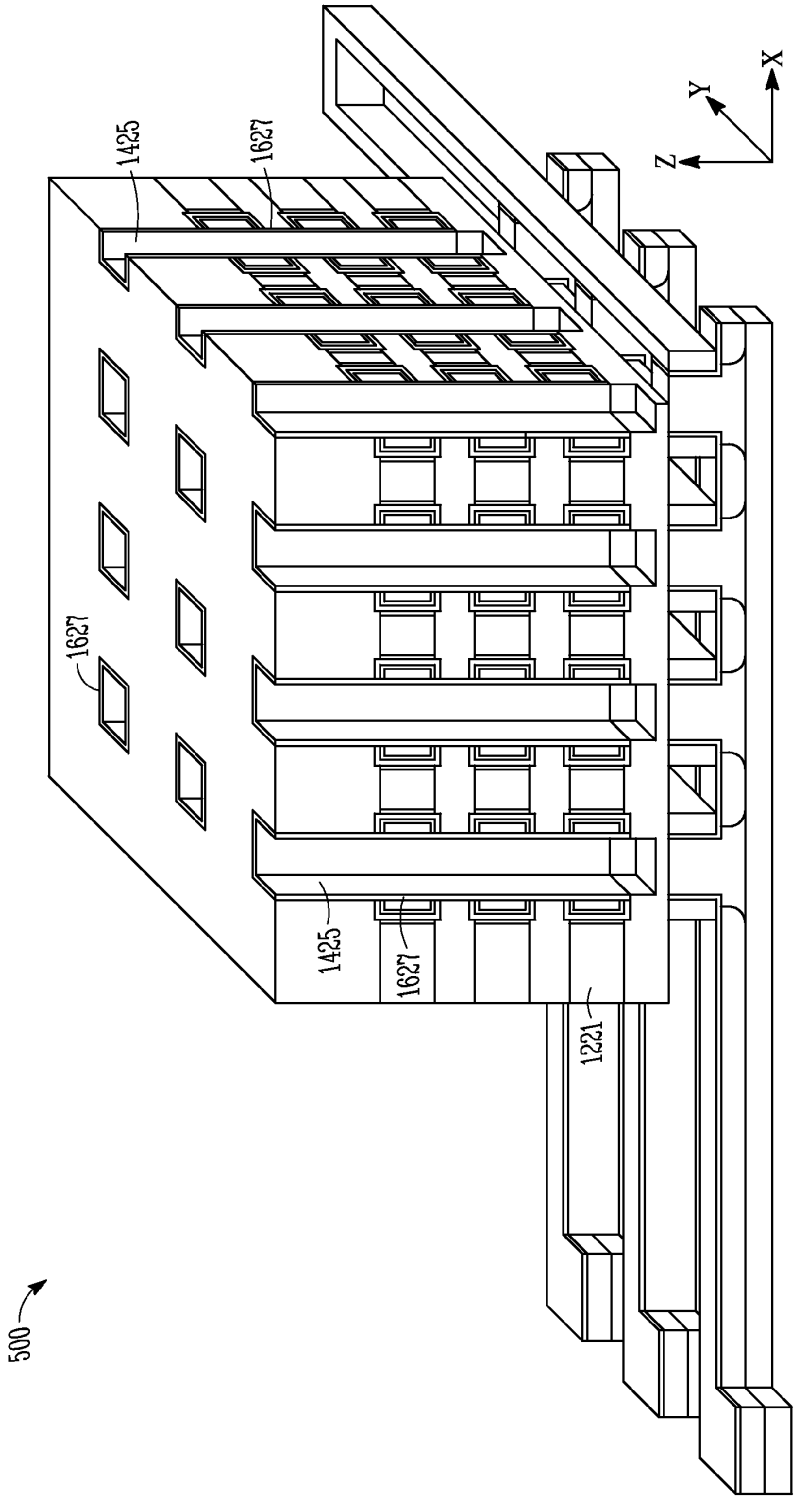

FIG. 16

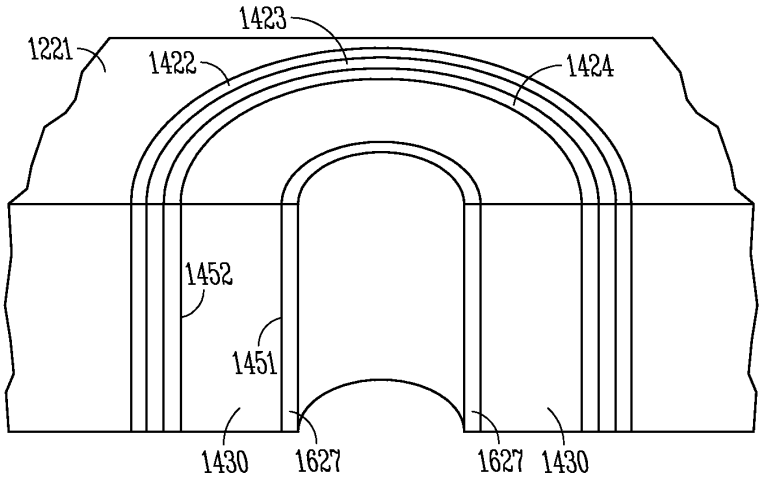

FIG. 17

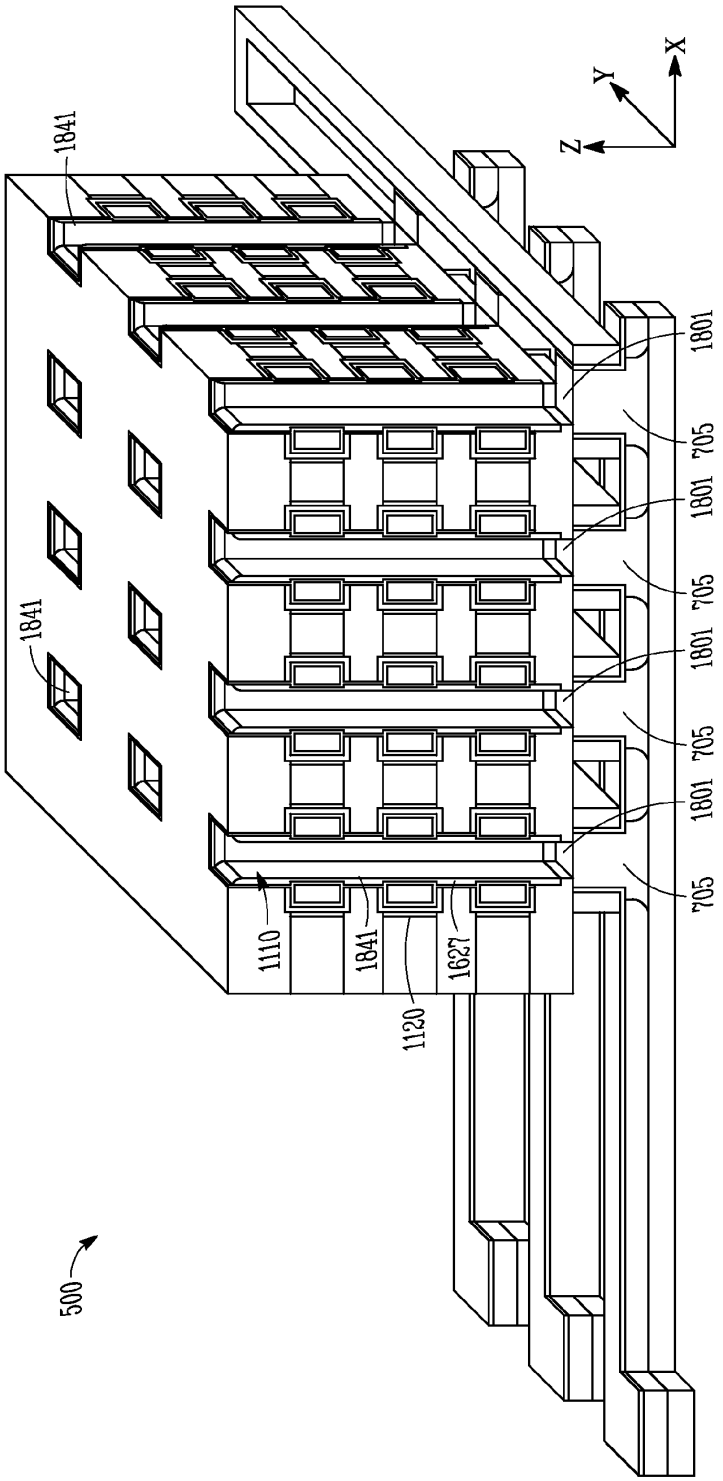
1841
1841
1801
705
1801
705
1801
705
1801
705
1110
1841
1120
1627
500
Z
Y
X

FIG. 18

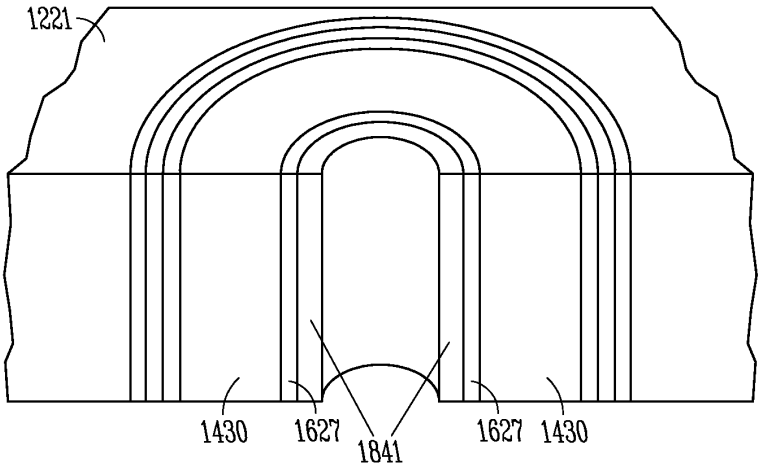

FIG. 19

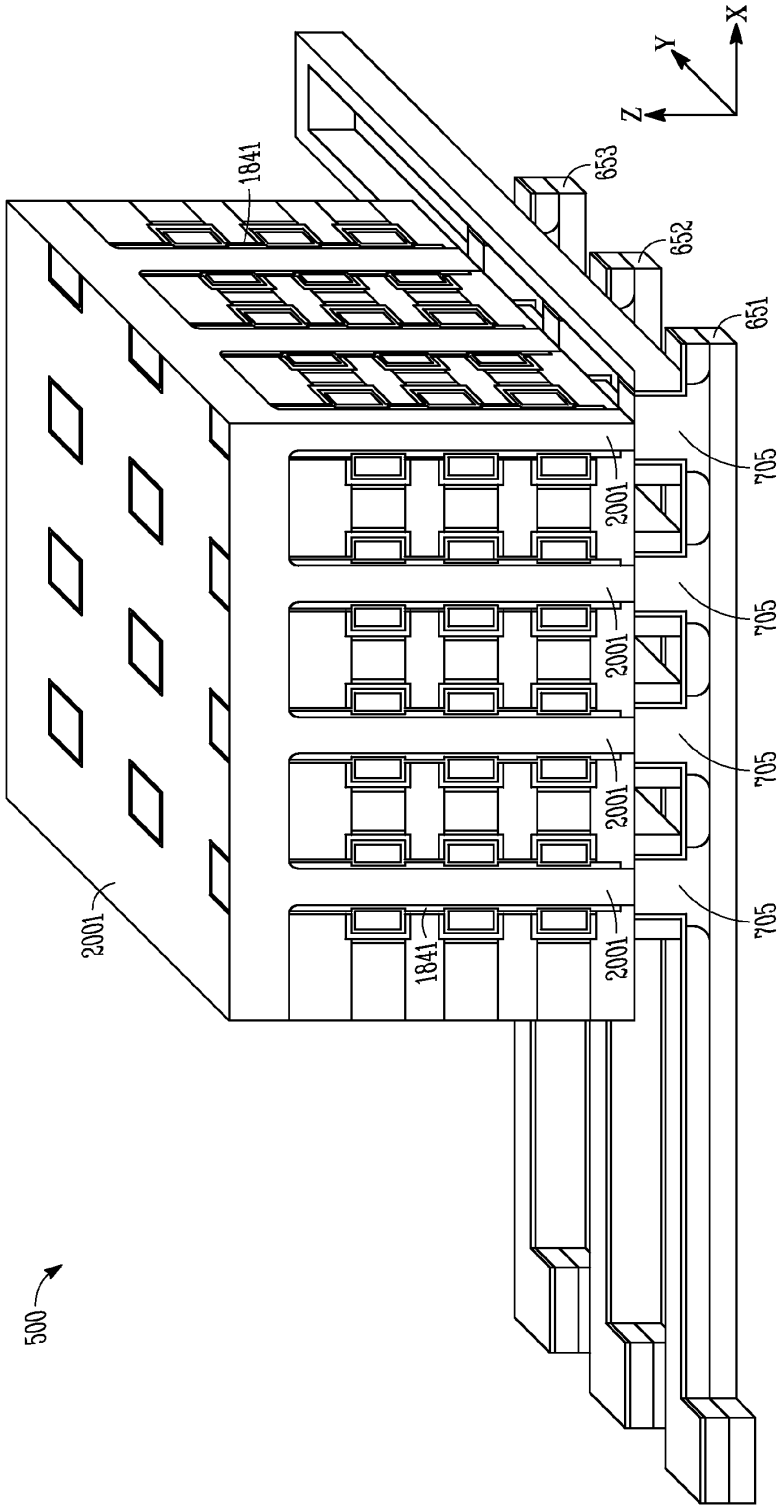
X
Y
Z
1841
653
652
651
705
705
705
705
2001
2001
2001
2001
2001
1841
500

FIG. 20

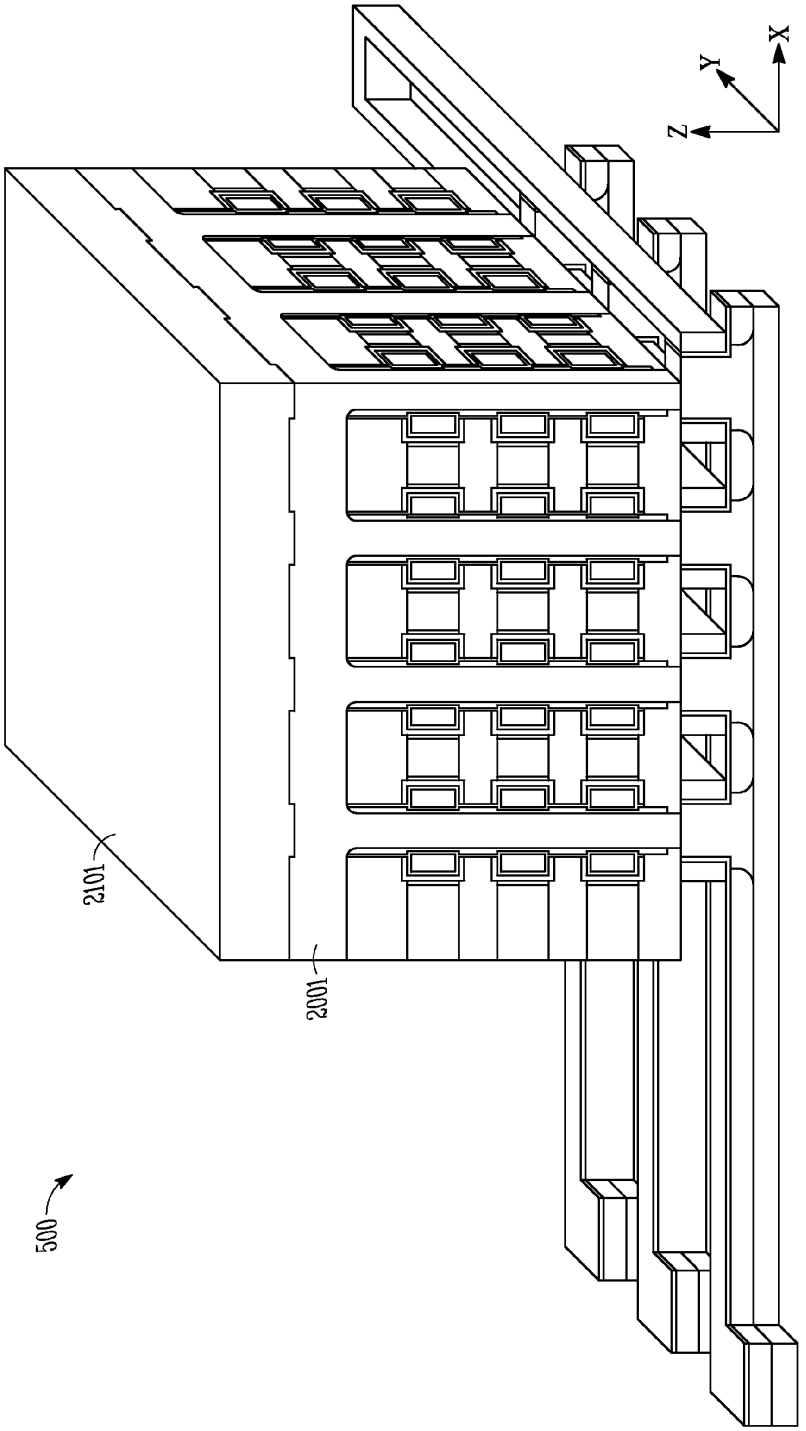

FIG. 21

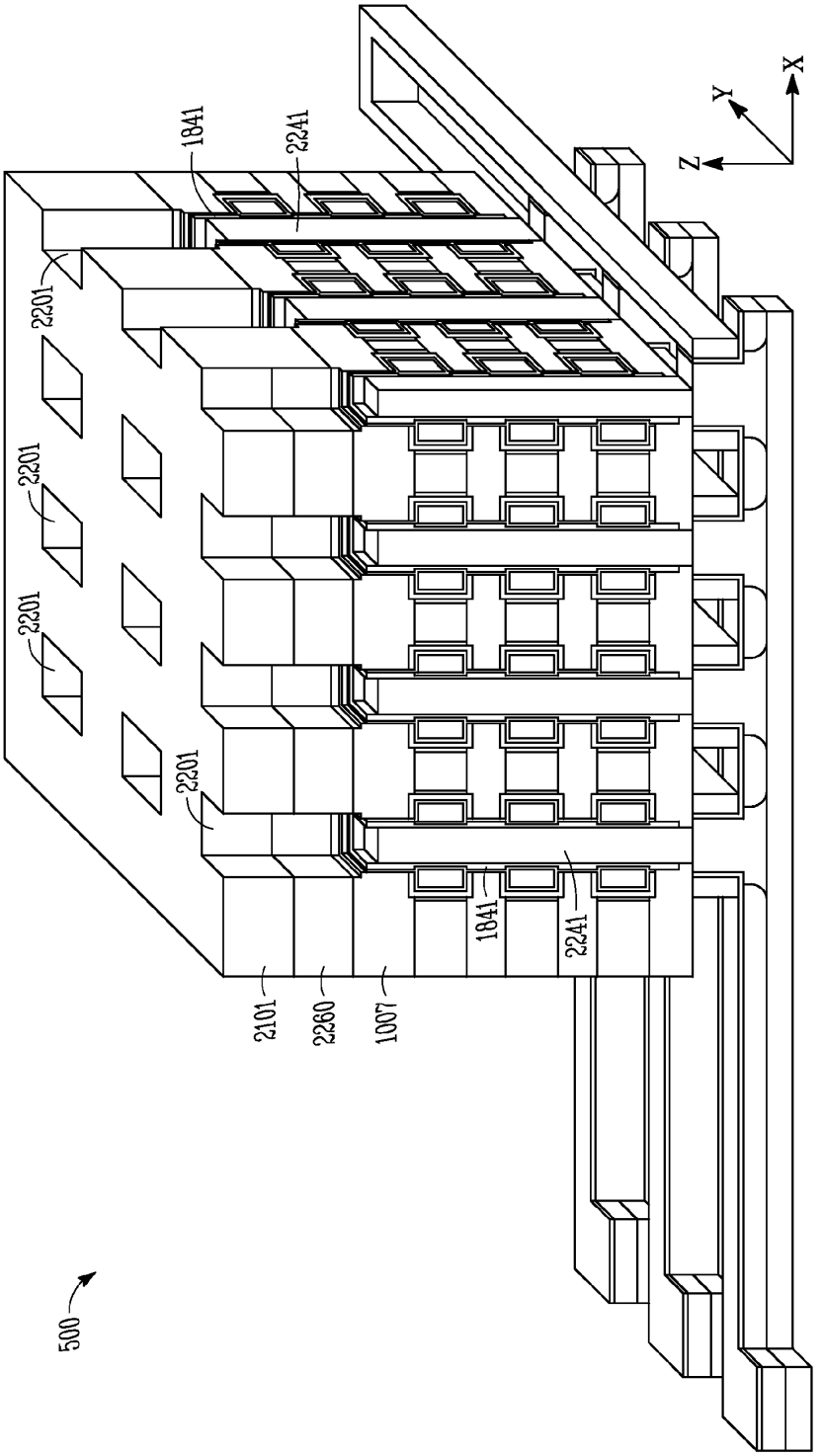
1841
2241
2201
2201
2201
2201
2101
2260
1007
1841
2241
500
Z
Y
X

FIG. 22

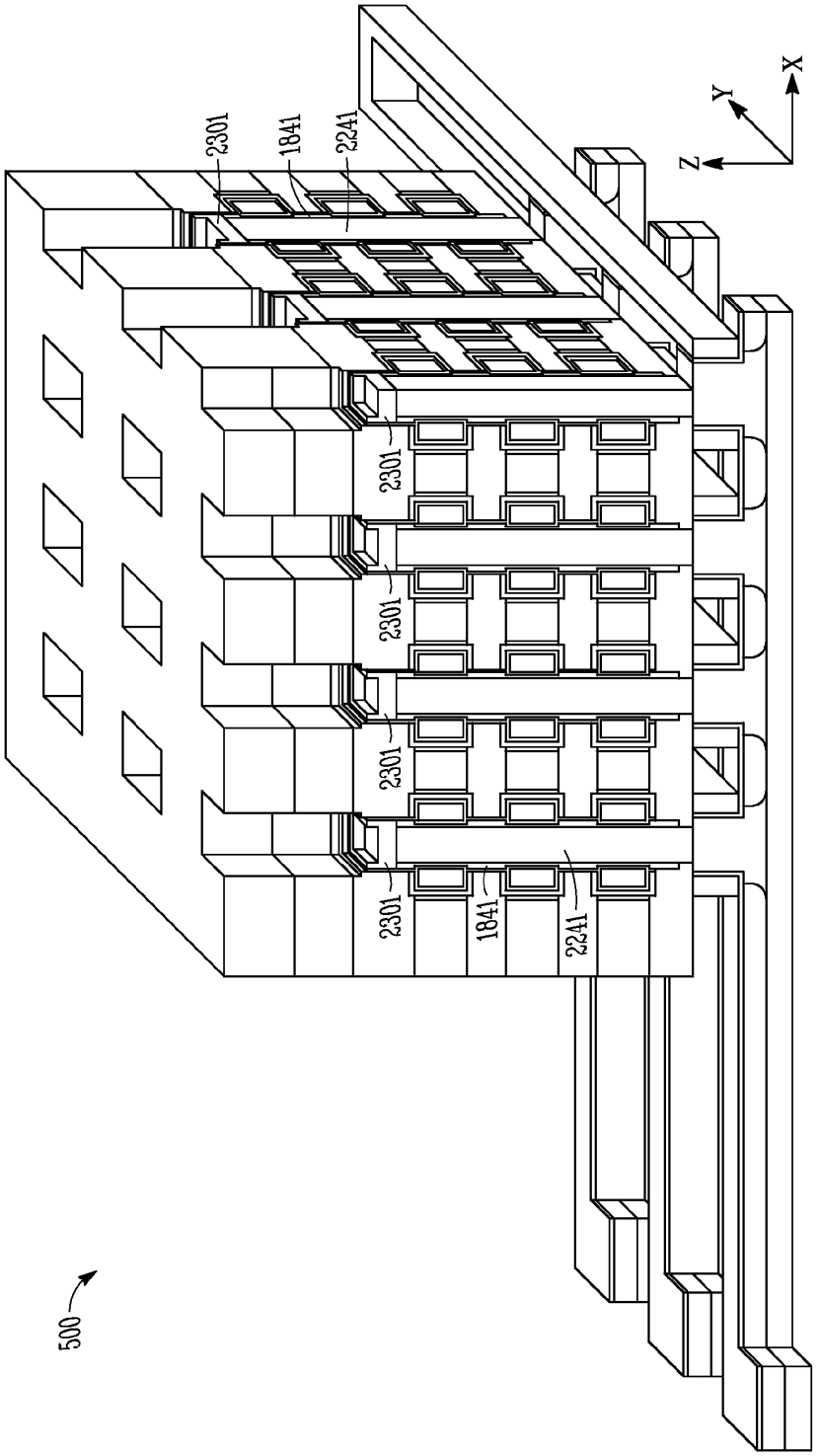

FIG. 23

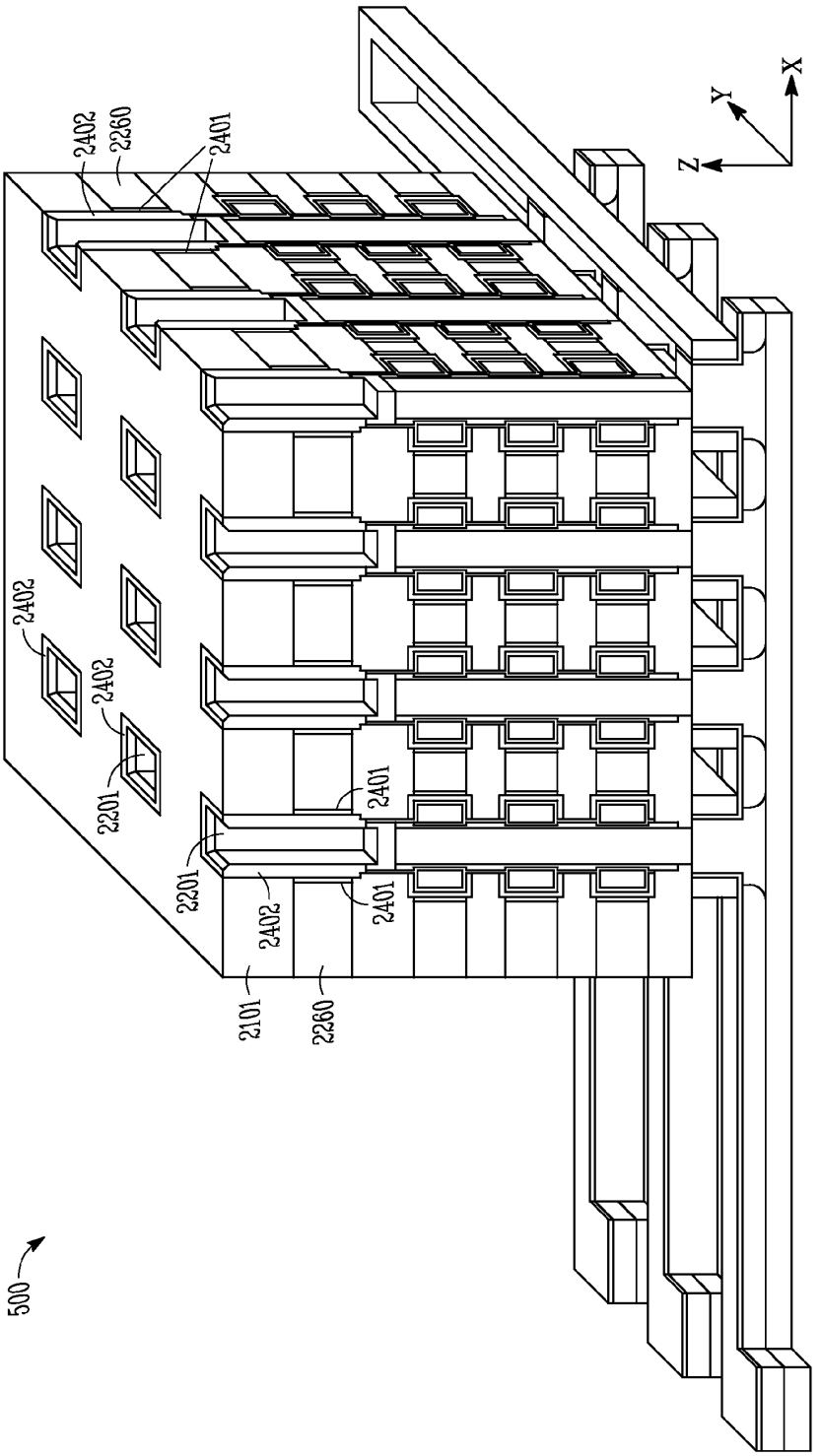
2402
2260
2401
2402
2402
2201
2201
2402
2401
2401
2101
2260
500
Z
Y
X

FIG. 24

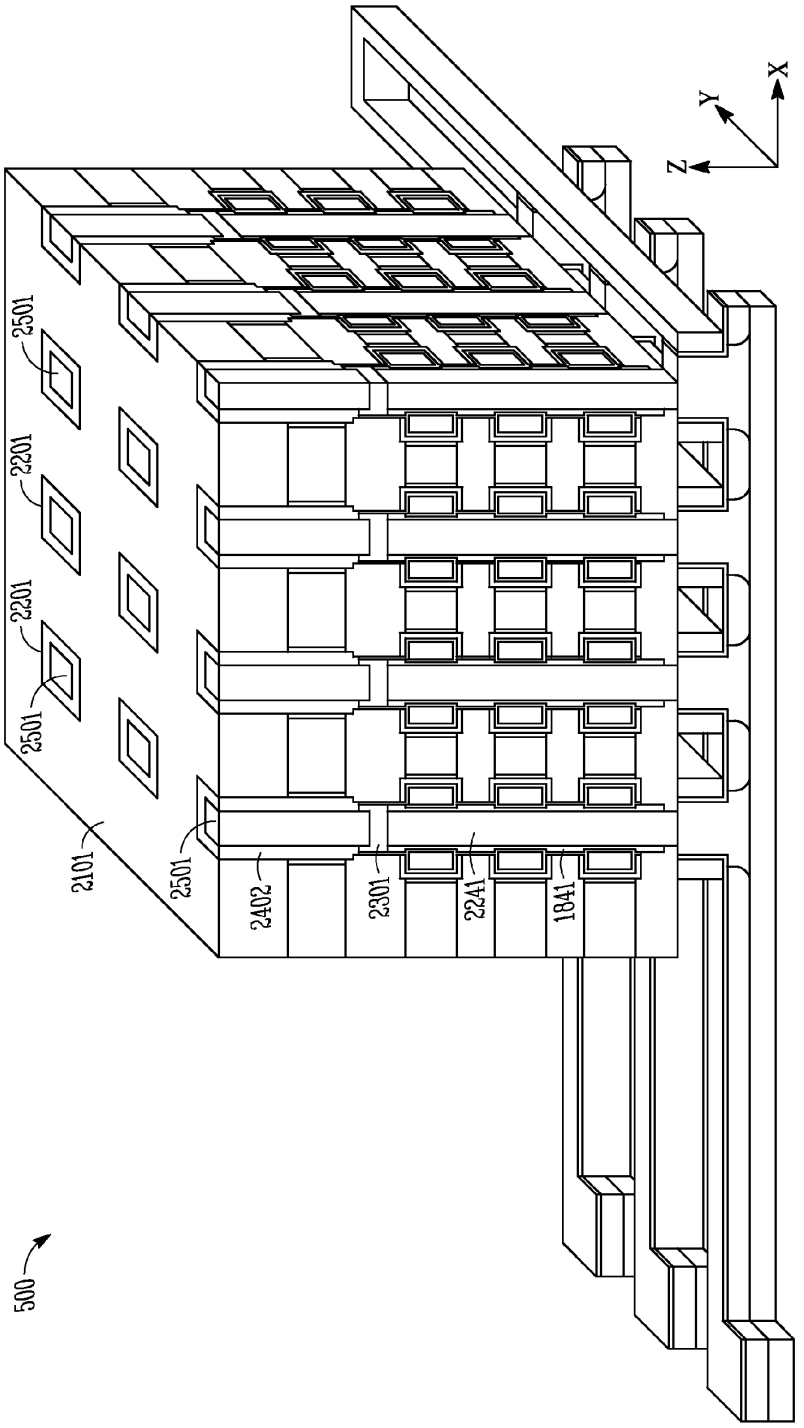

FIG. 25

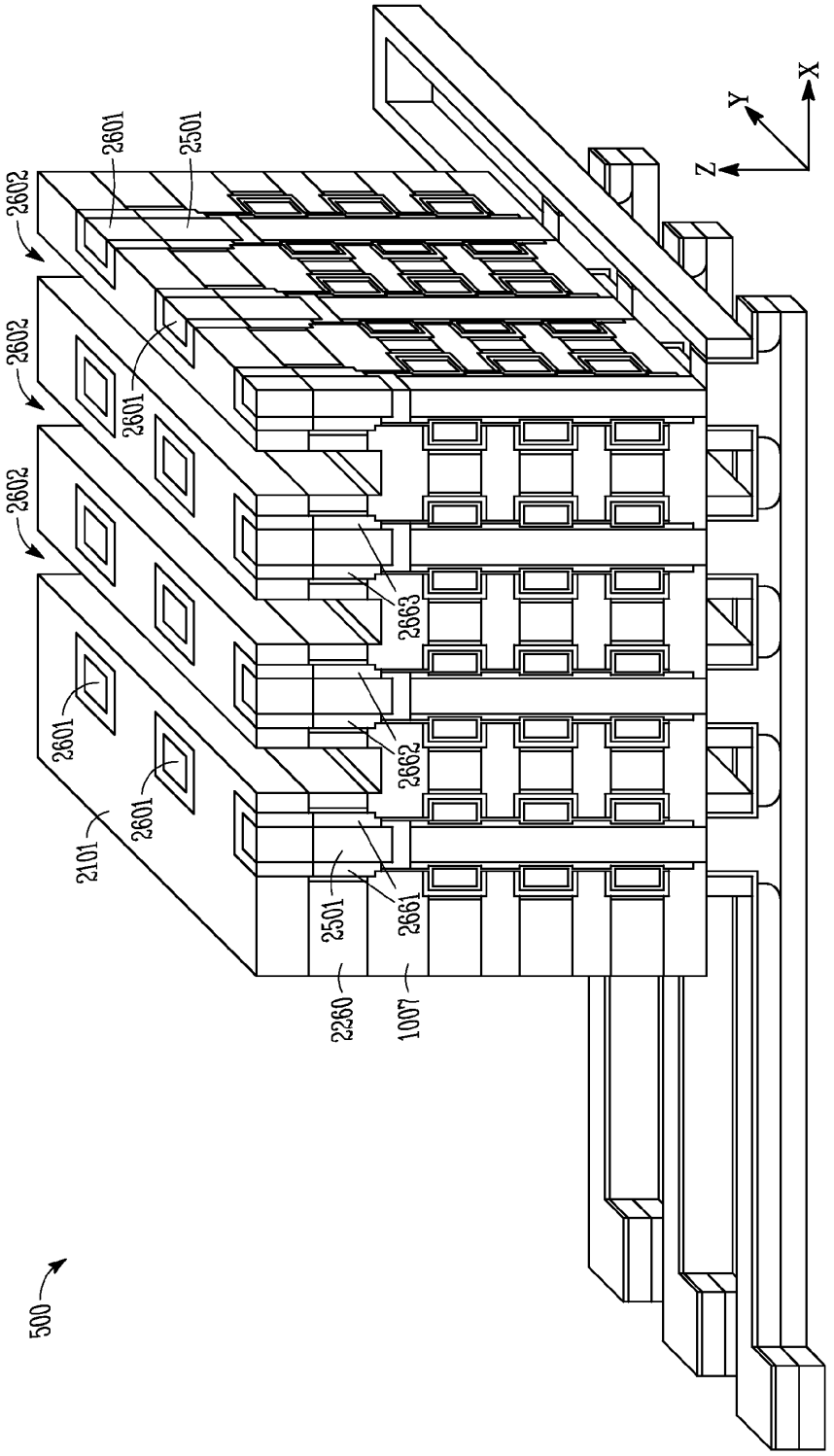
2602
2601
2501
2602
2601
2602
2663
2601
2662
2601
2101
2501
2661
2260
1007
500
X
Y
Z

FIG. 26

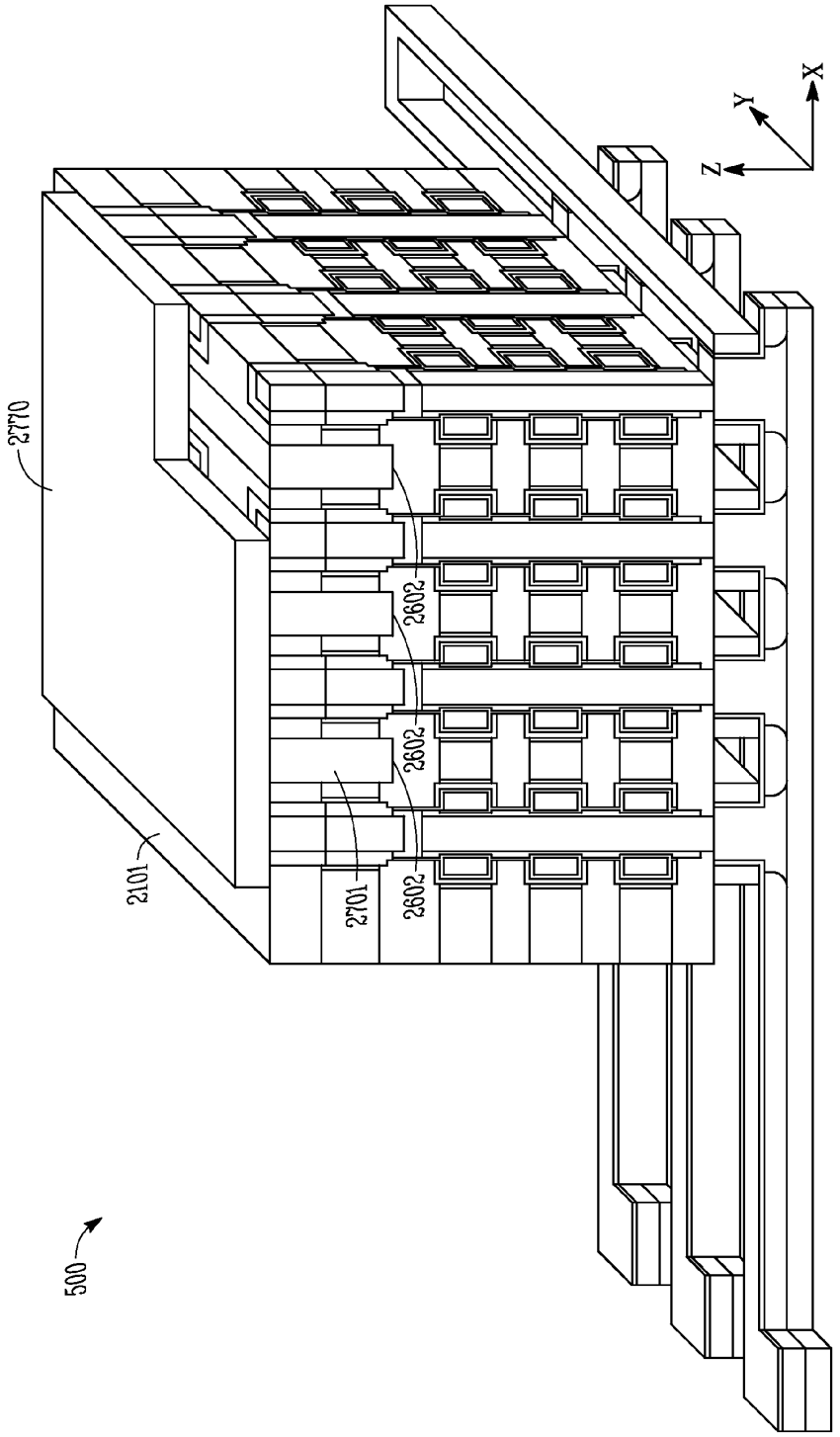

FIG. 27

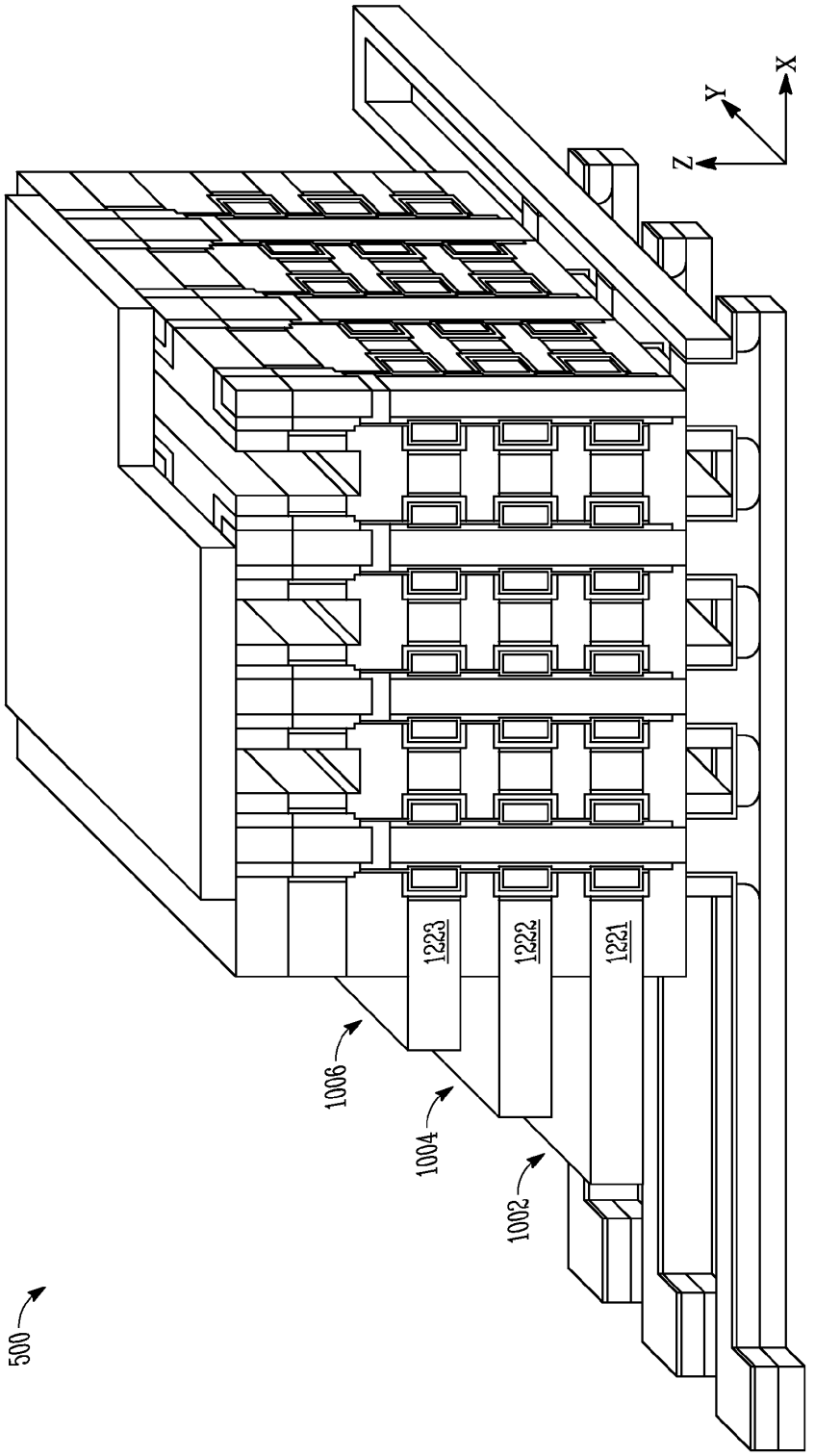

FIG. 28

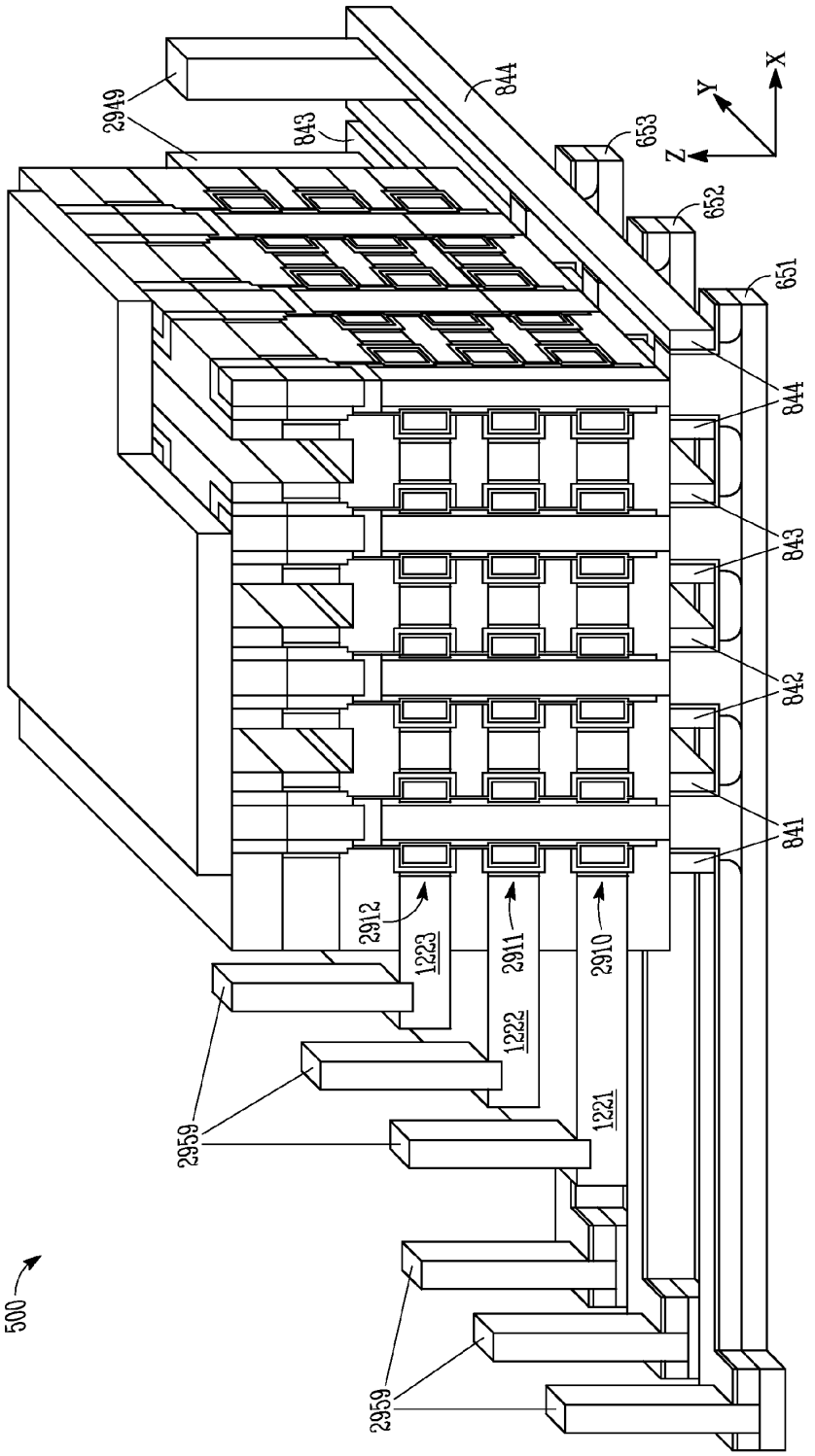
2949
843
844
653
652
651
X
Y
Z
844
843
842
841
2912
2911
2910
1223
1222
1221
2959
2959
500

FIG. 29

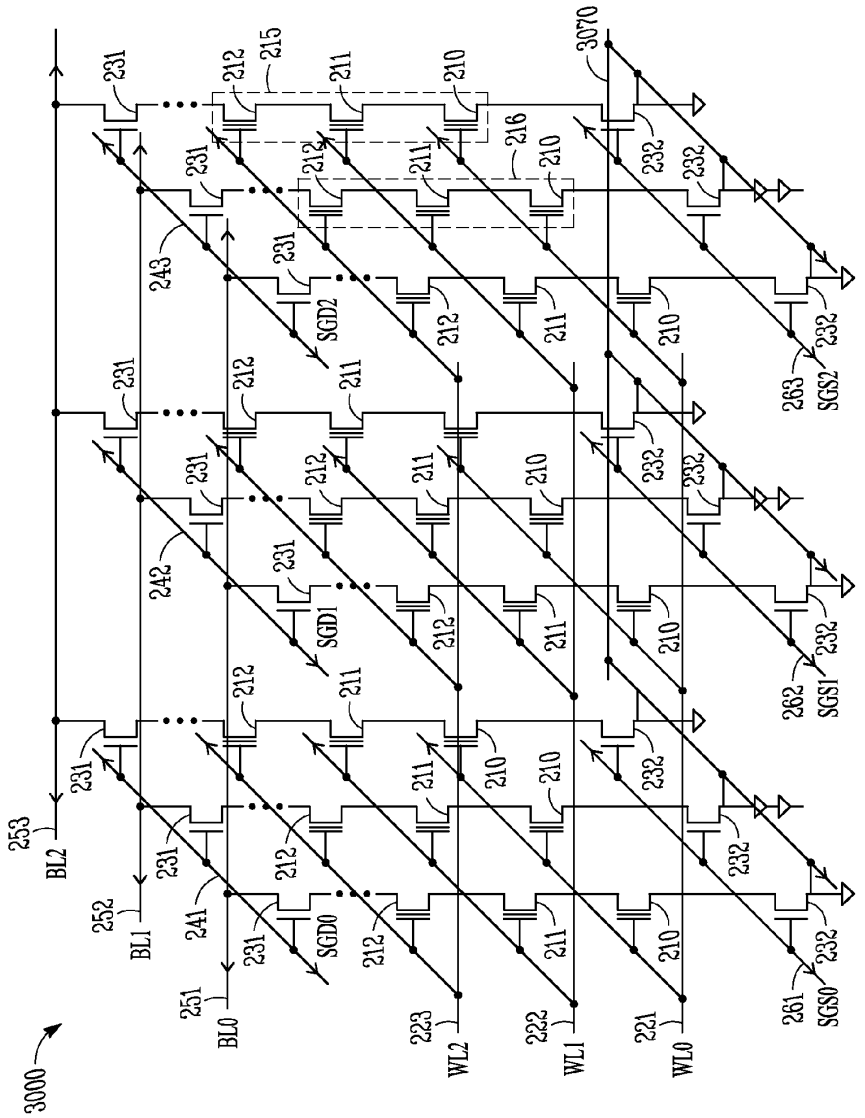
3000
253
BL2
252
BL1
251
BL0
231
241
242
243
SGD0
SGD1
SGD2
212
211
210
215
216
3070
232
223
WL2
222
WL1
221
WL0
261
SGS0
262
SGS1
263
SGS2

FIG. 30

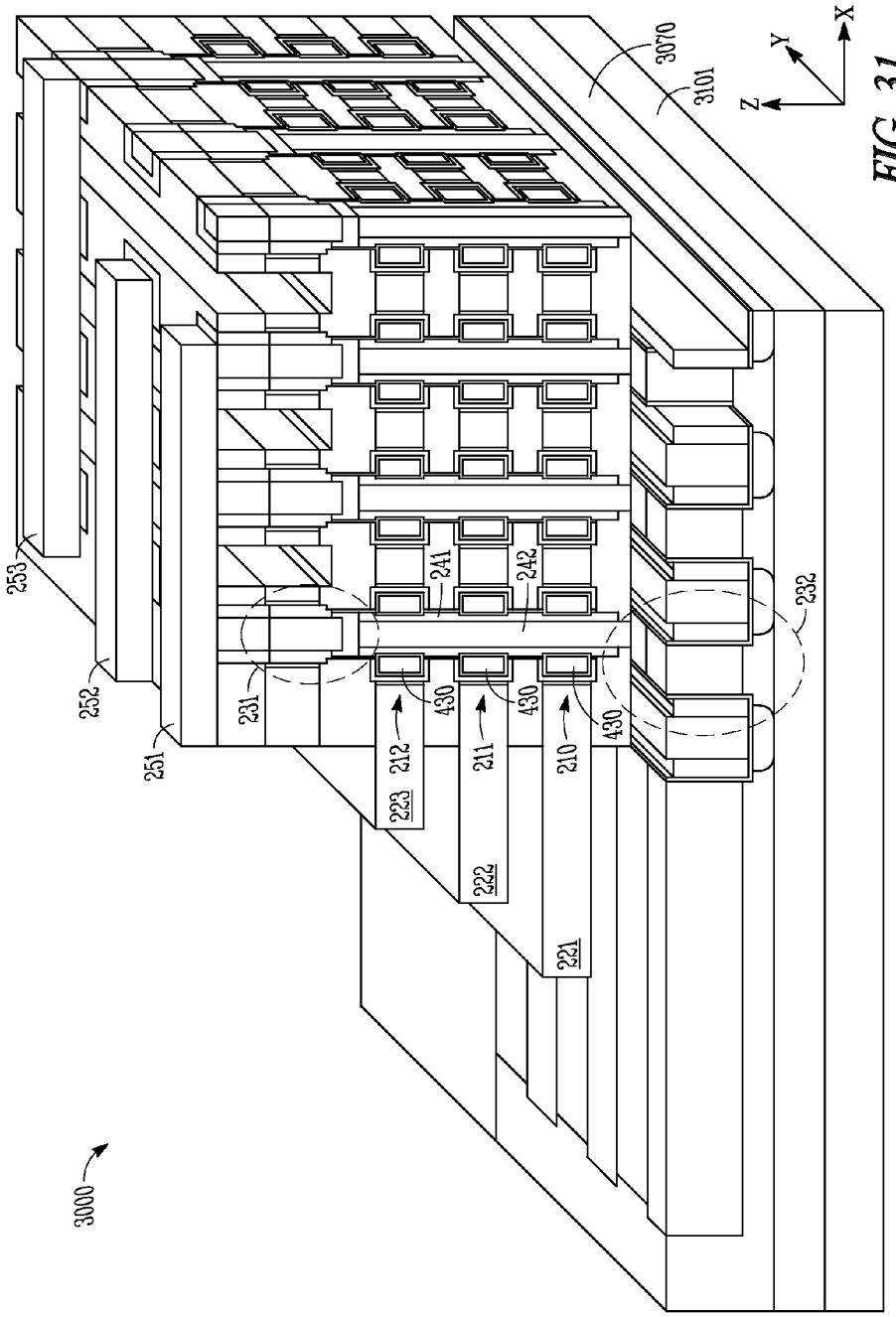
3000
253
252
251
231
212
223
430
211
222
430
210
221
430
241
242
232
3070
3101
Z
Y
X

FIG. 31

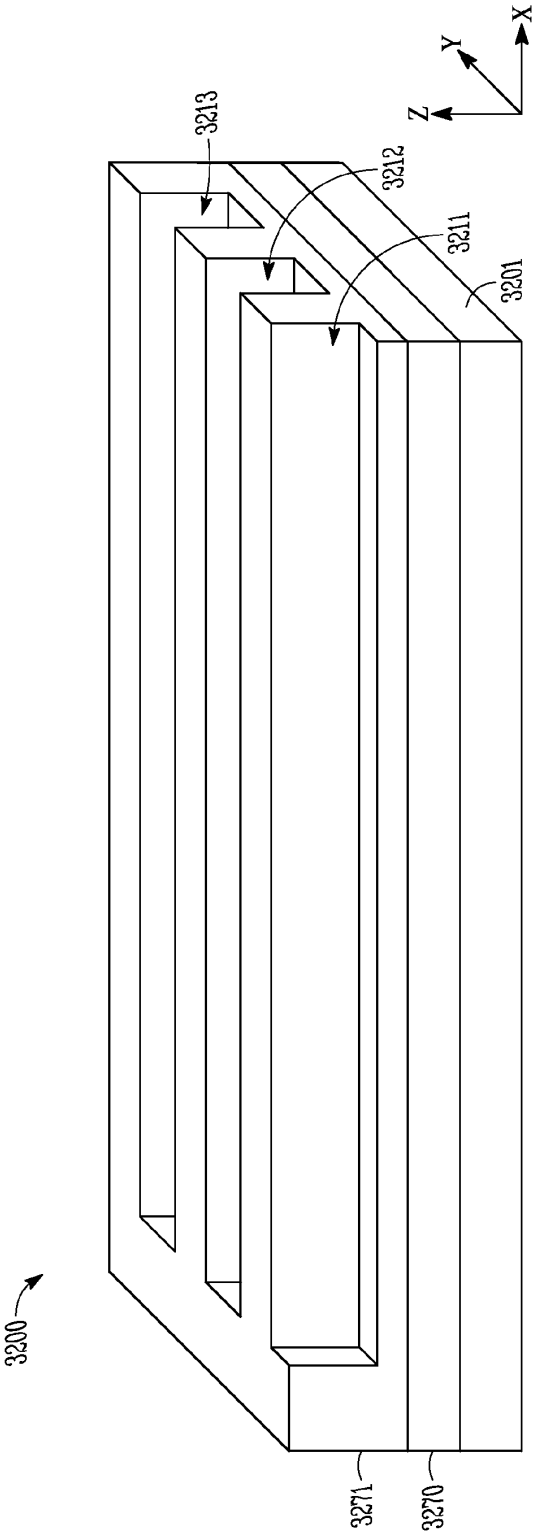

FIG. 32

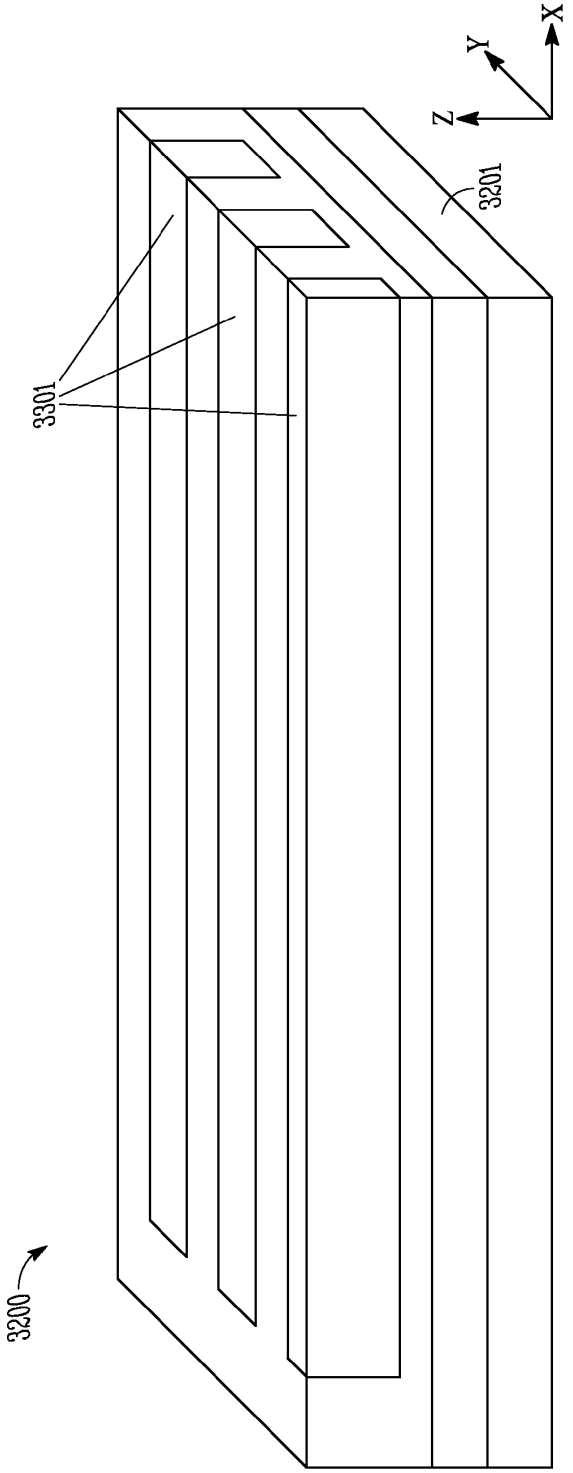

FIG. 33

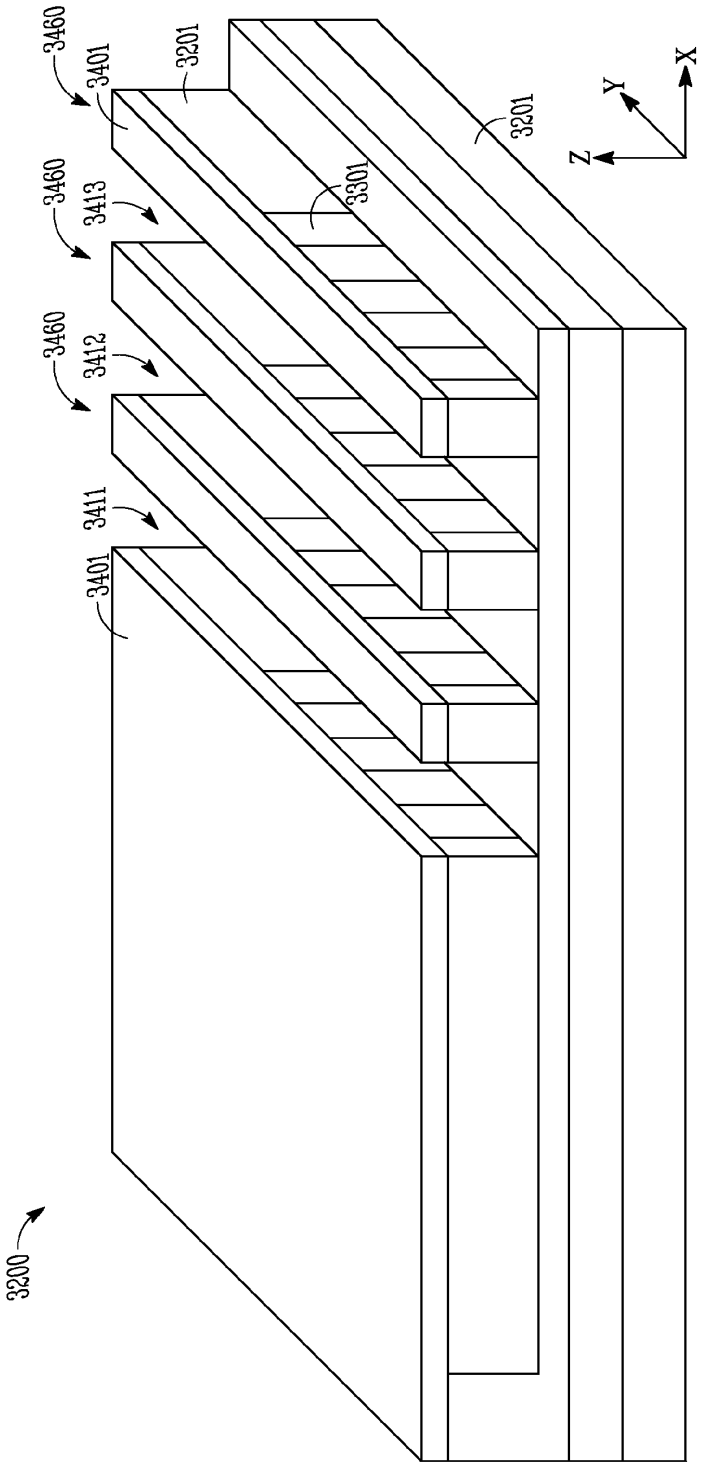
3460
3401
3201
3460
3413
3460
3412
3411
3401
3200
3301
3201
Z
Y
X

FIG. 34

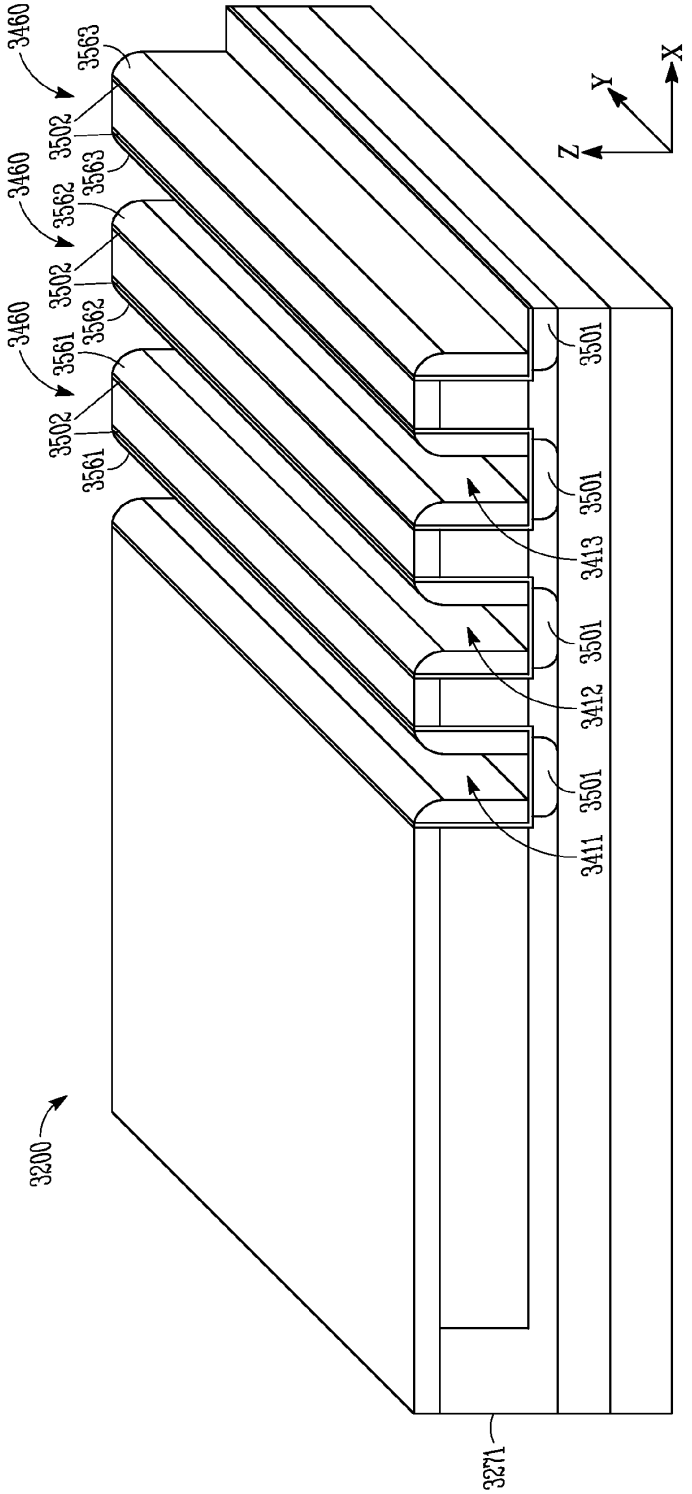
3460
3563
3502
3563
3460
3562
3502
3562
3460
3561
3502
3561
3501
3501
3413
3501
3412
3501
3411
3200
3271
Z
Y
X

FIG. 35

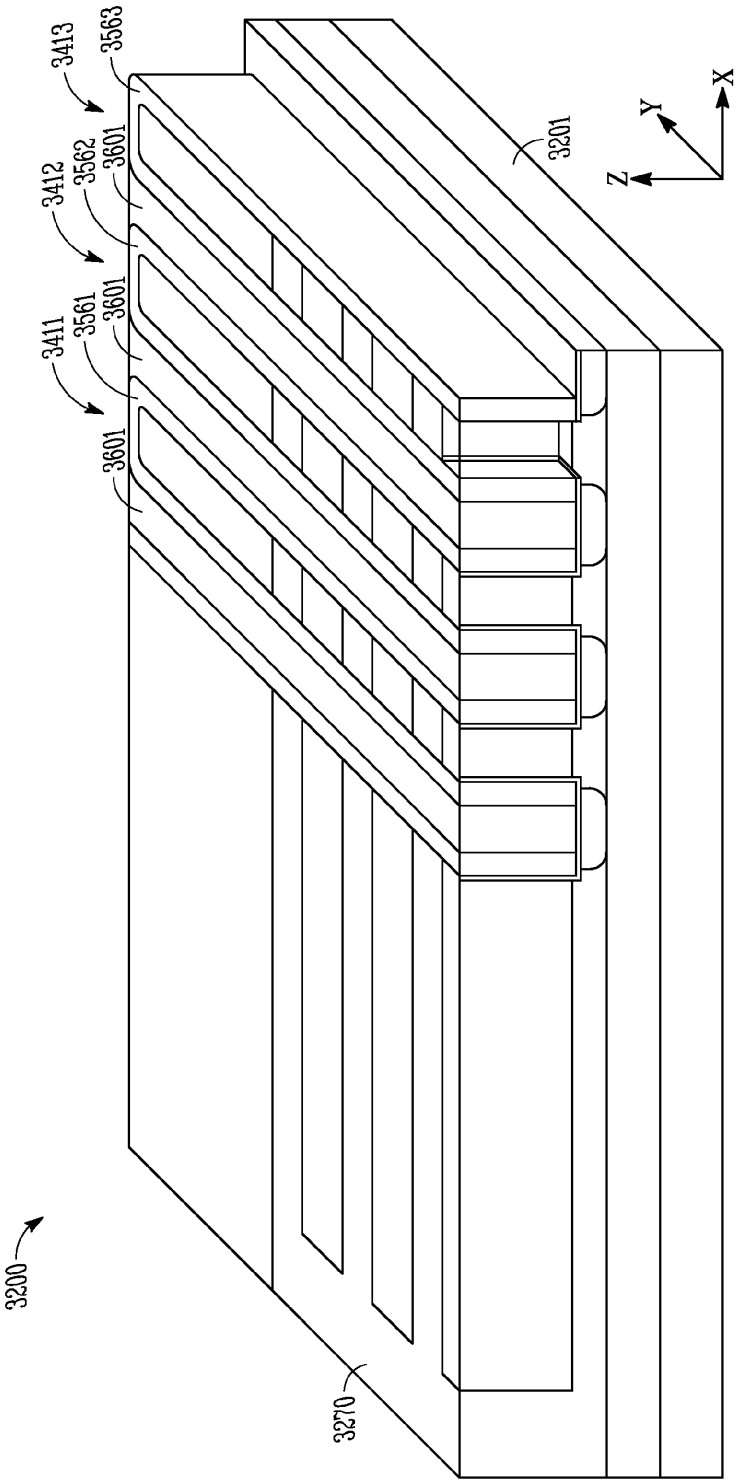
3413
3563
3412
3562
3601
3411
3561
3601
3601
3200
3270
3201
Z
Y
X

FIG. 36

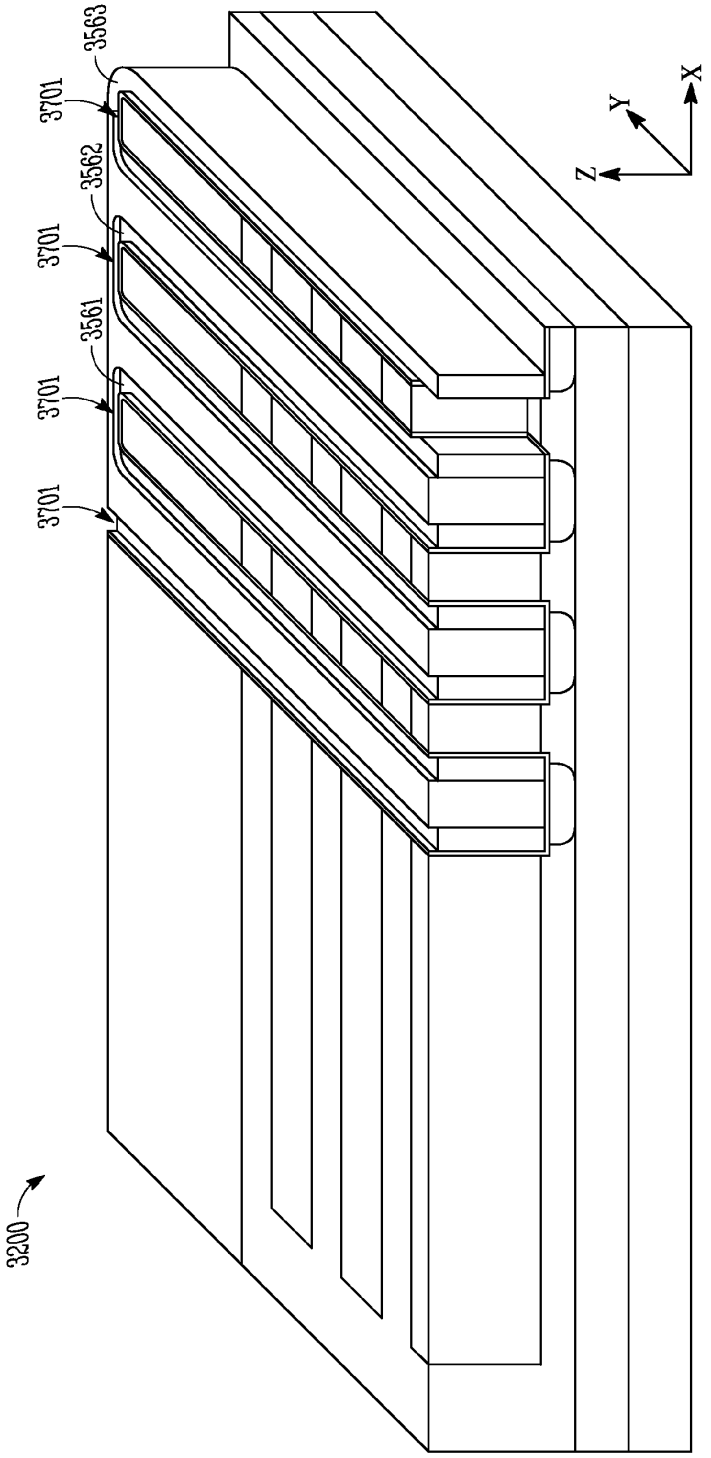

FIG. 37

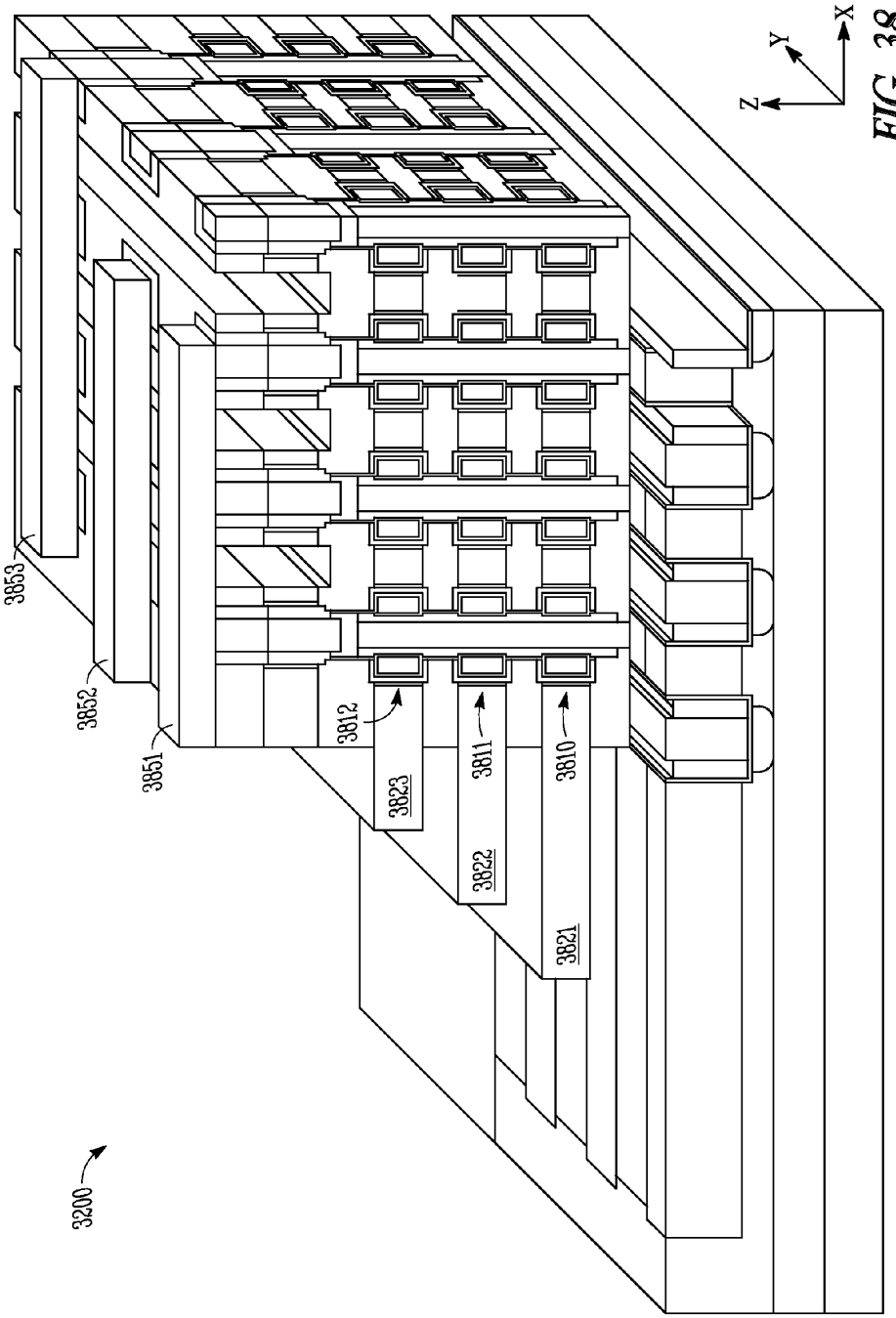

FIG. 38

THREE DIMENSIONAL MEMORY AND METHODS OF FORMING THE SAME

BACKGROUND

Non-volatile memory devices such as flash memory devices are used in many computers and electronic devices to store information. A flash memory device usually has a write operation to store information (e.g., data and instruction codes), a read operation to retrieve the stored information, and an erase operation to clear information from the memory. As demand for higher density memory device increases, three-dimensional (3D) memory devices have been proposed. An example of a conventional 3D memory device is described by Jiyoung Kim et al. in an article titled "Novel 3-D Structure for Ultra High Density Flash Memory with Vertical-Array-Transistor (VRAT) and Planarized Integration on the same Plane (PIPE)", published in the 2008 Symposium on VLSI. Technology Digest of Technical Papers, pages 22-23. Since 3D memory devices are relatively new, manufacturing these devices can pose fabrication process challenges.

BRIEF DESCRIPTION OF THE DRAWINGS

FIG. **1** shows a block diagram of a memory device having a memory array with memory cells, according to an embodiment of the invention.

FIG. **2** shows a schematic diagram of a portion of a memory device having data lines located below memory cells, according to an embodiment of the invention.

FIG. **3** shows a three-dimensional view of a portion of the memory device of FIG. **2**, according to an embodiment of the invention.

FIG. **4** shows a portion of a control gate and a memory cell of the memory device of FIG. **3**, according to an embodiment of the invention.

FIG. **5** through FIG. **29** show various processes of forming a memory device having data lines located below memory cells, according to an embodiment of the invention.

FIG. **30** shows a schematic diagram of a portion of a memory device having data lines located above memory cells, according to an embodiment of the invention.

FIG. **31** shows a three-dimensional view of a portion of the memory device of FIG. **30**, according to an embodiment of the invention.

FIG. **32** through FIG. **38** show various processes of forming a memory device with data lines located above memory cells, according to an embodiment of the invention.

DETAILED DESCRIPTION

FIG. **1** shows a block diagram of a memory device **100** having a memory array **102** with memory cells **110** according to an embodiment of the invention. Memory cells **110** can be arranged in rows and columns along with access lines **123** (e.g., wordlines having signals WL**0** through WLM) and lines **124** (e.g., bit lines having signals BL**0** through BLN). Memory device **100** uses lines **124** and **128** to transfer information within memory cells **110**. Memory cells **110** can be physically located in multiple device levels such that one group of memory cells **110** can be stacked on one or more groups of other memory cells **110**. Row decoder **132** and column decoder **134** decode address signals A**0** through AX on lines **125** (e.g., address lines) to determine which memory cells **110** are to be accessed. Row and column level decoders **136** and **138** of row and column decoders **132** and **134**, respectively, determine which of the multiple device levels of memory device **100** that the memory cells **110** to be accessed are located.

A sense amplifier circuit **140** operates to determine the value of information read from memory cells **110** and provide the information in the form of signals to lines **124** and **128**. Sense amplifier circuit **140** can also use the signals on lines **124** and **128** to determine the value of information to be written to memory cells **110**. Memory device **100** can include circuitry **150** to transfer information between memory array **102** and lines (e.g., data lines) **126**. Signals DQ**0** through DQN on lines **126** can represent information read from or written into memory cells **110**. Lines **126** can include nodes within memory device **100** or nodes (e.g., pins or solder balls) on a package where memory device **100** resides. Other devices external to memory device **100** (e.g., a memory controller or a processor) may communicate with memory device **100** through lines **125**, **126**, and **127**.

Memory device **100** performs memory operations such as a read operation to read information from memory cells **110** and a write operation (sometime referred to as a programming operation) to store information into memory cells **110**. A memory control unit **118** controls the memory operations based on control signals on lines **127**. Examples of the control signals on lines **127** include one or more clock signals and other signals to indicate which operation, (e.g., a write or read operation) that memory device **100** performs. Other devices external to memory device **100** (e.g., a processor or a memory controller) may control the values of the control signals on lines **127**. Specific values of a combination of the signals on these lines can produce a command (e.g., a write or read command) that causes memory device **100** to perform a corresponding memory operation (e.g., a write or read operation).

Each of memory cells **110** can store information representing a value of a single bit or a value of multiple bits such as two, three, four, or other numbers of bits. For example, each of memory cells **110** can store information representing a binary value "0" or "1" of a single bit. In another example, each of memory cells **110** can store information representing a value of multiple bits, such as one of four possible values "00", "01", "10", and "11" of two bits, one of eight possible values "000", "001", "010", "011", "100", "101", "110" and "111, or one of other values of other number of multiple bits.

Memory device **100** can receive a supply voltage, including supply voltage signals Vcc and Vss, on lines **141** and **142**, respectively. Supply voltage signal Vss may operate at a ground potential (e.g., having a value of approximately zero volts). Supply voltage signal Vcc may include an external voltage supplied to memory device **100** from an external power source such as a battery or an alternating-current to direct-current (AC-DC) converter circuitry.

Circuitry **150** of memory device **100** can include a select circuit **152** and an input/output (I/O) circuit **116**. Select circuit **152** responds to signals SEL**0** through SELn to select the signals on lines **124** and **128** that can represent the information read from or written into memory cells **110**. Column decoder **134** selectively activates the SEL**0** through SELn signals based on address signals A**0** through AX. Select circuit **152** selects the signals on lines **124** and **128** to provide communication between memory array **102** and I/O circuit **116** during read and write operations.

Memory device **100** can be a non-volatile memory device and memory cells **110** can be non-volatile memory cells such that memory cells **110** can retain information stored thereon when power (e.g., Vcc or Vss, or both) is disconnected from memory device **100**. For example, memory device **100** can be

a flash memory device such as a NAND flash or a NOR flash memory device, or other kinds of memory devices, such as a variable resistance memory device (e.g., phase change random-access-memory (PCRAM), resistive RAM (RRAM), etc.).

One skilled in the art may recognize that memory device **100** may include other features that are not shown in FIG. **1**, to help focus on the embodiments described herein.

Memory device **100** may include at least one of the memory devices and memory cells described below with reference to FIG. **2** through FIG. **38**.

FIG. **2** shows a schematic diagram of a portion of a memory device **200** having data lines **251**, **252**, and **253** located below memory cells **210**, **211**, and **212**, according to an embodiment of the invention. Memory cells **210**, **211**, and **212** can be grouped into groups, such as a group of memory cells **210**, a group of memory cells **211**, and a group of memory cells **212**. As shown in FIG. **2**, the memory cells in each group share the same control gate, such as control gate **221**, **222**, or **223** (with associated signals WL**0**, WL**1**, and WL**2**). The memory cells are coupled in series as strings, such as strings **215** and **216**. Each string can include one of the memory cells from different groups and is coupled between one of transistors **231** and one of transistors **232**.

As shown in FIG. **2**, transistors **231** have gates coupled to select lines **241**, **242**, and **243** (with associated signals SGD**0**, SGD**1**, and SGD**2**). Transistors **231** have nodes (e.g., sources) coupled to data lines **251**, **252**, and **253** (with associated signals BL**0**, BL**1**, and BL**2**). Data lines **251**, **252**, and **253** sometimes correspond to bit lines or sense lines of a non-volatile memory device.

Transistors **232** have gates coupled to select lines **261**, **262**, and **263** (with associated signals SGS**0**, SGS**1**, and SGS**2**). Transistors **232** have nodes (e.g., drains) coupled to a common source **270** of memory cell strings in a non-volatile memory device.

FIG. **2** shows three groups of memory cells with associated components coupled to them, as an example. The number of groups of memory cells and their associated components (e.g., control gates and data lines) can vary.

Memory device **200** uses control gates **221**, **221**, and **223** to control access to memory cells **210**, **211**, and **212** during a read operation to sense (e.g., read) information stored in memory cells **210**, **211**, and **212**, and during a write operation to store information into memory cells **210**, **211**, and **212**. Memory device **200** uses data lines **251**, **252**, and **253** to transfer the information read from these memory cells during a read operation.

Transistors **231** and **232** are responsive to signals SGD**0**, SGD**1**, and SGD**2**, and signals SGS**0**, GS**1**, and SGS**2**, respectively, to selectively couple the memory cells to data lines **251**, **252**, and **253** and common source **270** during a read or write operation.

To help focus on the description herein; the description herein omits detailed description of operations of memory device, such as write, read, and erase operation. One skill in the art would recognize these operations. For example, in an erase operation of memory device **200**, a voltage of approximately 20 volts can be applied to data lines **251**, **252**, and **253** while control gates **221**, **221**, and **223**, select lines **241**, **242**, and **243**, and select lines **261**, **262**, and **263** can be "floated" (e.g., leave unconnected to a voltage). In this erase operation, electrons from memory elements of memory cells **210**, **211**, and **212** may move to data lines **251**, **253**, and **253**.

FIG. **3** shows a 3D view of a portion of memory device **200**, according to an embodiment of the invention. FIG. **3** also shows X, Y, and Z directions, and device levels **301**, **302**, and **303** arranged in the Z-direction. Memory cells **210** of the same group can be arranged in rows and columns in the X-direction and Y-direction. Each group of memory cells is located in different device levels **301**, **302**, or **303**. For example, the group having memory cells **210** is located in device level **301**. The group having memory cells **211** is located in device level **302**. The group having memory cells **212** is located in device level **303**.

As shown in FIG. **3**, memory cells **210**, **211**, and **212** in each string (e.g., memory cells between transistors **231** and **232**) are substantially vertically aligned in the Z-direction with respect to a substrate underneath data lines **251**, **252**, and **253**. The substrate is not shown in FIG. **3**, but can be similar to substrate **503** of FIG. **5** and FIG. **6**. FIG. **3** also shows a channel **241** and a conductive material portion **242** extending vertically in the Z-direction and through memory element **430** of memory cells **210**, **211**, and **212** in the same string between transistors **231** and **232**, which corresponds to transistors **231** and **232** of FIG. **2**. As shown in FIG. **3**, transistor **231** can include a double-gate coupled to a body **391** (e.g., transistor channel) to control (turn on or off) the transistor. The structure of the double-gate can include two segments of the same select line **241** (as shown in FIG. **3**), such that the two segments are located on only two respective sides of body **391**.

Memory device **200** in FIG. **3** also can include contacts **329**, **349**, and **359**. Contacts **329** provide electrical connections to control gates **221**, **222**, and **223**. Contacts **349** provide electrical connections to select lines **241**, **242**, **243**, and **244**. Contacts **359** provide electrical connections to and from data lines **251**, **252**, and **253**. Select line **244** and the memory cell associated with it in the Z-direction are not shown in FIG. **2**.

FIG. **4** shows a portion of control gate **221** and a memory cell **210** of memory device **200** of FIG. **3**. Control gates **222** and **223** and memory cells **211** and **212** of FIG. **2** have structures similar to control gate **221** and memory cell **210**, respectively. As shown in FIG. **4**, control gate **221** can include a homogenous material with cavities **420**, each cavity being filed with various components, including materials different from the homogenous material. The various components include: a memory element **430**; a channel **441**, a conductive material portion **442**, and dielectrics **421** and **427**. Dielectric **421** can include multiple materials **422**, **423**, and **424** arranged as different layers. As shown in FIG. **4**, memory element **430** of each memory cell **210** has a ring shape (e.g., donut shape) with an inner side **451** and an outer side **452**. Each of the other memory cells **211** and **212** shown in FIG. **3** also has a ring shape. As shown in FIG. **3**, within memory cells **210**, **211**, and **212** in the same string (e.g., between transistors **231** and **232**), the entire ring-shape memory element **430** of each memory cell is substantially vertically aligned (in the Z-direction) with the entire ring-shape memory element of each of the other memory cells in the same string.

Each memory element **430** can store information, such as based on the amount of charge (e.g., number of electrons) therein. In each such memory element **430**, the amount of charge corresponds to the value of information store that memory element. The amount of charge can be controlled in a write operation or in erase operation. For example, electrons from channel **441** or conductive material portion **442**, or both, can move to memory element **430** during a write operation due to a tunneling effect known to those skilled in the art. In an erase operation, electrons from memory element **430** can move back to channel **441** or conductive material portion **442**, or both, to data lines **251**, **253**, and **253** (FIG. **2** and FIG. **3**).

Alternative embodiments might use a memory element **430** that can store information, such as based on the resistance of the element **430**, for example.

Memory device **200** of FIG. **3** can be formed using processes similar to or identical to those described below with reference to FIG. **5** through FIG. **29**.

FIG. **5** through FIG. **29** show various processes of forming a memory device **500** having data lines located below memory cells, according to an embodiment of the invention. Memory device **500** (shown in more details in FIG. **29**) can correspond to memory device **300** of FIG. **3**.

FIG. **5** shows memory device **500** having a substrate **503**, which can include materials **501** and **502** arranged as layers. Material **501** can include bulk silicon or could be another semiconductor material. Material **502** can be a dielectric material, for example, silicon oxide. FIG. **5** also shows materials **504** and **505** formed over substrate **503**. Forming materials **504** and **505** can include depositing a conductive material over substrate **503** and then depositing another conductive material over material **504**. Material **504** can include a metal or other conductive materials. Material **505** can include undoped polysilicon or doped polysilicon, such as p-type silicon or another conductive materials.

FIG. **5** also shows an X-direction, a Y-direction perpendicular to the X-direction, and a Z-direction perpendicular to both the X-direction and the Y-direction. As shown in FIG. **5**, materials **504** and **505** can be formed as different layers, one layer over (e.g., on) one or more other layers in the Z-direction.

As used herein, the term "on" used with respect to two or more materials, one "on" the other, means at least some contact between the materials, while "over" or "overlaying" could refer to either a material being "on" another material or where there is one or more additional intervening materials between the materials (e.g., contact is not necessarily required). The term "on", "over", or "overlying" does not imply any directionality as used herein unless otherwise explicitly stated as such.

FIG. **6** shows memory device **500** after data lines **651**, **652**, and **653** and device structures **605** have been formed. A process such as etching (e.g., dry etching) can be used to remove portions of materials **504** and **505** (FIG. **5**) to form trenches **511** and **512**, which have trench bottoms at material **502**. Each of data lines **651**, **652**, and **653** and each of device structures **605** has a greater dimension (e.g., length) extending in the X-direction. A mask (not shown in FIG. **6**) having separate openings extending in the X-direction can be used to form trenches **511** and **512**. As shown in FIG. **6**, trenches **511** and **512** divide material **504** (FIG. **5**) into separate data lines **651**, **652**, and **653**, which can correspond to data lines **251**, **252**, and **253** of FIG. **2**.

FIG. **7** shows memory device **500** after pillars **705** have been formed in area **701** of memory device **500**. Pillars **705** are not formed in area **702** of memory device **500**. For simplicity, FIG. **7** through FIG. **29** do not show substrate **503** of FIG. **6**. In FIG. **7**, a process such as etching (e.g., dry etch) can be used to remove portions of device structures **605** to form trenches **711**, **712**, and **713** in the Y-direction, perpendicular to trenches **511** and **512**, such that pillars **705** can be formed as shown in FIG. **7**. A mask (not shown in FIG. **7**) having separate openings extending in the Y-direction can be used to form trenches **711**, **712**, and **713**. Each pillar **705** can include a height in the Z-direction of approximately 20 to 50 nanometers. As shown in FIG. **7**, pillars **705** are arranged in rows and columns (e.g., in a matrix) in the X-direction and Y-direction. For simplicity, FIG. **7** does not show a dielectric material filled in trenches **511** and **512**. However, forming memory device **500** in FIG. **7** also can include forming a dielectric material (e.g., silicon oxide) to fill trenches **511** and **512** up to a top surface **715** of device structure **605**.

FIG. **8** shows memory device **500** after dielectric **831** and select lines **841**, **842**, **843**, and **844** have been formed. Select lines **841**, **842**, **843**, and **844** can correspond to select lines **241**, **242**, **243**, and **244**, respectively, of FIG. **3**. In FIG. **8**, dielectrics **831** are formed to electrically isolate select lines **841**, **842**, **843**, and **844** from pillars **705**. Dielectrics **831** can be formed by, for example, depositing a dielectric material (e.g., silicon oxide) on at least two sides of each pillar **705** or by oxidizing pillars **705**. After dielectrics **831** are formed, select lines **841**, **842**, **843**, and **844** can be formed by, for example, depositing a conductive material over pillars **705** and trenches **711**, **712**, and **713** (FIG. **7**) and then removing (e.g., etching) a portion of the conductive material to form select lines **841**, **842**, **843**, and **844** having the structure shown in FIG. **8**. Examples of the conductive materials for select lines **841**, **842**, **843**, and **844** include polysilicon, metal, or other conductive materials, such as TiN and TaN.

FIG. **8** also shows doped regions **833**, which can be formed by inserting (e.g., implanting) n-type impurities into selective portions of device structure **605**. Examples of n-type impurities include elements such as phosphorus (P) or arsenic (As). The remaining portion of device structures **605** that has not been inserted with n-type impurities may maintain its original material, such as p-type silicon, as described above with reference to FIG. **5**.

FIG. **9** shows memory device **500** with select lines **941**, **942**, **943**, and **944**, which are alternative structures for select lines **841**, **842**, **843**, and **844** of FIG. **8**. In FIG. **8**, opposite sides of each pillar **705** are associated with two different segments of the same select line **841**, **842**, **843**, or **844**. In FIG. **9**, except for the top surfaces of pillars **705**, each pillar **705** can be completely surrounded by the material of one of the select line **941**, **942**, **943**, or **944** (e.g., four sides of each pillar **705** are associated with four different segments of the same select line). Higher efficient memory device may be achieved with select lines **941**, **942**, **943**, and **944** in comparison to select lines **841**, **842**, **843**, and **844**. Select lines **941**, **942**, **943**, and **944** can also be alternative structures for select lines **241**, **242**, **243**, and **244**, respectively, of FIG. **3**. Thus, each transistor **231** of FIG. **2** and FIG. **3** can include a surrounded gate with a structure shown in FIG. **9**. Thus, instead of a double-gate shown in FIG. **3**, each transistor **231** of FIG. **3** can alternatively include a surrounded gate having four different segments of the same select line (such as select line **941**) surrounding body **391** (FIG. **3**).

FIG. **10** shows memory device **500** after materials **1001** through **1007** are formed over pillars **705** and select lines **841**, **842**, **843**, and **844**. Materials **1001** through **1007** can be formed in both areas **701** and **702** of memory device **500**. However, to focus on the description herein, FIG. **10** does not show some portions of materials **1001** through **1007** in area **702**. The description below with reference to FIG. **28** and FIG. **29** describes forming additional components (e.g., components similar to contacts **329** of FIG. **3**) in area **702** of memory device **500**.

In FIG. **10** through FIG. **29**, for simplicity, some number designations associated with some components of memory device **500** may not be repeated from one figure to another figure. In FIG. **10**, before forming materials **1001** through **1007**, a dielectric material (not shown in FIG. **10**), such as silicon oxide, can be formed to fill gaps **1041**, **1042**, and **1043**. Forming materials **1001** through **1007** can include alternately depositing dielectric material and conductive material in an interleave fashion, such that these materials are alternately

stacked over each other in the Z-direction, as shown in FIG. **10**. Materials **1001**, **1003**, **1005**, and **1007** can include dielectric materials, such as silicon oxide. Materials **1002**, **1004**, and **1006** can include conductive materials, such as metal or polysilicon (e.g., n-type silicon for p-type silicon). As shown in FIG. **10**, materials **1001** through **1007** are formed such that materials **1002**, **1004**, and **1006** are electrically isolated from each other by materials **1001**, **1003**, **1005**, and **1007**.

FIG. **11** shows memory device **500** after openings (e.g., holes) **1101** have been formed in material **1002** through **1107**. Holes **1101** are formed such that each hole **1101** can be aligned substantially directly over a corresponding pillar **705**, as illustrated in FIG. **11**. Forming holes **1101** can include removing (e.g., etching) a portion of each of materials **1002** through **1007**, stopping at material **1001**, such that at least a portion of material **1001** or the entire material **1001** remains to separate holes **1101** from pillars **705**. Forming holes **1101** results in forming cavities **1110** in each of materials **1003**, **1005**, and **1007**, and cavities **1120** in each of materials **1002**, **1004**, and **1006**. As shown in FIG. **12**, cavities **1110** in the materials **1003**, **1005**, and **1007** are substantially aligned directly over cavities **1120** in the other materials **1002**, **1004**, and **1006**. Each cavity **1110** and each cavity **1120** may have substantially the same diameter, D**1**. Diameter D**1** can also be considered the diameter of each hole **1101** at the location of each cavity **1110** and each cavity **1120**.

FIG. **12** shows memory device **500** after cavities **1220** have been formed in materials **1002**, **1004**, and **1006** (used to form control gates **1221**, **1222**, and **1223**). Forming cavities **1220** can include enlarging the size of cavities **1120** (FIG. **11**) while keeping the size of cavities **1110** substantially unchanged (e.g., remaining substantially at diameter D**1**). For example, enlarging the size of cavities **1120** (FIG. **11**) can include selectively removing (e.g., selective wet or dry etching) a portion of each of materials **1002**, **1004**, and **1006** at each cavity **1120** (FIG. **11**) such that the diameter of each cavity **1220** increases to substantially diameter D**2**, while the diameter D**1** at each cavity **1110** remains substantially unchanged. Diameter D**2** is greater than diameter D**1**. Forming cavities **1120** in materials **1002**, **1004**, and **1006** also form control gates **1221**, **1222**, and **1223**, which can correspond to control gates control gates **221**, **222**, and **223** of FIG. **2**.

FIG. **13** shows more details of control gate **1221** of FIG. **12**. Control gates **1222** and **1223** of FIG. **12** have a similar structure as control gate **1221**. As shown in FIG. **13**, control gate **1221** can include a homogenous material with cavities **1220** of FIG. **11** being arranged in rows and columns in the X-direction and Y-direction. Each cavity **1220** can include a sidewall **1225**.

FIG. **14** and FIG. **15** shows memory device **500** after dielectrics **1421** and memory elements **1430** have been formed in cavities **1220**. For simplicity, FIG. **15** does not show dielectrics **1421** and memory elements **1430** in all cavities **1220**. Each dielectric **1421** can be formed on sidewall **1225**, such that each dielectric **1421** and can be located between the material of control gate **1221** and memory element **1430**, and such that memory element **1430** can be electrically isolated from the material of control gate **1221** by at least a portion of dielectric **1421**. Forming dielectric **1421** can include forming multiple materials **1422**, **1423**, and **1424** (FIG. **15**) at different times, one material after another. Forming material **1422** can include oxidizing a portion (e.g., a surface) of sidewall **1225** to form dielectric material (e.g., silicon oxide) on sidewall **1225**. Alternatively, forming material **1422** can include depositing dielectric material (e.g., silicon oxide) on sidewall **1225**. Forming material **1423** can include depositing dielectric material (e.g., silicon nitride) on material **1422**, wherein a portion of that dielectric material may also form on sidewall **1425** of each cavity **1110**. Forming material **1424** can include depositing dielectric material (e.g., silicon oxide) on material **1423**.

Memory elements **1430** can be formed after dielectrics **1421** are formed. As shown in FIG. **15**, each memory element **1430** has a ring shape (e.g., a donut shape) with an inner side **1451** and an outer side **1452** of FIG. **14**. Forming memory elements **1430** can include depositing a material in holes **1101**. Since cavities **1220** of FIG. **14** are substantially aligned with cavities **1110**, the material (that forms memory element **1430**) may fill both cavities **1110** and **1120**. Then, a portion (e.g., center portion in each hole) of the material that forms memory elements **1430** can be removed (e.g., by etching in the same, single, etching step) such that the material in cavities **1110** can be removed (e.g., completely removed) and the material in cavities **1220** is not completely removed but partially removed. As shown in FIG. **14**, after the material that forms memory elements **1430** is removed from cavities **1110**, a portion of dielectric material **1423** (e.g., silicon nitride, that was formed on material **1422**) may be exposed. As shown in FIG. **14**, after the material that forms memory elements **1430** is partially removed from cavities **1220**, memory element **1430** (formed by the remaining material in a cavity **1220**) associated with the same hole **1101** may have its inner side **1451** substantially aligned with sidewall **1425** (or sidewall **1425** with portions of materials **1422** and **1423** of cavities **1110**) of cavities **1110**.

The material of memory elements **1430** can include, for example, semiconductor material (e.g., polysilicon), dielectric charge trapping material, such as silicon nitride or other dielectric charge trapping materials, or a variable resistance material, such as a phase change material (e.g., GST). During removing (e.g., etching) a portion of the material that forms memory elements **1430**, portions **1401** of material **1001** located over pillars **705** can also be removed to reduce the thickness of portions **1401**.

FIG. **16** and FIG. **17** show memory device **500** after dielectric **1627** has been formed on inner side **1451** of memory element **1430** and in cavities **1110**. Forming dielectric **1627** can include depositing dielectric material (e.g., silicon oxide) on inner side **1451**. Alternatively, forming dielectric **1627** can include oxidizing a portion (e.g., inner side **1451**) of memory element **1430**. Forming dielectric **1627** (e.g., by oxidation) may also consume material **1423** (FIG. **14**) formed on material **1422**, which formed on sidewall **1425** of cavities **1110**. Thus, dielectric **1627** may also form in cavities over material **1422**.

FIG. **18** and FIG. **19** show memory device **500** after channels **1841** have been formed on dielectrics **1627** in both cavities **1110** and **1220**. Forming channels **1841** can include depositing a conductive material on dielectrics **1627**. An etching process can be used to reduce the thickness of the conductive material after it is deposited. The conductive material of channels **1841** can include doped polysilicon, which can have the same material type (e.g., p-type) as pillars **705**. FIG. **18** also shows a formation of openings **1801**, which can be formed by removing (e.g., by etching) portions **1401** (FIG. **14**) located over pillars **705**. As shown in FIG. **19**, channel **1841** is facing memory elements **1430** and is electrically isolated from memory element **1430** by at least a portion of dielectric **1627**.

FIG. **20** shows memory device **500** after a conductive material **2001** has been formed by, for example, depositing undoped or lightly doped polysilicon to place channels **1841** in electrical communication with pillars **705**. As shown in

FIG. **20**, conductive material **2001** forms a continuous conductive path between channels **1841** and data lines **651**, **652**, and **653** through pillars **705**.

FIG. **21** shows memory device **500** after dielectric material **2101** (e.g., silicon oxide) has been formed over conductive material **2001**.

FIG. **22** shows memory device **500** after a formation of openings (e.g., holes **2201**), a conductive material portion **2260**, and conductive material portions **2241**. Holes **2201** are formed such that each hole **2201** can be aligned substantially directly over channels **1841**, as illustrated in FIG. **22**. Forming holes **2201** can include removing (e.g., etching) a portion of dielectric material **2101** and a portion of conductive material **2001** (FIG. **21**), stopping at a location in material **1007**. Holes **2201** can be formed such that after a portion of conductive material **2001** is removed during the formation of holes **2201**, conductive material **2001** is separated into conductive material portion **2260** and conductive material portions **2241**, as illustrated in FIG. **22**.

FIG. **23** shows memory device **500** after doped regions **2301** have been formed. Forming doped regions **2301** can include inserting (e.g., implanting) n-type impurities into top parts of conductive material portions **2241**. Doped regions **2301** can provide a relatively low resistance connection between channels **1841** and other components of memory device **500**.

FIG. **24** shows memory device **500** after dielectrics **2401** and channels **2402** have been formed. Dielectrics **2401** (e.g., silicon oxide) is formed on sidewalls of conductive material portion **2260** at the location of holes **2201**. Channels **2402** are formed on sidewalls of dielectric material **2101** and on dielectrics **2401**.

FIG. **25** shows memory device **500** after conductive material **2501** has been formed in each of holes **2201**, such that channel **2402** can be electrically coupled to channel **1841** through conductive material **2501**, doped region **2301**, and conductive material portion **2241**. Forming conductive material **2501** in each of holes **2201** can include depositing a conductive material (e.g., polysilicon) over material, such that the conductive material fills holes **2201**. Then, a top portion of the conductive material can be removed by, for example, etching back the conductive material or by chemical mechanical planarization (CMP).

FIG. **26** shows memory device **500** after doped regions **2601** and select lines **2661**, **2662**, and **2663** have been formed. Forming doped regions **2601** can include inserting (e.g., implanting) n-type impurities into top portions of conductive material **2501**. Forming select lines **2661**, **2662**, and **2663** can include removing parts of dielectric material **2101** and conductive material portion **2260** to form trenches **2602**, which have trench bottoms partially extending into material **1007**. As shown in FIG. **26**, trenches **2602** separate conductive material portion **2260** into select lines **2661**, **2662**, and **2663**, which can correspond to select lines **261**, **262**, and **263** of FIG. **2**.

FIG. **27** shows memory device **500** after material **2701** and a common source **2770** have been formed. Forming material **2701** can include depositing a dielectric material (e.g., silicon dioxide) over material **2101**, such that the dielectric material fills trenches **2602**. Then, a top portion of the dielectric material can be removed by, for example, etching back the dielectric material or by CMP. Forming common source **2770** can include depositing a conductive material (e.g., metal) over materials **2701** and **2101**.

FIG. **28** shows memory device **500** after materials **1001** through **1007** in area **702** (FIG. **10**) are processed (e.g., by patterning) to form a stair like pattern with material between the stairs are not shown in FIG. **28**. As mentioned above in the description of FIG. **10**, some portions of materials **1001** through **1007** are omitted from area **702** of FIG. **10** through FIG. **27** for clarity. FIG. **28** shows material **1001** through **1007** in area **702** after they have been processed to form the stair like pattern. As shown in FIG. **28**, control gates **1221**, **1222**, and **1223** are formed from materials **1002**, **1004**, and **1006**, respectively, which are formed in the stair like pattern.

FIG. **29** shows memory device **500** after contacts **2929**, **2949**, and **2959** have been formed. Contacts **2929** provide electrical connections to control gates **1221**, **1222**, and **1223**. Contacts **2949** provide electrical connections to select lines **841**, **842**, **843**, and **844**. Contacts **2959** provide electrical connections to and from data lines **651**, **652**, and **653**.

As shown in FIG. **29**, memory device **500** can include components and memory cells **2910**, **2911**, and **2912** similar to or identical to components and memory cells **210**, **211**, and **212** of memory device **300** described above with reference to FIG. **2** and FIG. **3**.

One skilled in the art may readily recognize that additional processes may be performed to form additional features of a memory device, such as memory device **500** described above. Thus, to help focus on the embodiments described herein, FIG. **5** through FIG. **29** described above and FIG. **30** through FIG. **38** described below show only some of the features of a memory device, such as memory device **500**.

FIG. **30** shows a schematic diagram of a portion of a memory device **300** having data lines **251**, **252**, and **253** located above memory cells **210**, **211**, and **212**, according to an embodiment of the invention. Memory device **300** can include components similar to those of memory device **200** of FIG. **3**. Thus, for simplicity, similar or same components between memory device **200** and memory device **3000** are given the same number designations. The detailed description of these similar components is not repeated in FIG. **30**. Main differences between memory device **3000** and memory device **200** include the locations of data lines **251**, **252**, and **253** and common source **3070** of memory device **3000** to enable global erase operation. As shown in FIG. **30**, data lines **251**, **252**, and **253** are located above memory cells **210**, **211**, and **212**. Common source **3070** is located below memory cells **210**, **211**, and **212** and can couple directly to at least a portion of a substrate of memory device **3000** (e.g., substrate **3101** in FIG. **31**). This main difference may allow voltages to be applied to various components of memory device **3000** in a different way during an erase operation and memory device **3000** function differently (e.g., during the global erase operation) in comparison with the erase operation (e.g., local erase operation) of memory device **200**. For example, in an erase operation of memory device **3000**, a voltage of approximately 20 volts can be applied to common source **3070**, while control gates **221**, **221**, and **223**, data lines **251**, **252**, and **253**, select lines **241**, **242**, and **243**, and select lines **261**, **262**, and **26** can be "floated". In this erase operation, electrons from memory elements of memory cells **210**, **211**, and **212** may move (e.g., by tunneling) to common source **3070** (e.g., global erase). In memory **200**, as described above with reference to FIG. **2**, FIG. **3**, and FIG. **4**, during an erase operation, electrons from memory elements of memory cells **210**, **211**, and **212** may move to data lines **251**, **253**, and **253** (e.g., local erase)

FIG. **31** shows a 3D view of a portion of the memory device **3000** of FIG. **30**, according to an embodiment of the invention. As shown in FIG. **31**, data lines **251**, **252**, and **253** are located above memory cells **210**, **211**, and **212**, common source **3070** is located below memory cells **210**, **211**, and **212** and is coupled to a substrate **3101**. Substrate **3101** can include semiconductor material, such as p-type silicon.

As shown in FIG. **31**, memory cells **210**, **211**, and **212** in each string (e.g., memory cells between transistors **231** and **232**) are substantially vertically aligned in the Z-direction with respect to substrate **3101**. Transistor **232** can include a double-gate or surrounded gate similar to the double-gate (FIG. **3**) or surrounded gate (FIG. **9**) of transistor **231** of FIG. **3**. FIG. **31** also shows a channel **441** and a conductive material portion **442** extending vertically in the Z-direction and through memory element **430** of memory cells **210**, **211**, and **212** in the same string between transistors **231** and **232**, which corresponds to transistors **231** and **232** of FIG. **30**.

Memory element **430** in each of memory cells **210**, **211**, and **212** has a ring shape. As shown in FIG. **31**, within memory cells **210**, **211**, and **212** in the same string, the entire ring-shape memory element **430** of each memory cell is substantially vertically aligned (in the Z-direction) with the entire ring-shape memory element of each of the other memory cells in the same string.

FIG. **32** through FIG. **38** show various processes of forming a memory device **3200** having data lines located above memory cells, according to an embodiment of the invention. Memory device **3200** (shown in more details in FIG. **38**) can correspond to memory device **3000** of FIG. **31**.

FIG. **32** shows memory device **3200** having a substrate **3201** and trenches **3211**, **3212**, and **3213**, and substrate portions **3270** and **3271** formed on a top portion of substrate **3201**. Substrate **3201** can include semiconductor material, such as bulk silicon. Top substrate portions **3270** and **3271** can be formed by inserting (e.g., implanting) p-type impurities into a top portion of substrate **3201**. Thus, substrate portions **3270** and **3271** can include p-type silicon. Forming trenches **3211**, **3212**, and **3213** and substrate portion **3270** can include removing (e.g., etching) a portion of substrate portion **3271**. During a write or read operation of memory device **3200**, substrate portion **3270** can be coupled to a potential, such as to ground. During an erase operation of memory device **3200**, substrate portion **3270** can be coupled to a voltage, for example, approximately 20 volts.

FIG. **33** shows memory device **3200** after material **3301** has been formed in trenches **3211**, **3212**, and **3213** (FIG. **32**). Forming material **3301** can include depositing dielectric material (e.g., silicon oxide) over substrate **3201** to fill trenches **3211**, **3212**, and **3213**. Then, a top portion of the dielectric material can be removed by, for example, CMP.

FIG. **34** shows memory device **3200** after material **3401** and trenches **3411**, **3412**, and **3413**, and device structures **3460** have been formed. Forming material **3401** can include depositing dielectric material (e.g., silicon oxide, or silicon nitride) over substrate **3201** and material **3301**. Forming trenches **3411**, **3412**, and **3413** can include removing (e.g., etching) portions of substrate **3201**, material **3301**, and material **3401**. Device structures **3460** are formed as a result of the formation of trenches **3411**, **3412**, and **3413**.

FIG. **35** shows memory device **3200** after a formation of doped regions **3501**, material **3502**, and select lines **3561**, **3562**, and **3563**. Forming doped regions **3501** can include inserting (e.g., implanting) n-type impurities into selective portions of substrate portion **3271**. Material **3502** (e.g., silicon oxide) can be formed on both sides of each device structure **3460** to electrically isolate select lines **3561**, **3562**, and **3563** from device structures **3460**. Materials of select lines **3561**, **3562**, and **3563** can include one or more conductive materials, such as one or more metals, alloys, other conductive materials, or a combination thereof. Select lines **3561**, **3562**, and **3563** can correspond to select lines **261**, **262**, and **263** of memory device **3000** of FIG. **30**.

FIG. **36** shows memory device **3200** after material **3601** have been formed in trenches **3411**, **3412**, and **3413**. Forming material **3601** can include depositing dielectric material (e.g., silicon dioxide) to fill trenches **3411**, **3412**, and **3413**. Then, a top portion of the dielectric material can be removed by, for example, etching back the conductive material or by CMP, stopping at substrate portion **3270**.

FIG. **37** shows memory device **3200** after grooves **3701** have been formed by removing (e.g., by wet etching) a top portion of the material used to form select lines **3561**, **3562**, and **3563**. Alternatively, forming grooves **3701** can be omitted.

FIG. **38** shows memory device **3200** after other components have been formed. The processes for forming the components of memory device **3200** in FIG. **38** can include similar or identical processes for forming the component of memory device **500** described above with reference to FIG. **10** through FIG. **29**. For example, control gates **3821**, **3822**, and **3823** of FIG. **38** can be formed using processes similar to or identical to those of forming control gates **1221**, **1222**, and **1223** of memory device **500** described above with described above with reference to FIG. **5** through FIG. **29**. Data lines **3851**, **3852**, and **3853** of FIG. **38**, can correspond to data lines **251**, **252**, and **253** of FIG. **30** and FIG. **31**. As shown in FIG. **38**, memory device **3200** can include memory cells **3810**, **3811**, and **3812**, which can be formed using processes similar to or identical to those of forming memory cells **2910**, **2911**, and **2912** of memory device **500** described above with reference to FIG. **5** through FIG. **29**.

One or more embodiments described herein include a memory device and methods of forming the memory device. One such memory device can include a first group of memory cells, each cell of the first group being formed in a respective cavity of a first control gate located in one device level of the memory device. The memory device also can include a second group of memory cells, each cell of the second group being formed in a cavity of in a second control gate located in another device level of the memory device. Additional apparatus and methods are described. Other embodiments including additional apparatus and methods are described above with reference to FIG. **1** through FIG. **38**.

The illustrations of apparatus such as memory devices **100**, **200**, **500**, **3000**, and **3200**, and memory cells **210**, **211**, **212**, **2910**, **2911**, **2912**, **3010**, **3811**, and **3812** are intended to provide a general understanding of the structure of various embodiments and not a complete description of all the elements and features of the apparatus that might make use of the structures described herein.

The apparatus of various embodiments may include or be included in electronic circuitry used in high-speed computers, communication and signal processing circuitry, memory modules, portable memory storage devices (e.g., thumb drives), single or multi-processor modules, single or multiple embedded processors, multi-core processors, data switches, and application-specific modules including multilayer, multichip modules. Such apparatus may further be included as sub-components within a variety of electronic systems, such as televisions, cellular telephones, personal computers (e.g., laptop computers, desktop computers, handheld computers, tablet computers, etc.), workstations, radios, video players, audio players (e.g., MP3 (Motion Picture Experts Group, Audio Layer 3) players), vehicles, medical devices (e.g., heart monitor, blood pressure monitor, etc.), set top boxes, and others.

The above description and the drawings illustrate some embodiments of the invention to enable those skilled in the art to practice the embodiments of the invention. Other embodi-

ments may incorporate structural, logical, electrical, process, and other changes. Examples merely typify possible variations. Portions and features of some embodiments may be included in, or substituted for, those of others. Many other embodiments will be apparent to those of skill in the art upon studying and understanding the above description.

The Abstract is provided to comply with 37 C.F.R. §1.72(b) requiring an abstract that will allow the reader to quickly ascertain the nature and gist of the technical disclosure. The Abstract of the Disclosure is submitted with the understanding that it will not be used to interpret or limit the scope or meaning of the claims.

What is claimed is:

1. An apparatus comprising:

a substrate of a memory device;

a plurality of first memory cells located in a first device level of the memory device over the substrate;

a plurality of second memory cells located in a second device level of the memory device over the first device level and over the substrate, wherein the first device level is different from the second device level;

a first control gate formed in the first device level, the first control gate to control access to the first memory cells, wherein each of the first memory cells includes a memory element formed in a cavity of the first control gate;

a second control gate formed in the second device level, the second control gate to control access to the second memory cells, wherein each of the second memory cells includes a memory element formed in a cavity of the second control gate; and

data lines configured to be selectively coupled to a common source and the memory cells through conductive material.

2. The apparatus of claim **1**, wherein the first and second memory cells include multiple memory cells arranged in a first direction and multiple memory cells arranged in a second direction,

the conductive material extending through the first and second memory cells in a third direction, the third direction being substantially perpendicular to the first and second directions.

3. The apparatus of claim **2**, wherein the common source is formed over a substrate of the memory device, such that the common source is between the first and second memory cells and the substrate to allow electrons from the memory element of at least one of the first and second memory cells to move to the common source during an erase operation.

4. The apparatus of claim **1**, wherein the first memory cells are substantially vertically aligned with the second memory cells.

5. The apparatus of claim **1**, wherein the memory element of each of the first memory cells is substantially vertically aligned with the memory element of one of the second memory cells.

6. The apparatus of claim **1**, further comprising transistors to selectively couple the first and second memory cells to the data lines associated with the first and second memory cells during a memory operation of the memory device, wherein at least one of the transistors comprises a double-gate.

7. The apparatus of claim **1**, further comprising transistors to selectively couple the first and second memory cells to the data lines associated with the first and second memory cells during a memory operation of the memory device, wherein at least one of the transistors comprises a surrounded gate.

8. An apparatus comprising:

a plurality of first memory cells located in a first device level of a memory device;

a plurality of second memory cells located in a second device level of the memory device;

a first control gate formed in the first device level, the first control gate to control access to the first memory cells, wherein each of the first memory cells includes a memory element formed in a cavity of the first control gate;

a second control gate formed in the second device level, the second control gate to control access to the second memory cells, wherein each of the second memory cells includes a memory element formed in a cavity of the second control gate, wherein the first and second memory cells include multiple memory cells arranged in a first direction and multiple memory cells arranged in a second direction;

a common source; and

data lines configured to be selectively coupled to the common source and the first and second memory cells through conductive material, the conductive material extending through the first and second memory cells in a third direction, the third direction being substantially perpendicular to the first and second directions, wherein the common source is formed over a substrate of the memory device, such that the first and second memory cells are between the common source and the substrate.

9. An apparatus comprising:

a first non-volatile memory cell including a first memory element, the first memory element having a ring shape, the first memory element located in a first device level of a memory device;

a second non-volatile memory cell including a second memory element, the second memory element having a ring shape, the second memory element located in a second device level of the memory device, wherein the first device level is different from the second device level;

a conductive material extending through the first and second memory elements; and

a data line configured to be selectively coupled to a common source and the first and second memory cells through the conductive material.

10. The apparatus of claim **9**, further comprising:

a first additional conductive material configured to operate as a control gate to access the first memory cell, wherein the first memory element and the first additional conductive material are located in the first device level of the memory device; and

a second additional conductive material configured to operate as a control gate to access the second memory cell, wherein the second memory element and the second additional conductive material are located in the second device level of the memory device.

11. The apparatus of claim **10**, wherein each of the first and second memory cells further includes a first dielectric between the respective memory element and the conductive material.

12. The apparatus of claim **11**, wherein each of the first and second memory cells further includes a second dielectric between the respective memory element and the respective additional conductive material.

13. The apparatus of claim **9**, wherein the data line is located between the substrate and the first memory cell.

14. The apparatus of claim **9**, wherein the first and second memory cells are located between the substrate and the data line.

15. An apparatus comprising:

a substrate of a memory device;

a first conductive material located in a first device level of the memory device over the substrate, the first conductive material including a first cavity, the first cavity having a first sidewall;

a second conductive material located in a second device level of the memory device over the first device level and over the substrate, the second conductive material including a second cavity, the second cavity having a second sidewall, wherein the first device level is different from the second device level;

a first dielectric formed on the first sidewall and the second sidewall;

a first memory element located in the first cavity and electrically isolated from the first conductive material by a first portion of the first dielectric;

a second memory element located in the second cavity and electrically isolated from the second conductive material by a second portion of the first dielectric;

a second dielectric formed on a side of the first memory element and on a side of the second memory element; and

a conductive channel extending from the first device level to the second device level and facing the first and second memory elements, such that the conductive channel is electrically isolated from the first and second memory elements by at least a respective portion of the second dielectric.

16. The apparatus of claim **15**, wherein the first and second memory elements comprise polysilicon.

17. The apparatus of claim **15**, wherein the first and second memory elements comprise a dielectric material.

18. The apparatus of claim **17**, wherein the dielectric material comprises silicon nitride.

19. The apparatus of claim **15**, further comprising dielectric material between the first and second conductive materials.

20. The apparatus of claim **15**, further comprising:

a data line configured to be selectively coupled to the conductive channel, wherein the first and second memory elements are located between the data line and the substrate.

21. An apparatus comprising:

a first conductive material located in a first device level of a memory device, the first conductive material including a first cavity, the first cavity having a first sidewall;

a second conductive material located in a second device level of the memory device, the second conductive material including a second cavity, the second cavity having a second sidewall;

a first dielectric formed on the first sidewall and the second sidewall;

a first memory element located in the first cavity and electrically isolated from the first conductive material by a first portion of the first dielectric;

a second memory element located in the second cavity and electrically isolated from the second conductive material by a second portion of the first dielectric;

a second dielectric formed on a side of the first memory element and on a side of the second memory element;

a conductive channel extending from the first device level to the second device level and facing the first and second memory elements, such that the conductive channel is electrically isolated from the first and second memory elements by at least a respective portion of the second dielectric;

a substrate; and

a data line configured to be selectively coupled to the conductive channel, wherein the data line is located between the second conductive material and the substrate.

* * * * *