US010475737B2

(12) **United States Patent**
Tang et al.

(10) **Patent No.: US 10,475,737 B2**
(45) **Date of Patent: *Nov. 12, 2019**

(54) **STACK OF HORIZONTALLY EXTENDING AND VERTICALLY OVERLAPPING FEATURES, METHODS OF FORMING CIRCUITRY COMPONENTS, AND METHODS OF FORMING AN ARRAY OF MEMORY CELLS**

(71) Applicant: **Micron Technology, Inc.**, Boise, ID (US)

(72) Inventors: **Sanh D. Tang**, Boise, ID (US); **Roger W. Lindsay**, Boise, ID (US); **Krishna K. Parat**, Palo Alto, CA (US)

(73) Assignee: **Micron Technology, Inc.**, Boise, ID (US)

(*) Notice: Subject to any disclaimer, the term of this patent is extended or adjusted under 35 U.S.C. 154(b) by 0 days.

This patent is subject to a terminal disclaimer.

(21) Appl. No.: **15/900,188**

(22) Filed: **Feb. 20, 2018**

(65) **Prior Publication Data**

US 2018/0175059 A1 Jun. 21, 2018

Related U.S. Application Data

(60) Continuation of application No. 15/397,919, filed on Jan. 4, 2017, now Pat. No. 9,929,175, which is a (Continued)

(51) **Int. Cl.**
H01L 27/1157 (2017.01)
H01L 23/52 (2006.01)
(Continued)

(52) **U.S. Cl.**
CPC ***H01L 23/52*** (2013.01); ***G11C 13/0007*** (2013.01); ***H01L 23/528*** (2013.01);
(Continued)

(58) **Field of Classification Search**
CPC . H01L 27/10; H01L 27/101; H01L 27/11556; H01L 27/1157; H01L 27/11582;
(Continued)

(56) **References Cited**

U.S. PATENT DOCUMENTS

5,414,285 A 5/1995 Nishihara
6,023,099 A 2/2000 Komuro
(Continued)

OTHER PUBLICATIONS

Katsumata et al., "Pipe-shaped BiCS Flash Memory with 16 Stacked Layers and Multi-Level-Cell Coperation for Ultra High Density Storage Devices", Toshiba Corporation, 2009 Symposium on VLSI Technology Digest of Technical Papers, pp. 136-137.
(Continued)

Primary Examiner — Cuong Q Nguyen
(74) *Attorney, Agent, or Firm* — Wells St. John P.S.

(57) **ABSTRACT**

A method of forming circuitry components includes forming a stack of horizontally extending and vertically overlapping features. The stack has a primary portion and an end portion. At least some of the features extend farther in the horizontal direction in the end portion moving deeper into the stack in the end portion. Operative structures are formed vertically through the features in the primary portion and dummy structures are formed vertically through the features in the end portion. Horizontally elongated openings are formed through the features to form horizontally elongated and vertically overlapping lines from material of the features. The lines individually extend from the primary portion into the end portion, and individually laterally about sides of vertically extending portions of both the operative structures and the dummy structures. Sacrificial material that is elevationally between the lines is at least partially removed in the primary and end portions laterally between the horizontally elongated openings. Other aspects and implementations are disclosed.

22 Claims, 18 Drawing Sheets

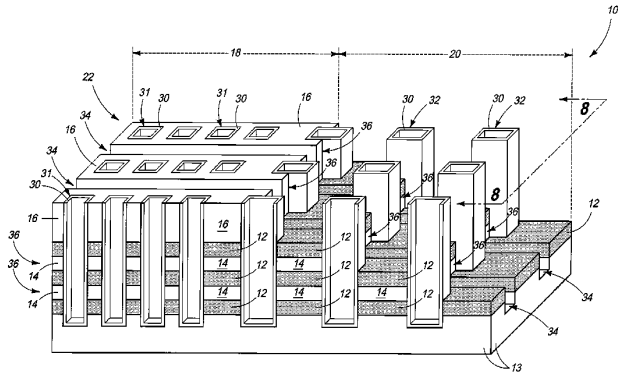

Related U.S. Application Data

continuation of application No. 15/095,208, filed on Apr. 11, 2016, now Pat. No. 9,564,471, which is a division of application No. 14/602,559, filed on Jan. 22, 2015, now Pat. No. 9,318,430, which is a division of application No. 13/085,083, filed on Apr. 12, 2011, now Pat. No. 8,945,996.

(51) **Int. Cl.**

H01L 27/10	(2006.01)
G11C 13/00	(2006.01)
H01L 23/528	(2006.01)
H01L 27/11556	(2017.01)
H01L 27/11582	(2017.01)
H01L 27/24	(2006.01)
H01L 45/00	(2006.01)
H01L 27/11524	(2017.01)

(52) **U.S. Cl.**

CPC ***H01L 27/10*** (2013.01); ***H01L 27/101*** (2013.01); ***H01L 27/1157*** (2013.01); ***H01L 27/11556*** (2013.01); ***H01L 27/11582*** (2013.01); ***H01L 27/249*** (2013.01); ***H01L 45/142*** (2013.01); ***H01L 45/143*** (2013.01); ***H01L 45/144*** (2013.01); ***H01L 45/146*** (2013.01); ***H01L 45/147*** (2013.01); *G11C 2213/11* (2013.01); *G11C 2213/31* (2013.01); *G11C 2213/32* (2013.01); *G11C 2213/71* (2013.01); *G11C 2213/75* (2013.01); *H01L 27/11524* (2013.01); *H01L 45/141* (2013.01); *H01L 45/145* (2013.01); *H01L 2924/0002* (2013.01)

(58) **Field of Classification Search**

CPC H01L 27/249; H01L 29/66825; H01L 29/788

See application file for complete search history.

(56) **References Cited**

U.S. PATENT DOCUMENTS

6,472,735	B2	10/2002	Isaak	
7,446,038	B2	11/2008	Jeng	
8,426,908	B2	4/2013	Higashi	
8,581,323	B2	11/2013	Uenaka et al.	
9,034,710	B2	5/2015	Sills	
9,929,175	B2 *	3/2018	Tang	H01L 27/101
2006/0148171	A1	7/2006	Lee	
2009/0309152	A1	12/2009	Knoefler et al.	
2010/0244119	A1 *	9/2010	Fukuzumi	H01L 27/11582 257/324
2011/0156132	A1	6/2011	Kiyotoshi	
2011/0199804	A1	8/2011	Son	
2012/0003831	A1	1/2012	Kang et al.	
2012/0052674	A1	3/2012	Lee et al.	
2014/0106569	A1	4/2014	Oh et al.	
2014/0162420	A1	6/2014	Oh et al.	
2014/0179068	A1	6/2014	Samachisa	

OTHER PUBLICATIONS

Komori et al., "Disturbless Flash Memory due to High Boost Efficiency on BiCS Structure and Optimal Memory Film Stack for Ultra High Density Storage Device", Center for Semiconductor Research & Development, Toshiba Corporation, IEEE, 2008, pp. 851-854.

Niklaus et al., "Wafer-Level 3D Integration Technology Platforms for ICs and MEMS", Research Paper, Center for Integrated Institute, Rennsselaer Polytechnic Institute (RPI); Jan. 2005; 8pp.

* cited by examiner

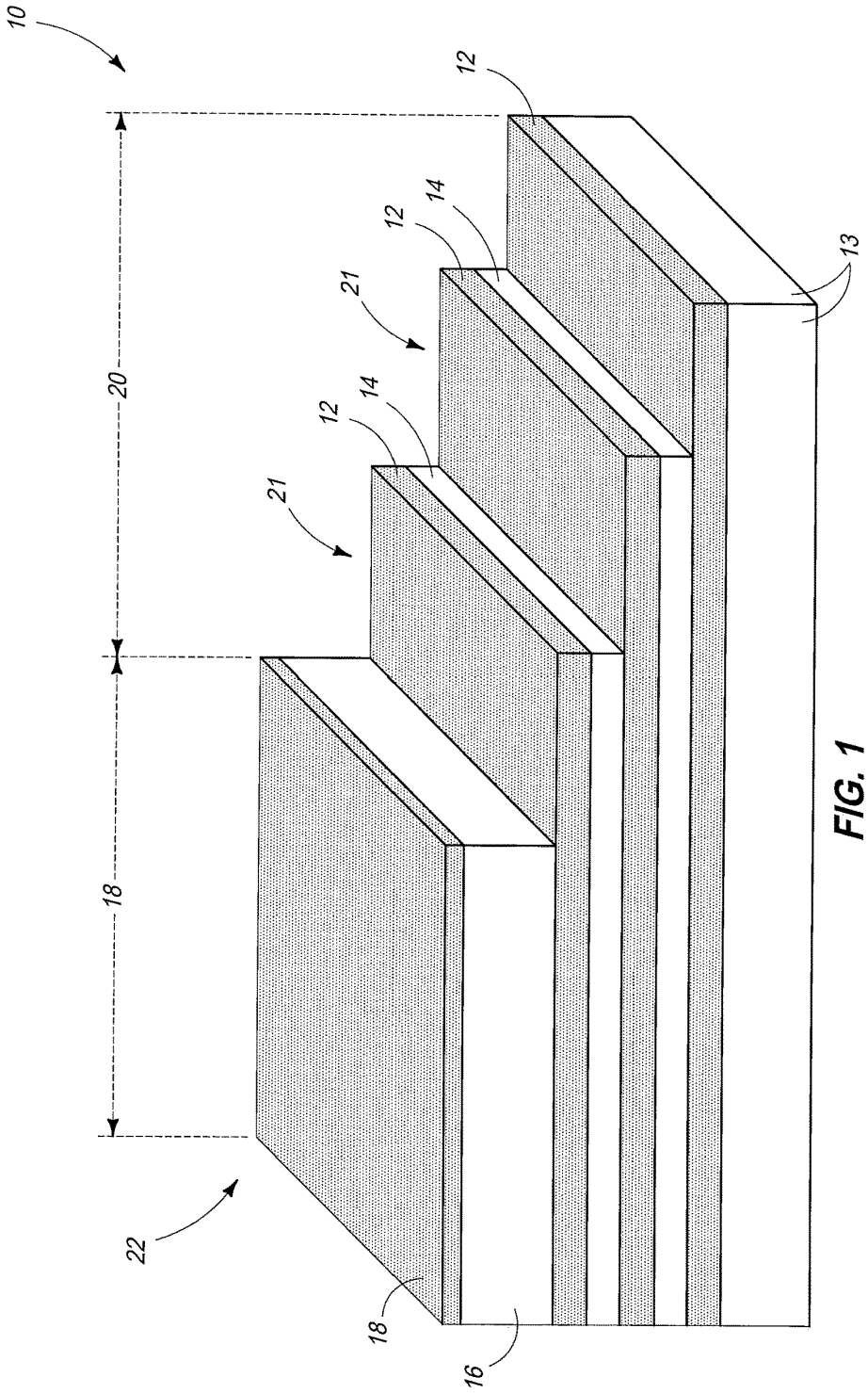

FIG. 1

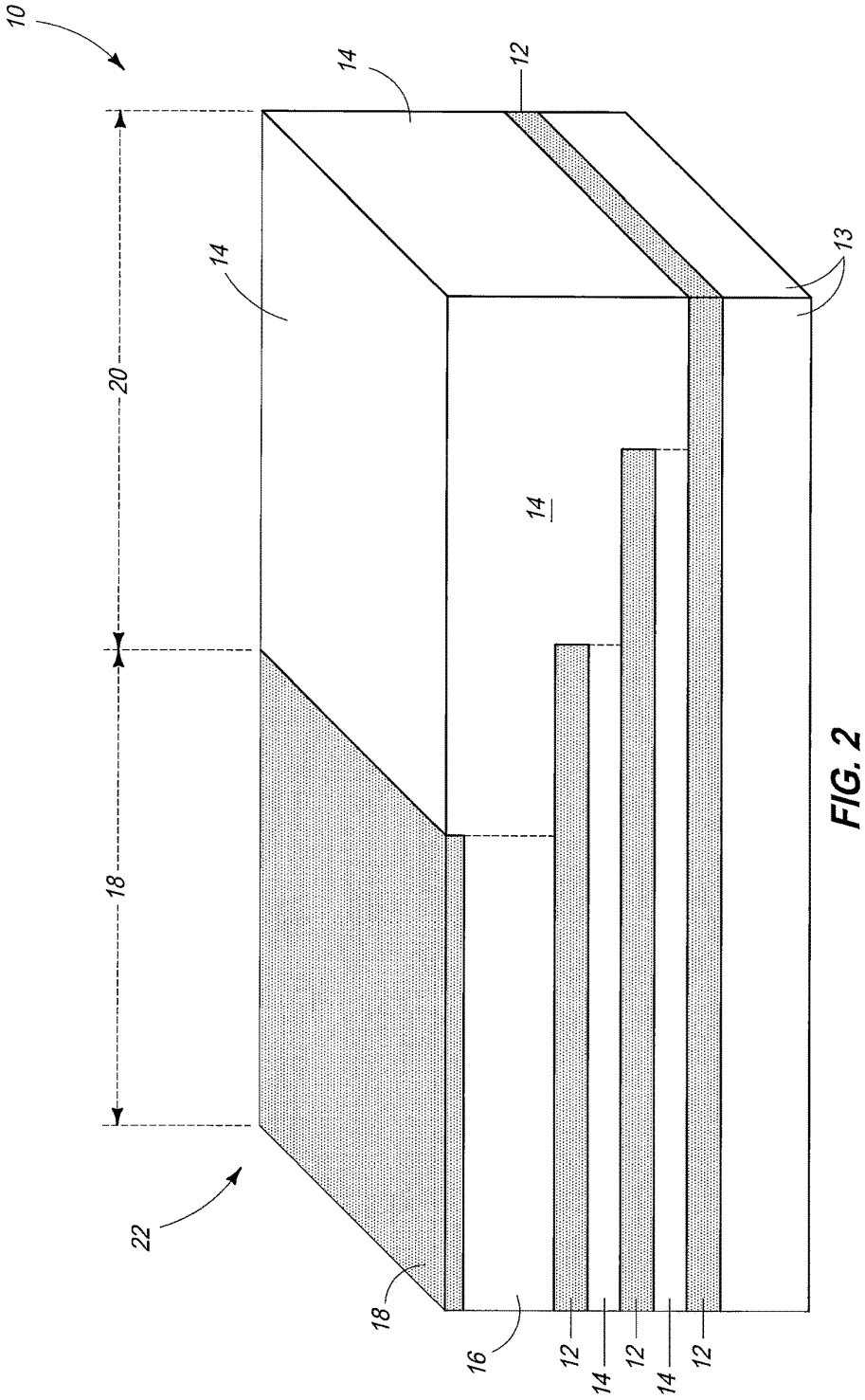

FIG. 2

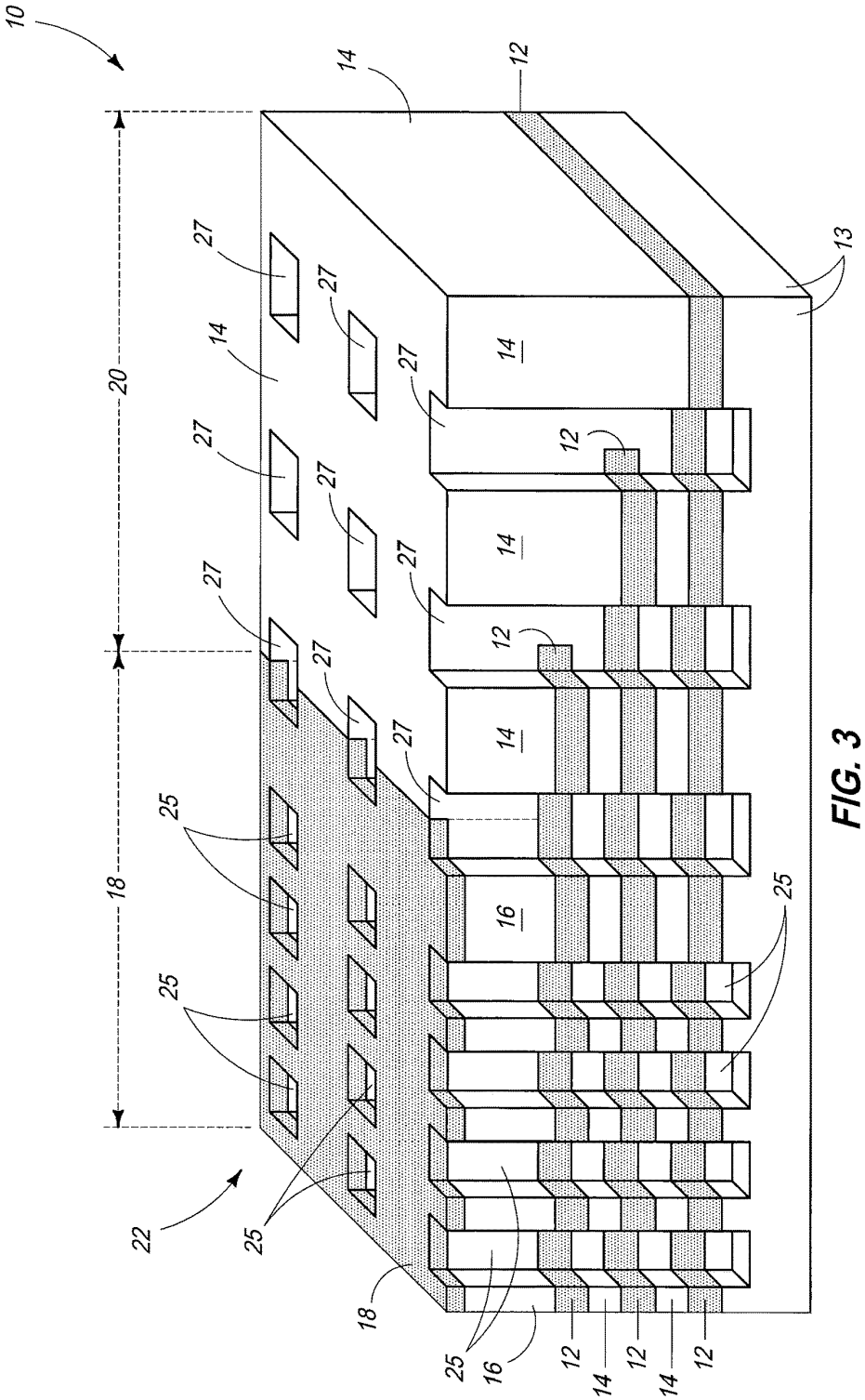

FIG. 3

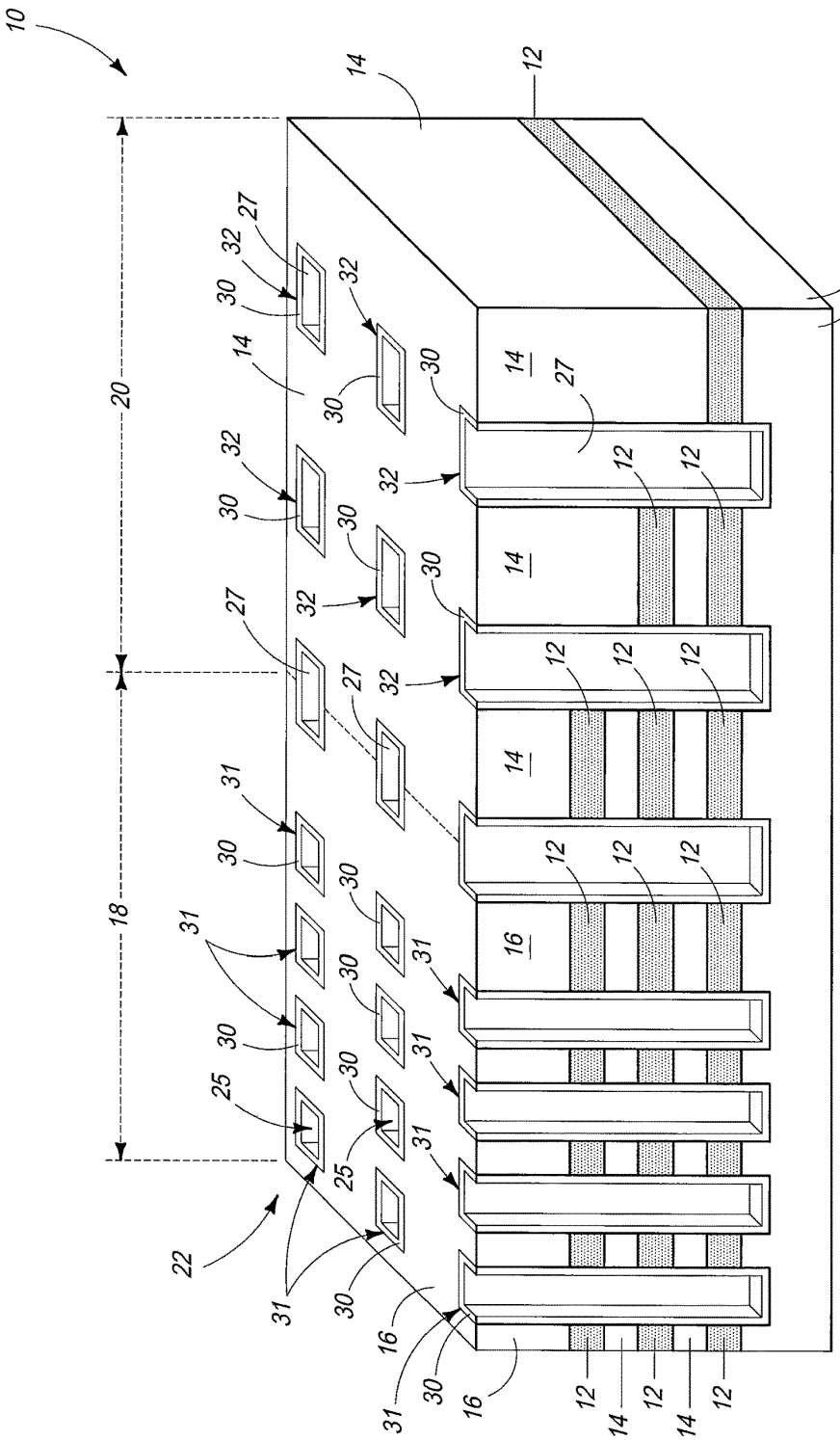

FIG. 4

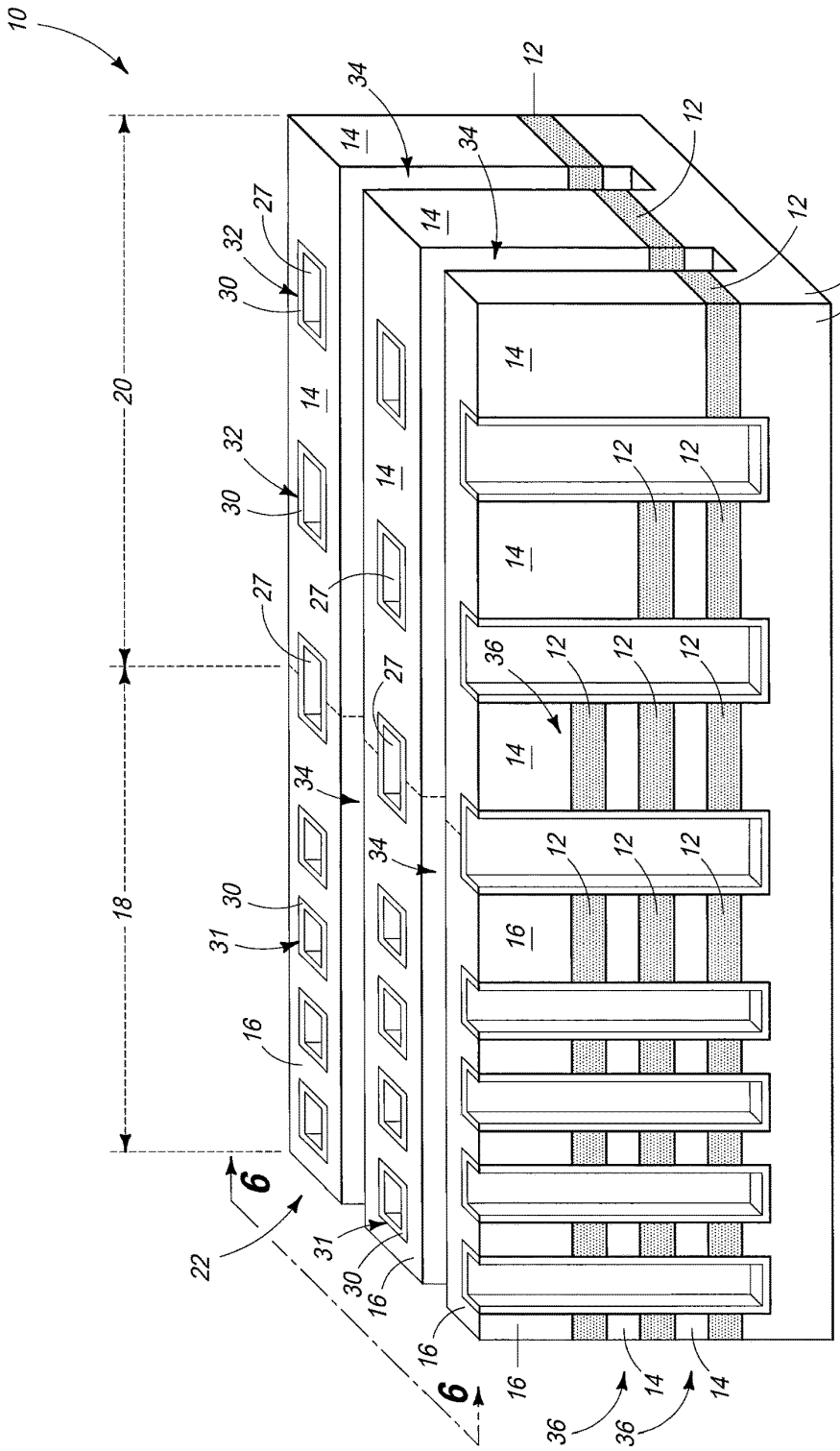

FIG. 5

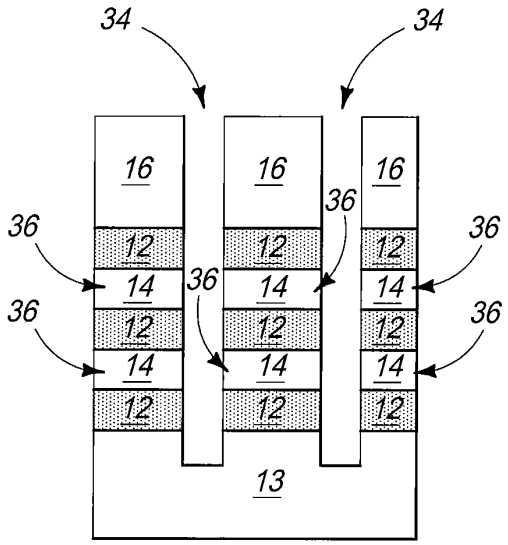
34
34
16
16
16
36
36
36
12
12
12
14
36
14
14
36
12
12
12
36
14
14
14
12
12
12
13

FIG. 6

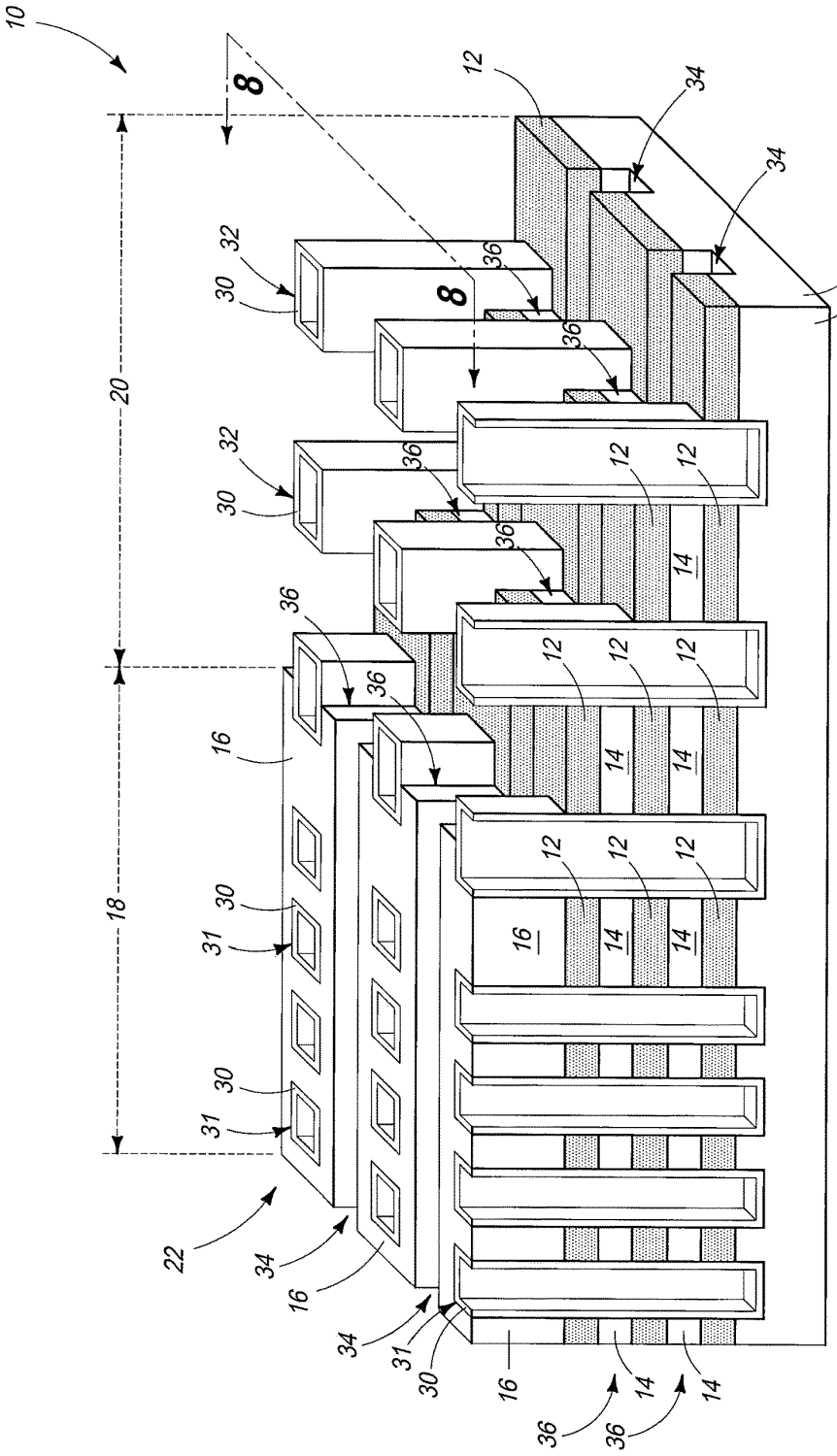
10
8
8
12
34
34
13
32
30
36
36
20
32
30
36
36
12
12
14
36
36
12
12
12
14
14
16
18
30
31
30
31
16
12
12
12
14
14
22
34
16
34
31
30
16
36
36
14
14

FIG. 7

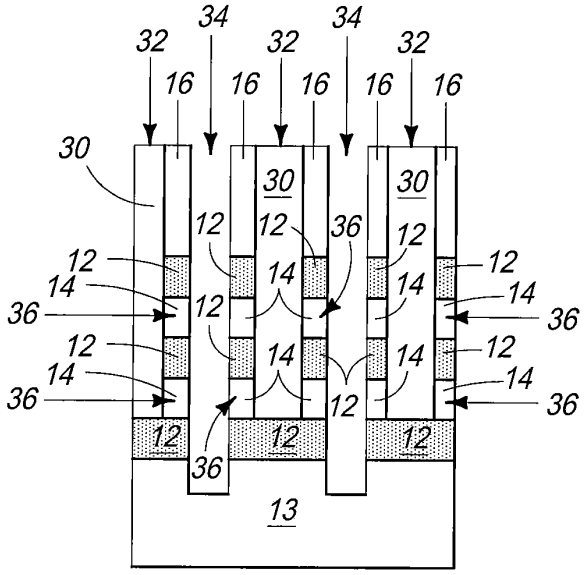
34
34
32
32
32
16
16
16
16
16
30
30
30
12
12
36
12
12
12
14
14
14
14
36
12
36
12
14
14
12
14
14
36
12
36
12
12
12
36
13

FIG. 8

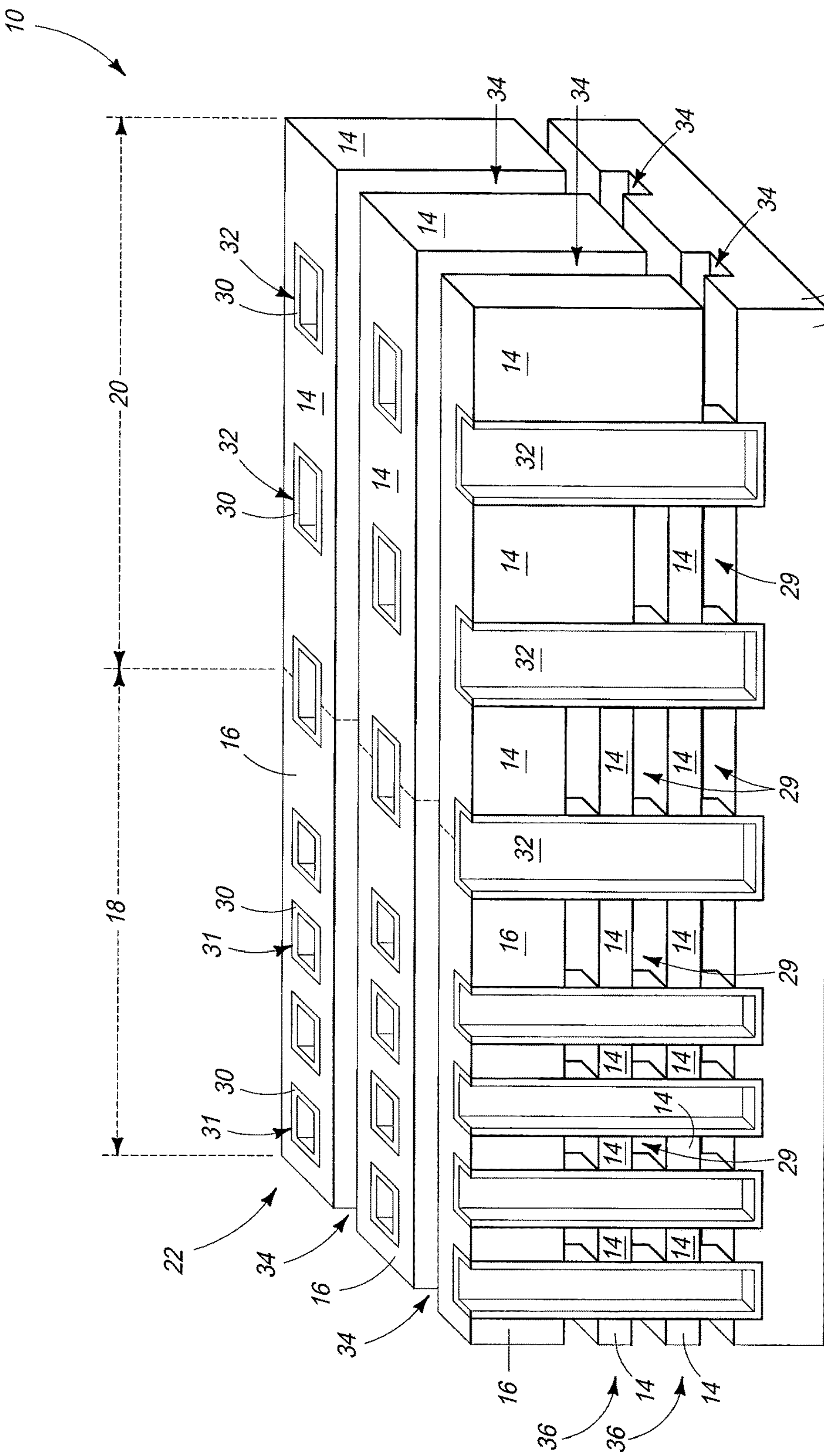
10
34
34
34
34
14
14
14
14
14
14
14
14
13
32
32
32
32
32
30
30
30
30
20
16
16
16
18
31
31
29
29
29
29
22
34
34
36
36

FIG. 9

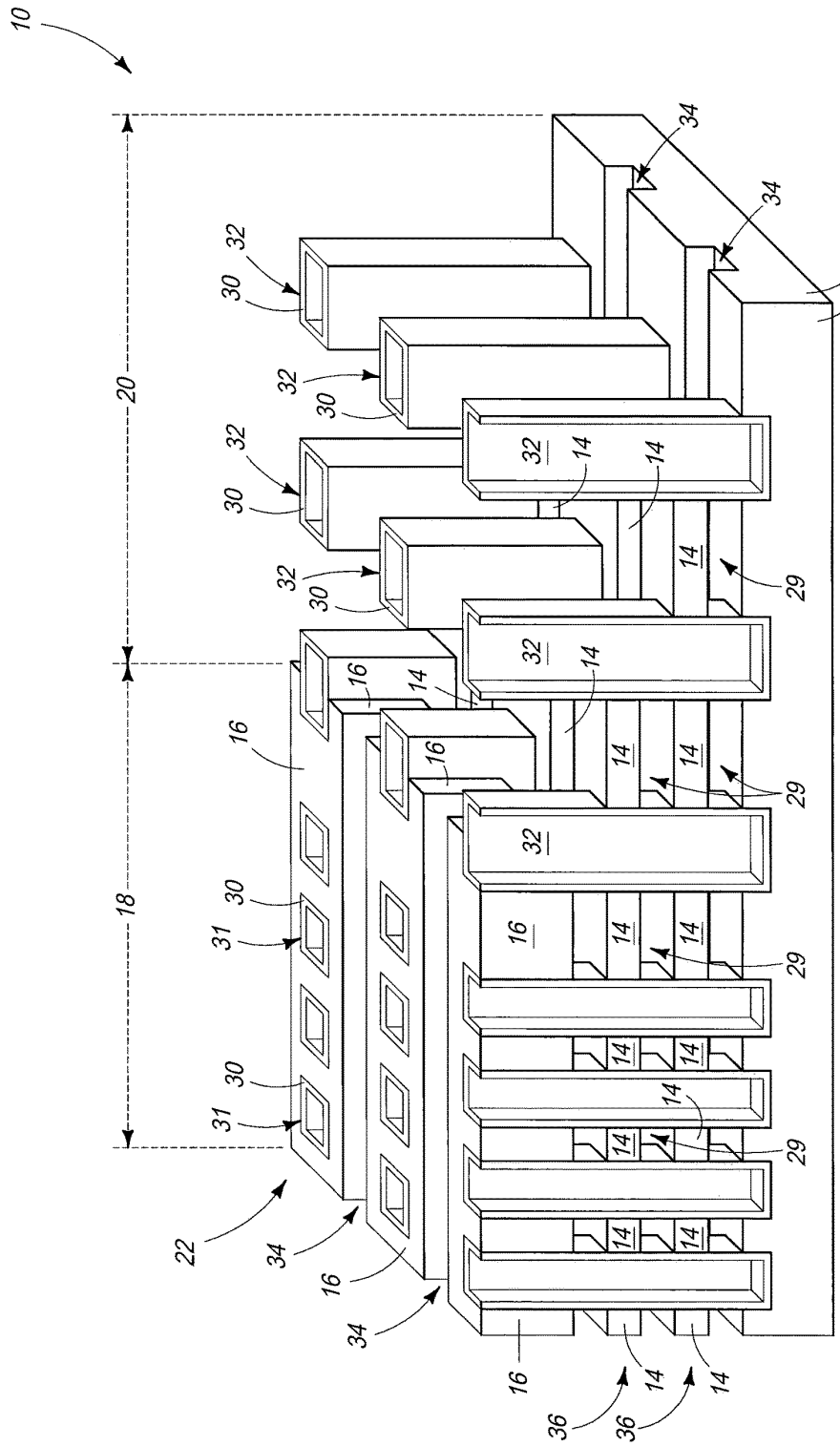

FIG. 10

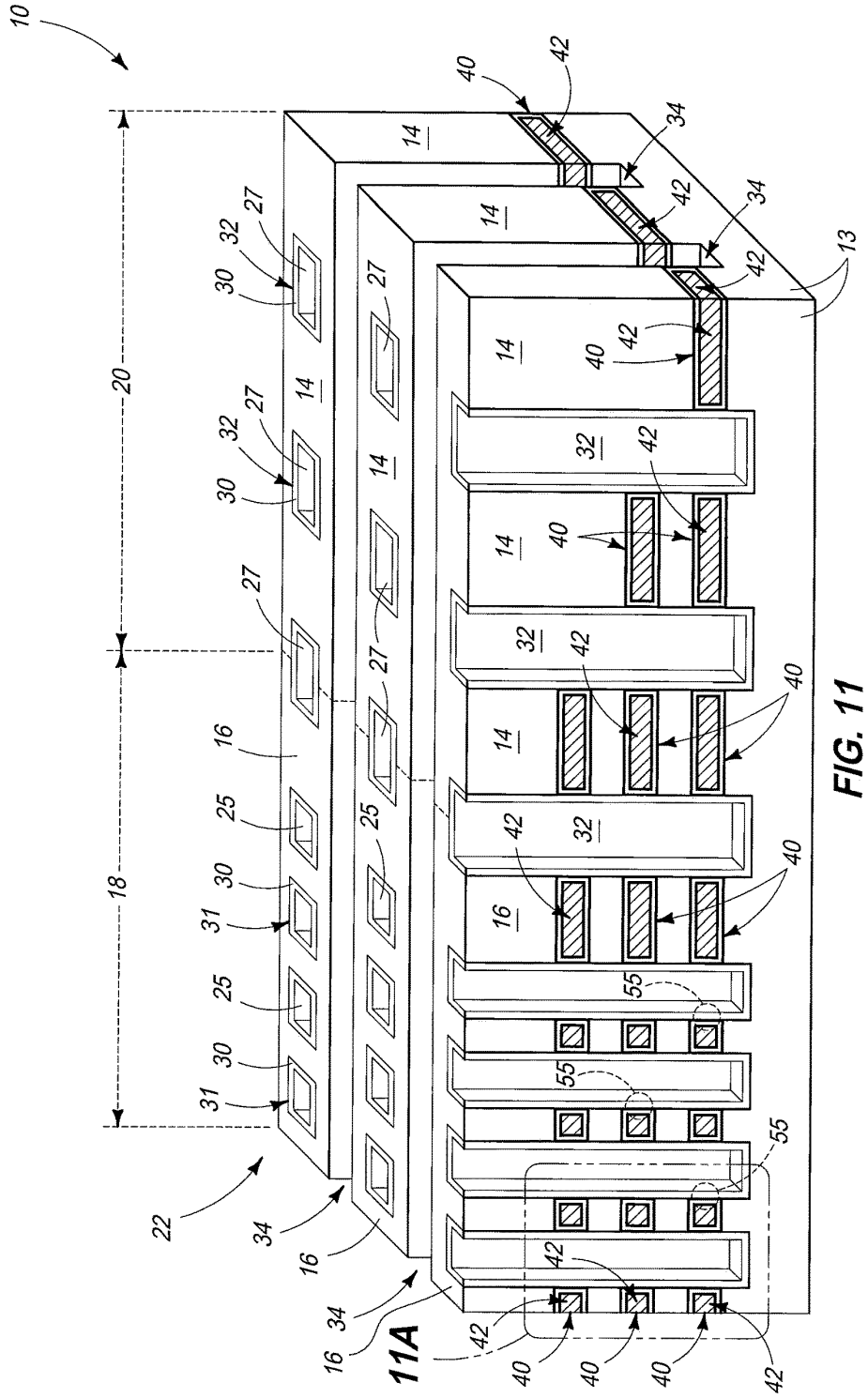

FIG. 11

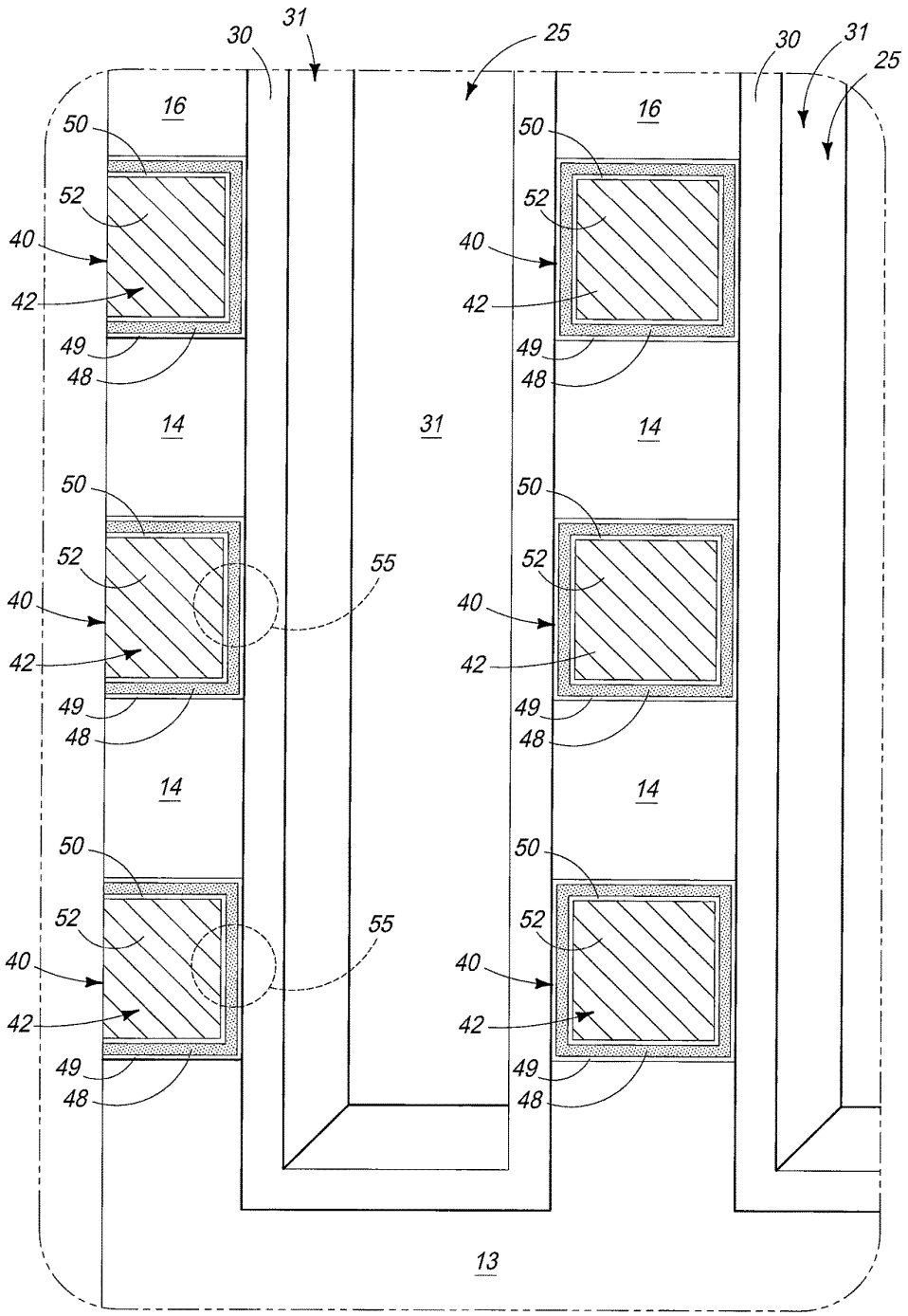

FIG. 11A

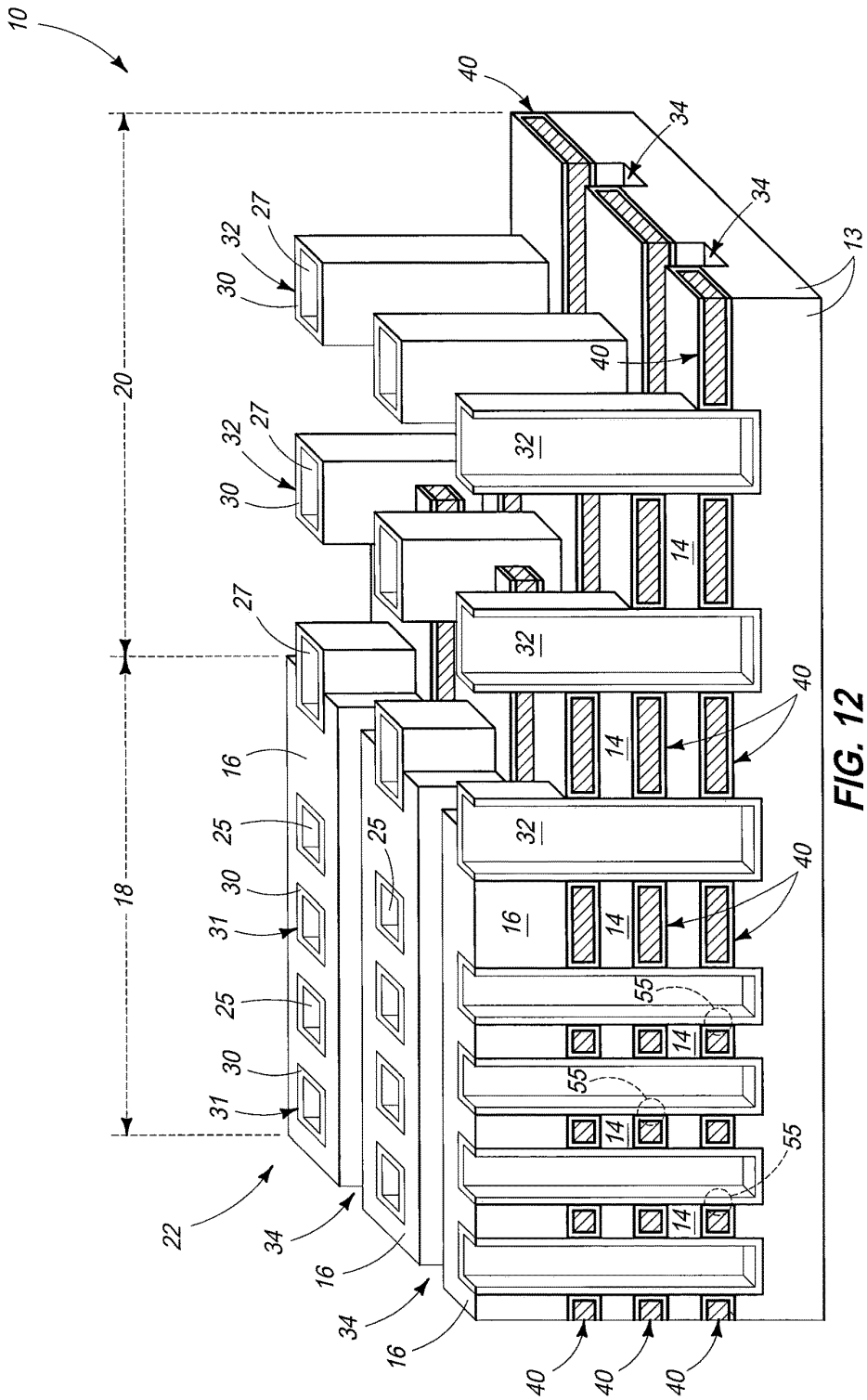

FIG. 12

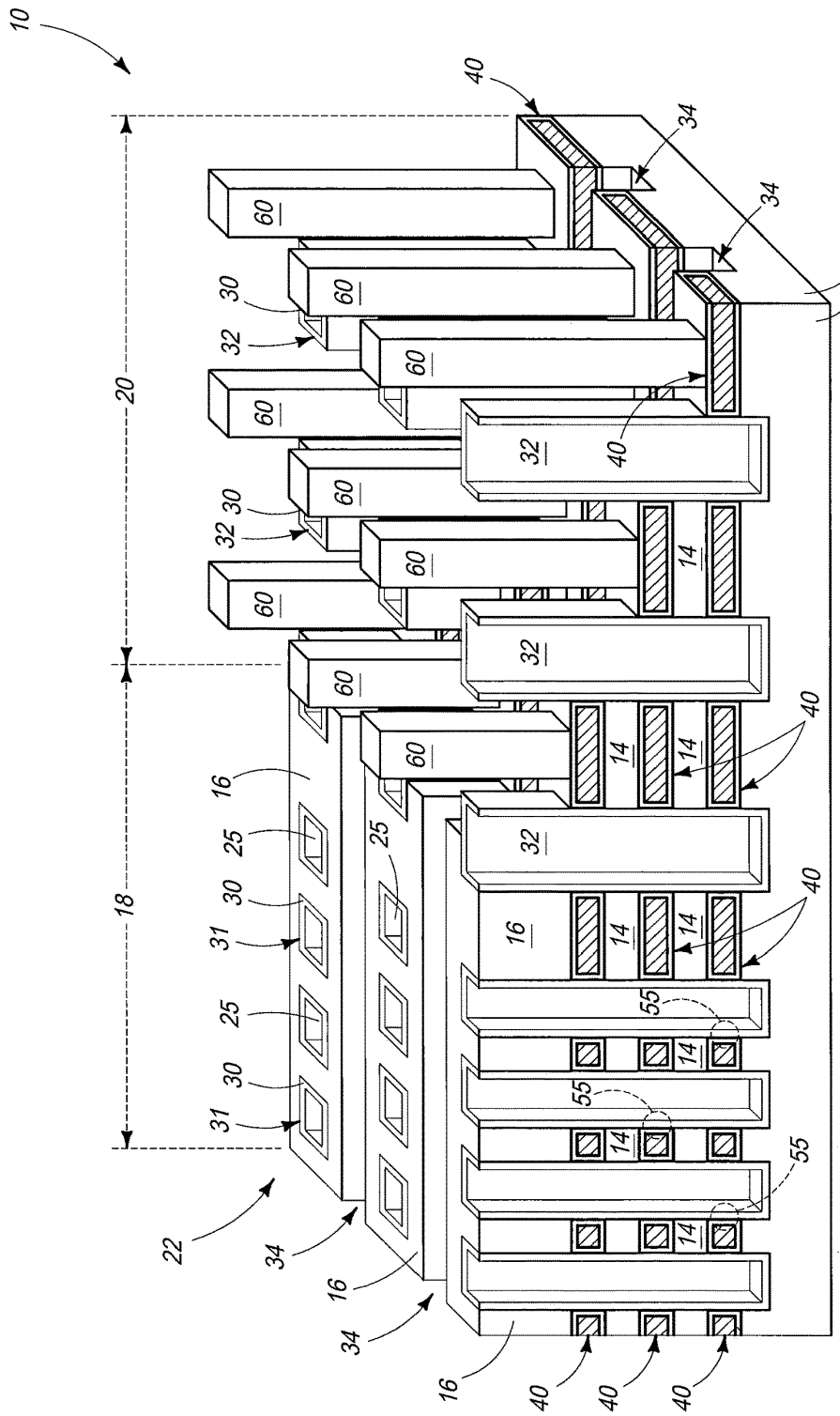

FIG. 13

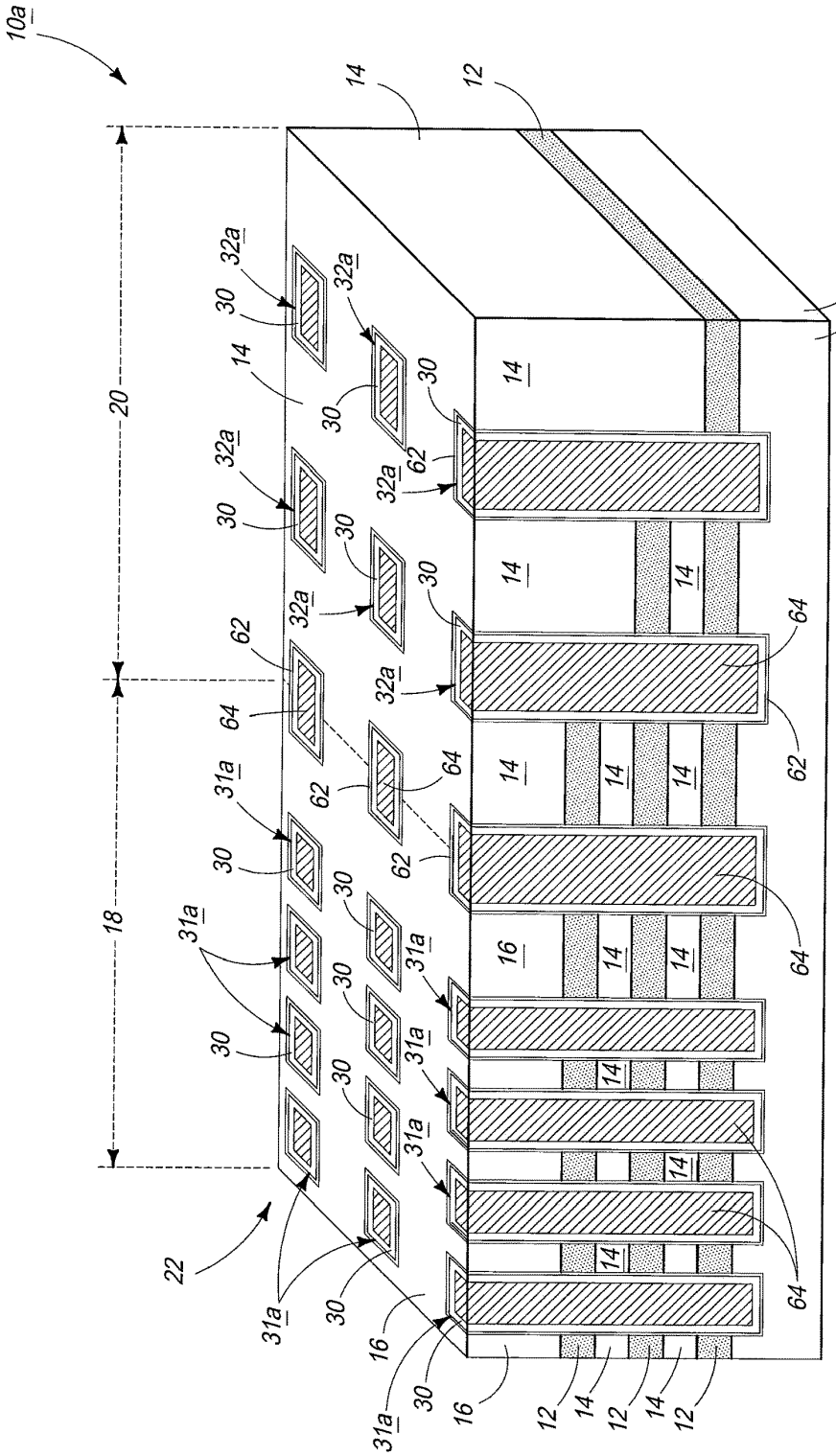

FIG. 14

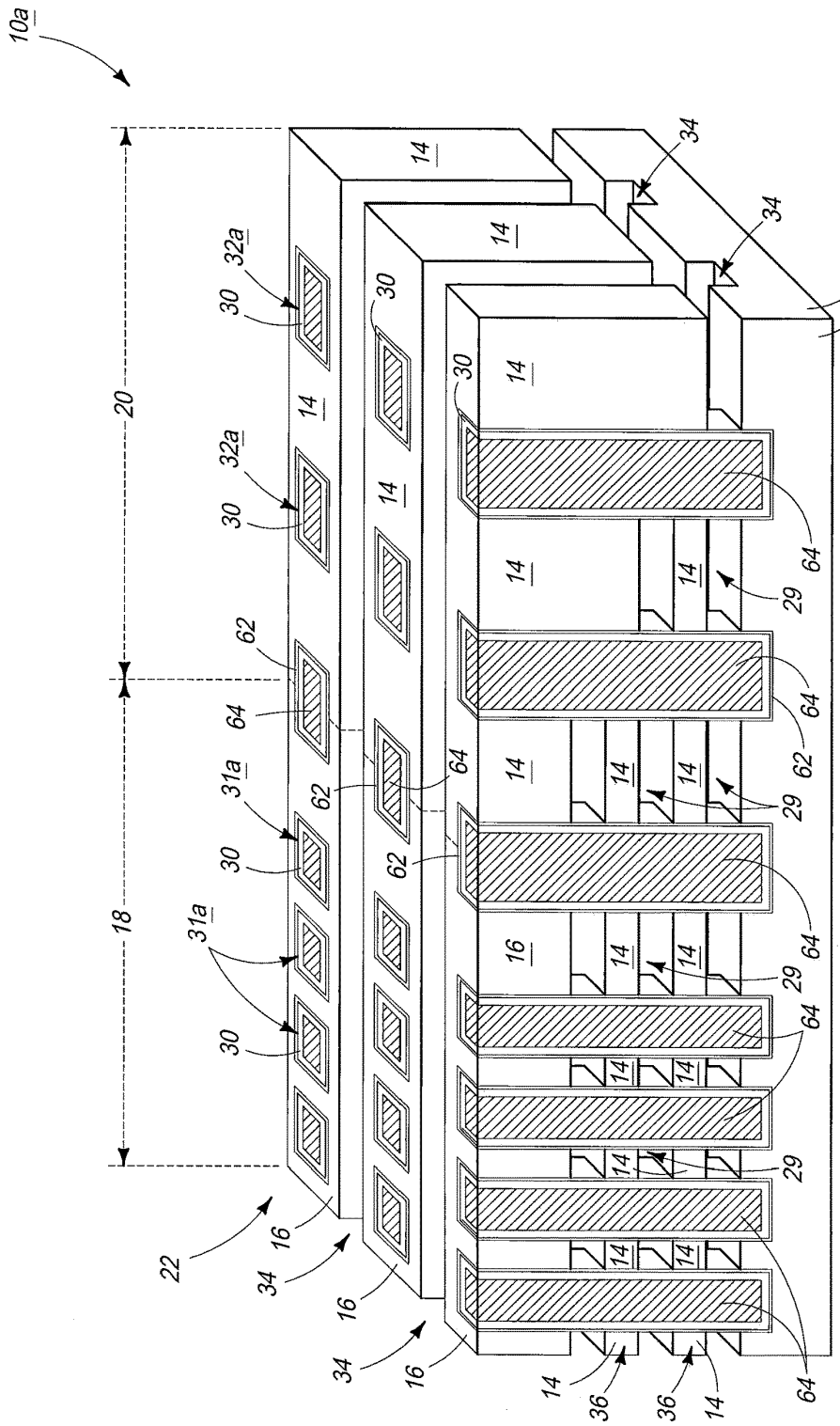

FIG. 15

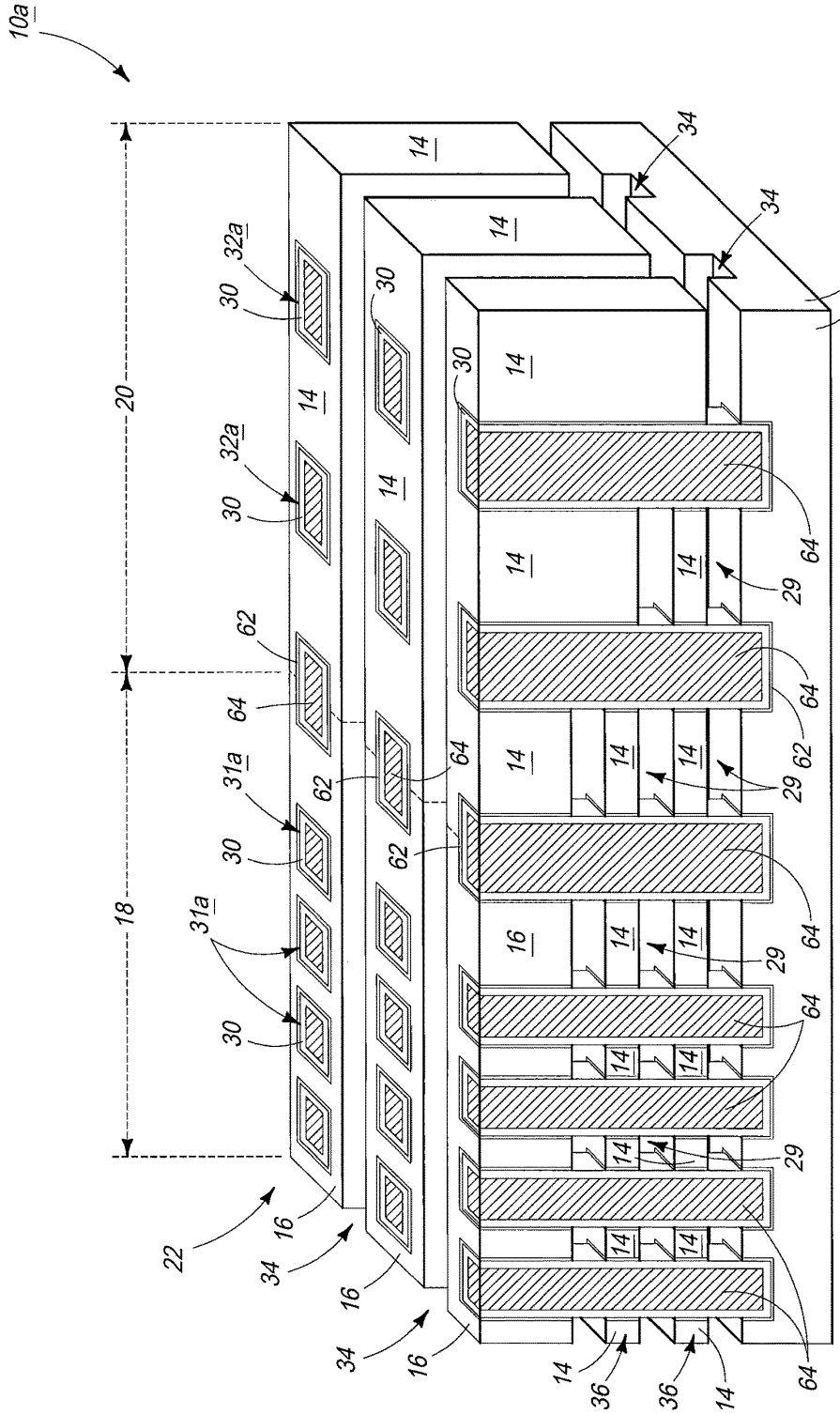

FIG. 16

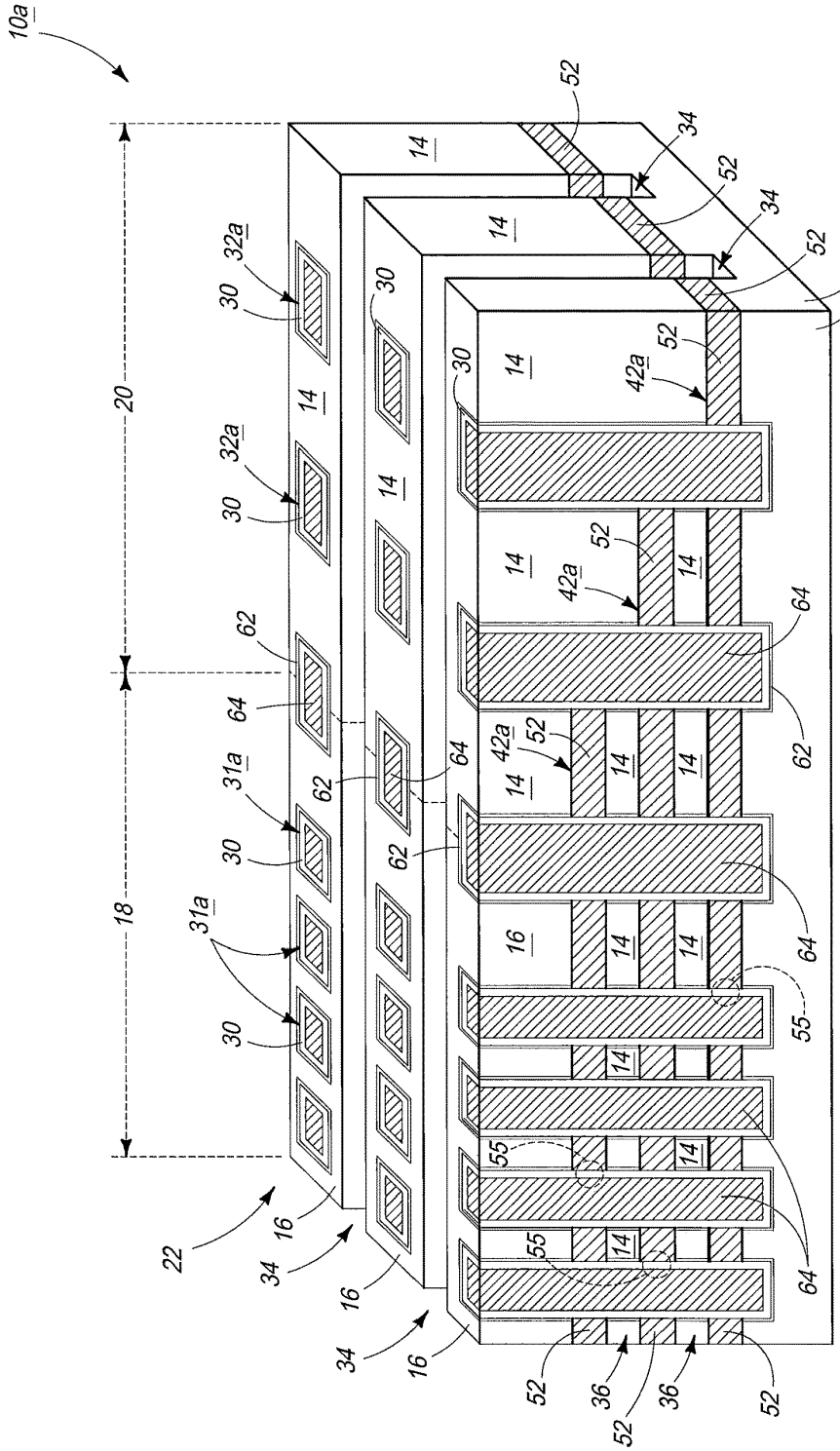

FIG. 17

STACK OF HORIZONTALLY EXTENDING AND VERTICALLY OVERLAPPING FEATURES, METHODS OF FORMING CIRCUITRY COMPONENTS, AND METHODS OF FORMING AN ARRAY OF MEMORY CELLS

RELATED PATENT DATA

This patent resulted from a continuation application of U.S. patent application Ser. No.15/397,919, filed Jan. 4, 2017, entitled "Stack Of Horizontally Extending And Vertically Overlapping Features, Methods Of Forming Circuitry Components, And Methods Of Forming An Array Of Memory Cells", naming Sanh D. Tang, Roger W. Lindsay, and Krishna K. Parat as inventors, which was a continuation application of U.S. patent application Ser. No. 15/095,208, filed Apr. 11, 2016, now US Pat. No. 9,564,471, entitled "Stack Of Horizontally Extending And Vertically Overlapping Features, Methods Of Forming Circuitry Components, And Methods Of Forming An Array Of Memory Cells", naming Sanh D. Tang, Roger W. Lindsay, and Krishna K. Parat as inventors, which is a divisional application of U.S. patent application Ser. No. 14/602,559, filed Jan. 22, 2015, now U.S. Pat. No. 9,318,430, which is a divisional application of U.S. patent application Ser. No. 13/085,083, filed Apr. 12, 2011, now U.S. Pat. No. 8,945,996, entitled "Methods Of Forming Circuitry Components, And Methods Of Forming An Array Of Memory Cells", naming Sanh D. Tang, Roger W. Lindsay, and Krishna K. Parat as inventors, the disclosures of which are incorporated by reference.

TECHNICAL FIELD

Embodiments disclosed herein pertain to stacks of horizontally extending and vertically overlapping features, and to methods of forming circuitry components and to methods of forming an array of memory cells.

BACKGROUND

Integrated circuits are often formed on a semiconductor substrate such as a silicon wafer or other semiconductive material. In general, layers of various materials which are semiconductive, conductive, or electrically insulative are utilized to form the integrated circuits. By way of examples, the various materials may be doped, ion implanted, deposited, etched, grown, etc. using various processes. A continuing goal in semiconductive processing is to strive to reduce the size of individual circuitry components, thereby enabling smaller and denser integrated circuitry.

Memory is one type of integrated circuitry, and is used in computer systems for storing data. Such is usually fabricated in one or more arrays of individual memory cells. The memory cells might be volatile, semi-volatile, or nonvolatile. Nonvolatile memory cells can store data for extended periods of time, in many instances including when the computer is turned off. Volatile memory dissipates and therefore requires being refreshed/rewritten, in many instances multiple times per second. Regardless, the smallest unit in each array is termed as a memory cell and is configured to store data as one of at least two different selectable states. In a binary system, the states are considered as either a "0" or a "1". In other systems, at least some individual memory cells may be configured to store data as one of more than two selectable states.

Integrated circuitry fabrication continues to strive to produce smaller and denser integrated circuits. Accordingly, the fewer components an individual circuit device has, the smaller the construction of the finished device can be. A simple memory cell will be comprised of two conductive electrodes having a programmable material there-between. The programmable material is selected or designed to be configured in a selected one of at least two different physical memory states to enable storing of information by an individual memory cell. The reading of the cell comprises determination of which of the states the programmable material is in, and the writing of information to the cell comprises placing the programmable material in a target memory state. Some programmable materials retain a memory state in the absence of refresh, and thus may be incorporated into nonvolatile memory cells.

Some programmable materials may contain mobile charge carriers larger than electrons and holes, for example ions in some example applications. Regardless, the programmable materials may be converted from one memory state to another by moving the mobile charge carriers to alter a distribution of charge density within the programmable materials. Some example memory devices that utilize ions as mobile charge carriers are resistive RAM (RRAM) cells, which can include classes of memory cells containing multivalent oxides, and which can include memristors in some specific applications. Other example memory devices that utilize ions as charge carriers are programmable metallization cells (PMCs); which may be alternatively referred to as a conductive bridging RAM (CBRAM), nanobridge memory, or electrolyte memory.

The RRAM cells may contain programmable material sandwiched between a pair of electrodes. The programming of the RRAM cells may comprise transitioning the programmable material between first a memory state in which charge density is relatively uniformly dispersed throughout the material and a second memory state in which the charge density is concentrated in a specific region of the material (for instance, a region closer to one electrode than the other).

A PMC may similarly have programmable material sandwiched between a pair of current conductive electrodes. The PMC programmable material comprises ion conductive material, for example a suitable chalcogenide or any of various suitable oxides. A suitable voltage applied across the electrodes generates current conductive super-ionic clusters or filaments. Such result from ion transport through the ion conductive material which grows the clusters/filaments from one of the electrodes (the cathode), through the ion conductive material, and toward the other electrode (the anode). The clusters or filaments create current conductive paths between the electrodes. An opposite voltage applied across the electrodes essentially reverses the process and thus removes the current conductive paths. A PMC thus comprises a high resistance state (corresponding to the state lacking a current conductive filament or clusters between the electrodes) and a low resistance state (corresponding to the state having a current conductive filament or clusters between the electrodes), with such states being reversibly interchangeable with one another.

Another type of nonvolatile memory is known as flash memory, a type of EEPROM (electrically-erasable programmable read-only memory) that may be erased and reprogrammed in groups. A typical flash memory array includes a large number of nonvolatile memory cells usually grouped into blocks. Each of the cells within a block may be electrically programmed by charging its programmable gate material. The charge may be removed from the program-

mable gate material by a block erase operation. NAND is a basic architecture of flash memory. A NAND architecture comprises at least one select gate coupled in series to a serial combination of memory cells (with the serial combination being commonly referred to as a NAND string).

BRIEF DESCRIPTION OF THE DRAWINGS

FIG. **1** is a diagrammatic oblique view of a semiconductor substrate fragment in process in accordance with an embodiment of the invention.

FIG. **2** is a view of the FIG. **1** substrate at a processing step subsequent to that shown by FIG. **1**.

FIG. **3** is a view of the FIG. **2** substrate at a processing step subsequent to that shown by FIG. **2**.

FIG. **4** is a view of the FIG. **3** substrate at a processing step subsequent to that shown by FIG. **3**.

FIG. **5** is a view of the FIG. **4** substrate at a processing step subsequent to that shown by FIG. **4**.

FIG. **6** is an end view of FIG. **5** relative to line **6-6** in FIG. **5**.

FIG. **7** is a view of the FIG. **5** substrate wherein certain material in FIG. **5** is not shown in FIG. **7** solely for clarity.

FIG. **8** is an end view of FIG. **7** relative to line **8-8** in FIG. **7**.

FIG. **9** is a view of the FIG. **7** substrate at a processing step subsequent to that shown by FIG. **7**.

FIG. **10** is a view of the FIG. **9** substrate wherein certain material in FIG. **9** is not shown in FIG. **10** solely for clarity.

FIG. **11** is a view of the FIG. **9** substrate at a processing step subsequent to that shown by FIG. **9**.

FIG. **11**A is an enlarged view of a portion of FIG. **11**.

FIG. **12** is view of the FIG. **11** substrate wherein certain material in FIG. **11** is not shown in FIG. **12** solely for clarity.

FIG. **13** is a view of the FIG. **12** substrate at a processing step subsequent to that shown by FIG. **12**.

FIG. **14** is a diagrammatic perspective view of a semiconductor substrate fragment in process in accordance with an embodiment of the invention.

FIG. **15** is a view of the FIG. **14** substrate at a processing step subsequent to that shown by FIG. **14**.

FIG. **16** is a view of the FIG. **15** substrate at a processing step subsequent to that shown by FIG. **15**.

FIG. **17** is a view of the FIG. **16** substrate at a processing step subsequent to that shown by FIG. **16**.

DETAILED DESCRIPTION OF EXAMPLE EMBODIMENTS

Example embodiments in accordance with the invention of methods of forming circuitry components are initially described with reference to FIGS. **1-10**. In some embodiments, an array of memory cells may be fabricated, for example as described with reference to FIGS. **1-13** and with reference to FIGS. **14-17**. In one embodiment, such may comprise cross-point memory cells (e.g., as shown in FIG. **17**), and in one embodiment may comprise NAND circuitry (e.g., as shown in FIGS. **11**, **11**A, **12**, and **13**).

Referring to FIG. **1**, a substrate fragment **10** comprises a suitable base substrate **13** over which various materials have been provided. Base substrate **13** may be homogenous or non-homogenous, for example comprising multiple different composition materials and/or layers. As examples, such may comprise bulk monocrystalline silicon and/or a semiconductor-on-insulator substrate. As an additional example, such may comprise dielectric material having contacts (e.g., conductive vias) formed therein which extend vertically or otherwise into communicative contact (e.g., current conductive electrical connection) with device components, regions, or material that is elevationally inward of the dielectric material. In this document, vertical is a direction generally orthogonal to a primary surface relative to which the substrate is processed during fabrication and which may be considered to define a generally horizontal direction. Further, "vertical" and "horizontal" as used herein are generally perpendicular directions relative one another independent of orientation of the substrate in three-dimensional space. Further in this document, "elevational" and "elevationally" are with reference to the vertical direction from a base substrate upon which the circuitry is fabricated.

The base substrate may or may not be a semiconductor substrate. In the context of this document, the term "semiconductor substrate" or "semiconductive substrate" is defined to mean any construction comprising semiconductive material, including, but not limited to, bulk semiconductive materials such as a semiconductive wafer (either alone or in assemblies comprising other materials thereon), and semiconductive material layers (either alone or in assemblies comprising other materials). The term "substrate" refers to any supporting structure, including, but not limited to, the semiconductive substrates described above.

In one embodiment, substrate **10** comprises a stack of alternating sacrificial material **12** and dielectric material **14** formed over base substrate **13**. Each material **12** and **14** may be homogenous or non-homogenous. In one embodiment, the respective sacrificial materials **12** are of the same composition relative one another. In one embodiment, the respective dielectric materials **14** are of the same composition relative one another. Regardless, sacrificial material **12** may be selectively etchable, in one embodiment highly selectively etchable, relative to dielectric material **14**. In the context of this document, a "selective" etch requires removal of the stated one material relative to another at a rate of at least 1.5:1, and a highly selective etch at a rate of at least about 10:1. Sacrificial material **12** may be any one or more of conductive (e.g., current conductive), dielectric, or semiconductive. By way of an example only, dielectric material **14** may comprise silicon dioxide (whether doped or undoped), and an example sacrificial material is a conductive or insulative nitride, for example titanium nitride or silicon nitride, respectively. A dielectric material **16** and a hardmask **18** have been provided outwardly of alternating materials **12**, **14**. Each material **16** and **18** may be homogenous or non-homogenous. Dielectric material **16** may be of the same composition as dielectric material **14**, and hardmask material **18** may be of the same composition as sacrificial material **12**. FIG. **1** depicts vertical tiers of three sacrificial materials **12** with two alternating dielectric materials **14**. Additional alternating pairs of sacrificial and dielectric materials may be provided elevationally inward of innermost sacrificial material **12** or elevationally outward of outermost sacrificial material **12**.

Stack of alternating materials **12**, **14** may be considered as comprising a primary portion **18** and an end portion **20**. The end portion in the depicted embodiment has been patterned to form a stair step-like construction. Such may be formed to provide horizontal area for later forming contacts to components, regions, or material in end portion **20** as will be apparent in the continuing discussion. In one embodiment and as shown, end portion **20** comprises individual stairs **21** which at least include sacrificial material **12**.

In one embodiment, materials **12** and **14** may be features (e.g., plates), such as plates or features that are plate-like, whether continuously and/or discontinuously formed. In one

embodiment, a method of forming circuitry components comprises forming a stack of horizontally extending and vertically overlapping plates at least some of which increase in horizontal extent in the vertical inward direction in the end portion of the stack (i.e., at least some of which extend farther in the horizontal direction in the end portion moving deeper into the stack in the end portion). Either of collective materials **12** or **14** may be considered in such example embodiment as comprising such plates, or materials **12** and **14** in combination in the depicted embodiment may be considered as such plates. In one embodiment, the horizontally extending and vertically overlapping plates are dielectric, for example plates **14** regardless of the composition of sacrificial material **12**. In one embodiment, all of the plates increase in horizontal extent in the vertical inward direction in the end portion of the stack. For example in the embodiment of FIG. **1**, either of collective plates **12** or collective plates **14** may be considered as plates all of which increase in horizontal extent progressing vertically inward in the end portion of the stack. Alternately, a composite of each immediately adjacent plate pairs **12**, **14** may be considered as respective plates which increase in horizontal extent in the vertical inward direction in end portion **20** of the stack.

In one embodiment, primary portion **18** and end portion **20** comprise a portion of an array area **22** within which a plurality of memory cells will be fabricated. Logic circuitry (not shown) may be fabricated outside of the array area. Control and/or other peripheral circuitry (not shown) for operating the memory array may or may not fully or partially be within the array area, with an example array area as a minimum encompassing all of the memory cells of the given array/sub-array. Further, multiple sub-arrays might also be fabricated and operated independently, in tandem, or otherwise relative one another. As used in this document, a "sub-array" may also be considered as an array.

Referring to FIG. **2**, dielectric material has been formed over substrate **10** and planarized at least to the outermost surface of hardmask **18**. The dielectric material may be homogenous or non-homogenous and, in one embodiment, may be of the same composition as that of material **14** and is so shown and designated in the figures.

Referring to FIG. **3**, first openings **25** have been formed into primary portion **18** of the stack and second openings **27** have been formed into end portion **20** of the stack. Any openings which overlap the primary and end portions may be such first or second openings (i.e., as primary portion openings or end portion openings), with example such openings being shown in FIG. **3** and designated as second openings **27**. Openings **25**, **27** may be formed through each plate **12**, **14**. An example technique for forming openings **25**, **27** is by photolithographic patterning followed by subtractive anisotropic etching. First openings **25** need not be of the same shape and/or density relative one another. Second openings **27** need not be of the same shape and/or density relative one another, or relative to any one or more of first openings **25**. As examples, openings **25** and **27** may be formed to have the same horizontal and vertical cross sections (not shown). Alternately, openings **25** and **27** may be formed to have at least one of different horizontal cross sections (as shown) or different vertical cross sections (as shown). Further and regardless, openings **25** and **27** may be formed at the same time or at different times, and/or may use the same masking step or different masking steps where, for example, photolithographic or other masking is used. In one embodiment and as shown, at least some of openings **27** in end portion **20** are formed to horizontally overlap ends of individual plates **12** and/or **14**.

At least one of conductive material, semiconductive material, and programmable material is/are deposited into the openings. In one embodiment where conductive material is deposited into the openings, such may comprise current conductive material. In the context of this document, current conductive material can include a composition where electric current flow may inherently occur therein predominantly by movement of subatomic positive and/or negative charges when such are generated as opposed to predominantly by movement of ions. Example current conductive materials are elemental metals, alloys of elemental metals, current conductive metal compounds, and conductively doped semiconductive material, including any combinations thereof.

In one embodiment, the depositing of the conductive material, semiconductive material and/or programmable material occurs simultaneously into all of the openings in the primary portion. In one embodiment, the depositing of such material occurs simultaneously into all of the openings in the end portion. In one embodiment, the depositing of such material occurs simultaneously into all of the openings in both of the primary and end portions. Operative structures (e.g., circuit components, such as local vertical extensions) are formed therewith within the openings in the primary portion, and dummy structures (e.g. dummy vertical extensions) are formed therewith within the openings in the end portion. In the context of this document, a "dummy" structure is a structure which is used to mimic a physical property of another structure (e.g., load carrying ability of an operative structure) and which may comprise a circuit inoperable electrical dead end (e.g., is not part of a current flow path of a circuit even if conductive). Openings in which dummy structures are formed may be considered as "dummy openings".

For example referring to FIG. **4**, a material **30** has been deposited within openings **25**, **27**, and then planarized back through hardmask material **18** (not shown). An example thickness for material **30** is from about 100 to about 150 Angstroms. Material **30** may be homogenous or non-homogenous, and may comprise one or more of conductive material (e.g., current conductive material), semiconductive material, and programmable material. In one embodiment, material **30** comprises semiconductive material. Further in such embodiment, the semiconductive material may comprise interconnected channels of a plurality of vertically oriented transistors, and in one embodiment comprises interconnected channels of vertically oriented charge storage transistors as will be apparent from the continuing discussion. Regardless, in one embodiment, material **30** may form operative structures **31** (e.g., operative circuit components **31**) within primary portion openings **25** and form dummy structures **32** (e.g., dummy circuit components) within end portion openings **27**. In one embodiment and as shown, such operative structures **31** and dummy structures **32** are in the form of hollow cylinders. Alternately by way of example, such may be in the form of laterally solid pillars (not shown in FIG. **4**). Regardless, the above processing describes but examples of forming operative structures **31** vertically through plates **12** and/or **14** in primary portion **18** and forming dummy structures **32** vertically through plates **12** and/or **14** in end portion **20**. In one embodiment, the operative and dummy structures may comprise the same material (as shown). In one embodiment, the operative and dummy structures may comprise a plurality of the same materials (not shown in FIG. **4**), and in one such embodiment be arranged in the same lateral order relative one another in the operative and dummy structures. In one

embodiment, the operative and dummy structures may consist essentially of the same material.

Referring to FIGS. **5-8**, horizontally elongated openings **34** (e.g., trenches) have been formed through plates **12** and/or **14**, and laterally between material **30**, to form horizontally elongated and vertically overlapping lines **36** from material of the plates. Lines **36** individually extend from primary portion **18** into end portion **20** and individually laterally about sides of vertically extending portions of both operative structures **31** and dummy structures **32**. FIGS. **7** and **8** are views of FIGS. **5** and **6**, respectively, wherein dielectric material **14** added in FIG. **2** is removed solely for clarity in such drawings. Where either of operative structures **31** or dummy structures **32** are upwardly open (e.g., as shown), such may be partially or wholly filled (not shown) with dielectric and/or other material prior to the forming of horizontally elongated openings **34**.

Referring to FIGS. **9** and **10**, at least some of sacrificial material **12** that is elevationally between lines **36** within primary portion **18** and end portion **20** has been removed from being laterally between horizontally elongated openings **34**. Such thereby, in one embodiment, forms void spaces **29** elevationally between vertically spaced horizontal dielectric lines **36**. An example technique includes etching, for example isotropic dry and/or wet etching. Etching may be conducted selectively (ideally, highly selectively) relative to lines **36**, operative structures **31**, and dummy structures **32**. FIG. **10** is a view of the FIG. **9** substrate wherein dielectric material **14** added in FIG. **2** is removed solely for clarity in such drawing.

The above processing discloses but example embodiments of forming circuitry components in accordance with some aspects of the invention. In one embodiment, a method of forming circuitry components comprises forming a stack of horizontally extending and vertically overlapping features. By way of example only, such features may comprise plates, with the example depicted structure of plates **14** comprising but one example of such plates. Regardless, in such embodiment, the stack comprises a primary portion and an end portion wherein at least some of the features increase in horizontal extent in the vertical inward direction in the end portion of the stack (i.e., at least some of which extend farther in the horizontal direction in the end portion moving deeper into the stack in the end portion). Operative structures **31** (e.g., circuit components) are formed vertically through the features in the primary portion and dummy structures **32** (e.g., dummy circuit components) are formed vertically through the features in the end portion. The processing depicted through FIG. **4**, or through FIGS. **5-8**, are examples. The operative and dummy structures may comprise the same material, and in one embodiment may consist essentially of the same material. The dummy structures may support material of the features from vertical movement in the end portion while at least some of sacrificial material that is elevationally between the material of the features in the primary and end portions is removed. The processing depicted in going from that of FIGS. **5-8** to that of FIGS. **9** and **10** is but one such example processing. With respect to a prior art problem, dummy structures heretofore have not been provided in a stair-like end portion of an array. Accordingly, the floors/ceilings that are vertically between the respective void spaces **29** in FIGS. **9** and **10** may be sagged, bent, or broken during processing due to lack of support. In accordance with one embodiment of the invention, dummy structures in the end portion support the features (e.g., the respective ceilings and floors, or plates) from vertical movement, for example by laterally engaging side portions of such floors/ceilings that were created where such dummy structures extend there-through. Regardless, other attributes as described may be employed.

Additional processing may occur in fabricating integrated circuitry, for example in fabricating an array of memory cells as next described with reference to FIGS. **11-13**. Referring to FIGS. **11** and **11**A, material **40** has been isotropically deposited within horizontally elongated openings **34**, former void spaces **29** (not shown in FIGS. **11**, **11**A), and any remaining volume of openings **25**, **27**. Material **40** has subsequently been removed from horizontally elongated openings **34** to form vertically spaced horizontal conductive lines **42** within the void spaces elevationally between horizontal lines **36** of dielectric material **14**. In one embodiment, conductive lines **42** collectively cross a row of the operative and dummy structures at different respective elevations. In one embodiment, individual structures **31**, **32** cross different conductive lines at different respective elevations. In the depicted example, conductive lines **42** extend longitudinally straight linear. Alternately by way of example, some or all of lines **42** may not be straight linear, for example being longitudinally curvilinear (not shown). Material **40** may also be removed from the remaining internal volume of openings **25**, **27** as shown. FIG. **12** depicts the circuitry of FIG. **11** wherein the dielectric material that is shown as being deposited in FIG. **2** is removed solely for clarity.

FIGS. **11**, **11**A, and **12** depict but one example embodiment comprising NAND circuitry wherein operative structures **31** comprise interconnected channel regions of a NAND string. In such example embodiment, material **40** comprises a composite of a suitable tunnel dielectric **49** (FIG. **11**A), floating gate/charge trapping material **48**, dielectric **50**, and conductive control gate material **52**. Thereby, conductive material **52** provides but an example conductive portion of conductive lines **42** that is within the void spaces between the horizontal lines of dielectric material, and which collectively cross a row of the operative and dummy structures at different respective elevations. Individual ones of the memory cells of the example circuitry of FIGS. **11** and **11**A comprise an intersection of an individual horizontal conductive line and an individual operative structure (e.g., in the form of a string of channels of NAND), and some of which are indicated with reference numeral **55**.

In one embodiment, a respective contact may be formed to a stair extension of individual ones of horizontal conductive lines **42** in end portion **20** for making communicative connection to circuitry. One such example is diagrammatically shown in FIG. **13**. The dielectric material **14** of FIG. **2** is again showed removed solely for clarity in depicting certain components. Specifically, FIG. **13** shows example individual contacts **60** (e.g, current conductive contacts) which may be formed through the dielectric material **14** (not shown) of FIG. **2** for making communicative connection to circuitry, such as that elevationally outward of that depicted by FIG. **13** with respect to each conductive line **42**.

Circuitry components other than or in addition to components of memory cells may be fabricated in accordance with embodiments of the invention.

An example embodiment of a method of forming an array of cross-point memory cells is next described with reference to FIGS. **14-17**. Like numerals from the above-described embodiments have been used where appropriate, with some construction differences being indicated with the suffix "a" or with different numerals. FIG. **14** depicts an alternate embodiment substrate fragment **10***a* to that depicted by FIG. **4**. In FIG. **14**, openings **25**, **27** have been lined with a first

material **62**. In one embodiment, such material is dielectric (i.e., a 15 to 30 Angstroms thick layer of undoped silicon dioxide). Thereafter, a programmable material **30** was deposited to line over first material **62** within openings **25**, **27**. Then, remaining volume of openings **25**, **27** has been filled with conductive material **64**, and materials **62**, **30**, and **64** planarized back to materials **14** and **16**. Horizontally elongated openings (not shown in FIG. **14**) may then be formed analogous to the processing depicted by FIGS. **5-8**.

Programmable material **30** may be solid, gel, amorphous, crystalline, or any other suitable phase. Any existing or yet-to-be developed programmable material may be used, with only some examples being provided below.

One example programmable material is ion conductive material. Example suitable such materials comprise chalcogenide-type (for instance, materials comprising one or more of germanium, selenium, antimony, tellurium, sulfur, copper, etc.; with example chalcogenide-type materials being $Ge_2Sb_2Te_5$, GeS_2, $GeSe_2$, CuS_2, and CuTe) and/or oxides such as zirconium oxide, hafnium oxide, tungsten oxide, copper oxide, niobium oxide, iron oxide, silicon oxide (specifically, silicon dioxide), gadolinium oxide, etc. capable of inherently (or with additive) supporting electrolyte behavior. Such may have silver, copper, cobalt, and/or nickel ions, and/or other suitable ions, diffused therein for ionic conduction, analogously to structures disclosed in U.S. Pat. No. 7,405,967 and U.S. Patent Publication Number 2010/0193758.

Additional example programmable materials include multi-resistive state metal oxide-comprising material. Such may comprise, for example, at least two different layers or regions generally regarded as or understood to be active or passive regions, although not necessarily. Alternately, such may only comprise active material. Example active cell region compositions which comprise metal oxide and can be configured in multi-resistive states include one or a combination of $Sr_xRu_yO_z$, Ru_xO_y, and $In_xSn_yO_z$. Other examples include MgO, Ta_2O_5, $SrTiO_3$, $SrZrO_3$, $BaTiO_3$, $Ba_{(1-x)}Sr_xTiO_3$, ZrO_x (perhaps doped with La), and $CaMnO_3$ (doped with one or more of Pr, La, Sr, or Sm). Example passive cell region compositions include one or a combination of Al_2O_3, TiO_2, and HfO_2. Regardless, a programmable material composite might comprise additional metal oxide or other materials not comprising metal oxide. Example materials and constructions for a multi-resistive state region comprising one or more layers including a programmable metal oxide-comprising material are described and disclosed in U.S. Pat. Nos. 6,753,561; 7,149,108; 7,067,862; and 7,187,201, as well as in U.S. Patent Application Publication Nos. 2006/0171200 and 2007/0173019. Further as is conventional, multi-resistive state metal oxide-comprising materials encompass filament-type metal oxides, ferroelectric metal oxides and others, and whether existing or yet-to-be developed, as long as resistance of the metal oxide-comprising material can be selectively changed.

The programmable material may comprise memristive material. As an example, such material may be statically programmable semiconductive material which comprises mobile dopants that are received within a dielectric such that the material is statically programmable between at least two different resistance states. At least one of the states includes localization or gathering of the mobile dopants such that a dielectric region is formed and thereby provides a higher resistance state. Further, more than two programmable resistance states may be used. In the context of this document, a "mobile dopant" is a component (other than a free electron) of the semiconductive material that is movable to different locations within said dielectric during normal device operation of repeatedly programming the device between at least two different static states by application of voltage differential to the pair of electrodes. Examples include atom vacancies in an otherwise stoichiometric material, and atom interstitials. Specific example mobile dopants include oxygen atom vacancies in amorphous or crystalline oxides or other oxygen-containing material, nitrogen atom vacancies in amorphous or crystalline nitrides or other nitrogen-containing material, fluorine atom vacancies in amorphous or crystalline fluorides or other fluorine-containing material, and interstitial metal atoms in amorphous or crystalline oxides. More than one type of mobile dopant may be used. Example dielectrics in which the mobile dopants are received include suitable oxides, nitrides, and/or fluorides that are capable of localized electrical conductivity based upon sufficiently high quantity and concentration of the mobile dopants. The dielectric within which the mobile dopants are received may or may not be homogenous independent of consideration of the mobile dopants. Specific example dielectrics include TiO_2, AlN, and/or MgF_2. Example programmable materials that comprise oxygen vacancies as mobile dopants may comprise a combination of TiO_2 and TiO_{2-x} in at least one programmed resistance state depending on location of the oxygen vacancies and the quantity of the oxygen vacancies in the locations where such are received. An example programmable material that comprises nitrogen vacancies as mobile dopants is a combination of AlN and AlN_{1-x} in at least one programmed state depending on location of the nitrogen vacancies and the quantity of the nitrogen vacancies in the locations where such are received. An example programmable material that comprises fluorine vacancies as mobile dopants may is a combination of MgF_2 and MgF_{2-x} in at least one programmed resistance state depending on location of the fluorine vacancies and the quantity of the fluorine vacancies in the locations where such are received. As another example, the mobile dopants may comprise aluminum atom interstitials in a nitrogen-containing material.

Still other example programmable materials include polymer materials such as Bengala Rose, AlQ_3Ag, Cu-TCNQ, DDQ, TAPA, and fluorescine-based polymers.

Referring to FIG. **15**, such corresponds in processing sequence to that of FIG. **9** of the above-described embodiments. Sacrificial material **12** (not shown) has been at least partially removed (e.g., by etching) between dielectric lines **36** in primary portion **18** and end portion **20** laterally between horizontally elongated openings **34**. Material **12** may be etched selectively (ideally, highly selectively) relative to dielectric lines **36**, first material lining **62**, and conductive material **64** in openings **25**, **27**. FIGS. **14** and **15** depict an example embodiment wherein the operative and dummy structures comprise a plurality of the same materials, and in such embodiment arranged in the same lateral order relative one another in the operative and dummy structures. Regardless, in one embodiment, first material lining **62** may serve as a protecting barrier from adverse exposure of programmable material **30** to the etching chemistry which etches the sacrificial material.

Referring to FIG. **16**, at least a portion of first material **62** has been removed elevationally between dielectric lines **36** to expose laterally outer sidewalls of programmable material **30** that is elevationally between dielectric lines **36**. An example technique for doing so where material **62** comprises silicon dioxide includes etching with a dilute HF solution.

Referring to FIG. **17**, at least a portion of sacrificial material **12** (not shown) of FIG. **14** has been replaced with

conductor material **52** (e.g., current conductive material) that is in electrical connection with the laterally outer sidewalls of programmable material **30** and to comprise vertically spaced horizontal conductive lines **42***a*. Materials **64** and **52** may be of the same composition or of different compositions. Further and regardless, conductive material **64** within remaining volumes of openings **25**, **27** alternately may be provided subsequent to the etching depicted by FIG. **15**. Regardless, FIG. **17** also depicts conductor material **52** as having been at least partially removed from horizontally elongated openings **34** to form such vertically spaced horizontal conductive lines **42***a*.

Individual ones of the cross-point memory cells comprise crossing ones of the horizontal conductive lines in the primary portion and conductive material in the openings in the primary portion having the programmable material there-between, with some of such example memory cells being indicated with reference numeral **55** in the FIG. **17** example embodiment.

An embodiment of the invention includes a stack of horizontally extending and vertically overlapping features. The stack comprises a primary portion and an end portion. At least some of the features extend farther in the horizontal direction in the end portion moving deeper into the stack in the end portion. Operative structures extend vertically through the features in the primary portion. Dummy structures extend vertically through the features in the end portion. In one embodiment, the features may be horizontally extending lines, for example formed of any one or combination of conductive (e.g., current conductive), semiconductive, and/or dielectric material(s). In one embodiment, the features comprise a combination of horizontally extending conductive and dielectric lines (e.g., overlapping and alternating such lines). In one embodiment, contacts may be in the end portion, for example extending vertically to the lines. Any other attribute as described above may be used, for example as shown and described with respect to FIGS. **1-13** and with respect to FIGS. **14-17**.

In compliance with the statute, the subject matter disclosed herein has been described in language more or less specific as to structural and methodical features. It is to be understood, however, that the claims are not limited to the specific features shown and described, since the means herein disclosed comprise example embodiments. The claims are thus to be afforded full scope as literally worded, and to be appropriately interpreted in accordance with the doctrine of equivalents.

The invention claimed is:

1. Integrated circuitry comprising a stack of horizontally extending and vertically overlapping conductive transistor gate lines, the integrated circuitry comprising:

a primary portion and an end portion, at least some of the gate lines extending farther in the horizontal direction in the end portion moving deeper into the stack in the end portion;

operative structures extending vertically through the gate lines in the primary portion, the operative structures comprising semiconductive material, the semiconductive material of the operative structures comprising interconnected channels of a plurality of vertically oriented transistors that individually comprise individual of the gate lines; and

dummy structures extending vertically through the gate lines in the end portion.

2. The stack of claim **1** further comprising contacts in the end portion that individual extend to the individual gate lines.

3. The integrated circuitry of claim **1** wherein the vertically oriented transistors are charge storage transistors of individual memory cells.

4. The integrated circuitry of claim **3** wherein the memory cells comprise a portion of NAND architecture.

5. The integrated circuitry of claim **1** wherein the operative and dummy structures comprise the same material.

6. The integrated circuitry of claim **5** wherein the operative and dummy structures comprise a plurality of the same materials.

7. The integrated circuitry of claim **6** wherein the same materials are arranged in the same lateral order relative one another in the operative and dummy structures.

8. The integrated circuitry of claim **5** wherein the operative and dummy structures consist essentially of the same material.

9. The integrated circuitry of claim **1** wherein the dummy structures comprise semiconductor material.

10. The integrated circuitry of claim **1** wherein the dummy structures comprise the semiconductive material.

11. A stack of horizontally extending and vertically overlapping features, the stack comprising:

a primary portion and an end portion, at least some of the features extending farther in the horizontal direction in the end portion moving deeper into the stack in the end portion;

operative structures extending vertically through the features in the primary portion; and

dummy structures extending vertically through the features in the end portion, the dummy structures individually comprising a cylinder of semiconductive material.

12. The stack of claim **11** comprising solid material filling radially internal regions of individual of the cylinders of semiconductive material.

13. The stack of claim **11** wherein individual of the cylinders of semiconductive material define a radially-outermost horizontal periphery of individual of the dummy structures.

14. The stack of claim **11** wherein the operative structures individually comprise a cylinder of semiconductor material.

15. The stack of claim **11** further comprising vertical contacts in the end portion connecting with conductive material of individual of the features.

16. A stack of horizontally extending and vertically overlapping features, the stack comprising:

a primary portion and an end portion, at least some of the features extending farther in the horizontal direction in the end portion moving deeper into the stack in the end portion;

operative structures extending vertically through the features in the primary portion, the operative structures comprising portions of memory cells, the memory cells comprising a portion of NAND architecture, the operative structures comprising interconnected channel regions of a NAND string; and

dummy structures extending vertically through the features in the end portion, some of the dummy structures horizontally overlapping the primary portion and the end portion.

17. The stack of claim **16** wherein the dummy structures comprise a cylinder of semiconductive material.

18. A stack of horizontally extending and vertically overlapping features, the stack comprising:

a primary portion and an end portion, at least some of the features extending farther in the horizontal direction in the end portion moving deeper into the stack in the end portion;

operative structures extending vertically through the features in the primary portion, the operative structures comprising portions of memory cells, the memory cells comprising a portion of NAND architecture, the operative structures comprising interconnected channel regions of a NAND string, at least some of the features comprising control gate lines;

dummy structures extending vertically through the control gate lines in the end portion; and

vertical contacts in the end portion connecting with individual of the control gate lines, the contacts and dummy structures having different horizontal cross-sections relative one another.

19. The stack of claim **18** wherein the different horizontal cross-sections are of the same shape and of different sizes relative one another.

20. The stack of claim **18** wherein the different horizontal cross-sections have different values of total horizontal area relative one another.

21. A stack of horizontally extending and vertically overlapping features, the stack comprising:

a primary portion and an end portion, at least some of the features extending farther in the horizontal direction in the end portion moving deeper into the stack in the end portion;

operative structures extending vertically through the features in the primary portion, the operative structures comprising portions of memory cells, the memory cells comprising a portion of NAND architecture, the operative structures comprising interconnected channel regions of a NAND string, the at least some of the features comprising control gate lines;

dummy structures extending vertically through the control gate lines in the end portion, some of the dummy structures being longitudinally spaced alone a horizontal line; and

vertical contacts in the end portion connecting with individual of the control gate lines, at least one of the vertical contacts being longitudinally between two immediately-longitudinally adjacent of the dummy structures in the horizontal line.

22. The stack of claim **21** wherein the horizontal line is linearly straight.

* * * * *