Draft ETSI TS 183 063 V3.4.2(2010-09)

Technical Specification

Telecommunications and Internet converged Services and Protocols for Advanced Networking (TISPAN); IMS-based IPTV stage 3 specification

Koninklijke KPN NV - Exhibit 2010
Samsung Electronics America, Inc. et al. v. Koninklijke KPN NV PTAB-IPR2025-00502

Reference
RTS/TISPAN-03204-NGN-R3

Keywords
IMS, IP, TV, stage 3

ETSI

650 Route des Lucioles
F-06921 Sophia Antipolis Cedex - FRANCE

Tel.: +33 4 92 94 42 00 Fax: +33 4 93 65 47 16

Siret N° 348 623 562 00017 - NAF 742 C
Association à but non lucratif enregistrée à la
Sous-Préfecture de Grasse (06) N° 7803/88

Important notice

Individual copies of the present document can be downloaded from:
http://www.etsi.org

The present document may be made available in more than one electronic version or in print. In any case of existing or perceived difference in contents between such versions, the reference version is the Portable Document Format (PDF). In case of dispute, the reference shall be the printing on ETSI printers of the PDF version kept on a specific network drive within ETSI Secretariat.

Users of the present document should be aware that the document may be subject to revision or change of status. Information on the current status of this and other ETSI documents is available at
http://portal.etsi.org/tb/status/status.asp

If you find errors in the present document, please send your comment to one of the following services:
http://portal.etsi.org/chaircor/ETSI_support.asp

Copyright Notification

No part may be reproduced except as authorized by written permission.
The copyright and the foregoing restriction extend to reproduction in all media.

© European Telecommunications Standards Institute 2009.
All rights reserved.

DECT™, **PLUGTESTS**™, **UMTS**™, **TIPHON**™, the TIPHON logo and the ETSI logo are Trade Marks of ETSI registered for the benefit of its Members.
3GPP™ is a Trade Mark of ETSI registered for the benefit of its Members and of the 3GPP Organizational Partners.
LTE™ is a Trade Mark of ETSI currently being registered
for the benefit of its Members and of the 3GPP Organizational Partners.
GSM® and the GSM logo are Trade Marks registered and owned by the GSM Association.

Contents

Intellectual Property Rights 15
Foreword 15
1 Scope 16
2 References 16
2.1 Normative references 16
2.2 Informative references 19
3 Abbreviations 20
4 Applicability 21
4.1 Overview 21
4.2 Functional entities 24
4.2.1 User Equipment (UE) 24
4.2.2 Service Control Function (SCF) 24
4.2.3 Service Discovery Function (SDF) 24
4.2.4 Service Selection Function (SSF) 24
4.2.5 Media Control Function (MCF) 24
4.2.6 Media Delivery Function (MDF) 24
4.2.7 Core-IMS 24
4.2.8 Inter-destination media synchronization entities 25
4.2.8.1 MSAS 26
4.2.8.2 SC 26
4.2.8.3 SC' 26
4.2.9 Service Protection and Content Protection function (SCP) 26
4.3 Compliance 26
5 Procedures using SIP/SDP for IMS-based IPTV 28
5.1 User Equipment (UE) 28
5.1.1 Procedure for IMS registration 28
5.1.2 Procedure for service attachment 28
5.1.2.1 Push mode 29
5.1.2.2 Pull mode 29
5.1.2.2.1 Subscription 29
5.1.2.2.2 Receiving notifications 30
5.1.3 Procedure for BC service 30
5.1.3.1 UE-initiated session initiation 30
5.1.3.1.1 Additional SDP lines for FEC streams 31
5.1.3.1A SCF-initiated session initiation 32
5.1.3.2 Session modification 33
5.1.3.3 BC service with trick-play mode 33
5.1.3.3.1 Trick-play mode activation 33
5.1.3.3.2 Trick-play mode deactivation 33
5.1.3.4 Session termination 34
5.1.3.5 Session Information 34
5.1.3.6 Procedure for PPV service 35
5.1.4 Procedure for CoD service 35
5.1.4.1 Procedure for retrieving missing parameters before session initiation 35
5.1.4.2 UE-initiated session initiation 36
5.1.4.2.1 Procedure for establishing the RTSP content control and content delivery channel 36
5.1.4.2.2 Procedure for establishing the RTSP channel separately 37
5.1.4.2A SCF-initiated session initiation 38
5.1.4.2.3 Additional SDP lines for FEC streams 38
5.1.4.3 Session modification 39
5.1.4.3.1 Procedure for establishing the content delivery channel 39
5.1.4.3.2 Additional SDP lines for FEC streams 39
5.1.4.4 Session termination 40

Koninklijke KPN NV - Exhibit 2010
Samsung Electronics America, Inc. et al. v. Koninklijke KPN NV PTAB-IPR2025-00502
Page 3 of 237

5.1.4.4.1 Session termination using RTSP Method 1 ... 40
5.1.4.4.2 Session termination using RTSP Method 2 ... 40
5.1.4.5 Procedures for handling COD Service action data ... 40
5.1.5 Procedure for Service Configuration ... 41
5.1.5.1 Subscription to notification of changes ... 41
5.1.5.2 Processing of notifications ... 42
5.1.6 Procedure for IPTV presence service ... 42
5.1.6.1 Subscribing to presence ... 44
5.1.6.2 Receiving presence notifications ... 45
5.1.7 Procedure for PVR Service ... 45
5.1.7.1 Procedures for PVR Service Capture Request ... 45
5.1.7.1.1 Procedures for Impulsive Request ... 45
5.1.7.1.2 Procedures for Offline Request ... 46
5.1.7.2 Procedures for N-PVR Session ... 47
5.1.7.3 Procedures for C-PVR Recording Session ... 48
5.1.8 Procedure for UGC Service ... 48
5.1.8.1 Procedure for UGC declaration ... 48
5.1.8.2 Procedure for publishing UGC description information by UE ... 48
5.1.8.3 Procedure for UGC creation ... 49
5.1.8.3.1 Session initiation ... 49
5.1.8.4 Procedure for UGC watching session ... 50
5.1.8.4.1 UGC selection ... 50
5.1.8.4.2 Session initiation ... 50
5.1.9 Notification service ... 50
5.1.9.1 Procedure for Notification service using signalling path ... 50
5.1.10 Procedure for Remote Service Initiation ... 50
5.1.10.1 Procedure for service initiation by remote UE ... 50
5.1.10.2 Procedure for service initiation on the Target UE ... 51
5.1.11 Procedure for Personalised Service Composition ... 51
5.1.11.1 General ... 51
5.1.11.2 Generation of the PSCid by the UE ... 52
5.1.11.3 UE-initiated session initiation ... 52
5.1.11.4 SCF-initiated session initiation ... 52
5.1.11.5 Session modification ... 52
5.1.11.6 Session termination ... 52
5.1.12 Procedure for Personalized Channel (PCh) Service ... 52
5.1.12.1 Procedure for PCh Declaration ... 52
5.1.12.2 Procedure for PCh Operation ... 53
5.1.12.2.1 PCh Session Initiation ... 53
5.1.12.2.2 Session modification due to a PCh Content Item Switch ... 53
5.1.12.2.3 PCh Overlap Handling through User interaction ... 53
5.1.13 Procedure for Content Insertion at UE Side ... 54
5.1.14 Procedures for IPTV Content Marker Service ... 55
5.1.14.1 Procedure for IPTV Content Marker handling ... 55
5.1.15 Procedure for Targeted Ad Insertion (TAI) ... 56
5.1.15.1 TAI at UE side ... 56
5.1.15.2 TAI at MF side ... 56
5.1.16 Procedures for Content Switch within a CoD Contentlist(User-Owned) ... 57
5.1.16.1 57
UE-initiated session Session initiation ... 57
5.1.17 Procedures with other IMS Services ... 57
5.1.17.1 Instant Messaging Procedures ... 57
5.1.18 Procedures for Unicast Content Download ... 57
5.1.18.1 UE-initiated Content download session initiation for unicast download ... 57
5.1.18.2 UE-initiated Content download session initiation for multicast download ... 59
5.1.19 Procedure for Preview Service ... 59
5.1.19.1 Procedures for BC preview session ... 59
5.1.19.1.1 Session initiation ... 59
5.1.19.2 Procedures for CoD preview session ... 59
5.1.19.2.1 Session initiation ... 59
5.1.20 Procedure for Session Transfer ... 59
5.1.20.1 Generic Procedure ... 59

Koninklijke KPN NV - Exhibit 2010
Samsung Electronics America, Inc. et al. v. Koninklijke KPN NV PTAB-IPR2025-00502
Page 4 of 237

5.1.20.1.1 Transferee UE session initiation ... 59
5.1.20.2 Session Transfer – Push Mode ... 60
5.1.20.2.1 Transferor UE Locating a Transferee ... 60
5.1.20.2.2 Transferor UE Initiation of Session Transfer Request ... 60
5.1.20.2.3 Transferee UE Handling for Incoming Session Transfer Request ... 60
5.2 Service Discovery Function (SDF) ... 61
5.2.1 Procedure for IMS registration ... 61
5.2.2 Procedure for service attachment ... 61
5.2.2.1 Push mode ... 61
5.2.2.2 Pull mode ... 62
5.2.2.3 Service Attachment Information ... 64
5.3 Service Control Function (SCF) ... 66
5.3.1 Procedure for BC service ... 66
5.3.1.1 UE-initiated session initiation ... 66
5.3.1.1A SCF-initiated session initiation ... 67
5.3.1.2 Session modification ... 67
5.3.1.3 BC service with trick-play mode ... 67
5.3.1.3.1 Trick-play mode activation ... 68
5.3.1.3.2 Trick-play mode deactivation ... 68
5.3.1.4 Session termination ... 68
5.3.1.5 Procedure for PPV service ... 69
5.3.1.5.1 PPV Session initiation ... 69
5.3.1.5.2 PPV Session termination ... 69
5.3.2 Procedure for CoD service ... 69
5.3.2.1 Procedure for handling missing parameters before session initiation ... 69
5.3.2.2 UE-initiated session initiation ... 69
5.3.2.2A SCF-initiated session initiation ... 70
5.3.2.3 Session modification ... 70
5.3.2.4 Session termination ... 70
5.3.2.4.1 Session termination using RTSP method 1 ... 70
5.3.2.4.2 Session termination using RTSP method 2 ... 70
5.3.2.5 Procedures for handling COD Service action data ... 70
5.3.3 Procedure for Service Configuration ... 71
5.3.4 Procedure for PVR Service ... 71
5.3.4.1 Procedures for PVR Service Capture Request ... 71
5.3.4.1.1 Procedures for Impulsive Request ... 71
5.3.4.1.2 Procedures for Offline Request ... 72
5.3.4.2 Procedures for N-PVR Session ... 72
5.3.4.3 Procedures for C-PVR Service Recording Session ... 72
5.3.5 Procedure for UGC Service ... 73
5.3.5.1 Procedure for handling UGC declaration request ... 73
5.3.5.2 Procedure for handling publication request of UGC description information ... 73
5.3.5.3 Procedure for handling UGC creation request ... 74
5.3.5.4 Procedure for handling UGC watching request ... 74
5.3.5.4.1 UGC pre-selection ... 74
5.3.6 Notification service ... 74
5.3.6.1 Procedure for Notification service using signalling path ... 74
5.3.6.2 Procedure for Notification service using multicast media path ... 75
5.3.7 Procedure for restricted trick play ... 76
5.3.8 Procedure for Service Initiation for Remote UE ... 76
5.3.8.1 Procedure for handling the request of remote UE initial procedures ... 76
5.3.9 Procedures for Playlist handling ... 76
5.3.9.1 Network-Owned Playlist procedures for during CoD session initiation ... 77
5.3.9.2 Playlist procedures during an existing CoD session ... 77
5.3.10 Procedure for Personalised Service Composition ... 78
5.3.10.1 UE-initiated session initiation ... 78
5.3.10.2 SCF-initiated session initiation ... 78
5.3.10.3 Session modification ... 78
5.3.10.4 Session termination ... 78
5.3.11 Procedure for Personalized Channel (PCh) Service ... 78
5.3.11.1 Procedure for PCh Declaration Request Handling ... 78
5.3.11.2 Procedure for PCh Operation ... 79

Koninklijke KPN NV - Exhibit 2010
Samsung Electronics America, Inc. et al. v. Koninklijke KPN NV PTAB-IPR2025-00502
Page 5 of 237

5.3.11.2.1 PCh Session Initiation ... 79
5.3.11.2.2 PCh Content Item Switch ... 79
5.3.11.2.3 PCh Overlap Handling ... 80
5.3.12 Procedure for Content Insertion ... 81
5.3.12.1 Content Insertion at UE Side ... 81
5.3.12.2 Content Insertion at MF Side ... 82
5.3.13 Procedures for IPTV Content Marker Service ... 82
5.3.13.1 Procedure for IPTV Content Marker handling ... 82
5.3.14 Procedure for Targeted Ad Insertion (TAI) ... 83
5.3.14.1 TAI at UE side ... 83
5.3.14.2 TAI at MF side ... 83
5.3.15 Procedures for Content Switch within a CoD Contentlist ... 83
5.3.15.1 83
UE-initiated session Session initiation ... 83
5.3.16 Procedures with other IMS Services ... 84
5.3.16.1 Instant Messaging Procedures ... 84
5.3.17 Procedures for Unicast Content Download ... 84
5.3.17.1 UE-initiated Content Download session initiation ... 84
5.3.18 Procedure for Preview Service ... 84
5.3.18.1 Procedures for BC preview session ... 84
5.3.18.1.1 Session initiation ... 84
5.3.18.2 Procedures for CoD preview session ... 84
5.3.18.2.1 Session initiation ... 85
5.3.19 Procedure for Session Transfer ... 85
5.3. 19.1 Generic Procedure ... 85
5.3. 19.1.1 Transferee UE session initiation ... 85
5.3. 19.2 Session Transfer – Push Mode ... 85
5.3. 19.2.1 Transferor UE Locating a Transferee ... 85
5.3. 19.2.2 Transferor and Transferee Handling of Session Transfer Request ... 85
5.4 Media Control Function (MCF) ... 86
5.4.1 Procedure for CoD service ... 86
5.4.1.1 Procedure for providing missing parameters before session initiation ... 86
5.4.1.2 Session initiation ... 86
5.4.1.2.1 Procedure for establishing the RTSP content control and content delivery channel ... 86
5.4.1.2.2 Procedure for establishing the RTSP channel separately ... 87
5.4.1.3 Session modification ... 88
5.4.1.3.1 Procedure for establishing the content delivery channel ... 88
5.4.1.4 Session termination ... 89
5.4.1.4.1 Session termination using RTSP method 1 ... 89
5.4.1.4.2 Session termination using RTSP method 2 ... 89
5.4.1.5 Procedures for handling COD Service action data ... 89
5.4.2 Procedure for support of BC service with trick play ... 90
5.4.3 Procedure for N-PVR Session ... 90
5.4.4 Procedure for UGC Service ... 90
5.4.4.1 Procedure for handling UGC creating Session ... 90
5.4.4.1.1 MCF as SDP answerer ... 91
5.4.5 Notification service ... 91
5.4.5.1 Procedure for Notification service using multicast media path ... 91
5.4.6 Procedure for restricted trick play ... 92
5.4.7 Procedures for Playlist handling ... 92
5.4.7.1 Procedures for updating playlist information ... 92
5.4.7.2 Procedures for Content Switching according to playlist information ... 92
5.4.8 Procedure for Personalized Channel (PCh) Service ... 92
5.4.8.1 Procedure for PCh Operation ... 92
5.4.8.1.1 PCh Session Initiation ... 92
5.4.8.2.2 PCh Content Item Switch ... 92
5.4.9 Procedure for Targeted Ad Insertion (TAI) ... 93
5.4.9.1 Procedure for Internal TAI option ... 93
5.4.9.1.1 TAI at UE side ... 93
5.4.9.1.2 TAI at MF side ... 93
5.4.10 Procedures for inter-destination media synchronization ... 93
5.4.10.1 Synchronization session initiation ... 93

Koninklijke KPN NV - Exhibit 2010
Samsung Electronics America, Inc. et al. v. Koninklijke KPN NV PTAB-IPR2025-00502
Page 6 of 237

5.4.10.2 Synchronization session modification ... 93
5.4.10.3 Synchronization session termination ... 93
5.4.11 Procedures for Content Switch within a CoD Contentlist ... 94
5.4.11.1 94
UE-initiated Session Initiation ... 94
5.4.12 Procedure for Content Insertion at MF Side ... 94
5.4.13 Procedure for Unicast Content Download ... 94
5.4.13.1 Procedure for handling UE-initiated Content Download session ... 94
5.4.13.1.1 MCF as SDP answerer ... 95
5.4.14 Procedure for Preview Service ... 95
5.4.14.1 Procedures for CoD preview session ... 95
5.5 Core IMS ... 95
5.5.1 Procedure for Registration ... 96
5.5.2 Procedure for Service Attachment ... 96
5.5.2.1 Push mode ... 96
5.5.2.2 Pull mode ... 96
5.5.3 Procedure for Service Configuration ... 96
5.5.4 Procedure for Service Selection ... 96
5.5.5 Procedure for CoD service ... 97
5.5.6 Procedure for BC service ... 97
5.6 Common Procedures ... 97
5.6.1 IMS Communication Service Identifier ... 97
5.6.2 Session Control Procedures ... 98
5.6.3 UE SIP Instance Identifier ... 98
5.6.4 UE Support for GRUU ... 99
5.7 Synchronization Client (SC) ... 99
5.7.1 Procedures for inter-destination media synchronization ... 99
5.7.1.1 Synchronization session initiation ... 99
5.7.1.2 Synchronization session termination ... 100
5.8 Media Synchronization Application Server (MSAS) ... 100
5.8.1 Procedures for inter-destination media synchronization ... 100
5.8.1.1 Synchronization session initiation ... 100
5.8.1.2 Synchronization session termination ... 100

6 Procedures using HTTP for IMS-based IPTV ... 101
6.1 User Equipment (UE) ... 101
6.1.1 Procedures for service selection ... 101
6.1.1.1 Procedure for service personalization ... 101
6.1.1.2 Request of DVB SD&S ... 101
6.1.1.3 Request of DVB BCG ... 101
6.1.1.3.1 Container-based request ... 101
6.1.1.3.2 Query mechanism ... 101
6.1.1.4 Request of OMA BCAST ESG ... 101
6.1.1.5 Request of service action data ... 101
6.1.1.5A Request of TV-Anytime Phase 2 XML ... 102
6.1.1.6 Use of service selection information ... 102
6.1.1.7 Query for IPTV Content Marker ... 103
6.1.2 Procedure for service configuration ... 103
6.1.2.1 General ... 103
6.1.2.2 Subscription for notification of state changes in XML document ... 103
6.1.3 Procedures for Unicast Content Download ... 103
6.1.3.1 Request of Content Download ... 103
6.2 Service Control Function (SCF) ... 104
6.2.1 Procedure for service configuration ... 104
6.2.1.1 General ... 104
6.2.1.2 Manipulation acceptance ... 104
6.2.1.3 Authentication and authorization ... 104
6.2.1.4 Subscription acceptance and notification of state changes in XML document ... 105
6.3 Service Selection Function (SSF) ... 105
6.3.1 Procedure for service selection ... 105
6.3.1.1 Authentication and authorization for personalized service selection information ... 105
6.3.1.2 Procedure for service personalization ... 105

Koninklijke KPN NV - Exhibit 2010
Samsung Electronics America, Inc. et al. v. Koninklijke KPN NV PTAB-IPR2025-00502
Page 7 of 237

6.3.1.3 Delivery of DVB SD&S ... 106
6.3.1.4 Delivery of DVB BCG ... 106
6.3.1.4.1 Container-based delivery ... 106
6.3.1.4.2 Query response ... 107
6.3.1.5 Delivery of OMA BCAST ESG ... 107
6.3.1.6 Delivery of Service Action Data ... 107
6.3.1.7 Delivery of IPTV Content Marker ... 108
6.3.1.8 Delivery of TV-Anytime Phase 2 XML ... 108
6.4 Stand-Alone XMDS ... 108
6.4.1 Procedure for service configuration ... 108
6.4.1.1 General ... 108
6.4.1.2 Manipulation acceptance ... 108
6.4.1.3 Authentication and authorization ... 108
6.4.1.4 Subscription acceptance and notification of state changes in XML document ... 109
6.5 Media Function (MF) ... 109
6.5.1 Procedures for Unicast Content Download ... 109
6. 5.1.1 Response of Content Download ... 109

7 Procedures using RTSP for IMS-based IPTV ... 109
7.1 User Equipment (UE) ... 109
7.1.1 Procedures for RTSP playback control (Method 1) ... 109
7.1.1.1 Introduction ... 109
7.1.1.2 Media playback initiation procedure ... 110
7.1.1.3 Media playback modification procedure ... 110
7.1.1.4 Media playback information retrieval and setting procedure ... 110
7.1.1.5 Handling of media events ... 111
7.1.2 Procedure for content control (Method 2) ... 111
7.1.2.1 Introduction ... 111
7.1.2.2 Media description procedure ... 111
7.1.2.3 Media setup procedure ... 112
7.1.2.4 Media playback initiation procedure ... 112
7.1.2.5 Media playback modification procedure ... 112
7.1.2.6 Media teardown procedure ... 113
7.1.2.7 Handling of media events ... 113
7.1.3 Procedures for Content Switch within a CoD Contentlist ... 113
7.2 Media Control Function (MCF) ... 113
7.2.1 Procedures for RTSP playback control (Method 1) ... 113
7.2.1.1 Introduction ... 113
7.2.1.2 Media Playback Initiation Procedure ... 114
7.2.1.3 Media playback modification procedure ... 114
7.2.1.4 Media playback information retrieval and setting procedure ... 114
7.2.1.5 Handling of media events ... 114
7.2.2 Procedure for content control (Method 2) ... 115
7.2.2.1 Introduction ... 115
7.2.2.2 Media description procedure ... 115
7.2.2.3 Media setup procedure ... 115
7.2.2.4 Media playback initiationcontrol procedure ... 116
7.2.2.5 Media playback modification procedure ... 116
7.2.2.6 Media teardown procedure ... 116
7.2.2.7 Handling of media events ... 116
7.2.3 Procedures for restricted trick play ... 117
7.2.4 Procedures for inter-destination media synchronization ... 117
7.2.5 Procedures for Content Switch within a CoD Contentlist ... 117
7.2.6 Procedure for PlayBack following Session Transfer ... 117
7.2.7 Playlist handling when end of stream is reached ... 117
7.2.8 Procedures for trick play during playlist ... 117
7.3 Synchronization Client (SC) ... 118
7.3.1 Procedures for inter-destination media synchronization ... 118

8 Procedures using IGMP/MLD for IMS-based IPTV ... 118
8.1 User Equipment (UE) ... 118
8.1.1 Procedure for service selection ... 118

Koninklijke KPN NV - Exhibit 2010
Samsung Electronics America, Inc. et al. v. Koninklijke KPN NV PTAB-IPR2025-00502
Page 8 of 237

8.1.1.1 Procedure to start receiving service selection information ... 118
8.1.1.2 Procedure to stop receiving service selection information ... 119
8.1.2 Procedure for BC service ... 119
8.1.2.1 Procedure for joining a BC service ... 119
8.1.2.2 Procedure for leaving BC service ... 120
8.1.3 Procedure for Notification service using multicast media path ... 121
8.2 Transport Functions ... 121
8.2.1 Receiving IGMP/MLD request corresponding to a join operation ... 121
8.2.2 Receiving IGMP/MLD request corresponding to a leave operation ... 122

9 Procedures using DVBSTP for IMS-based IPTV ... 122
9.1 User Equipment (UE) ... 122
9.1.1 Procedure for service selection ... 122
9.1.1.1 Request of DVB service discovery and selection data ... 122
9.1.1.2 Request of DVB broadband content guide ... 122
9.1.1.3 Use of service selection information ... 122
9.2 Service Selection Function (SSF) ... 122
9.2.1 Procedure for service selection ... 122
9.2.1.1 Delivery of DVB service discovery and selection data ... 122
9.2.1.2 Delivery of DVB broadband content guide ... 122

10 Procedures using FLUTE for IMS-based IPTV ... 122
10.1 User Equipment (UE) ... 123
10.1.1 Procedure for service selection ... 123
10.1.1.1 Request of OMA BCAST service discovery and selection data ... 123
10.1.1.2 Request of OMA BCAST service guide ... 123
10.1.1.3 Use of service selection information ... 123
10.1.2 Procedure for multicast download ... 123
10.1.2.1 Request for multicast download ... 123
10.2 Service Selection Function (SSF) ... 123
10.2.1 Procedure for service selection ... 123
10.2.1.1 Delivery of OMA BCAST service discovery and selection data ... 123
10.2.1.2 Delivery of OMA BCAST service guide ... 123
10.3 Media Delivery Function (MDF) ... 123
10.3.1 Procedure for multicast download ... 123

11 Procedures using UDP/RTP/RTCP for IMS-based IPTV ... 124
11.1 User Equipment (UE) ... 124
11.1.1 Procedure for real-time transport ... 124
11.1.1.1 Transport using MPEG2TS ... 124
11.1.1.2 Transport using direct RTP encapsulation ... 124
11.1.2 Procedure for real-time transport eError correction ... 125
11.1.2.1 Unidirectional transport error correction ... 125
11.2 Media Delivery Function (MDF) ... 125
11.2.1 Procedure for real-time transport ... 125
11.2.1.1 Transport using MPEG2TS ... 125
11.2.1.2 Transport using direct RTP encapsulation ... 125
11.2.2 Procedure for real-time transport error correction ... 125
11.2.2.1 Unidirectional transport error correction ... 125
11.2.3 Procedures for inter-destination media synchronization ... 125
11.3 Synchronization Client (SC) ... 126
11.3.1 Procedure for real-time transport ... 126
11.3.1.1 Transport using MPEG2TS ... 126
11.3.1.2 Transport using direct RTP encapsulation ... 126
11.3.2 Procedures for inter-destination media synchronization ... 126
11.4 Media Synchronization Application Server (MSAS) ... 127
11.4.1 Procedures for inter-destination media synchronization ... 127
11.5 ECF/EFF ... 128
11.5.1 Procedures for inter-destination media synchronization ... 128
11.6 Synchronization Client' (SC') ... 128
11.6.1 Procedure for real-time transport ... 128
11.6.2 Procedures for inter-destination media synchronization ... 128

Koninklijke KPN NV - Exhibit 2010
Samsung Electronics America, Inc. et al. v. Koninklijke KPN NV PTAB-IPR2025-00502
Page 9 of 237

12 IPTV user profile schema 129
13 IPTV service action data schema 129
Annex A (informative): Functional entity relations and example signalling flows of IMS based IPTV operations 130
A.0 Example signalling flows for IPTV services 130
A.1 Functional entities relations and overview of the IMS based IPTV procedures 130
A.2 Example signalling flows of service discovery operation 131
A.2.1 Push mode 131
A.2.2 Pull Mode 132
A.3 Example signalling flows of CoD operation 133
A.3.1 UE-initiated session initiation 133
A.3.1.1 Session initiation flows for case of establishing content control channel and content delivery channels separately using RTSP method 2 133
A.3.1.2 Session initiation flows for case of establishing content control channel and content delivery channels using RTSP method 2 136
A.3.1A SCF-initiated session initiation 137
A.3.2 Session termination 139
A.3.3 Session modification 140
A.3.3.1 Session modification initiated by MF 140
A.4 Example signalling flows of BC operation 141
A.4.1 UE-initiated session initiation 141
A.4.1A SCF-initiated session initiation 142
A.4.2 Session termination 143
A.4.3 Channel switching 143
A.4.3.1 Join after leave 144
A.4.3.2 Leave and Join at the same time 144
A.5 Example signalling flows for inter-destination media synchronization 145
A.5.1 Inter-destination media synchronization flows for SIP signalling 145
A.5.1.0 General 145
A.5.1.1 Inter-destination media synchronization of a BC service 145
A.5.1.2 Inter-destination media synchronization of a CoD service using RTSP method 1 145
A.5.1.3 Inter-destination media synchronization of a CoD service using RTSP method 2 146
A.5.2 Inter-destination media synchronization flows for RTCP signalling 147
A.5.2.0 General 147
A.5.2.1 Inter-destination media synchronization of BC service 148
A.5.2.2 Inter-destination media synchronization of CoD service 148
A.5.2.3 RTCP exchange between UEs directly 149
A.5.2.4 RTCP exchange for sync' 150
A.6 Example signalling flows of content insertion 152
A.6.1 Content insertion at the UE 152
A.6.2 Content insertion at the UE during pause 152
A.7 Example signalling flows for session transfer 153
Annex B (normative): IPTV services XCAP application usage 154
B.1 General 154
B.2 XCAP application usage 154
Annex C (normative): XML Schema for the IPTV profile 156
Annex D (normative): XML Schema for IPTV commands 161
Annex E (normative): XML schema for IPTV presence document extension 163
Annex F (informative): Example of presence information update after channel-change 166

Koninklijke KPN NV - Exhibit 2010
Samsung Electronics America, Inc. et al. v. Koninklijke KPN NV PTAB-IPR2025-00502
Page 10 of 237

Annex G (informative): Example of presence document extension 168

Annex H (informative): Summary of standards and protocols for IMS based IPTV 169

H.1 SIP/SDP protocol 169
H.1.1 Protocol specifications used for SIP/SDP 170

H.2 HTTP protocol 172

H.3 RTSP/SDP protocol....172
H.3.1 Protocol specifications used for RTSP/SDP 172

H.4 UDP/RTP/RTCP protocol 173

H.5 IGMP/MLD protocol....173

H.6 Diameter protocol....174

H.7 DVBSTP protocol 174

H.8 FLUTE protocol 174

Annex I (normative): Procedures for discovery of SDFs prior to service attachment 175

I.1 Manual configuration based manual discovery....175

I.2 DHCP-based discovery 175
I.2.1 Using DHCP option 43/60 175
I.2.2 Using DHCP option 124/125 175
I.2.3 Format of DHCP payload 176

I.3 DNS Service Records (SRV) - based discovery 176

I.4 TR-069 based discovery....177

Annex J (informative): Integration of non SIP AS service discovery function....178

J.1 Integration of non SIP AS service discovery Function based on DVB IPTV....178
J.1.1 User Equipment (UE) 178
J.1.1.1 Procedure for service attachment 178
J.1.1.2 Procedure for service selection.... 178
J.1.1.2.1 Request of DVB SD&S 178
J.1.1.2.2 Request of DVB BCG 178
J.1.2 Service Discovery Function (SDF) 178
J.1.2.1 Procedure for service attachment 178
J.1.3 Service Selection Function (SSF) 178
J.1.3.1 Procedure for service selection.... 178
J.1.3.1.1 Delivery of DVB SD&S 178
J.1.3.1.2 Delivery of DVB BCG 179

J.2 Integration of non SIP AS service discovery function based on OMA BCAST ESG 179
J.2.1 User Equipment (UE) 179
J.2.1.1 Procedure for service attachment 179
J.2.1.2 Procedure for service selection.... 179
J.2.1.2.1 Request of ESG provider discovery information.... 179
J.2.1.2.2 Request of OMA BCAST ESG 179
J.2.2 Service Discovery Function (SDF) 179
J.2.2.1 Procedure for service attachment 179
J.2.3 Service Selection Function (SSF) 180
J.2.3.1 Procedure for service selection.... 180
J.2.3.1.1 Delivery of ESG provider discovery information.... 180
J.2.3.1.2 Delivery of OMA BCAST ESG 180

Annex K (normative): XML Schemas for the IPTV service action data....181

Annex L (normative): Mapping of IPTV parameters to service selection 187

L.1 Mapping of service attachment 187

Koninklijke KPN NV - Exhibit 2010
Samsung Electronics America, Inc. et al. v. Koninklijke KPN NV PTAB-IPR2025-00502
Page 11 of 237

L.1.1 Mapping of DVB SD&S SP discovery records to XML Schema for Service Attachment 187
L.1.2 Mapping of OMA BCAST ESG delivery descriptors to XML schema for service attachment 188
L.1.3 Mapping of service action data record discovery records to XML schema for service attachment 189

L.2 Mapping of BC service 190
L.2.1 Mapping of BC service for DVB technology 190
L.2.2 Mapping of BC service for OMA BCAST technology 192
L.2.2A Mapping of BC service for TV-Anytime Phase 2 technology 193
L.2.3 Use of the TV URI in the mapping of BC service for DVB technology and OMA BCAST technology 193
L.2.3.1 DVB technology 193
L.2.3.2 OMA BCAST technology ..... 194~~193~~
L.2.3.3 TV-Anytime Phase 2 technology 194

L.3 Mapping of CoD service 194
L.3.1 Mapping of CoD service for DVB technology 194
L.3.2 Mapping of CoD service for OMA BCAST technology 195
L.3.3 Mapping of CoD service for TV-Anytime Phase 2 technology 195

L.4 Mapping of IPTV Content Marker retrieval records to XML Schema for Service Attachment 195

L.5 Mapping of Download service for DVB technology 196

Annex M (normative): XML Schema for Service Attachment Information 198

Annex N (normative): Service Package SDP Attribute 201

Annex O (normative): Procedure for definition of new SSF technologies 202

Annex P (normative): XML Schema for UE Profile 203

Annex Q (informative): Combination of SIP and RTSP protocols for content on demand 206

Q.1 User Equipment (UE) side RTSP method decision logic 206

Q.2 Media Control Function (MCF) side RTSP method decision logic 207

Annex R (informative): Initial Filter Criteria 208

Annex S (normative): XML Schema for IPTV Notification 209

Annex T (normative): XML Schema for Restricted Trick Play 210

Annex U (normative): XML Schema for PCh Conflict Option & Choice data 212

Annex V (normative): XML Schema for IPTV Content Marker 213

Annex W (normative): Inter-destination media synchronization 214
W.1 RTCP XR Block Type for inter-destination media synchronization 214
W.2 SDP parameter for inter-destination media synchronization 216
W.3 Introduction to inter-destination media synchronization (informative) 216

Annex X (normative): XML Schema for Content Switch 217

Annex Y (normative): Support for an Application profile for SIP User Agents 217
Y.1 Introduction 218
Y.2 Motivation 218
Y.3 Overview 218
Y.3.1 Profile Type Definition 218
Y.3.2 Parameter 'appids' 219
Y.3.3 Summary of Event Header 219
Y.3.4 SUBSCRIBE Bodies 221
Y.3.5 NOTIFY Bodies 221
Y.4 Example Usage 221
Y.5 IANA Considerations 222
Y.6 Security Considerations 222

Koninklijke KPN NV - Exhibit 2010
Samsung Electronics America, Inc. et al. v. Koninklijke KPN NV PTAB-IPR2025-00502
Page 12 of 237

Annex Z (normative): SDP attributes for IMS-based IPTV 222
Z.1 SDP attributes for Personalized Service Composition 222
Z.1.1 SDP attribute for PSC identifier 222
Z.2 SDP attributes for BC 223
Z.2.1 SDP attributes for BC Service 223
Z.2.2 SDP attributes for BC Service Package 223
Z.2.3 SDP attributes for BC Program 223

Annex ZA (normative): Definition of Info Packages 224
ZA.1 Playlist Info Package 224
ZA.1.1 Overall General 224
ZA.1.2 Overall Description 224
ZA.1.3 Applicability 224
ZA.1.4 Info Package Name 224
ZA.1.5 Info Package Parameters 224
ZA.1.6 SIP Option Tags 224
ZA.1.7 INFO Message Body Parts 225
ZA.1.7.1 General 225
ZA.1.7.2 SIP Content-Type header field value 225
ZA.1.7.3 SIP Content-Disposition header field value 225
ZA.1.7.4 Message body syntax 225
ZA.1.8 Info Package Usage Restrictions 225
ZA.1.9 Rate of INFO Requests 225
ZA.1.10 Info Package Security Considerations 225
ZA.1.11 Implementation Details and Examples 225
ZA.2 Restricted-Trickplay-Policies Info Package 225
ZA.2.1 Overall General 225
ZA.2.2 Overall Description 226
ZA.2.3 Applicability 226
ZA.2.4 Info Package Name 226
ZA.2.5 Info Package Parameters 226
ZA.2.6 SIP Option Tags 226
ZA.2.7 INFO Message Body Parts 226
ZA.1.7.1 General 226
ZA.2.7.2 SIP Content-Type header field value 226
ZA.2.7.3 SIP Content-Disposition header field value 226
ZA.2.7.4 Message body syntax 227
ZA.2.8 Info Package Usage Restrictions 227
ZA.2.9 Rate of INFO Requests 227
ZA.2.10 Info Package Security Considerations 227
ZA.2.11 Implementation Details and Examples 227
ZA.3 IPTV-Content-Marker Info Package 227
ZA.3.1 Overall General 227
ZA.3.2 Overall Description 227
ZA.3.3 Applicability 227
ZA.3.4 Info Package Name 228
ZA.3.5 Info Package Parameters 228
ZA.3.6 SIP Option Tags 228
ZA.3.7 INFO Message Body Parts 228
ZA.3.7.1 General 228
ZA.3.7.2 SIP Content-Type header field value 228
ZA.3.7.3 SIP Content-Disposition header field value 228
ZA.3.7.4 Message body syntax 228
ZA.3.8 Info Package Usage Restrictions 228
ZA.3.9 Rate of INFO Requests 228
ZA.3.10 Info Package Security Considerations 228
ZA.3.11 Implementation Details and Examples 229
ZA.4 Event-Notification Info Package 229
ZA.4.1 Overall General 229
ZA.4.2 Overall Description 229
ZA.4.3 Applicability 229
ZA.4.4 Info Package Name 229

Koninklijke KPN NV - Exhibit 2010
Samsung Electronics America, Inc. et al. v. Koninklijke KPN NV PTAB-IPR2025-00502
Page 13 of 237

ZA.4.5 Info Package Parameters 229
ZA.4.6 SIP Option Tags 229
ZA.4.7 INFO Message Body Parts 229
ZA.4.7.1 General 229
ZA.4.7.2 SIP Content-Type header field value 230
ZA.4.7.3 SIP Content-Disposition header field value 230
ZA.4.7.4 Message body syntax 230
ZA.4.8 Info Package Usage Restrictions 230
ZA.4.9 Rate of INFO Requests 230
ZA.4.10 Info Package Security Considerations 230
ZA.4.11 Implementation Details and Examples 230
ZA.5 CoD-Playlist Info Package 230
ZA.5.1 Overall General 230
ZA.5.2 Overall Description 230
ZA.5.3 Applicability 231
ZA.5.4 Info Package Name 231
ZA.5.5 Info Package Parameters 231
ZA.5.6 SIP Option Tags 231
ZA.5.7 INFO Message Body Parts 231
ZA.5.7.1 General 231
ZA.5.7.2 SIP Content-Type header field value 231
ZA.5.7.3 SIP Content-Disposition header field value 231
ZA.5.7.4 Message body syntax 231
ZA.5.8 Info Package Usage Restrictions 231
ZA.5.9 Rate of INFO Requests 231
ZA.5.10 Info Package Security Considerations 232
ZA.5.11 Implementation Details and Examples 232

Annex ZZZ (informative): Change history 233

History 237

Koninklijke KPN NV - Exhibit 2010
Samsung Electronics America, Inc. et al. v. Koninklijke KPN NV PTAB-IPR2025-00502
Page 14 of 237

Intellectual Property Rights

IPRs essential or potentially essential to the present document may have been declared to ETSI. The information pertaining to these essential IPRs, if any, is publicly available for **ETSI members and non-members**, and can be found in ETSI SR 000 314: *"Intellectual Property Rights (IPRs); Essential, or potentially Essential, IPRs notified to ETSI in respect of ETSI standards"*, which is available from the ETSI Secretariat. Latest updates are available on the ETSI Web server (http://webapp.etsi.org/IPR/home.asp).

Pursuant to the ETSI IPR Policy, no investigation, including IPR searches, has been carried out by ETSI. No guarantee can be given as to the existence of other IPRs not referenced in ETSI SR 000 314 (or the updates on the ETSI Web server) which are, or may be, or may become, essential to the present document.

Foreword

This Technical Specification (TS) has been produced by ETSI Technical Committee Telecommunications and Internet converged Services and Protocols for Advanced Networking (TISPAN).

Koninklijke KPN NV - Exhibit 2010
Samsung Electronics America, Inc. et al. v. Koninklijke KPN NV PTAB-IPR2025-00502
Page 15 of 237

1 Scope

The present document describes the Procedures on the Functional Entities and Call Flows for the protocols and their possible enhancements to support IPTV services based on the architecture and stage 2 information flows described in TS 182 027 [2].

The possible enhancements of protocols will define the scope of new or enhanced protocol specifications.

Besides, the interaction with other Simulation Service will be considered.

NOTE: The present document relies on the architectural framework defined in TS 182 027 [2] for IMS-based IPTV Stage 2 and may need to be updated once the open issues identified in the present document are resolved.

The present document is applicable to:

- the interface between the User Equipment (UE) and the Call Session Control Function (CSCF);
- the interface between the S-CSCF and IPTV Service Control Functions (SCF);
- the interface between the S-CSCF and IPTV Service Discovery Functions (SDF);
- the interface between the S-CSCF and the Media Control Functions (MCF);
- the interface between the User Equipment (UE) and IPTV Service Selection Functions(SSF);
- the interface between the User Equipment (UE) and Elementary Control Functions (ECF)/Elementary Forwarding Functions (EFF);
- the interface between the User Equipment (UE) and IPTV Service Control Functions (SCF).

2 References

References are either specific (identified by date of publication and/or edition number or version number) or non-specific.

- For a specific reference, subsequent revisions do not apply.
- Non-specific reference may be made only to a complete document or a part thereof and only in the following cases:
  - if it is accepted that it will be possible to use all future changes of the referenced document for the purposes of the referring document;
  - for informative references.

Referenced documents which are not found to be publicly available in the expected location might be found at http://docbox.etsi.org/Reference.

NOTE: While any hyperlinks included in this clause were valid at the time of publication ETSI cannot guarantee their long term validity.

2.1 Normative references

The following referenced documents are indispensable for the application of the present document. For dated references, only the edition cited applies. For non-specific references, the latest edition of the referenced document (including any amendments) applies.

[1] ETSI ES 282 007: "Telecommunications and Internet converged Services and Protocols for Advanced Networking (TISPAN); IP Multimedia Subsystem (IMS); Functional architecture".

Koninklijke KPN NV - Exhibit 2010
Samsung Electronics America, Inc. et al. v. Koninklijke KPN NV PTAB-IPR2025-00502
Page 16 of 237

[2] ETSI TS 182 027: "Telecommunications and Internet converged Services and Protocols for Advanced Networking (TISPAN); IPTV Architecture; IPTV functions supported by the IMS subsystem".

[3] ETSI TS 102 034: "Digital Video Broadcasting (DVB); Transport of MPEG-2 TS Based DVB Services over IP Based Networks".

[4] ETSI TS 102 471: "Digital Video Broadcasting (DVB); IP Datacast over DVB-H: Electronic Service Guide (ESG)".

[5] ETSI TS 102 472: "Digital Video Broadcasting (DVB); IP Datacast over DVB-H: Content Delivery Protocols".

[6] OMA-TS-BCAST-ServiceGuide-V1-0: "Open Mobile Alliance: Service Guide for Mobile Broadcast Services".

[7] OMA-TS-BCAST-DVB-Adaptation-V1-0: "Open Mobile Alliance: Broadcast Distribution System Adaptation - IPDC over DVB-H".

[8] IETF RFC 2326: "Real Time Streaming Protocol (RTSP)".

[9] IETF RFC 4825: "The Extensible Markup Language (XML) Configuration Access Protocol (XCAP)".

[10] ETSI TS 187 003: "Telecommunications and Internet converged Services and Protocols for Advanced Networking (TISPAN); NGN Security; Security Architecture".

[11] ETSI TS 124 109: "Universal Mobile Telecommunications System (UMTS); Bootstrapping interface (Ub) and network application function interface (Ua); Protocol details (3GPP TS 24.109 Release 7)".

[12] ETSI TS 183 023: "Telecommunications and Internet converged Services and Protocols for Advanced Networking (TISPAN); PSTN/ISDN simulation services; Extensible Markup Language (XML) Configuration Access Protocol (XCAP) over the Ut interface for Manipulating NGN PSTN/ISDN Simulation Services".

[13] ETSI TS 102 539: "Digital Video Broadcasting (DVB); Carriage of Broadband Content Guide (BCG) information over Internet Protocol (IP)".

[14] ETSI TS 133 222: "Digital cellular telecommunications system (Phase 2+); Universal Mobile Telecommunications System (UMTS); Generic Authentication Architecture (GAA); Access to network application functions using Hypertext Transfer Protocol over Transport Layer Security (HTTPS) (3GPP TS 33.222 Release 7)".

[15] IETF RFC 5874 : "An Extensible Markup Language (XML) Document Format for Indicating A Change in XML Configuration Access Protocol (XCAP) Resources".

[16] ETSI TS 184 009: "Telecommunications and Internet converged Services and Protocols for Advanced Networking (TISPAN) Rules covering the use of TV URIs for the Identification of Television Channels".

[17] IETF RFC 3925: "Vendor-Identifying Vendor Options for Dynamic Host Configuration Protocol version 4 (DHCPv4)".

[18] IETF RFC 1035: "Domain names - implementation and specification".

[19] IETF RFC 1034: "Domain names - concepts and facilities".

[20] ETSI ES 283 003: "Telecommunications and Internet converged Services and Protocols for Advanced Networking (TISPAN); IP Multimedia Call Control Protocol based on Session Initiation Protocol (SIP) and Session Description Protocol (SDP) Stage 3 [3GPP TS 24.229 Release 9]".

[21] ETSI ES 283 030: "Telecommunications and Internet converged Services and Protocols for Advanced Networking (TISPAN); Presence Service Capability; Protocol Specification [3GPP TS 24.141 V7.0.0, modified and OMA-TS-Presence-SIMPLE-V1-0, modified]".

Koninklijke KPN NV - Exhibit 2010
Samsung Electronics America, Inc. et al. v. Koninklijke KPN NV PTAB-IPR2025-00502
Page 17 of 237

[22] VOID.

[23] OMA-TS-Presence-SIMPLE-V1-0-20060725-A: "Open Mobile Alliance: Presence SIMPLE Specification".

[24] ETSI TS 124 229: "Digital cellular telecommunications system (Phase 2+); Universal Mobile Telecommunications System (UMTS); Internet Protocol (IP) multimedia call control protocol based on Session Initiation Protocol (SIP) and Session Description Protocol (SDP); Stage 3 (3GPP TS 24.229 Release 9)".

[25] IETF RFC 4756: "Forward Error Correction Grouping Semantics in Session Description Protocol".

[26] IETF RFC 5875 :"An Extensible Markup Language (XML) Configuration Access Protocol (XCAP) Diff Event Package".

[27] VOID.

[28] IETF RFC 3376: "Internet Group Management Protocol, Version 3".

[29] IETF RFC 3810: "Multicast Listener Discovery Version 2 (MLDv2) for IPv6".

[30] IETF RFC 2616: "Hypertext Transfer Protocol -- HTTP/1.1".

[31] IETF RFC 2782: "A DNS RR for specifying the location of services (DNS SRV)".

[32] IETF RFC 2246: "The TLS Protocol Version 1.0".

[33] ETSI TS 102 822-3-1: "Broadcast and On-line Services: Search, select, and rightful use of content on personal storage systems ("TV-Anytime"); Part 3: Metadata; Sub-part 1: Phase 1 - Metadata schemas".

[34] ETSI TS 101 154: "Digital Video Broadcasting (DVB); Specification for the use of Video and Audio Coding in Broadcasting Applications based on the MPEG-2 Transport Stream".

[35] ETSI TS 102 822-4: "Broadcast and On-line Services: Search, select, and rightful use of content on personal storage systems ("TV-Anytime"); Part 4: Phase 1 - Content referencing".

[36] ETSI ES 283 035: "Telecommunications and Internet converged Services and Protocols for Advanced Networking (TISPAN); Network Attachment Sub-System (NASS); e2 interface based on the DIAMETER protocol".

[37] DSL Forum TR-069 Amendment 2: "CPE WAN Management Protocol ".

[38] ETSI TS 183 060: "Telecommunications and Internet converged Services and Protocols for Advanced Networking (TISPAN); Resource and Admission Control Subsystem (RACS); Re interface based on the DIAMETER protocol".

[39] W3C: "Synchronized Multimedia Integration Language (SMIL 2.1)".

[40] IETF RFC 4660: "Functional Description of Event Notification Filtering".

[41] IETF RFC 4661: "An Extensible Markup Language (XML)-Based Format for Event Notification Filtering".

[42] IETF RFC 4235: "An INVITE-Initiated Dialog Event Package for the Session Initiation Protocol (SIP)".

[43] IETF RFC 5760: "RTP Control Protocol (RTCP) Extensions for Single-Source Multicast Sessions with Unicast Feedback".

[44] IETF RFC 3550: "RTP: A Transport Protocol for Real-Time Applications".

[45] IETF RFC 3611: "RTP Control Protocol Extended Reports (RTCP XR)".

[46] IETF RFC 5576: "Source-Specific Media Attributes in the Session Description Protocol (SDP)".

Koninklijke KPN NV - Exhibit 2010
Samsung Electronics America, Inc. et al. v. Koninklijke KPN NV PTAB-IPR2025-00502
Page 18 of 237

[47] IETF RFC 3605: "Real Time Control Protocol (RTCP) attribute in Session Description Protocol (SDP)".

[48] IETF RFC 3611: "RTP Control Protocol Extended Reports (RTCP XR)".

[49] ETSI TS 102 822-6-1: "Broadcast and On-line Services: Search, select, and rightful use of content on personal storage systems ("TV-Anytime"); Part 6: Delivery of metadata over a bi-directional network; Sub-part 1: Service and transport".

[50] ETSI TS 126 234: "Technical Specification Group Services and System Aspects; Transparent end-to-end Packet-switched Streaming Service(PSS); Protocol and codecs (3GPP TS 26.234 Release 9)".

[51] OMA-TS-SIMPLE_IM-V1_0-20100322-C:"OMA: Instant Messaging using SIMPLE".

[52] ETSI TS 124 247: " Digital cellular telecommunications system (Phase 2+); Universal Mobile Telecommunications System (UMTS); LTE; Messaging service using the IP Multimedia (IM) Core Network (CN) subsystem; Stage 3 (3GPP TS 24.247 Release 9).

[53] ETSI TS 126 237: "IP Multimedia Subsystem (IMS) based Packet Switch Streaming (PSS) and Multimedia Broadcast/Multicast Service (MBMS) User Service; Protocols"; (3GPP TS 26.237 Release 9)..

[54] IETF RFC 4745: "A Document Format for Expressing Privacy Preferences".

[55] IETF RFC 5025: "Presence Authorization Rules".

[56] OMA-TS-Presence_SIMPLE_XDM: "Presence XDM Specification".

[57] ETSI TS 102 822-3-3: "Broadcast and On-line Services: Search, select, and rightful use of content on personal storage systems ("TV-Anytime"); Part 3: Metadata; Sub-part 3: Phase 2 – Extended Metadata schema".

[58] IETF RFC 1305: "Network Time Protocol (Version 3), Specification, Implementation and Analysis".

[59] IETF RFC 3551: "RTP Profile for Audio and Video Conferences with Minimal Control"

[60] 3GPP TS 23.237: " Technical Specification Group Services and Systems Aspects; IP Multimedia Subsystem (IMS) Service Continuity-stage 2; (Release 9)".

[61] 3GPP TS 24.237: " Technical Specification Group Services and Systems Aspects; IP Multimedia Subsystem (IMS) Service Continuity-stage 3; (Release 9)".

[62] IETF, RFC 5627: " Obtaining and Using Globally Routable User Agent (UA) URIs (GRUU) in the Session Initiation Protocol (SIP) ".

[63] ETSI TS 181 016: "Telecommunications and Internet converged Services and Protocols for Advanced Networking (TISPAN); "Service Layer Requirements to Integrate NGN Services and IPTV".

[64] IETF RFC 2234: "Augmented BNF for Syntax Specifications: ABNF".

[65] IETF RFC 3261: "SIP: Session Initiation Protocol"

2.2 Informative references

The following referenced documents are not essential to the use of the present document but they assist the user with regard to a particular subject area. For non-specific references, the latest version of the referenced document (including any amendments) applies.

[i.1] Void.

Koninklijke KPN NV - Exhibit 2010
Samsung Electronics America, Inc. et al. v. Koninklijke KPN NV PTAB-IPR2025-00502
Page 19 of 237

[i.2] ETSI TS 183 017: "Telecommunications and Internet Converged Services and Protocols for Advanced Networking (TISPAN); Resource and Admission Control: DIAMETER protocol for session based policy set-up information exchange between the Application Function (AF) and the Service Policy Decision Function (SPDF); Protocol specification".

[i.3] ETSI TS 183 033: "Telecommunications and Internet converged Services and Protocols for Advanced Networking (TISPAN); IP Multimedia; Diameter based protocol for the interfaces between the Call Session Control Function and the User Profile Server Function/Subscription Locator Function; Signalling flows and protocol details [3GPP TS 29.228 and 3GPP TS 29.229, Release 9]".

[i.4] ETSI TS 129 329: "Digital cellular telecommunications system (Phase 2+); Universal Mobile Telecommunications System (UMTS); Sh interface based on the Diameter protocol; Protocol details (3GPP TS 29.329 Release 7)".

[i.5] IEEE 1003.1-2004: "Standard for information technology - portable operating system interface (POSIX). Shell and utilities".

[i.6] F. Boronat, J. Lloret, M. García, "Multimedia group and inter-stream synchronization techniques: A comparative study", Elsevier Information Systems 34 (2009), pp. 108–131.

[i.7] ETSI TS 187 013: "Telecommunications and Internet Converged Services and Protocols for Advanced Networking (TISPAN); Feasibility study on IPTV Security Architecture"

[i.8] ITU-T G.114: "General Recommendations on the transmission quality for an entire international telephone connection, One-way transmission time", May 2003.

[i.9] IETF draft: "RTSP 2.0 Asynchronous Notification, draft-stiemerling-rtsp-announce-01"

[i.10] IETF draft-stiemerling-rtsp-announce-01: "RTSP 2.0 Asynchronous Notification".

[i.11] IETF draft-ietf-sip-ipv6-abnf-fix-05: “Essential correction for IPv6 ABNF and URI comparison in RFC3261”

3 Abbreviations

For the purposes of the present document, the following abbreviations apply:

ACK	ACKnowledge character
AP	Authentication Proxy
AS	Application Server
AUID	Application Unique ID
B2BUA	Back To Back UA
BC	BroadCast
BCG	Broadband Content Guide
CNGCF	Customer Network Gateway Configuration Function
CoD	Content on Demand
CRS	Content Recommendation Service
CSCF	Call Session Control Function
C-PVR	Client-side Personal Video Recorder
DHCP	Dynamic Host Configuration Protocol
DNS	Domain Name System
DVB	Digital Video Broadcasting
DVBSTP	DVB SD&S Transport Protocol
ECF/EFF	Elementary Control Function/Elementary Forwarding Function
EPG	Electronic Program Guide
ERE	Extended Regular Expressions
ESG	Electronic Service Guide
FEC	Forward Error Correction
I-CSCF	Interrogation - Call Session Control Function

Koninklijke KPN NV - Exhibit 2010
Samsung Electronics America, Inc. et al. v. Koninklijke KPN NV PTAB-IPR2025-00502
Page 20 of 237

ICSI	IMS Communication Service Identities
IFC	Initial Filter Criteria
IGMP	Internet Group Management Protocol
IMS	IP Multimedia Subsystem
IP	Internet Protocol
IPTV	Internet Protocol TeleVision
MCF	Media Control Function
MDF	Media Delivery Function
MF	Media Function
MLD	Multicast Listener Discovery
MSAS	Media Synchronization Application Server
NGN	Next Generation Network
NPT	Network Time Protocol
NPT	Normal Play Time
N-PVR	Network-side Personal Video Recorder
OMA	Open Mobile Alliance
P-CSCF	Proxy - Call Session Control Function
PSI	Public Service Identity
RACS	Resource and Admission Control Subsystem
RTCP	Real Time Control Protocol
RTP	Real Time Protocol
RTSP	Real Time Streaming Protocol
SAD	Service Action Data
SC	Synchronization Client
SCF	Service Control Function
S-CSCF	Serving - Call Session Control Function
SD&S	Service Discovery and Selection
SDF	Service Discovery Function
SDP	Session Description Protocol
SGDD	Service Guide Delivery Descriptors
SGDU	Service Guide Delivery Units
SIP	Session Initiation Protocol
SNTP	Simple Network Time Protocol
SOAP	Simple Object Access Protocol
SRV	Service Records
SSF	Service Selection Function
SSD	Service State Data
TCP	Transmission Control Protocol
TLS	Transport Layer Security
TsTV	Time shift TV
UA	User Agent
UDP	User Datagram Protocol
UE	User Equipment
URI	Uniform Resource Identifier
XCAP	XML Configuration Access Protocol
XML	eXtensible Markup Language

4 Applicability

4.1 Overview

The overall functional architecture for the IMS-based IPTV service conforms to TS 182 027 [2].

This clause provides the list of protocols and related reference points.

Koninklijke KPN NV - Exhibit 2010
Samsung Electronics America, Inc. et al. v. Koninklijke KPN NV PTAB-IPR2025-00502
Page 21 of 237

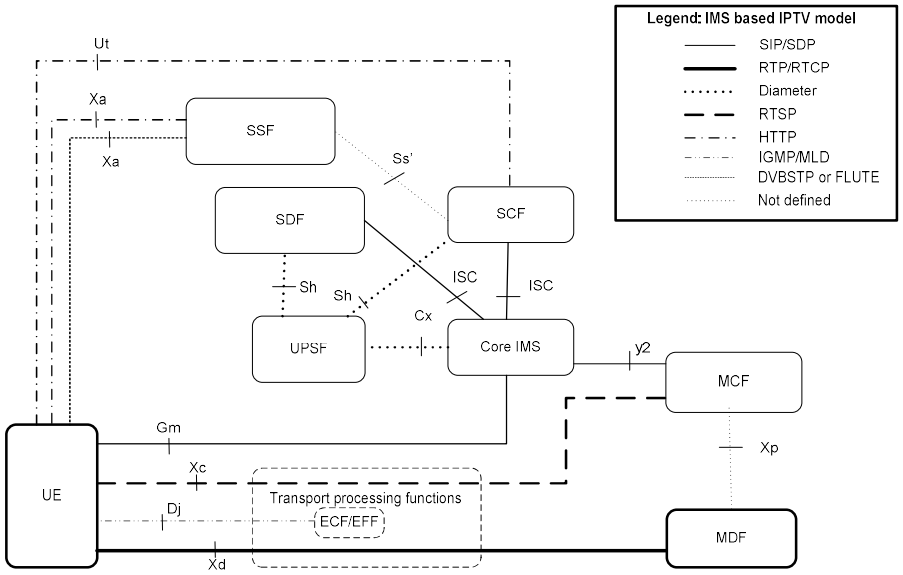

Figure 4.1: Protocols used in functional architecture for the IMS-based IPTV service

Koninklijke KPN NV - Exhibit 2010
Samsung Electronics America, Inc. et al. v. Koninklijke KPN NV PTAB-IPR2025-00502
Page 22 of 237

Table 4.1: IMS based IPTV functional entities and protocols used on reference points

FE/ Reference point (protocol)	UE	IMS core	UPSF	SDF	SSF	SCF	MCF	MDF	ECF/ EFF
UE	---	Gm (SIP/SDP)	---	via Core IMS (SIP/SDP)	Xa (HTTP, DVBSTP, FLUTE)	Ut (HTTP), via Core IMS (SIP/SDP)	Xc (RTSP) (Note 1)	Xd (UDP/RTP /RTCP/ HTTP) (Note 1)	Dj, Di IGMP/ MLD
IMS core	Gm (SIP/SDP)	---	Cx (Diameter)	ISC (SIP/SDP)	---	ISC (SIP/SDP)	y2 (SIP/SDP)	---	---
UPSF	---	Cx (Diameter)	---	Sh (Diameter)	---	Sh (Diameter)	---	---	---
SDF	via Core IMS (SIP/SDP)	ISC (SIP/SDP)	Sh (Diameter)	---	---	---	---	---	---
SSF	Xa (HTTP, DVBSTP, FLUTE)	---	---	---	---	Ss' (not defined)	---	---	---
SCF	Ut (HTTP), via Core IMS (SIP/SDP)	ISC (SIP/SDP)	Sh (Diameter)	---	Ss' (not defined)	---	via Core IMS and y2 (SIP/SDP) ---	---	---
MCF	Xc (RTSP) (Note 1)	y2 (SIP/SDP)	---	---	---	via Core IMS and y2 (SIP/SDP)	---	Xp (not defined)	---
MDF	Xd (UDP/RTP/ RTCP/HTT P) (Note 1)	---	---	---	---	---	Xp (not defined)	---	---
ECF/ EFF	Dj, Di IGMP/ MLD	---	---	---	---	---	---	---	---
NOTE 1: As described in TS 182 027 [2], clauses 6.4 and 6.5, Xc and Xd are logical reference points that can be decomposed into Dj and possibly Di, Ds or Iz reference points depending on the location of the MCF or MDF, and the HTTP is used for the content download. NOTE 2: Annex H lists compliance requirements for the protocols listed in table 4.1.									

Usage of the SIP/SDP protocol across the following interfaces is described in clause 5:

- interface Gm;
- interface ISC;
- interface y2.

Usage of the HTTP protocol across the following interfaces is described in clause 6:

- interface Xa;
- interface Ut;
- interface Xd.

Usage of the RTSP protocol across the following interfaces is described in clause 7:

- interface Xc;
- interface Di, Dj, Ds or lz.

Usage of the UDP/RTP/RTCP protocol across the following interfaces is described in clause 11:

- interface Xd;
- interface Di, Dj, Ds or Iz.

Usage of the IGMP/MLD protocol across the following interfaces is described in clause 8:

Koninklijke KPN NV - Exhibit 2010
Samsung Electronics America, Inc. et al. v. Koninklijke KPN NV PTAB-IPR2025-00502
Page 23 of 237

- interface Xd;
- interface Dj, Di, Ds or Iz.

NOTE: Whether usage of multicast protocols (IGMP,MLD) is supported on Xc, Xd interface or how MDF joins multicast streams (e.g. for N-PVR or BC with trick mode services) is out of the scope of the present document.

Usage of the DVBSTP protocol across the following interface is described in clause 9:

- interface Xa.

Usage of the FLUTE protocol across the following interface is described in clause 10:

- interface Xa.

4.2 Functional entities

4.2.1 User Equipment (UE)

The UE is a functional entity that provides the user with access to IPTV services. For time -and synchronization-sensitive services, the UE shall support NTP/SNTP-based network time services as described in clause 8.2 of [3].

4.2.2 Service Control Function (SCF)

The SCF is a functional entity that provides IPTV service logic and the functions required to support execution of such logic.

4.2.3 Service Discovery Function (SDF)

An SDF is a functional entity that provides service attachment information to the UE.

4.2.4 Service Selection Function (SSF)

An SSF is a functional entity that provides service selection information to the UE.

4.2.5 Media Control Function (MCF)

The MCF is a functional entity that provides the UE with functions required to control media flows and manages the MDFs under its control.

4.2.6 Media Delivery Function (MDF)

The MDF is a functional entity that delivers content data to the UE.

4.2.7 Core-IMS

The Core IMS includes a number of functional entities identified in ES 282 007 [1]. For the purpose of supporting IPTV services, the following functional entities of the Core IMS are involved:

- the P-CSCF;
- the S-CSCF;
- the I-CSCF;
- the IBCF in case the P-CSCF and the I/S-CSCF or the CSCF and the MCF are in different administrative domains.

Koninklijke KPN NV - Exhibit 2010
Samsung Electronics America, Inc. et al. v. Koninklijke KPN NV PTAB-IPR2025-00502
Page 24 of 237

The behaviour of these functional entities with regards to SIP and SDP shall conform to ES 283 003 [20].

4.2.8 Inter-destination media synchronization entities

Figure 4.2. shows the two functional entities involved in inter-destination media synchronization, i.e. the media synchronization application server (MSAS) and Synchronization Client (SC). Optionally, there is also a Synchronization Client' (SC'). These functional entities are described in clauses 4.2.8.1, 4.2.8.2 and 4.2.8.3, respectively.

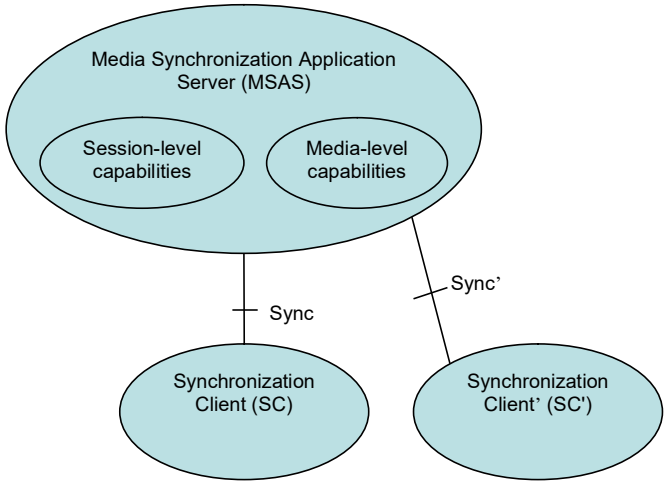

Figure 4.2: Functional entities and reference points for inter-destination media synchronization.

As described in TS 182 027 [2], there exist different mappings of the SC and MSAS onto the functional entities depicted in Figure 4.1. The mapping of the SC as an elementary function of the UE is aimed at small-scale deployments of services that require media synchronization and only a limited number of UEs that use media synchronization. It reuses existing IPTV sessions.

NOTE: Synchronization signalling procedures are initiated by the SC. This means that a UE without SC functionality will not be involved in synchronization signalling.

The mapping of the SC as an adjunct function that may be co-resident with any of the appropriate elements of the Transport Processing Function is aimed at large-scale deployment of media synchronization.

The process of inter-destination media synchronization involves three basis steps:

1. Synchronization session initiation
2. Synchronization status information and synchronization settings instruction exchange
3. Synchronization session termination

Given these steps, the Sync reference point is decomposed as follows:

- Synchronization session initiation information is exchanged over the Gm and ISC reference points, using SIP/SDP. Synchronization session initiation information can also be exchanged over the Xc reference point, using RTSP/SDP.
- Synchronization status information and delay information in the form of synchronization settings instruction is exchanged over the Xd reference points, using RTCP.

Koninklijke KPN NV - Exhibit 2010
Samsung Electronics America, Inc. et al. v. Koninklijke KPN NV PTAB-IPR2025-00502
Page 25 of 237

- Synchronization session termination is exchanged over the Gm and ISC reference points, using SIP/SDP. Synchronization session termination information can also be exchanged over the Xc reference point, using RTSP/SDP.

RTCP reports with synchronization status information or synchronization settings instructions can be sent directly between UEs, if a direct communication channel between UEs already exists. In that case, one UE acts as co-located SC+MSAS as described in clauses 11.3.2 and A.5.2.3.

The Sync' reference point is used to report synchronization correlation information on the synchronicity relationship between the incoming media stream (which could be received by some SCs)and the outgoing media stream(s) (which could be received by other SCs) from the SC' to the MSAS. The Sync' reference point uses RTCP.

4.2.8.1 MSAS

The MSAS is a functional entity that coordinates session synchronization with SCs and SC' for inter-destination media synchronization purposes. The MSAS session-level capabilities are reflected as independent functional entity or as elementary functions of the SCF, its media-level capabilities are reflected as adjunct functions of other functional entities. For synchronization using a direct communication channel between multiple UEs, the MSAS is co-located with the SC in a UE. Tasks of the MSAS are setting up and accepting synchronization sessions with/from SCs; collecting synchronization status information from SCs; collecting synchronization correlation information from SC's; calculating delay information and derive synchronization settings instructions for the SCs and distributing synchronization settings instructions to SCs.

4.2.8.2 SC

The SC is a functional entity that coordinates session synchronization with the MSAS for inter-destination media synchronization purposes. It is an elementary function of the UE or an adjunct function of the Transport Processing Functions. Tasks of the SC are setting up and accepting synchronization sessions with/from the MSAS; sending synchronization status information to the MSAS; receiving delay information in the form of synchronization settings instructions from the MSAS; and delaying (buffering) a media stream according to the received synchronization settings instruction.

4.2.8.3 SC'

The SC' is a functional entity that assists session synchronization by the MSAS for inter-destination media synchronization purposes. It is an elementary or adjunct function of functional entities that modify and/or re-originate media streams, e.g. a transcoder or a mixer in an MDF.

4.2.9 Service Protection and Content Protection function (SCP)

In the IMS based IPTV architecture, the functional entities and elementary functions that are responsible for Service protection and content protection are defined in TS 182 027 [2] section 10.2 and 10.3, the NGN security architecture TS 187 003 [10], and the IPTV security architecture TR 187 013 [i.7].

4.3 Compliance

Compliance for the IMS-based IPTV service conforms to Table 4.3 below.

Table 4.3: IPTV services and features supported by TISPAN IMS based IPTV subsystem

NGN IPTV **Service & Feature**	**TISPAN R3 Stage 2**	**TISPAN R3 Stage 3**
Specification	ETSI TS 182 028 Release 3	Present document
Linear/ Broadcast TV	M	M

Koninklijke KPN NV - Exhibit 2010
Samsung Electronics America, Inc. et al. v. Koninklijke KPN NV PTAB-IPR2025-00502
Page 26 of 237

Linear/ Broadcast TV with Trick Play	O	O
Time Shifted TV	O	O
Content on Demand (CoD)	M	M
Push CoD	O	O
Network PVR	M/O(See NOTE 2)	M/O(See NOTE 2)
Client PVR	O (See NOTE 2)	O (See NOTE 2)
Audio	O	O
Pay-Per-View	O	O
Interactive TV	O	O
Service discovery	M	M
Service Information (EPG)	M	M
Parental Control	M/O(See NOTE 3)	M/O(See NOTE 3)
User Profiling & Personalization	O	O
Communications and Messaging	O	O
Notifications	O	O
IPTV Presence	O	O
Interaction between users	O	O
Interaction with NGN services	O	O
Advertising	M (See NOTE 4)	M (See NOTE 4)
Targeted Advertising	O	O
User Generated Content	O	O
Internationalization	O	O
Content recommendation	O	O
Games	O	O
Picture	O	O
Bookmarks	O	O
Personalized channel	O	O
Personalized Service Composition	O	O
Service Portability	O	O
Service Continuation between IPTV UEs	O	O
Service Continuation fixed-mobile	O	O

Koninklijke KPN NV - Exhibit 2010
Samsung Electronics America, Inc. et al. v. Koninklijke KPN NV PTAB-IPR2025-00502
Page 27 of 237

Remote Control of IPTV services	O	O
Emergency Information.	O	O
Interaction with 3rd Party application (e.g. Parlay)	O	O
Service synchronization	O	O
Incoming call management	O	O

NOTE 1: M – Mandatory, O- Optional, NA – not available or not specified (out of scope in release) in architecture

NOTE 2: It is recommended that at least one type of PVR is supported by the IPTV system.

NOTE 3: Mandating this feature is subject to local regulatory policies.

NOTE 4: *Advertising* refers to traditional broadcast based advertising services which impose no new requirements on IMS based IPTV subsystem

Features that are only used by optional services are optional as well.

5 Procedures using SIP/SDP for IMS-based IPTV

Use the SIP/SDP protocol across the following interfaces is described in this clause:

- interface Gm;
- interface ISC;
- interface y2.

SIP/SDP capable functional entities are following:

- UE.
- SCF.
- SDF.
- MCF.
- Core IMS.

NOTE: Summary of compliancy requirements and referred specification are listed in clause H.1.

5.1 User Equipment (UE)

5.1.1 Procedure for IMS registration

As specified in TS 182 027 [2], clause 8.2 the UE shall perform IMS registration before launching a service attachment procedure.

The behaviour of the UE with regards to IMS registration shall comply with ES 283 003 [20].

5.1.2 Procedure for service attachment

If the SDF is known as per annex I the Pull mode as in clause 5.1.2.2 shall be used, else the UE shall be preconfigured to use the public user identity of the user to send a SIP SUBSCRIBE request according to the Pull mode or to expect a SIP MESSAGE request according to Push mode as in clause 5.1.2.1.

Koninklijke KPN NV - Exhibit 2010
Samsung Electronics America, Inc. et al. v. Koninklijke KPN NV PTAB-IPR2025-00502
Page 28 of 237

5.1.2.1 Push mode

Upon receipt of a SIP MESSAGE request from the SDF, the UE shall parse the XML document as described in clause 5.1.2.2.2.

5.1.2.2 Pull mode

Service Attachment, the UE shall generate a SUBSCRIBE request. The behaviour of the UE when processing a SUBSCRIBE request shall conform to ES 283 003 [20], clause 5.1.2A.1.

5.1.2.2.1 Subscription

When the UE intends to retrieve service attachment information from the SDF, it shall generate a SUBSCRIBE request for the "ua-profile" event package defined in Annex [Y].

The contents of the SUBSCRIBE request shall be as follows:

- The value of the Request-URI shall be set to one of following:
  - The PSI of the SDF which is retrieved using SDF Discovery procedures specified in annex I, or
  - When the SDF identify is not present the public user identity of the IPTV end user.
- The From and To header shall be set to the public user identity of the IPTV end user.
- The Accept header shall include the content-type identifier that corresponds to the registered MIME type of XML documents representing IPTV profiles: "application/vnd.etsi.iptvdiscovery+xml".
- The Event header shall be set to the "ua-profile" event package.
- The Event parameters shall be set as follows:
  - The "profile-type" parameter shall be set to "application".
  - The "vendor", "model" and "version" parameter values shall be set to values specified by the implementer of the user equipment, as specified in ES 283 003 [20].
  - The "appids" parameter shall be set to " urn:org:etsi:ngn:applications:ims-iptv-service-discovery".

The UE may include a SIP SUBSCRIBE message body associated with the appid " urn:org:etsi:ngn:applications:ims-iptv-service-discovery ". The message body includes the capabilities of the UE which is sent to the SDF.

NOTE: Process of registering the appid is aligned with IETF specification in Annex [Y].

If the SIP SUBSCRIBE contains a message body, the details of the SIP SUBSCRIBE are as follows:

- Content Type header shall be set to "application/vnd.etsi.iptvueprofile+xml".
- A message body shall be present for conveying UE-specific information as defined in annex P. This includes:
  - User Equipment ID.
  - User Equipment Class: Specifies the type of UE. The currently defined types are "STB", "Mobile" and "PC".
  - UE Capabilities: This defines the set of UE capabilities and could include:
    - Physical resolution of the screen of the rendering device (defined in vertical and horizontal number of pixels).
    - Supported coding formats (defined using the Coding XML element from TV-Anytime (TS 102 822-3-1 [333333]), and using the classification schemes from MPEG7 and DVB).
    - Optionally, supported Video Frame Rates (defined as per TS 101 154 [343434]) associated with the encoding format.

Formatted: Font: Check spelling and grammar

Formatted: Font: Check spelling and grammar

Koninklijke KPN NV - Exhibit 2010
Samsung Electronics America, Inc. et al. v. Koninklijke KPN NV PTAB-IPR2025-00502
Page 29 of 237

- If the UE supports a content protection, it shall include in its UE capabilities, supported Content Protection System associated with the supported protected formats. A Content Protection System is defined via a URN with the DVB CA System ID (16 bit number) as registered in DVB http://www.dvbservices.com/identifiers/ca_system_id). It shall be signalled by prefixing the decimal number format of CA_System_ID with "urn:dvb:casystemid:". For example, the CA_System_ID hexadecimal 0x1234, is encoded as "urn:dvb:casystemid:4660". Note that the decimal number format of CA_System_ID shall not have leading zeroes. A supported protected format shall be signalled by its mime type (i.e. "video/mp2t" for MPEG2-TS).
- Supported transport protocols (MPEG2TS over UDP, MPEG2TS over RTP, direct RTP).

Upon receipt of a 2xx response to the SUBSCRIBE request, the UE shall store the information for the established dialog and the expiration time as indicated in the Expires header of the received response.

The UE shall automatically refresh the subscription, either 600 seconds before the expiration time if the initial subscription was for greater than 1 200 seconds, or when half of the time has expired if the initial subscription was for 1 200 seconds or less. If a SUBSCRIBE request to refresh a subscription fails with a non-481 response, the UE shall still consider the original subscription valid for the duration of the most recently known "Expires" value according to ES 283 003 [20]. Otherwise, the UE shall consider the subscription invalid and start a new initial subscription according to ES 283 003 [20].

5.1.2.2.2 Receiving notifications

Upon receipt of a NOTIFY request on the dialog which was generated during subscription, the UE shall look for a message body with a content-type header indicating "application/vnd.etsi.iptvdiscovery+xml ". The IPTV application within the UE shall parse the XML document contained in the message body.

The list of parameters which are described in clause 5.2.2.3 shall be used for service selection information retrieval according to clause 6.1.1 in unicast mode and clause 8.1.1 in multicast mode.

When parsing the list of parameters the UE shall take the following action:

- Information relates to SSF whom the UE has already an entree.
  - If the "@version" attribute is present and has not the same value or if not present, then the UE performs the following actions:
    - For parameters related to this SSF already present in the UE: the UE shall update these parameters with the new values sent by the SSF. If the Segment@Version has not the same value, the UE shall update service selection information from the SSF before using it.
    - For parameters related to this SSF not present in the UE: the UE shall store the new parameters.
  - If the "@version" attribute is present and has the same value, the UE shall not update the stored SSF information.
- Information relates to an SSF not known by the UE: the UE creates a new entry for this SSF with all indicated parameters.

After all elements have been processed, the UE shall return a SIP 200 OK response to the NOTIFY request.

Failure to perform subscription refresh does not imply that there is a loss of communication to SSF or SCF. The UE has an option to continue using the lists of parameters from the last NOTIFY.

After deregistration, the UE may keep stored information on per user basis. As for subscription refresh, the UE may use the stored information if initial subscription fails after a new registration.

5.1.3 Procedure for BC service

5.1.3.1 UE-initiated session initiation

The UE shall support the procedures specified in ES 283 003 [20] for originating sessions.

Koninklijke KPN NV - Exhibit 2010
Samsung Electronics America, Inc. et al. v. Koninklijke KPN NV PTAB-IPR2025-00502
Page 30 of 237

Upon a request for a BC session initiation, the UE shall generate an initial INVITE request as specified in ES 283 003 [20] for an originating UE. The Request-URI in the INVITE request shall be the well known PSI (Public Service Identifier) of the BC Service. If the UE supports the SIP INFO framework, as defined in draft-ietf-sipcore-info-events-08, the UE shall indicate so by including Recv-Info header in the INVITE with a value set to 'nil'.

Note that the inclusion of the Recv-Info header is the indication that the UE supports the SIP INFO framework. If the UE does support the reception of other INFO packages (for other applications), and it wishes to indicate so, it can replace the value nil with the appropriate list of INFO packages.

Note that the draft defines a mechanism for backward compatibility when one end in the SIP dialog supports the SIP INFO framework while the other peer does not support the SIP INFO framework. Section 9 in the draft details co-existence within a SIP dialog of legacy SIP INFO and SIP INFO based on the SIP INFO framework

An SDP Offer shall be included in the request. The SDP offer shall be done in accordance with the parameters received during UE service selection procedure and with media capabilities and required bandwidth available for the BC session. If the user desires to join a BC service outside of this negotiated set of channels, a session modification is required.

The SDP offer at media level shall include the following elements:

- The m-line(s) shall be set according to the mapping defined in clause L.2 for the BC service which the UE intends to join first.
- The c-line(s) shall be set according to the mapping defined in clause L.2 for the BC service which the UE intends to join first.
- An a=bc_service:BCServiceId line to indicate the BC service which the UE intends to join first.
- Optionally one or more a=bc_service_package attributes (see below) as defined in annex N. In the first initial offer it shall not contain mult_list and bc_service_id list parameters. If the initiation is the result of a previously denied initiation the UE may restrict the BC services by including mult_list.
- If the UE has knowledge of the largest bandwidth of all the BC services included in the session, the b-line shall be included and set to this value.
- An a=recvonly line.

Additionally, FEC streams may be defined, as described in clause 5.1.3.1.1.

When the UE receives any SIP request or response, and if the UE supports the SIP INFO framework, it shall look for the Recv-Info header.

If the header is present then the UE shall follow the network request as set in the header, to report/not report the selected channel.

If the header is absent, then the UE may optionally report the selected channel outside the SIP INFO framework.

The UE shall then examine the media parameters in the received SDP. The UE shall restrict the BC services that it joins according to the a=bc_service_package parameters received from the SCF. If the UE has retrieved the IPTV User profile prior to BC session initiation, it may ignore the a=bc_service_package parameters, if present (see clause 5.3.1.1).

If the user desires to join a BC service outside of this negotiated set, a session modification is required.

If the UE receives a 488 error code with warning 370 Insufficient Bandwidth the UE may perform a new SIP INVITE with a lower maximum bandwidth for BC service the UE intends to join. This procedure may be repeated. If no agreement can be reached the UE may display a failure message to the user.

When the UE receives the SIP final response, the UE shall joins the multicast channel according to the a=bc_service line.

5.1.3.1.1 Additional SDP lines for FEC streams

When the UE decides to connect to FEC stream(s) associated to the original BC stream(s), it shall include additional SDP lines in the SDP offer as follows:

- One or more m line(s) for each FEC stream exposed through the SSF:

Koninklijke KPN NV - Exhibit 2010
Samsung Electronics America, Inc. et al. v. Koninklijke KPN NV PTAB-IPR2025-00502
Page 31 of 237

- It shall be set according to the mapping defined in clause L.2.
- It shall contain a c-line according to the mapping defined in clause L.2.

If the BC content is defined through a single m-line, a grouping line may be included.

If the BC content is defined through several m-lines, grouping line(s) shall be included, one for each BC m-line that is associated to a FEC stream.

The grouping line uses the "FEC" semantic as defined in RFC 4756 [25]:

- a=group:FEC:<original stream id> <FEC stream id>
  The present document supports only the DVB-IP AL-FEC Base layer, so there can be only one <FEC stream id> associated to an original stream.
  - The original stream id shall reflect the value held by the media description of one stream in its a=mid attribute.
  - The FEC stream id shall reflect the value held by the media description of the DVB-IP AL-FEC Base layer FEC stream (associated to the original stream) in its a=mid attribute.

Furthermore, when grouping line is included, there shall be an additional media identification attribute within the m-line of the original stream that is within the grouping:

- a=mid:<original stream id>.

5.1.3.1A SCF-initiated session initiation

The UE shall support the procedures specified in ES 283 003 [20] for handling sessions.

Upon receipt of SIP INVITE request, and if the UE supports the SIP INFO framework, it shall look for the Recv-Info header.

If the header is present then the UE shall follow the network request as set in the header, to report/not report the selected channel.

If the header is absent, then the UE may optionally report the selected channel outside the SIP INFO framework.

The UE then checks the P-Asserted-Identity header for a well-formed PSI of the BC service, and the SDP parameters to determine that it is a BC session initiation request. In particular:

- The UE shall examine the a=bc_service parameter. This parameter contains the BCServiceId (channel) the SCF wants the UE to join.
- If present it shall examine the a=bc_service_package attributes and store the attributes. If the UE has retrieved the IPTV User profile prior to BC session initiation, it may ignore the a=bc_service_package parameters.
- It shall examine the c-line(s) and extract the IP multicast address to determine that it is a multicast session.
- If the UE has a pre-configured maximum bandwidth limitation, it shall examine the b-line parameter and verify if it not exceeds the pre-configured value. If the value is exceeded, the UE shall answer with a 403 error code.

The UE shall check the if SDP parameters in the offer are acceptable (e.g., codecs), the UE shall answer with a SIP 200 OK, indicating the SDP answer as follows:

- The c-lines and m-lines shall be identical to ones indicated in the SDP offer.
- It shall include an a=recvonly attribute.
- It shall include a b-line parameter with the same value as in the offer.
- If the SDP offer includes one or more a=bc_service_package attribute the UE answer shall include the same attributes.

Koninklijke KPN NV - Exhibit 2010
Samsung Electronics America, Inc. et al. v. Koninklijke KPN NV PTAB-IPR2025-00502
Page 32 of 237

Finally, if the UE supports the SIP INFO framework, and if the SCF indicated, as well, support for the SIP INFO framework as described in the processing above, the UE shall indicate the same support. For that purpose, the UE shall include the Recv-Info header in the SIP 200 OK with a value set to 'nil'.

When the UE receives an acknowledgement, the UE shall join the multicast channel according to the multicast address.

5.1.3.2 Session modification

When there is a need for BC session modification, the UE shall generate a re-INVITE request or an UPDATE request, depending on the dialogue state, as specified in ES 283 003 [20] for an originating UE.

The UE shall include SDP offer in session modification request. When the modified session is also a broadcast session the format of the SDP shall be the same as for a session initiation.

Upon receipt of a re-INVITE request or an UPDATE request, the UE shall follow the procedures defined in ES 283 003 [20] for an originating UE.

When receiving SDP offer, the SDP answer shall reflect the media capabilities and required bandwidth as available for the BC session. The selection of the channels that are above the negotiated bandwidth may require a new session modification in accordance with the behaviour of the UE.

5.1.3.3 BC service with trick-play mode

When supporting BC service with trick play, the BC session can observe two special cases:

- The Broadcast session is modified to change from Multicast to unicast flow. This is the case in which the UE activates the trick play mode.
- The Broadcast session with trick play mode is modified to return to normal Broadcast TV. This is the case in which the UE deactivates the trick play mode by, e.g. switching channels from a paused channel to another live Broadcast TV channels.

5.1.3.3.1 Trick-play mode activation

Upon activation of trick-play mode, the UE shall perform session modification as described in clause 5.1.3.2.

The UE shall include an SDP offer with previously negotiated media descriptions with the port set to zero and two or more additional media descriptions: one for RTSP control and one or more for the unicast streams. The RTSP control media descriptor shall follow ES 283 003 [20]. The SDP offer for media delivery shall be identical to the previous SDP offer done for broadcast in term of codecs and transport protocol.

The "t=" line in the SDP offer shall include a reference timestamp for when trick mode was activated. The "t=" line shall be used by the network to calculate the h-offset that is returned in the SDP answer. By including the reference timestamp, the network can provide a more accurate h-offset independent of clock synchronizations issues. If the "t=" line in the SDP offer is set to "0 0" the h-offset shall be calculated based on the timestamp for when the re-INVITE is processed by network. The SDP answer shall include the same value as in the "t=" line as in the SDP offer. If the "t=" line in the SDP answer is set to "0 0" the UE assumes the h-offset was calculated based on network reference timestamp.

The UE shall also include the following Service Action Data:

- IPTVActionDataCommand shall be set to "SwitchToTM".
- SwitchToTM shall be set to "IPTVBcActionData".

BCServiceId shall present only if the UE has not informed the SCF of the selected channel prior to this procedure (as defined in clause 5.1.3.5) and set to the value of the current channel.

When the UE acknowledges the SIP 200 OK with an ACK message, the UE may start playback (see clause 7).

5.1.3.3.2 Trick-play mode deactivation

Upon deactivation of trick-play mode, the UE shall perform session modification as described in clause 5.1.3.2.

Koninklijke KPN NV - Exhibit 2010
Samsung Electronics America, Inc. et al. v. Koninklijke KPN NV PTAB-IPR2025-00502
Page 33 of 237

The UE shall include an SDP offer with previously negotiated RTSP and unicast media descriptions with the port set to zero. The SDP corresponding to the broadcast session shall be reactivated (i.e. port not set to zero). The "t=" line in the SDP offer shall be set to "0 0".

The UE shall also include the following Service Action Data:

- IPTVActionDataCommand shall be set to "SwitchToBC".
- SwitchToBC shall be set to "IPTVBcActionData".
- BCServiceId is set to the value of the selected channel.

The UE deactivates trick-play mode when it receives an indication from the network that it has caught up with the live BC service.

The UE shall go back to normal BC session if it does not receive any delivery data anymore and has not paused playback.

5.1.3.4 Session termination

Upon a request for a BC session termination, the UE shall generate a BYE request as specified in ES 283 003 [20] for an originating UE.

Upon receipt of a BYE request the UE shall follow the procedure specified in ES 283 003 [20] for an originating UE.

5.1.3.5 Session Information

During the procedures for join multicast group (clause 8.1.1) the UE may inform SCF of the selected channel.

If both the UE and the SCF support the INFO Framework and the UE was not authorized by the SCF during the session initiation setup to send information of the selected channel, then the UE shall not report the selected channel.

If both the UE and the SCF support the INFO Framework and the UE was authorized by the SCF during the session initiation setup to send information of the selected channel, then the UE shall proceed as described below.

To that effect, the UE shall reset a delay timer after successfully viewing a new channel using the procedure for joining multicast group (clause 8.1.1). The delay timer is a preconfigured value in the UE with a default value of 10 seconds. When the delay timer expires, the network shall be informed of the currently viewed channel with a SIP INFO message including the appropriate info package.

NOTE: A formal definition of the INFO package for reporting the selected BC channel is out scope of the current release.

- The SIP INFO message based on the SIP INFO framework draft as defined in [draft-ietf-sipcore-info-events-08] shall be sent by the UE on the same dialogue as the Broadcast TV session initiation and shall contain an info package that is based on XML file schema that includes the channel change information. The service action data: the matching "BC Bookmarks" object shall be created so that:
  - IPTVActionDataCommand shall be set to "Notify".
  - Notify shall be set to "IPTVBcActionData".
  - BCServiceId is set to the value of the current channel.
  - ProgrammeId is optionally set to the value of the current programme.
- Bookmark is set to the current timestamp if the UE has the knowledge of such timestamp (e.g. through SNTP). If the UE is not aware of such current timestamp, Bookmark is set to a default value: "NOW".

The Content-Type header shall be set to "application/vnd.etsi.iptvcommand +xml". The body content of the message is described in annex D.

The Content-Type header shall be set to "application/vnd.etsi.iptvcommand +xml". The XML schema is described in annex D.

Koninklijke KPN NV - Exhibit 2010
Samsung Electronics America, Inc. et al. v. Koninklijke KPN NV PTAB-IPR2025-00502
Page 34 of 237

If the UE does not support the INFO Framework, the UE may inform the SCF of the selectd channel.
To that effect, the UE shall reset a delay timer after successfully viewing a new channel using the procedure for joining multicast group (clause 8.1.1). The delay timer is a preconfigured value in the UE with a default value of 10 seconds. When the delay timer expires, the network shall be informed of the currently viewed channel with a SIP INFO message.

- The SIP INFO message shall be sent by the UE on the same dialogue as the Broadcast TV
- session initiation and shall contain an XML schema with the channel change information. The message body carries the service action data: the matching "BC Bookmarks" object shall be created so that:
  - IPTVActionDataCommand shall be set to "Notify".
  - Notify shall be set to "IPTVBcActionData".
  - BCServiceId is set to the value of the current channel.
  - ProgrammeId is optionally set to the value of the current programme.
- Bookmark is set to the current timestamp if the UE has the knowledge of such timestamp (e.g. through SNTP). If the UE is not aware of such current timestamp, Bookmark is set to a default value: "NOW".

The Content-Type header shall be set to "application/vnd.etsi.iptvcommand +xml". The body content of the message is described in annex D.

5.1.3.6 Procedure for PPV service

5.1.3.6.1 PPV Session initiation

The PPV may use session initiation of BC as described in clause 5.1.3.1, with the following differences:

The Request-URI in the INVITE request shall be the well known PSI (Public Service Identifier) of the BC Service which the PPV service belongs to.

The differences in the SDP offer at media level:

- The m-line(s) shall be set according to the mapping defined in clause L.2 for the BC Service which the PPV service belongs to.
- The c-line(s) shall be set according to the mapping defined in clause L.2 for the BC Service which the PPV service belongs to.
- An a=bc_service:BCServiceId line to indicate the BC service which the PPV service belongs to.
- An a=bc_program:BCprogramId line to indicate the BC program which the PPV service is, and shall be set according to the mapping defined in clause L.2.2A.

5.1.3.6.2 PPV Session termination

When the PPV program ends or UE wants to terminate the session, the UE shall generate a BYE request as specified in ES 283 003 [20] for an originating UE, which is similar with BC session termination as described in clause 5.1.3.4.

Upon receipt of a BYE request, the UE shall follow the procedure specified in ES 283 003 [20] for an originating UE, which is similar with BC session termination as described in clause 5.1.3.4.

5.1.4 Procedure for CoD service

5.1.4.1 Procedure for retrieving missing parameters before session initiation

In case of procedure for establishing the content control and content delivery at the same time see clause 5.1.4.2.1. If the UE does not have all transport parameters (RTP or UDP transport for MPEG2TS encapsulation or direct RTP, FEC layers addresses and ports) the UE shall send a SIP OPTIONS message,

Koninklijke KPN NV - Exhibit 2010
Samsung Electronics America, Inc. et al. v. Koninklijke KPN NV PTAB-IPR2025-00502
Page 35 of 237

NOTE: It is an operator choice to provide preconfigured transport parameters values, manual configuration mechanisms, etc., if the transport information is not retrieved from the SSF.

The "Request-URI" is related to the CoD session that the user wants to activate. The Request-URI shall be composed of a user and domain part as defined as follows:

- The user part contains the content identifier in a free string format, as defined in TS 182 027 [2].
- The domain part is the Service Provider domain name, obtained from SSF.

The content identifier shall be retrieved from service selection information (cf. annex L concerning the mapping between service selection information and SIP/SDP parameters).

The TO header shall contain the same URI as in the "Request-URI" parameter.

The FROM header shall indicate the public user identity of the user.

Upon reception of the SIP 200 OK including SDP, the UE shall initiate COD session as described in clause 5.1.4.2.

5.1.4.2 UE-initiated session initiation

The UE shall support the procedures specified in ES 283 003 [20] for originating sessions.

Upon a request for a COD session initiation, the UE shall generate an initial INVITE request as specified in ES 283 003 [20] for an originating UE.

The "Request-URI" is related to the CoD session that the user wants to activate. The Request-URI shall be composed of a user and domain part as defined as follows:

- The user part contains the content identifier in a free string format, as defined in TS 182 027 [2].
- The domain part is the Service Provider domain name, obtained from SSF.

The content identifier shall be retrieved from service selection information (cf. annex L concerning the mapping between service selection information and SIP/SDP parameters).

The TO header shall contain the same URI as in the "Request-URI" parameter.

The FROM header shall indicate the public user identity of the user.

5.1.4.2.1 Procedure for establishing the RTSP content control and content delivery channel

5.1.4.2.1.1 UE as SDP offerer

An SDP Offer shall be included in the initial INVITE request. The SDP offer shall be done in accordance with media capabilities and policies available for the CoD session and with the parameters received from the SSF during UE service selection procedure (cf. annex L concerning the mapping between service selection information and SIP/SDP parameters) or from the SIP OPTIONS response.

The SDP offer from the UE shall contain a media description for the RTSP content control channel and one for the content delivery channel.

SDP session level parameters shall be used as specified in ES 283 003 [20].

The RTSP content control media description shall be carried by TCP and follow ES 283 003 [20]. The SDP parameters for the RTSP content control channel shall be set as follows:

- a "m" line for an RTSP stream of format: m=<media> <port> <transport> <fmt>:
  - The media field shall have a value of "application".
  - The port field shall be set to a value of 9, which is the discard port.
  - The transport field shall be set to TCP or TCP/TLS. The former is used when RTSP runs directly on top of TCP and the latter is used when RTSP runs on top of TLS, which in turn runs on top of TCP.

Koninklijke KPN NV - Exhibit 2010
Samsung Electronics America, Inc. et al. v. Koninklijke KPN NV PTAB-IPR2025-00502
Page 36 of 237

- The fmt parameter shall be included and shall be set to *iptv_rtsp* (ex. `m=application 9 tcp iptv_rtsp`).

- An "a=setup" attribute shall be present and set to "active" as defined in ES 283 003 [20] (ex. `a=setup:active`).

- An "a= connection" attribute shall be present and set as "new" as defined in ES 283 003 [20] (ex. `a=connection:new`).

- A "c" line shall include the network type with the value set to IN, the address type set to IP4 or IP6 and IP address of the flow of the related RTSP content control (ex. `c=IN IP4 <IP_ADDRESS>`).

NOTE: RTSP over UDP is out of scope of the present document.

For each media stream controlled by the RTSP content control channel the SDP offer shall include a content delivery channel media description set as follows:

- The "m=" line indicates the type of the media, the transport protocol and the port of the related content delivery channel. It may also include a fmt parameter which shall indicate the format given by the SSF, a subset of them or the format offered by the UE if none is given by the SSF.

- The "c=" line shall include the network type with the value set to IN, the address type set to IP4 or IP6 and unicast address of the flow of the related content delivery channel, `(ex. c=IN IP4 <IP_ADDRESS>).`

- The "b=" line shall contain the proposed bandwidth. If the user has fetched the bandwidth required for this particular content delivery channel during service selection procedure, the bandwidth attribute at media level shall be set to this value. Otherwise, this attribute shall be set to a pre-configured value `(ex. b=AS:15000).`

- An "a=" line with a "recvonly" (ex. `a=recvonly`).

Additionally, FEC streams may be defined, as described in clause 5.1.4.2.3.

When receiving any SIP response, the UE shall examine the media parameters in the received SDP: the UE shall fetch the RTSP session ID from the "fmtp:iptv_rtsp h-session" attribute if present in the received SDP answer contained in the SIP response. This RTSP session ID shall be used for in RTSP media control messages and the UE shall subsequently use RTSP Method 1 for CoD playback control as described in clause 7.1.1. If fmtp:iptv_rtsp h-offset is specified in the SDP from MCF, the UE may use this as appropriate in subsequent RTSP media control messages.

If no "fmtp:iptv_rtsp h-session" parameter was received in the SDP answer, the UE shall use RTSP method 2 for CoD playback control as described in clause 7.1.2.

5.1.4.2.2 Procedure for establishing the RTSP channel separately

5.1.4.2.2.1 UE as SDP offerer

The INVITE request shall contain an SDP offer of media description only for the RTSP channel.

The SDP session level parameters shall be used as specified in ES 283 003 [20].

The SDP parameters for the RTSP channel shall be set as follows:

- A "m" line for an RTSP stream of format: m=<media> <port> <transport> <fmt>.
  - The media field shall have a value of "application".
  - The port field shall be set to a value of 9, which is the discard port.
  - The transport field shall be set to TCP or TCP/TLS. The former is used when RTSP runs directly on top of TCP and the latter is used when RTSP runs on top of TLS, which in turn runs on top of TCP.

Koninklijke KPN NV - Exhibit 2010
Samsung Electronics America, Inc. et al. v. Koninklijke KPN NV PTAB-IPR2025-00502
Page 37 of 237

- The fmt parameter shall be set to iptv_rtsp.

- An "a=setup" attribute shall be present and set to "active" as defined in ES 283 003 [20].
- An "a= connection" attribute shall be present and set as "new" as defined in ES 283 003 [20].

NOTE: RTSP over UDP is out of scope of the present document.

5.1.4.2A SCF-initiated session initiation

The UE shall support the procedures specified in ES 283 003 [20] for terminating sessions.

Upon receipt of SIP INVITE request, the UE shall check the P-Asserted-Identity header for a well known PSI of the CoD service.

If the UE does not already have all transport parameters to compose an SDP offer, the UE shall use SIP OPTIONS to retrieve missing parameters (e.g., RTP or UDP transport for MPEG2TS encapsulation or direct RTP, bandwidth, FEC layers addresses and ports).

An SDP offer shall be included in the SIP 200 OK. The SDP offer shall be done in accordance with media capabilities and policies available for the CoD session and with the parameters received from the SSF during UE service selection procedure (cf. Annex L concerning the mapping between service selection information and SIP/SDP parameters).

The SDP offer from the UE shall contain a media description for

- either the RTSP content control channel as described in clause 5.1.4.2.2
- or for the RTSP content control channel and one for the content delivery channel as described in clause 5.1.4.2.1.

SDP session level parameters shall be used as specified in ES 283 003 [20].

When the UE receives the ACK, the UE shall examine the media parameters in the received SDP: the UE shall fetch the RTSP session ID from the "fmtp:iptv_rtsp h-session" attribute if present in the received in the SDP answer contained in the ACK. This RTSP session ID shall be used for in RTSP media control messages and the UE shall subsequently use RTSP Method 1 for CoD playback control as described in clause 7.1.1. If fmtp:iptv_rtsp h-offset is specified in the SDP answer contained in the ACK, the UE may use this as appropriate in subsequent RTSP media control messages.

If no "fmtp:iptv_rtsp h-session" parameter was received in the SDP answer, the UE shall use RTSP method 2 for CoD playback control as described in clause 7.1.2.

5.1.4.2.3 Additional SDP lines for FEC streams

When the UE decides to connect to FEC stream(s) associated to the COD original stream, it shall include additional SDP lines in the SDP offer as follows:

- One or more m-line(s) for each FEC stream exposed through the SSF:
  - It shall be set according to the mapping defined in clause L.3.
  - It shall contain a c-line according to the mapping defined in clause L.3.

If the COD content is defined through a single m-line, a grouping line may be included.

If the COD content is defined through several m-lines, grouping line(s) shall be included, one for each COD m-line that is associated to a FEC stream.

- a=group:FEC:<original stream id> <FEC stream id>
  The present document supports only the DVB-IP AL-FEC Base layer, so there can be only one <FEC stream id> associated to an original stream:
  - The original stream id shall reflect the value held by the media description of one stream in its a=mid attribute.

Koninklijke KPN NV - Exhibit 2010
Samsung Electronics America, Inc. et al. v. Koninklijke KPN NV PTAB-IPR2025-00502
Page 38 of 237

- The FEC stream id shall reflect the value held by the media description of the DVB-IP AL-FEC Base layer FEC stream (associated to the original stream) in its a=mid attribute.

Furthermore, when grouping line is included, there shall be an additional media identification attribute within the m-line of the original stream that is within the grouping:

- a=mid:<original stream id>.

5.1.4.3 Session modification

In order to modify the session from the UE side, the UE shall send a re-INVITE or an UPDATE request as specified in ES 283 003 [20] for an originating UE.

The UE shall not modify RTSP channel m-line description in the SDP if the media delivery streams controlled by RTSP are not removed (port not set to zero in m-lines) in the SDP.

Upon receipt of a re-INVITE request or an UPDATE request, the UE shall modify the session as specified in ES 283 003 [20] if the request is acceptable to the UE.

5.1.4.3.1 Procedure for establishing the content delivery channel

5.1.4.3.1.1 UE as SDP offerer

The UE shall send a re-INVITE or an UPDATE request containing SDP offer after acquiring the network parameters via RTSP DESCRIBE as specified in clause 7.1.2.2 in order to establish the content delivery channels. The media descriptions of content delivery channels shall be populated as follows:

- Media descriptions acquired by DESCRIBE response are appended after the media description of RTSP channel.
- The port number in "m=" line shall be replaced by the real receiving port of the UE.
- "a=recvonly" attribute shall be inserted if the attribute is not specified.
- Remove "a=" lines specific to RTSP (a=control, a=range, and a=etag).
- If "c=" lines are specified in media descriptions, the addresses of "c=" lines shall be replaced by the address of the UE.

The SDP parameters for the RTSP channel shall be set to the same parameters as specified in clause 5.1.4.2.2.1 except for the "a=connection" attribution. The attribution shall be set to "existing" as defined in ES 283 003 [20].

The SDP offer shall include one or more media description sets as follows:

- The "m=" line indicates the type of the media, the transport protocol and the port on which the UE has to received the flows of the related content delivery channel. It may also include a fmt parameter which shall indicate the format given by the network parameters.
- The "c=" line shall include the network type with the value set to IN, the address type set to IP4 or IP6, and unicast address of the flow of the related content delivery channel. These values are given by the network parameters.
- The "b=" line shall contain the bandwidth. The bandwidth attribute shall be set to this value given by the network parameters.
- An "a=" line with a "recvonly".

Additionally, FEC streams may be defined, as described in clause 5.1.4.3.2.

5.1.4.3.2 Additional SDP lines for FEC streams

When the UE decides to connect to FEC stream(s) associated to the COD original stream, it shall include additional SDP lines in the SDP offer as follows:

Koninklijke KPN NV - Exhibit 2010
Samsung Electronics America, Inc. et al. v. Koninklijke KPN NV PTAB-IPR2025-00502
Page 39 of 237

- One or more m-line(s) for each FEC stream exposed through the SSF:
  - It shall be set according to the mapping defined in clause L.3.
  - It shall contain a c-line according to the mapping defined in clause L.3.
- If the COD content is defined through a single m-line, a grouping line may be included.

If the COD content is defined through several m-lines, grouping line(s) shall be included, one for each COD m-line that is associated to a FEC stream.

The grouping line uses the "FEC" semantic as defined in RFC 4756 [25]:

- a=group:FEC:<original stream id> <FEC stream id>.
  The present document supports only the DVB-IP AL-FEC Base layer, so there can be only one <FEC stream id> associated to an original stream:
  - The original stream id shall reflect the value held by the media description of one stream in its a=mid attribute.
  - The FEC stream id shall reflect the value held by the media description of the DVB-IP AL-FEC Base layer FEC stream (associated to the original stream) in its a=mid attribute.

Furthermore, when grouping line is included, there shall be an additional media identification attribute within the m-line of the original stream that is within the grouping:

- a=mid:<original stream id>.

5.1.4.4 Session termination

The session termination will differ when using RTSP "Method 1" or RTSP "Method 2" as described in clauses 5.1.4.4.1 and 5.1.4.4.2. The different RTSP methods are described in clause 7 and annex Q.

5.1.4.4.1 Session termination using RTSP Method 1

In order to terminate the session, the UE shall first close the RTSP session that was established during session initiation by closing the underlying TCP connection and then send a BYE request as specified in ES 283 003 [20].

Upon receipt of a BYE request, the UE shall then terminate the session as specified in ES 283 003 [20].

5.1.4.4.2 Session termination using RTSP Method 2

In order to terminate the session, the UE shall send a BYE request as specified in ES 283 003 [20]. The media teardown procedures using RTSP TEARDOWN as described in clause 7.1.2.6 shall be executed before the BYE is sent out. This would ensure that the BYE request does not close the RTSP content control channel ports at transport layer before RTSP TEARDOWN is sent.

Upon receipt of a BYE request, the UE shall send a TEARDOWN request to terminate the RTSP session if non-persistent RTSP connection is used or if the TCP connection is open. The UE shall then send a SIP 200 OK response to the BYE request as specified in ES 283 003 [20].

NOTE: The UE may not be able to send TEARDOWN or receive a response for TEARDOWN when the resource in the network for RTSP session has been released when of receiving SIP BYE.

5.1.4.5 Procedures for handling COD Service action data

When a user requests to stop viewing a CoD with the intention of resuming it later, i.e. to ‘park’ the CoD stream (bookmark it to allow it be resumed later) and to tear down the session, the UE should send a SIP INFO request to the SCF. The content of that INFO request shall be as follows:

- The value of the Request-URI shall be set to the one used in the related session.
- From and To headers shall be set to the one defined during the session initiation procedure.

Koninklijke KPN NV - Exhibit 2010
Samsung Electronics America, Inc. et al. v. Koninklijke KPN NV PTAB-IPR2025-00502
Page 40 of 237

- Call-ID shall be set to the same value as that of the CoD session.
- CSeq shall be generated by UE following rules defined in ES 283 003 [20] for request within a dialog.
- The Content-type header shall include the registered MIME type of XML documents representing IPTV service action data: "application/vnd.etsi.iptvcommand+xml".
- The message body carries the service action data:
  - IPTVActionDataCommand shall be set to "Notify".
  - Notify shall be set to "IPTVCodActionData".
  - The matching "Available CoD" object shall be updated so that CoDDeliveryStatus is set to "Parked" and CoDOffset is set to the current reading cursor of the content.

NOTE: The XML schema mapping to the MIME type: "application/vnd.etsi.iptvsad-cod+xml" is available in annex K of the present document.

When a user is making a request that allows for some type of content insertion, i.e. without tearing down the session, the UE should send a SIP INFO request to the SCF. This may be during the pausing of content, to allow some other content to be played during the pause. The content of that INFO request shall be as follows:

- The value of the Request-URI shall be set to the one used in the related session.
- From and To headers shall be set to the one defined during the session initiation procedure.
- Call-ID shall be set to the same value as that of the CoD session.
- CSeq shall be generated by UE following rules defined in ES 283 003 [20] for request within a dialog.
- The Content-type header shall include the registered MIME type of XML documents representing IPTV service action data: "application/vnd.etsi.iptvcommand+xml".
- The message body carries the service action data:

  1) IPTVActionDataCommand shall be set to "Notify".
  2) Notify shall be set to "IPTVCodActionData".
  3) The matching "Available CoD" object shall be updated so that CoDDeliveryStatus is set to "Paused", the expected duration is set to its value and CoDOffset is set to the current reading cursor of the content.

NOTE: How to determine expected pause duration is up to the implementor of the UE.

NOTE: The XML schema mapping to the MIME type: "application/vnd.etsi.iptvsad-cod+xml" is available in annex K of the present document.

NOTE: Content insertion may still be performed on the UE and/or MF side, regardless of this procedure being used.

5.1.5 Procedure for Service Configuration

The UE uses the XCAP to manage the IPTV user profile (see clause 6.1.2). In order to keep the IPTV User Profile data synchronized with the network elements and other terminals that the user might be using, the UE should subscribe from the SCF to changes in the XCAP IPTV documents.

NOTE: Changes may result from XCAP manipulation and/or operator's action.

5.1.5.1 Subscription to notification of changes

If subscription to notification of changes is used, the UE shall generate a SUBSCRIBE request in accordance with reference [26] and reference [15].

The contents of the SUBSCRIBE request shall be as follows:

Koninklijke KPN NV - Exhibit 2010
Samsung Electronics America, Inc. et al. v. Koninklijke KPN NV PTAB-IPR2025-00502
Page 41 of 237

- The value of the Request-URI shall be set to the IMS public user identity associated to the profile or to a pre-configured value or to a value received from the CNGCF.
- The From header shall be set to the IMS public user identity associated to the profile.
- The To header shall be set to a URI that identifies the IPTV service provider (e.g. PSI).
- The Accept header shall include the following values:
  - application/xcap-diff+xml.
- The Event header shall be set to the "xcap-diff" event package.

Upon receipt of a 2xx response to the SUBSCRIBE request, the UE shall store the information for the established dialog and the expiration time as indicated in the Expires header of the received response.

The UE shall automatically refresh the subscription, either 600 seconds before the expiration time if the initial subscription was for greater than 1 200 seconds, or when half of the time has expired if the initial subscription was for 1 200 seconds or less. If a SUBSCRIBE request to refresh a subscription fails with a non-481 response, the UE shall still consider the original subscription valid for the duration of the most recently known "Expires" value according to ES 283 003 [20]. Otherwise, the UE shall consider the subscription invalid and start a new initial subscription according to ES 283 003 [20].

5.1.5.2 Processing of notifications

Upon receipt of a NOTIFY request on the dialog which was generated during subscription, the UE shall look for a message body with a content-type header indicating "application/xcap-diff+xml" stores its contents for further processing and return a SIP 200 OK response to the NOTIFY request.

5.1.6 Procedure for IPTV presence service

If presence service is used, the UE shall implement the role of a PUA as specified in ES 283 030 [21].

Publication of IPTV specific information in presence document depends on user-configurable data stored in the user equipment.

Depending on the user configuration, the UE may send a SIP PUBLISH request in the following case:

- On receipt of a final SIP 200 OK concerning a BC session initiation procedure.
- On receipt of a final SIP 200 OK concerning CoD session initiation procedure.
- On receipt of a final SIP 200 OK concerning N-PVR content session initiation procedure.
- On receipt of a final SIP 200 OK concerning an IPTV session teardown procedure.

During a BC session, the UE may also send a PUBLISH request after having performed a channel-change (i.e. sending IGMP or MLD request for a particular BC service) or after the timer Tcc associated to the channel change has elapsed if this timer is activated as described in annex M.

NOTE: In order to decrease the data size and reduce the redundancy of IPTV service access history data, it is recommended that UE send the PUBLSIH request based on the user's request or based on local policy, e.g. send service information every 10 minutes or under the user's indication to send out the request, which is out scope of this specification.

When activated, the timer Tcc is triggered at every channel-change.

The content of the PUBLISH request shall be as follows:

- The Request-URI of the To and From headers shall be set to the public user identity of the user.
- The Event header shall be set to the "presence" event package.
- The content type shall be set to "application/pidf +xml".

Koninklijke KPN NV - Exhibit 2010
Samsung Electronics America, Inc. et al. v. Koninklijke KPN NV PTAB-IPR2025-00502
Page 42 of 237

The presence XML document included in the PUBLISH body shall conform to ES 283 030 [21].

The "Entity" element shall be present and set to the public user identity of the user.

The "Activity" element shall be present and set to "TV".

Additional IPTV presence elements are defined in annex E and may be included in the presence documents published by the UE:

- The "BCServicePresence" element is part of the "tuple" component according to the presence data model. It is composed of:
  - "CurrentBCServiceID" element: it indicates the currently activated BC service.
  - "CurrentBCProgramID" element: it indicates the currently watched program.
- The "CoDServicePresence" element is part of the "tuple" component according to the presence data model. It is composed of:
  - "CurrentCoDContentID" element: it indicates the currently watched CoD content.
- The "NPVRServicePresence" element is part of the "tuple" component according to the presence data model. It is composed of:
  - "CurrentNPVRContentID" element: it indicates the currently watched N-PVR content.
- The "ServiceAccessHistoryPresence" element is part of the "tuple" component and the "ServiceAccessHistoryID" element is the 'id' attribute according to the presence data model. It is composed of:
  - "ServiceType" element: it indicates the service type of the watched IPTV service.
  - "ReferencedContentID" element: it identifies the associated content in the context of specific ServiceType.
  - "Rating" element: it indicates the user rating for the referenced content.
  - "AccessStartTime" element: it indicates the time accessing the IPTV service.
  - "AccessEndTime" element: it indicates the time when the access of the IPTV service is ended
  - "HistoryExpireTime" element: it indicates the expiring time of the IPTV service access history item.
- The "ServiceStateDataPresence" element is part of the "tuple" component and the "ServiceStateDataID" element is the 'id' attribute according to the presence data model. It is composed of:
  - Zero or more "IPTVServiceState" elements, which identify the services that the SSC is composed of. The "IPTVServiceState" element is composed of
    - "ServiceType" element: it indicates the service type of the watched IPTV service.
    - "ReferencedContentID" element: it identifies the associated content in the context of specific ServiceType.
    - "ServiceState" element: it contains service state information that can be enumerated, e.g. trick play status or – commands.
    - "ServiceStateInformation " element: it contains additional service state information, e.g. state (transition) history.
    - "ServiceStateExpiryTime " element: it indicates the expiry time of the IPTV Service State. The default value of ServiceStateExpiryTime indicates that it expires when the associated ongoing service is terminated.

    If the ServiceType element has the value "BC", then the following element is applicable.

    - "TrickPlayActivated" element: it indicates whether BC trickplay is activated.

Koninklijke KPN NV - Exhibit 2010
Samsung Electronics America, Inc. et al. v. Koninklijke KPN NV PTAB-IPR2025-00502
Page 43 of 237

If the IPTVServiceTypeIdentifier has the value "SSC", then the following elements are applicable.

- "SSCRoomID" element: it identifies the SSC Room for Shared Service Control.
- "IPTVServiceState" element: it identifies the services that the SSC is composed of. The "IPTVServiceState" element is described above.

If the IPTVServiceTypeIdentifier has the value "PSC", then the following elements are applicable.

- "PSCid" element: it identifies a specific PSC service for Personalised Service Composition.
- "IPTVServiceState" element(s), which identify the services that the PSC is composed of. The "IPTVServiceState" element is described above.

NOTE: The data model for SSC - and PSC Service State follows the so-called "composite design pattern". The individual BC and CoD Service States have their own ServiceState and ServiceStateInformation attributes, which are associated in the combined SSC – or PSC Service State.

NOTE: The collection of Service State Data (from UE, network elements, external applications and/or other) is outside the scope of this specification.

NOTE: The availability of Service State Data is optional, as indicated in TS 182 027 [2].

In the XML document, each service is described thanks to the "service-description" OMA parameter as specified in OMA-TS-Presence-SIMPLE-V1 [23]. A new "service-id" is defined for this purpose with the following values IPTV-BC, IPTV-CoD, IPTV-NPVR, IPTV-SAH, IPTV-SSD.

A "class" parameter can also be added with the value "IPTV".

The activation/deactivation of this service is reported thanks to the "status parameter present in the relevant "tuple.

An example of the use of this parameter in the XML document is described in annex E.

The IPTV presence authorization rules and common policy shall be in conformance with the OMA-TS-Presence_SIMPLE_XDM-V2_0 [56], RFC 5025[55] and RFC 4745[54].

NOTE: Additional privacy and regulatory aspects affecting presence management and policy mechanisms are outside the scope of present document.

5.1.6.1 Subscribing to presence

When the UE intends to retrieve one user's IPTV presence, it shall generate a SUBSCRIBE request for the "presence" event package as specified in ES 283 030 [21].

When the UE indicates to retrieve the IPTV service access history attribute or the IPTVServiceStateData attribute of the presence, the SUBSCRIBE request shall contain a message body for defining the SAH or the SSD information as the preferred notification information to be delivered. The contents of the SUBSCRIBE request shall be as follows:

- The content Type header shall be set to "application/simple-filter+xml".
- A message body shall be present for defining the structure of the filter criteria, and the filter criteria is present as an XML document as follows:
  1) The <what> element shall be included, containing one or more <include> elements.
  2) The <include> element shall include a <type> attribute with the value of "xpath", and the value of the <include> element shall be set to "/presence/tuple/SAH" or "/presence/tuple/SSD".
  3) The <trigger> element may be included, containing one or more <changed> elements.
  4) The <changed> element may include <from> and <to> attribute, and the <changed> element may be set to "/pidf:SAH/pidf:AccessStartTime"

Koninklijke KPN NV - Exhibit 2010
Samsung Electronics America, Inc. et al. v. Koninklijke KPN NV PTAB-IPR2025-00502
Page 44 of 237

Upon receipt of a 2xx response to the SUBSCRIBE request, the UE shall store the information for the established dialog and the expiration time as indicated in the Expires header of the received response. The UE shall automatically refresh the subscription before the expiration time expires according to RFC3265.

The filter criteria complies to "Functional Description of Event Notification Filtering" [40] and "An Extensible Markup Language (XML)-Based Format for Event Notification Filtering"[41].

5.1.6.2 Receiving presence notifications

Upon receipt of a NOTIFY request on the dialog which was generated during subscription, the IPTV application within the UE shall parse the XML document contained in the message body to retrieve and display the presence information.

5.1.7 Procedure for PVR Service

5.1.7.1 Procedures for PVR Service Capture Request

The SIP MESSAGE method is used here to achieve what is described in the architectural document (TS 182 027 [2]) as "PVR content capture request". This request may be done in an impulsive way or offline.

5.1.7.1.1 Procedures for Impulsive Request

This use case is itself divided in two sub-cases:

Case 1: The user does not specify any end date and time for the recording. This can be seen as a case of "Park and pickup TV" as described in TS 182 027 [2]:

In this case the UE shall send a SIP MESSAGE request to SCF requiring Bookmark setting. The contents of the SIP MESSAGE request shall be as follows:

- The Request-URI in the MESSAGE request shall be the well known PSI (Public Service Identifier) of the BC Service.

NOTE 1: This is the same value as the Request-URI for BC service session initiation.

- From and To headers shall be set to the public identity of the user issuing the MESSAGE message.
- Call-ID shall be generated by UE.
- CSeq shall be generated by UE.
- The Content-type header shall include the registered MIME type of XML documents representing IPTV service action data: "application/vnd.etsi.iptvcommand+xml".
- The message body carries the service action data: the matching "BC Bookmarks" object shall be created so that:
  - IPTVActionDataCommand shall be set to "Record".
  - Record shall be set to "IPTVBcActionData".
  - BCServiceId is set to the value of the current channel.
  - ProgrammeId is optionally set to the value of the current programme.
  - Bookmark is set to the current timestamp if the UE has the knowledge of such timestamp (e.g. through SNTP). If the UE is not aware of such current timestamp, Bookmark is set to a default value: "NOW" which implies that the content capture is initiated as soon as the N-PVR SCF gets the request.

NOTE 2: BookmarkExpiryTime may be updated in two ways. It can be updated according to the user preference pre-set by the user, or according to the service policy defined by the service provider.

Koninklijke KPN NV - Exhibit 2010
Samsung Electronics America, Inc. et al. v. Koninklijke KPN NV PTAB-IPR2025-00502
Page 45 of 237

Case 2: The user specifies an end date and time for the recording:

In this case the UE shall send a MESSAGE request to the SCF. The contents of the SIP MESSAGE request shall be as follows:

- The user-part value of the Request-URI shall be set to the BC Service Package ID that the BC service to be recorded belongs to.
- From and To headers shall be set to the public identity of the user issuing the MESSAGE message.
- Call-ID shall be generated by UE.
- CSeq shall be generated by UE.
- The Content-type header shall include the registered MIME type of XML documents representing IPTV service action data: "application/vnd.etsi.iptvcommand+xml".
- For N-PVR, the message body carries the service action data: the matching "NPVR item" object shall be created so that:
  - IPTVActionDataCommand shall be set to "Record";
  - Record shall be set to "IPTVNpvrActionData";
  - NPVRContentId is not set;
  - BCServiceId is set to the BC Service to be recorded;
  - RecordStartDate is set to the current timestamp if the UE has the knowledge of such timestamp (e.g. thanks to SNTP). If the UE is not aware of such current timestamp, RecordStartDate should be set to a default value: "NOW" which implies that the content capture is started as soon as the NPVR SCF gets the request;
  - RecordEndDate is set to the end date/time when the recording should stop and would correspond to what the user has specified;

NOTE 3: NPVRContentExpiryTime may be updated in two ways. It can be updated according to the user preference pre-set by the user, or according to the service policy defined by the service provider.

- For C-PVR, the message body carries the service action data: the matching "CPVR item" object shall be created so that:
  - IPTVActionDataCommand shall be set to "Record";
  - Record shall be set to "IPTVCpvrActionData";
  - CPVRContentId is not set;
  - TargetUEId shall be set to the public GRUU or SIP instance ID instead of GRUU;.
  - BCServiceId is set to the BC Service to be recorded;
  - RecordStartDate is set to the current timestamp if the UE has the knowledge of such timestamp (e.g. thanks to SNTP). If the UE is not aware of such current timestamp, RecordStartDate should be set to a default value: "NOW" which implies that the content capture is started as soon as the PVR SCF gets the request;
  - RecordEndDate is set to the end date/time when the recording should stop and would correspond to what the user has specified;

5.1.7.1.2 Procedures for Offline Request

A user may request to record a live programme that has not started yet. In this case the UE shall send a SIP MESSAGE request to the SCF. The content of the SIP MESSAGE request shall be as follows:

- The user-part of the Request-URI shall be set to the BC Service Package ID that the BC service belongs to.

Koninklijke KPN NV - Exhibit 2010
Samsung Electronics America, Inc. et al. v. Koninklijke KPN NV PTAB-IPR2025-00502
Page 46 of 237

- From and To headers shall be set to the public identity of the user issuing the MESSAGE message.
- CSeq shall be generated by UE.
- The Content-type header shall include the registered MIME type of XML documents representing IPTV service action data: "application/vnd.etsi.iptvcommand+xml".
- For N-PVR, the message body carries the service action data: the matching "NPVR item" object shall be created so that:
  - IPTVActionDataCommand shall be set to "Record".
  - Record shall be set to "IPTVNpvrActionData".
  - If the recording is requested on a specific entry in the EPG:
    - NPVRContentId is set to the matching ProgrammeId.
  - If the recording do not match a specific entry in the EPG:
    - NPVRContentId is not set.
    - BCServiceId is set to the BC Service to be recorded.
    - RecordStartDate is set to the date/time when the recording has to start as specified by the user.
    - RecordEndDate is set to the date/time when the recording has to be terminated and is specified by the user.

NOTE: NPVRContentExpiryTime may be updated in two ways. It can be updated according to the user preference pre-set by the user, or according to the service policy defined by the service provider.

- For C-PVR, the message body carries the service action data: the matching "CPVR item" object shall be created so that:
  - IPTVActionDataCommand shall be set to "Record";
  - Record shall be set to "IPTVCpvrActionData";
  - If the recording is requested on a specific entry in the EPG:
    - CPVRContentId can be set to the matching ProgrammeId.
  - If the recording do not match a specific entry in the EPG:
    - CPVRContentId is not set.
    - TargetUEId shall be set to the public GRUU to the SIP instance ID instead of GRUU.
    - BCServiceId is set to the BC Service to be recorded;
    - RecordStartDate is set to the date/time when the recording has to start as specified by the user.
    - RecordEndDate is set to the date/time when the recording has to be terminated and is specified by the user.

5.1.7.2 Procedures for N-PVR Session

The UE follows procedures outlined in clause 5.1.4 for COD to stream a previously captured N-PVR content.

The user part of the "Request-URI" parameter shall contain the NPVRContentId retrieved from the SSF as defined in clause 6.1.1.5 and shall correspond to the content that was captured via impulsive or offline request.

The UE shall build the SDP offer as defined in clause 5.1.4.2 for CoD session initiation and shall include media control line for RTSP control channel. The SDP offer for the media delivery lines shall specify the transport and codec parameters for the corresponding BC ServiceId.

Koninklijke KPN NV - Exhibit 2010
Samsung Electronics America, Inc. et al. v. Koninklijke KPN NV PTAB-IPR2025-00502
Page 47 of 237

5.1.7.3 Procedures for C-PVR Recording Session

The UE shall then extract the parameters from the received MESSAGE message body and verify the "NotificationReason" is "CPVRRecord". The UE extracts further sub-elements message body of the "CPVRRecordInfo" element, as follows:

- The "CPVRContentID" element in the message body indicates the identifier of the C-PVR content, may be used as an index for user;
- The "BCServiceId" element in the message body indicates the BC service that required to be recorded, UE shall initiate a C-PVR recording session which is similar to the procedures described in clause 5.1.3.1 to join the BCServiceId immediately and record the media content. The UE shall correlate the "BCServiceId" with the one from the service selection.

The "RecordEndDate" element in the message body indicates the BC service that required to be recorded, UE shall initiate the end date (and time) of the recording, the UE shall set a timer to terminate the C-PVR recording session.

5.1.8 Procedure for UGC Service

5.1.8.1 Procedure for UGC declaration

In the case of procedure for declaring user generated content, the UE shall send a SIP MESSAGE request to SCF for retrieving UGC contentID. The contents of the SIP MESSAGE request shall be as follows:

- The Request-URI in the MESSAGE request shall be the well known PSI (Public Service Identifier) of the UGC Service.
- From and To headers shall be set to the public identity of the user issuing the MESSAGE request.
- Call-ID shall be generated by UE.
- CSeq shall be generated by UE.
- The Content-type header shall include the MIME type of XML documents representing IPTV service action data: "application/vnd.etsi.iptvsad-ugc+xml".
- The message body of MESSAGE request carries the transaction-id, which should match "UGC items" specified in annex K.

The transaction-id is used to identify a UGC declaration transaction, it is a string that is generated and only recognized by the UE, and it is carried in the declaration request from the UE and the declaration response from the SCF, and the "transaction-id" is not used in the following request response, and the "UGCContentId"can be used to correlate the request and response. The transaction-id is unique on the UE and there should be some mechanism for UE to populate the unique transaction-id. Time-stamp based transaction-id generation may be seen as an option, which is out of scope of current document.

Upon reception of the MESSAGE request from SCF including UGC contentID, the UE shall extract UGC contentID and the transaction-id from the message body. A SIP 200 OK response without message body shall be sent back to the SCF immediately after the MESSAGE request is successfully received by the UE.

The UE then uses the transaction-id to correlate the UGC declaration request and enforce the subsequent actions, e.g. save the UGC contentID in local disk. Transaction Id is only valid until the response is received.

5.1.8.2 Procedure for publishing UGC description information by UE

The procedure is similar to the procedure outlined in clause 5.1.8.1 for declaring user generated content, with the following difference:

- The message body of MESSAGE request carries both the UGC contentID and UGC description information, which should match "UGC items" specified in annex K.

This procedure may be combined with the UGC declaration procedures in clause 5.1.8.1.

Koninklijke KPN NV - Exhibit 2010
Samsung Electronics America, Inc. et al. v. Koninklijke KPN NV PTAB-IPR2025-00502
Page 48 of 237

5.1.8.3 Procedure for UGC creation

5.1.8.3.1 Session initiation

The UE shall support the procedures specified in ES 283 003 [20] for originating sessions.

Upon request for a UGC creation session initiation, the UE shall generate an initial INVITE request as specified in ES 283 003 [20] for an originating UE.

- The "Request-URI" shall be the well known PSI (Public Service Identifier) of the UGC Service.
- The From header shall indicate the public user identity of the user.
- The To header shall contain the UGC contentID generated in UGC declaration.
- Call-ID shall be generated by UE.
- CSeq shall be generated by UE.

NOTE: The UGC contentID shall be retrieved from the MESSAGE request sent from SCF in response to the UGC declaration request.

An SDP Offer shall be included in the request. The SDP Offer shall be done in accordance with the media capabilities and required bandwidth available for the UGC creating session.

The SDP Offer at media level shall include the following elements:

The "m=" line indicates the type of the media, the transport protocol and the port of the related content delivery channel.

The "c=" line shall include the network type with the value set to IN, the address type set to IP4 or IP6 and unicast address of the flow of the related content delivery channel,
(ex. c=IN IP4 <IP_ADDRESS>).

- The "b=" line shall contain the appropriate bandwidth value that the generating UE supports. Since the UGC media stream is unidirectional the bandwidth shall be set to 0, except for the case that the transport is RTSP, RTP and RTCP is allowed.
- For HTTP upload the transfer type may be indicated in the "fmtp:iptv_http_transfer" type attribute. The values that are applicable are "progressive" and "streaming".
    - The "progressive" upload is content in the UE that is fully available for upload and has no restrictions to the rate of upload.
    - The "streaming" or HTTP streaming is content in the UE that has a restricted rate of upload, for example content that is being recorded.

  Other values may be used with a "x-" extension to indicate other proprietary type of downloads.

  (ex. a=fmtp:iptv_http transfer-type＝<transfer-type>).

An "a=" line with a "sendonly" attribute
(ex. a=sendonly).

NOTE: Procedures for publishing UGC description in 5.1.8.1 and UGC declaration procedures in 5.1.8.2 may also be embedded in the above UGC creation procedures.

The UE may use the bandwidth and if present the transfer-type attributes in the SDP answer from the session initiation response to shape the rate of the content upload.

The transmission of HTTP content upload is a best effort type of transmission. The speed at which content is transmitted with HTTP is limited by the available bandwidth. No prioritization is performed on the transmission of upload. If differentiation is required for HTTP content upload the attribute "transfer-type" SHALL be supported.

The inclusion of the attribute "transfer-type" indicates to IMS and local transport policies in RACS that a session with special requirements shall be setup. For example HTTP streaming shall be set up with the bandwidth included in the SDP is the maximum guaranteed bandwidth for transmission.

Koninklijke KPN NV - Exhibit 2010
Samsung Electronics America, Inc. et al. v. Koninklijke KPN NV PTAB-IPR2025-00502
Page 49 of 237

5.1.8.4 Procedure for UGC watching session

5.1.8.4.1 UGC selection

The UE can select UGC content based on several methods

- Selection through the SSF, see clause 6.1.1
- Content recommendation
- Notification, see clause 5.1.9
- Pre-selection, see below

When a UE wants to pre-select UGC content that had already been declared and published but not yet created, it shall send a SIP MESSAGE request to the SCF. The contents of the SIP MESSAGE request shall be as follows:

- The Request-URI shall be the well known PSI (Public Service Identifier) of the UGC Service.
- From and To headers shall be set to the public identity of the user issuing the MESSAGE request.
- Call-ID shall be generated by UE.
- CSeq shall be generated by UE.
- The Content-type header shall include the MIME type of XML documents representing IPTV service action data: "application/vnd.etsi.iptvsad-ugc+xml".

NOTE: The XML schema corresponding to the MIME type "application/vnd.etsi.iptvsad-ugc+xml" is available in annex K of the present document.

- The message body contains the contentID of the UGC content the UE wants to pre-select

Upon receiving the SIP 200 OK answer from the SCF the UE stores the contentID of the pre-selected UGC.

5.1.8.4.2 Session initiation

UE-initiated: When the UE selects UGC through the SSF, content recommendation, or notification it shall perform UE-initiated session initiation as described in clause 5.1.4.2 for CoD.

SCF-initiated: Upon receiving an incoming INVITE the UE shall inspect the From header. If the From header includes contentID which corresponds to the stored contented of pre-selected content, the UE shall accept the SCF-initiated session initiation as described in clause 5.1.4.2A for CoD.

5.1.9 Notification service

5.1.9.1 Procedure for Notification service using signalling path

Upon reception of a SIP MESSAGE request, the UE shall check the Content-type header indicating "application/vnd.etsi.iptvnotification+xml" to verify the notification message. The UE shall parse the XML document defined in Annex S.

After all elements have been processed, the UE may present the received notification to the user and take the appropriate further actions.

5.1.10 Procedure for Remote Service Initiation

5.1.10.1 Procedure for service initiation by remote UE

When the Remote UE wants to initiate an IPTV service on the Target UE, the Remote UE shall send a SIP REFER request to Target UE, and the REFER message is routed to SCF by IFC. The contents of the SIP REFER request shall be as follows:

Koninklijke KPN NV - Exhibit 2010
Samsung Electronics America, Inc. et al. v. Koninklijke KPN NV PTAB-IPR2025-00502
Page 50 of 237

- The Request-URI in the REFER request shall be set to the public GRUU or to the registered IMPU of the Target UE with the Accept-Contact header set to the SIP instance feature tag defined in section 5.6.3 of the Target UE;
- From header should be set to the public identity of the user issuing the REFER request;
- To header should be set to the public GRUU or the IMPU of the Target UE;
- Call-ID shall be generated by the Remote UE;
- CSeq shall be generated by Remote UE;
- Refer-To shall include the following parameters:
  - the SIP URI should be set to the PSI of the service to be activated on the Target UE;
  - the "method" shall be set to appropriate values according to different service, such as "INVITE" for BC, Cod; "MESSAGE" for UGC.

When the Remote UE receive the NOTIFY message, the remote UE should send a SIP 200 OK to the originating UE.

5.1.10.2 Procedure for service initiation on the Target UE

When receiving a SIP REFER request, the Target UE shall check whether or not it is capable of initiating the indicated IPTV session, e.g. Refer-To header to extract the Request-URI should start service request as the "Refer-To" message header of the REFER.

If the Target UE is capable of initiating the service, the Target UE shall send a SIP 200 OK Message immediately. And the SIP 200 OK Message should be the same to the REFER request received before except the "contact" head field:

- Contact shall be set to the GRUU of the Target UE;

Then the Target UE should send an immediate NOTIFY message to remote UE for informing the agent sending the REFER of the status of the reference which shall be set as follows:

- From header shall be set to the public GRUU of the Target UE;
- To header shall be set to public identity of the user issuing the REFER request;
- Call-ID shall be same to the REFER message received before;
- CSeq shall be same to the REFER message received before;
- Content-Type shall be set to "message/sipfrag";
- Event shall be set to "refer";
- Subscription-State shall be set to "active";

When the Target UE have sent the NOTIFY message, it should initiate the service according to the "Refer-To" message header of the REFER. After completion of the service initiation, it should send another NOTIFY message to remote UE, and the "Subscription-State" of such NOTIFY message should be set to "terminated" which is different from previous NOTIFY message.

5.1.11 Procedure for Personalised Service Composition

5.1.11.1 General

The Personalised Service Composition (PSC) service composes multiple BC and or CoD sessions into a PSC session. The PSCid is used to correlate the different BC/CoD sessions of the PSC, associating these BC/CoD sessions with each other within the PSC session, which is identified by the PSCid.

Koninklijke KPN NV - Exhibit 2010
Samsung Electronics America, Inc. et al. v. Koninklijke KPN NV PTAB-IPR2025-00502
Page 51 of 237

5.1.11.2 Generation of the PSCid by the UE

The UE retrieves available services from SSF and composes a Personalized Service Composition (PSC). The PSC is to be composed of multiple BC and/or CoD services. The UE generates a PSCid and makes a record of it. The PSCid should be globally unique.

5.1.11.3 UE-initiated session initiation

For all UE-initiated sessions in the PSC, the UE shall include the PSCid in the SDP offer in the initial INVITE request to the SCF.

- An "a=PSCid:<PSCid>" line indicates the PSCid

The UE shall correlate the session with the PSCid.

UE-initiated BC session initiation is specified in clause 5.1.3.1. UE-initiated CoD session initiation is specified in clause 5.1.4.2. Other types of IPTV sessions may also be used in a PSC, including an "empty" session that is used only to convey the PSCid.

5.1.11.4 SCF-initiated session initiation

A UE is able to receive an initial invite request from the SCF following the SCF-initiated session initiation procedures specified in clauses 5.1.3.1A and 5.1.4.2A.

When a UE receives an initial INVITE request from the SCF containing a PSCid, it shall check whether it already has a record of the indicated PSCid.

- If it does, then the UE shall correlate the session with the PSCid.
- If it does not, then the UE shall make a record of the PSCid and correlate the session with the PSCid.

5.1.11.5 Session modification

Sessions within a PSC can be modified using normal session modification procedures, see e.g. clause 5.1.3.2. For UE-initiated modification of a session within a PSC, the UE shall include the PSCid in the SIP re-INVITE request or UPDATE request, depending on the dialogue state.

- An "a=PSCid:<PSCid>" line indicates the PSCid

The value of the PSCid may be different than in the original INVITE request, which indicates that the session is transferred to another PSC. The value of the PSCid may also be empty, which indicates that the session is removed from the PSC.

For an SCF-initiated session modification, the UE shall check the PSCid in the received re-INVITE request or UPDATE request. If the PSCid is different from the original PSCid for this session, this indicates that the session is transferred to another PSC. If the value of the PSCid is empty, this indicates that the session is removed from the PSC.

5.1.11.6 Session termination

Sessions within a PSC are terminated using normal session termination procedures, see e.g. clauses 5.3.1.4 and 5.3.2.4. When a session within a PSC is terminated, then the UE shall remove the correlation between that session and the PSCid. When the last session within a PSC is terminated, then the UE shall delete the record of the PSCid.

5.1.12 Procedure for Personalized Channel (PCh) Service

5.1.12.1 Procedure for PCh Declaration

For declaring a Personalized Channel (PCh), the UE shall send a SIP MESSAGE request to SCF for retrieving PChId. The contents of the SIP MESSAGE request shall be as follows:

Koninklijke KPN NV - Exhibit 2010
Samsung Electronics America, Inc. et al. v. Koninklijke KPN NV PTAB-IPR2025-00502
Page 52 of 237

- The Request-URI in the MESSAGE request shall be the well known PSI (Public Service Identifier) of the PCh Service.
- From and To headers shall be set to the public identity of the user issuing the MESSAGE request.
- Call-ID shall be generated by UE.
- CSeq shall be generated by UE.
- The Content-type header shall include the MIME type of XML documents representing IPTV service action data: "application/vnd.etsi.iptvsad-pch+xml" (cf. Annex K).
- The message body carries one "IPTVPChActionData" element which only includes a unique "transaction-id" attribute that is generated by the UE.
- If the UE wants to avoid forking in case the user is registered with the same IMPU from several devices, the UE should include the contact header and should include there in a public GRUU, a temporary GRUU or the sip instance feature tag.

The transaction-id is used to identify a declaration transaction. It is a string that is generated and only recognized by the UE, and it is carried in the declaration request from the UE and the declaration response from the SCF, and the "transaction-id" is not used in the following request response, and the PChID can be used to correlate the request and response. The transaction-id is unique on the UE and there should be some mechanisms for UE to populate the unique transaction-id. Time-stamp based transaction-id generation may be seen as an option, which is out of scope of current document.

A SIP 200 OK response without message body shall be sent back to the SCF immediately after the MESSAGE request is successfully received by the UE.

Upon reception of the MESSAGE request from SCF including PChId, the UE shall extract PChId from the message body. Transaction Id is only valid until the response is received.

5.1.12.2 Procedure for PCh Operation

5.1.12.2.1 PCh Session Initiation

For the PCh MF option, the PCh session initiation is similar with the CoD session initiation as described in clause 5.1.4.2, with the following differences:

- The "Request-URI" in the INVITE request shall be set to the PChId generated in PCh declaration procedure;
- The To header in the INVITE request shall contain the same PChId as in the "Request-URI" parameter;

5.1.12.2.2 Session modification due to a PCh Content Item Switch

Upon receipt of a re-INVITE request or an UPDATE request, the UE shall modify the session as specified in procedure for CoD service of clause 5.1.4.

5.1.12.2.3 PCh Overlap Handling through User interaction

On reception of SIP INFO request, that includes the PCh-Overlap-Handling Info Package in accordance with the SIP INFO framework, the UE shall examine the Call-ID header and the Content-type header which is "application/vnd.etsi.iptvsad-pch-overlap+xml" to identify the PCh conflict option request.

The UE extracts the options from the message body, and selects one option according to the user choice and the UE capabilities (e.g. capability for C-PVR) .

Following successful processing of the SIP INFO request, the UE shall send back a SIP 200 OK response to the sender.

Then the UE shall send another SIP INFO request back to the SCF including the PCh-Overlap-Handling representing the choice result, as follows:

Koninklijke KPN NV - Exhibit 2010
Samsung Electronics America, Inc. et al. v. Koninklijke KPN NV PTAB-IPR2025-00502
Page 53 of 237

- The Request-URI, To header, Call-ID shall be set identical to those present in the PCh session initiation procedure;
- The CSeq shall be generated by the UE;
- The Content-type shall be set to "application/vnd.etsi.iptvsad-pch-overlap+xml" which representing the PCh conflict choice data (cf. Annex U);
- The message body shall include the selected option that handles the PCh overlap.

Note that it is assumed that both the UE and the SCF indicated their willingness to receive the PCh-Overlap-Handling Info Package.

5.1.13 Procedure for Content Insertion at UE Side

Content insertion at the UE side is a generic capability that allows for inserting content. Content insertion is triggered by user input at the UE side or event detection by the UE or SCF. Annex A.6 provides example signalling flows for the case where the SCF detects an event and for the case where a user pauses a CoD stream.

For the purpose of content insertion, the UE shall recieve a SIP INFO request including the Event-Notification Info Package according to the SIP INFO framework with Content-type set to "application/vnd.etsi.iptvnotification+xml".

The UE shall then extract the parameters from the body in the received SIP INFO request and varify the "NotificationReason" is "ContentInsertion".

Following successful processing of the SIP INFO request, the UE shall send back a SIP 200 OK response to the sender.

The UE checks the local device for the support of content insertion and extracts further sub-elements message body of the "ContentInsertionInfo" element, as follows:

- The "ContentInsertionReason" element in the message body describes the reason for ContentInsertion. The currently specified types are "Advertising", "PausedContent", "Generic".

NOTE: The UE can handle the content insertion appropriately based on the reason for the insertion. The decision logic, as well as any configuration by the network, is operator-dependent and out of scope of this specification. Additionally, the UE may reject the insertion based on criteria such as local resource availability, bandwidth availability etc.

- The "ContentInsertionTime" element contains two sub-elements:
    - The "ContentInsertionStartTime" element in the message body indicates the content start time. If it is earlier than the present clock, the UE shall ignore the SIP INFO request as if it is sent in error. If it is later than the present clock, the UE shall set up a timer to wait for the triggering of content insertion handling. If the body does not carry a "ContentInsertionStartTime" element, or the timer for the content insertion triggering is up, the UE shall perform the content insertion immediately:
    - The "ContentInsertionDuration" element in the message body indicates the duration of content insertion.
- If the message body carries a PSCid according to 5.1.11, the PSCid is associated with the ongoing BC/CoD session and it is used to associate this session with the new session for content insertion.
- If the message body carries a "MulticastContent" element, the UE shall initiate an INVITE request as described in clause 5.1.3.1, where the first BCServiceID that the UE tends to join shall be set to the one extracted from the "MulticastContent" element;
    - The SDP offer includes the PSCid according to 5.1.11.3 if available. This results in a PSC session composed of the ongoing BC/CoD session and the new multicast session for content insertion.
- If the message body carries a "UnicastContent" element, the UE shall initiate an INVITE request as described in clause 5.1.4.2, where the Request-URI in the request shall include the one extracted from the "UnicastContent" element.

Koninklijke KPN NV - Exhibit 2010
Samsung Electronics America, Inc. et al. v. Koninklijke KPN NV PTAB-IPR2025-00502
Page 54 of 237

- The SDP offer includes the PSCid according to 5.1.11.3 if available. This results in a PSC session composed of the ongoing BC/CoD session and the new unicast session for content insertion.

NOTE: Since the PSCid is known by both the UE and the SCF, it allows for specific UE and/or network behaviour in case of associated sessions within a Personalized Service Composition. For example in case of advertisement the inserted content has reduced trick-play capabilities, or for example the SCF may pre-reserve and allocate sufficent additional bandwidth for the new content insertion session.

- The SIP INVITE request initiated by the UE shall be constructed according to the procedures for BC service in section 5.1.3 for multicast content insertion and the procedures for CoD service in section 5.1.4 for unicast content insertion

After the new session has been established, the UE may use SIP INFO to update the content insertion SAD information. For example, in the cases when the content insertion is rejected , or has begun, ended, failed etc, the UE shall send SIP INFO to the SCF reporting the insertion status, with the InsertionStatus element set to "Rejected", "Started", "Finished" and "Failed" respectively. The Service Action Data information (see annex K) shall be populated as follows:

- IPTVActionDataCommand shall be set to "Notify".
- Notify shall be set to "IPTVContentInsertionActionData".
- "IPTVContentIdentifer" shall be set to the content identifier of on-going session, e.g. the BC service id, the CoD content identifier etc;
- "InsertedContentIdentifer" shall be set to the content identifier of the content that is inserted to the on-going session.
- The "InsertionStatus" element shall be present and set to "Accepted" .

The Content-Type Header of the SIP INFO message shall be set to "application/vnd.etsi.iptvcommand+xml".

Note that the UE must have indicated its willingness to receive the Event-Notification Info Package

5.1.14 Procedures for IPTV Content Marker Service

5.1.14.1 Procedure for IPTV Content Marker handling

The IPTV Content Marker handling procedure applies to storing, updating and removing IPTV Content Markers.

For storing and/or updating the IPTV Content Marker, the UE shall, within an existing SIP dialog with the SCF, send a SIP INFO request that includes the IPTV-Content-Marker Info Package according to the SIP INFO framework, or send a SIP MESSAGE request to the SCF if there is no ongoing SIP dialog with the SCF. The contents of the SIP INFO/SIP MESSAGE request shall be as follows.

- The value of the Request-URI shall be set to the one used in the related session, where applicable.
- From and To headers shall be set to the one defined during the session initiation procedure.
- Call-ID shall be set to the same value as that of the CoD session.
- CSeq shall be generated by the UE following rules defined in ES 283 003[20] for request within a dialog.

The Content-type header shall include the registered MIME type of XML documents representing IPTV Content Marker data: "application/vnd.etsi.iptvcontentmarker+xml".

- The message body carries data of IPTV Content Marker. The content of SIP INFO/SIP MESSAGE request shall be follows:
  - IPTVInformationDataCommand shall be set to "Update"
  - IPTVContentMarkerID is not set when the user wants to register IPTV Content Marker. If the user wants to update IPTV Content Marker data, IPTVContentMarkerID shall be set the value of targeted IPTV Content Marker.

Koninklijke KPN NV - Exhibit 2010
Samsung Electronics America, Inc. et al. v. Koninklijke KPN NV PTAB-IPR2025-00502
Page 55 of 237

- OwnerUserID shall be set to IMPU.
- IPTV service type identifier shall be set to the value of IPTV service type this IPTV Content Marker refers When the user updates IPTV Content Marker data, this value should not be changed.
- IPTV content identifier shall be set to the value of IPTV content identifier. When the user updates IPTV Content Marker data, this value should not be changed.
- ForbiddenViewUser is optionally set to IMPUs of specific users with whom the owner of this IPTV Content Marker does not want to share this particular IPTV Content Marker.
- StartTimeOfIPTVContentMarker is optionally set to the timestamp value the UE indicates.
- EndTimeOfIPTVContentMarker is optionally set to the timestamp value the UE indicates.
- UserComment is optionally set to string value of comment the user notes.
- GenerationTime is optinally set to the timestamp value of creating IPTV Content Marker. This value is generated by the SCF.
- ExpiryTime is optionally set to the timestamp value IPTV Content Marker expires. To delete an existing IPTV Content Marker, the UE shall set this value to -1.
- Tag: Represents any categorization chosen by the user
- Rank: Represents the user favorite rating for the content marker
- Retrieval count: SHALL be set to 0 and incremented by the service provider when the content marker is retrieved. This value is set by the SCF.
- Retrieval Time SHALL be updated with a new entry every time the content bookmark is retrieved (note that retrieval does not imply the content bookmark is used). This value is set by the SCF.

Updating and removing of content markers may also occur outside an existing session and if so than XCAP should be used for that purpose if the information is stored in the user profile.

NOTE : Ranking and tagging procedures are considered out of scope (as UE intern procedures).

5.1.15 Procedure for Targeted Ad Insertion (TAI)

5.1.15.1 TAI at UE side

In the case when service state detection happens at the SCF as described in section 5.3.14.1, the UE shall use procedure for content insertion at UE side described in clauses 5.1.13 for TAI at UE side.

The following attributes in the content insertion data are used as following:

- The "ContentInsertionStartTime" indicates the ad insertion start time, the handling of the processing of "ContentInsertionStartTime" is same with the handling of the content insertion.
- The "ContentInsertionEndTime" element indicates the ad insertion end time.
- The "MulticastContent " element, it indicates multicast ad insertion, and the "UnicastAd" element indicates unicast AD insertion, the UE shall initiate an INVITE request according to the handling of content.

The response of the request and the following session initiation of the inserted ad is the same with the procedures described in the content insertion procedures.

5.1.15.2 TAI at MF side

NOTE: There are no additional procedures needed for the TAI at MF side.

Koninklijke KPN NV - Exhibit 2010
Samsung Electronics America, Inc. et al. v. Koninklijke KPN NV PTAB-IPR2025-00502
Page 56 of 237

5.1.16 Procedures for Content Switch within a CoD Contentlist(User-Owned)

CoD content lists are lists.that are typically owned by a user and are under user control when it comes to content switching. The assumption in this case, is that all of the contents within one CoD contentlist shall share the same content delivery description information (e.g. the same QoS requirement), so that session modification procedures are not needed when users switch content within the contentlist. Note that the user is able to perform trickmodes on any content in the list.

5.1.16.1 UE-initiated session Session initiation

The session initiation is similar with the CoD session initiation as described in clause 5.1.4.2, with the following differences:

- The "Request-URI" in the INVITE request shall be set to the Content identifier fetched from the service discovery procedures;
- An "a=fmtp:3gpp_rtsp h-Supported" attribute shall be present and set as "3gpp-switch", under the "m" line for RTSP stream which is defined in Annex A of [53].

When the UE receives the SIP 200 OK response from MF, the UE shall examine that an "a=fmtp:3gpp_rtsp h-Supported" attribute is present and set as "3gpp-switch" under the "m" line for RTSP stream. The UE then extracts the contentlist information from the XML message body and stores it. The UE may present the received contentlist information, e.g. "ContentItemName" to the user and take the appropriate further actions.

NOTE: The MF represents a combination of the MCF & MDF. In this context the MCF functionality is expected to be used.

5.1.17 Procedures with other IMS Services

5.1.17.1 Instant Messaging Procedures

When the UE supports OMA Instant Messaging according to [21] the UE shall follow the following procedures.

When UE supports messaging using these procedures the SIP REGISTER Contact header shall include the OMA Instant Messaging feature tag '+g.oma.sip-im' according to [51] and an IPTV IMS Application Reference Identifier (IARI) URN media feature tag "urn:urn-xxx:3gpp-application.ims.iari.iptv-application" according to [21]. Example of the feature tag:

```
g.3gpp.iari-ref="urn%3Aurn-xxx%3A3gpp-application.ims.iari.iptv-application"
```

Upon reception of a SIP MESSAGE with an Accept-Contact header with Instant Messaging feature tag '+g.oma.sip-im' and IARI media feature tag 'urn:urn-xxx:3gpp-application.ims.iari.iptv-application' the UE shall handle the body as an IPTV related IPTV message. This allows the UE to screen regular SIP MESSAGE not coming from the SCF, e.g. in order to exhibit IPTV-specific behaviour.

The body may include information relating to IPTV (for example TV program reminder/subscription set by the user).

Note: If information related to IPTV is included in the message, this mechanism serves as an alternative to the procedure in 5.3.6; it is intended to be used if different types of IMS devices are targeted, among which non-IPTV devices.

Upon successful reception of the request the UE responds with a SIP 200 OK response.

5.1.18 Procedures for Unicast Content Download

5.1.18.1 UE-initiated Content download session initiation for unicast download

The UE shall support the procedures specified in ES 283 003 [20] for originating sessions.

Koninklijke KPN NV - Exhibit 2010
Samsung Electronics America, Inc. et al. v. Koninklijke KPN NV PTAB-IPR2025-00502
Page 57 of 237

Upon a request for a content download session initiation, the UE shall generate an initial INVITE request as specified in ES 283 003 [20] for an originating UE, and specifically:

- the Request-URI shall contain the download content URI as CDS XML unicast locator described in TS 102 034 [3] clause 10.3.2.2
- the TO header shall contain the download content URI.
- the content identifier shall be retrieved from service selection information (cf. annex L concerning the mapping between service selection information and SIP/SDP parameters).
- the FROM header shall indicate the public user identity of the user.
- an SDP Offer shall be included in the request. The SDP Offer shall be done in accordance with the media capabilities and required bandwidth available for the content download session.
- the SDP Offer at media level shall include the following elements:
  - an "m" line for an HTTP download of format: m=<media> <port> <transport> <fmt>:
    - the media field shall have a value of "application".
    - the port field shall be set to a value of 9, which is the discard port.
    - the transport field shall be set to TCP.
    - the fmt parameter shall be included and shall be set to *iptv_http* (ex. `m=application 9 tcp iptv_http`).
  - an "a=setup" attribute shall be present and set to "active" as defined in ES 283 003 [20] (ex. `a=setup:active`).
  - an "a= connection" attribute shall be present and set as "new" as defined in ES 283 003 [20] (ex. `a=connection:new`).
  - a "c" line shall include the network type with the value set to IN, the address type set to IP4 or IP6 and IP address of the flow of the related HTTP channel (ex. `c=IN IP4 <IP_ADDRESS>`).
  - Optionally, the "b=" line may contain the proposed bandwidth. If the user has fetched the bandwidth required for this particular content delivery channel during service selection procedure, the bandwidth attribute at media level shall be set to this value. `(ex. b=AS:15000).`
  - The type of content download may be indicated in the "fmtp:iptv_http transfer-type" attribute. The values that are applicable are "progressive" and "streaming".

    - The "progressive" download is content that is viewed as download is stored or buffered in the UE.

    - The "streaming" or HTTP streaming is content that is viewed without storing or very limited buffering in the UE similar to RTSP streaming.

    Other values may be used with a "x-" extension to indicated other proprietary type of downloads. (ex. a=fmtp:iptv_http transfer-type＝<transfer-type>).

The transmission of HTTP content download is a best effort type of transmission. The speed at which content is transmitted with HTTP is limited by the available bandwidth. No prioritization is performed on the transmission of download. If differentiation is required for HTTP download the attribute "transfer-type" SHALL be supported.

The inclusion of the attribute "transfer-type" indicates to IMS and local transport policies in RACS that a session with special requirements shall be setup. For example HTTP streaming shall be set up with the bandwidth included in the SDP is the maximum guaranteed bandwidth for transmission.

Koninklijke KPN NV - Exhibit 2010
Samsung Electronics America, Inc. et al. v. Koninklijke KPN NV PTAB-IPR2025-00502
Page 58 of 237

5.1.18.2 UE-initiated Content download session initiation for multicast download

Note: The details about acquiring and initiating multicast download have to be contributed and are not specified in this release The procedures need to conform to CDS in TS 102 034 [3] and will be similar to the procedures for unicast download (5.1.18.1) and will be contributed for this section.

5.1.19 Procedure for Preview Service

5.1.19.1 Procedures for BC preview session

5.1.19.1.1 Session initiation

The BC content preview procedures may take place in the following cases:

1) Single-screen BC preview: Preview a specific BC program before the users decide to pay for it.

2) Multi-screen BC preview: Preview the BC services where the preview content is provided through a multi-screen mode (e.g. PiP, Mosaic).

The BC preview session initiation shall use the BC session initiation procedures described in clause 5.1.3.1. The use of single-screen and/or multi-screen BC preview is independent of number of sessions and m-lines that are required. The UE can either establish a single BC session with the SDP carrying multiple m-line(s) including all the BC service identifiers of the BC channels that the UE intends to preview, or the UE can initiate independent sessions for each BC channel that the UE intends to preview.

NOTE: For the BC preview service, regular BC content and preview BC content can use different BC service identifiers.

5.1.19.2 Procedures for CoD preview session

5.1.19.2.1 Session initiation

For preview content having its own content identifier, the preview procedures refer to procedures specified in clause 5.1.4.2.

When the UE intends to terminate the CoD session, the procedure in clause 5.1.4.4 can be used.

5.1.20 Procedure for Session Transfer

5.1.20.1 Generic Procedure

These procedures are generic to all session transfer modes. For all modes the transferee UE initiates the new session that replaces the transferred session.

5.1.20.1.1 Transferee UE session initiation

The transferee UE shall generate an initial INVITE using the same procedure in 5.1.4.2 with the following qualifications:

- A new SIP header Replace header is included and is set to the information retrieved from the incoming REFER as per section 5.1.20.2.3 Transferee UE Handling for Incoming Session Transfer Request
- For the push mode of session transfer, the domain part in the "Request-URI" is set to the field extracted from the To header embedded in the Refer-To header in the incoming REFER received by the transferee UE.
- Finally, the SDP composition is based on the information extracted from the body header in the Refer-To header in the incoming SIP REFER.

Koninklijke KPN NV - Exhibit 2010
Samsung Electronics America, Inc. et al. v. Koninklijke KPN NV PTAB-IPR2025-00502
Page 59 of 237

5.1.20.2 Session Transfer – Push Mode

5.1.20.2.1 Transferor UE Locating a Transferee

To identify a transferee UE for a session, the transferor shall subscribe to the Registration-event package for the public user identity of the user as specified in ES 283 003 [20]. The transferor UE shall then locate an appropriate UE from the returned information and initiate a session transfer request to it according to clause 5.1.20.2.2.

5.1.20.2.2 Transferor UE Initiation of Session Transfer Request

The transferor UE shall generate a REFER request to the transferee UE identified in clause 5.1.20.2.1. The transferor UE shall follow the procedures in 3GPP 24.237[61] section 15 entitled "15 Roles for inter-UE transfer without establishment of collaborative session".

In particular, the Request URI in the REFER request shall be set to the target device contact information derived from information returned in clause 5.1.20.2.1. The tranferor shall include in the contact header field a public GRUU or a temporary GRUU.

The Refer-To header in the REFER request shall be set to the remote target URI included in the contact header field returned in the SIP 200 OK associated with initial session CoD setup by the transferor. Additionally, the Refer-To shall be extended with the following URI headers fields:

- Replaces header field SHALL include the SIP dialog identifier for the original CoD session as per [RFC3891]
- Require header field populated with the option tag value "replaces"
- To header field includes the original content identifier copied from the Request URI of the original SIP INVITE request initiated from the transferor.
- Optionally an Accept-Contact header field with the g.3gpp.icsi-ref media feature tag set to the IPTV Communication service identifier "urn%3Aurn-7%3A3gpp-service.ims.icsi.iptv"
- P-preferred-Service set to IPTV Communication service Identifier urn:urn-7:3gpp-service.ims.icsi.iptv
- body header. This contains the SDP body to be included in the CoD request initiated from the transferee UE. The SDP body shall contain the same number of media lines as the SDP used in the original CoD session from the transferor UE. Each media line shall indicate the same media type as its corresponding media component in the SDP used in the original session by the transferor UE.

The body of the REFER request shall include the IPTV Content Marker for the original CoD session.

Upon receipt of a SIP 200 OK, the transferor UE shall wait for the outcome of the transfer request.

Upon receipt of a SIP UPDATE or SIP re-INVITE on the old session, instructing the UE that the media is on hold (port set to 0), the transferor shall abstain for performing any RTSP transactions on the old session.

Upon receipt of a SIP NOTIFY request, indicating the success of the session transfer request, the transferor UE returns a SIP 200 OK final response.

The transferor UE shall receive a SIP BYE request to terminate the CoD session to which the transferor UE returns a SIP 200 OK. This completes the successful transfer of the session.

5.1.20.2.3 Transferee UE Handling for Incoming Session Transfer Request

Upon receipt by a UE for a SIP REFER request that indicates a session transfer, and if the transferee UE accepts the incoming SIP REFER, after validating the SIP REFER request, a SIP 200 OK request is returned as a response.

The transferee UE extracts the following information from the incoming SIP REFER request:

- The Content URI extracted from the To header included in the Refer-To header.
- The body header to use as the SDP for initiating a session
- The Dialog ID to be replaced, extracted from the Replace header, in the Refer-To header

Koninklijke KPN NV - Exhibit 2010
Samsung Electronics America, Inc. et al. v. Koninklijke KPN NV PTAB-IPR2025-00502
Page 60 of 237

- The IPTV Content Marker from the SIP REFER body.

Subsequently, the transferee UE initiates a new CoD session as per clause 5.1.20.2.1.

Once the session is successfully established, the transferee initiates a SIP NOTIFY towards the transferor UE.

Upon receipt of SIP 200 OK response, the transferee UE stores the relevant information and is now ready to start trick-play mode for viewing the content

5.2 Service Discovery Function (SDF)

5.2.1 Procedure for IMS registration

If delivery of service discovery information using push mode is supported, the SDF acts as a third-party registrar and receive REGISTER requests from the Core-IMS during the IMS registration phase.

The SDF shall store the public user identity of the user as received in the To header and use it to initiate delivery of service discovery information in push mode towards this user. The SDF shall answer to the REGISTER request with a SIP 200 OK response as specified in ES 283 003 [20].

If delivery of service discovery information in push mode is not used, the SDF shall send a 501 error response to the Core-IMS.

5.2.2 Procedure for service attachment

5.2.2.1 Push mode

In the push mode, after the regular third-party registration, the SDF shall generate a SIP MESSAGE to the UE, and the service attachment information is taken in the message body of the SIP MESSAGE.

The SDF uses the SIP MESSAGE to transport the service attachment information, and the SDF shall generate a SIP MESSAGE request in accordance with ES 283 003 [20] and TS 124 229 [24] as used in ES 283 003 [20].

The contents of the SIP method request shall be as follows:

- The Request-URI of the SIP MESSAGE request shall be set to the public user identity of the intended recipient.
- The From head shall be set to the SIP URI of the SDF.
- The To head shall be set to the public user identity of the intended recipient.
- The content type shall be set to "application/vnd.etsi.iptvdiscovery+xml".
- The message body shall conform to the XML schema described in annex M and shall be according to clause 5.2.2.3.

The SDF shall send the SIP MESSAGE request towards the Core IMS according to the procedures of the Core IMS.

When the SDF generates and sends the service attachment information to the UE, it can check IPTV profile of the user, and provides the custom/personalize service attachment information to the UE. IPTV profile including:

- Location information, e.g. the SDF can retrieve the location of the UE and send the address of the SSF based on the location of the UE.
- User subscription information.
- UE capabilities, including the model, vender, version, coding format etc., and the SDF can send the service attachment information to the UE based the UE capabilities. When the service attachment information is changed, the SDF may generate a SIP method request including new service attachment information.

Koninklijke KPN NV - Exhibit 2010
Samsung Electronics America, Inc. et al. v. Koninklijke KPN NV PTAB-IPR2025-00502
Page 61 of 237

5.2.2.2 Pull mode

The SDF addresses may be determined by the UE using any of the alternatives as defined in annex I.

When the SDF receives a SUBSCRIBE request, if personalized information is required it shall perform user's identity verification as defined in ES 283 003 [20], clause 5.7.1.4. After successful user identification if an IPTV User Profile is available it is possible to perform personalization of the body (Service Attachment Information) of the NOTIFY. Filtering may also be performed if device capabilities are available to the SDF.

If the SDF receives a SIP SUBSCRIBE message body from the UE carrying UE capabilities, the SDF shall process the SIP request as follows - if the content-type in the request does not match "application/vnd.etsi.iptvueprofile+xml:, then the SDF shall respond with a 415 Unsupported Media Type error.

The SDF shall examine the parameters specified in the SIP SUBSCRIBE body and shall then record UE capabilities information as part of the IPTV user profile data.

NOTE 1: The UE capabilities that are recorded as part of the IPTV user profile may be used by the SSF for personalization purposes.

For a successful subscription, the SDF shall generate a SIP 200 OK in response to the SUBSCRIBE request. The SDF shall then send a NOTIFY request immediately.

NOTE 2: The SDF can select personalized SSF information based on IPTV user profile. For example, the SDF will send only addresses of SSF(s) that contain information (e.g. EPG) related to the BC service package(s) subscribed by the user.

The contents of the NOTIFY request shall be as follows:

- The Event header shall be set to the "ua-profile" event package.
- The "effective-by" parameter for the event header shall be set to 0.
- The content type shall be set to "application/vnd.etsi.iptvdiscovery+xml".
- The message body shall conform to the XML schema described in annex M and shall be according to clause 5.2.2.3.

Koninklijke KPN NV - Exhibit 2010
Samsung Electronics America, Inc. et al. v. Koninklijke KPN NV PTAB-IPR2025-00502
Page 62 of 237

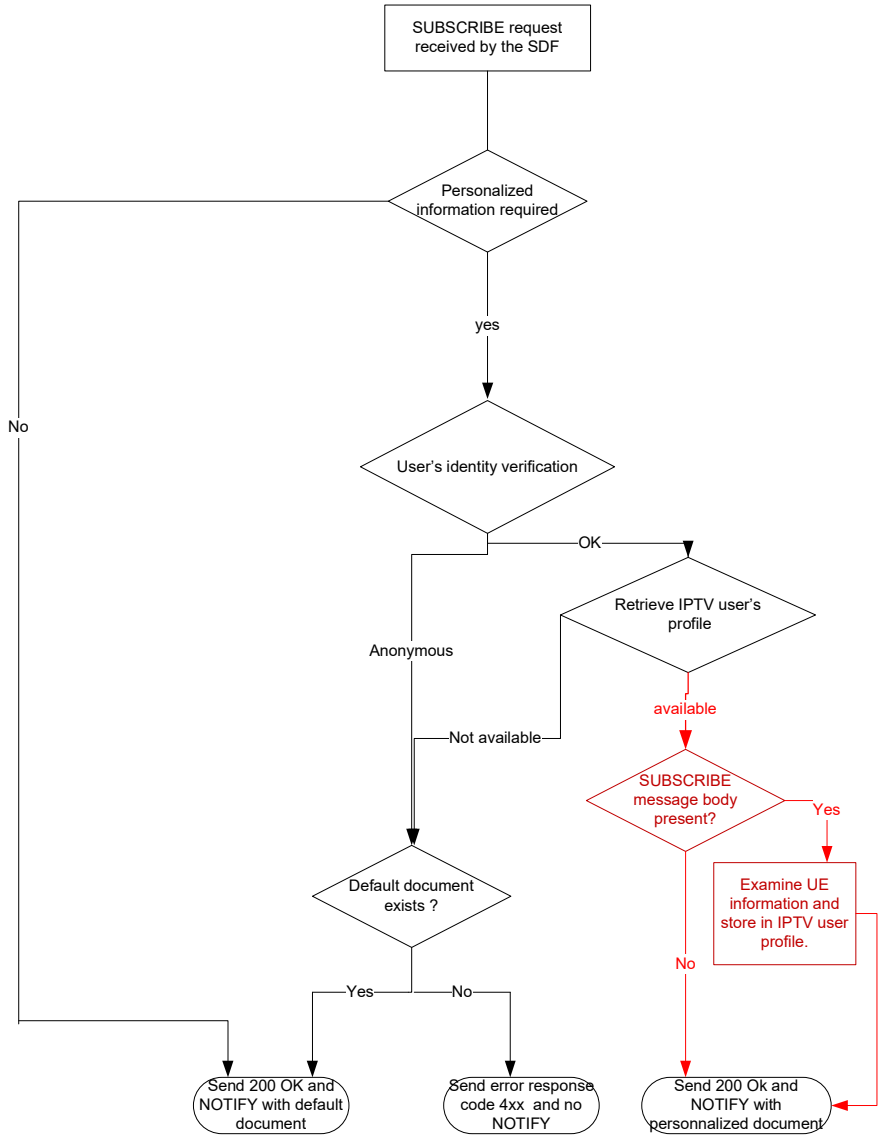

Figure 5.2.2.2: SDF logic for processing SUBSCRIBE requests

When any parameter of service configuration information has changed, the SDF may generate a NOTIFY request including new service configuration information.

Koninklijke KPN NV - Exhibit 2010
Samsung Electronics America, Inc. et al. v. Koninklijke KPN NV PTAB-IPR2025-00502
Page 63 of 237

5.2.2.3 Service Attachment Information

The body of the SIP message from SDF shall include an XML document as defined in annex M listing SSF addresses and the means of connecting to the SSFs for retrieving service selection information.

For each SSF, the following sub-elements are populated as follows:

Table 5.2.2.3: SSF information sending by SDF during service attachment procedure

Element Name	Description	Mandatory(M)/ Optional (O)	Many = several instances are possible
SSF	Root element	M	Many
@ID	Identifier for SSF defined uniquely for a given SDF	M	
@Technology	Indicates the technology used for delivering service selection information. Currently defined technologies are "dvb.org_iptv""openmobilealliance.org_bcast" , "tispan.org_sad" , "tispan.org_tva2" , and "tispan.org_iptvcontentmarker". Refer to annex L for the mapping of Technologies defined in the present document Refer to annex O for the definition procedure of new technologies	M	
@Version	This is incremented when one or more fields in SSF element have changed		
Description	Description of the SSF for potential display in one or more languages. One description is allowed per language	O	Many
ServiceProvider	Provides information about IPTV service provider	O	
@DomainName	The IPTV service provider domain name	M	
@LogoURI	Link for the IPTV Service Provider Logo	O	
Name	Name of the IPTV Service Provider for potential display in one or more languages. One name is allowed per language	M	Many
Description	Description of the IPTV Service Provider for potential display in one or more languages. One description is allowed per language	O	Many

Koninklijke KPN NV - Exhibit 2010
Samsung Electronics America, Inc. et al. v. Koninklijke KPN NV PTAB-IPR2025-00502
Page 64 of 237

Element Name	Description	Mandatory(M)/ Optional (O)	Many = several instances are possible
Pull	Provide information to access SSF via Pull Mode	O	Many
@Location	URI of the SSF	M	
DataType	Specifies the type of service selection information available at the SSF (e.g. COD, BC)	M	Many
@Type	The type of service selection information. The exact format is determined by the Technology	M	
Segment	Used to logically separate service selection information	The mandatory/optional nature of this parameter depends on the SSF Technology and is detailed in annex L	
@ID	Identifier for segment. The exact format is determined by the Technology	M	
@Version	This is incremented when the information in segment changes	O	
Push	Provide information to access SSF via Push Mode	O	Many
@IPVersion	Specifies the IP Version (4 or 6). If omitted, then version 4 is assumed	O	
@MulticastAddress	The address to join to in order to retrieve service selection data	M	
@MulticastAddress	The address to join to in order to retrieve service selection data	M	
@SourceAddress	The address of the sender of the service selection data	O	
DataType	Specifies the type of service selection information available at the SSF (e.g. COD, BC)	M	Many
@Type	The type of service selection information. The exact format is determined by the Technology	M	
Segment	Used to logically separate service selection information	The mandatory/optional nature of this parameter depends on the SSF Technology and is detailed in annex L	
@ID	Identifier for segment. The exact format is determined by the Technology	M	
@Version	This is incremented when the information in segment changes	O	

NOTE 1: The mechanism used by the SDF to gather SSF information belonging to multiple service providers is outside the scope of Release 3.

The following constraints apply to XML documents as described by table 5.2.2.3:

- There shall be at least one Pull or Push element specified for an SSF.
- When an optional element is included in the XML document, then all mandatory attributes and sub-elements related to this element shall be included as well.
- Extensions to the elements are possible (refer to the XML schema defined in annex M).

NOTE 2: Alternatively, annex J describes the optional case, when using a non-SIP AS based SDF (e.g. for legacy purpose) as described in annex A of TS 182 027 [2].

Koninklijke KPN NV - Exhibit 2010
Samsung Electronics America, Inc. et al. v. Koninklijke KPN NV PTAB-IPR2025-00502
Page 65 of 237

5.3 Service Control Function (SCF)

5.3.1 Procedure for BC service

5.3.1.1 UE-initiated session initiation

The SCF shall support the procedures specified in ES 283 003 [20] applicable to an AS acting as a terminating UA.

Upon receipt of SIP INVITE request, the SCF shall examine the Request-URI to determine that it is a BC session initiation request. According to the user subscription information, the SCF shall check the service rights of requested broadcast service packages and multicast addresses. If the SCF supports the SIP INFO framework, it shall look for the Recv-Info header.

If the header is present then the SCF shall be able to control the reporting the selected channel.

If the header is absent, then the SCF shall not be able to control reporting of the selected channel.

Following that, the SCF shall examine the SDP parameters. In particular:

- It shall examine the a=bc_service parameter. This parameter contains the channel the UE intends to join. If the bc_service parameter does not point to a channel that the UE is allowed to join the SCF shall not accept the offer and shall answer with a 403 error code.
- If present it shall examine the a=bc_service_package attributes and verify that the referred service packages are allowed in the user profile. The SCF shall limit the service packages and the BC services according to the user subscription (see below). If none of the service packages are subscribed, the SCF shall answer with a 403 error code.
- It shall examine the c-line(s) to determine that it is a multicast session. It may also check that it corresponds to the bc_service parameter. If not, the SCF shall answer with a 403 error code.
- It shall examine the b parameter if present to verify that it is the largest bandwidth of the BC services the UE intends to join. If not, the SCF shall answer with a 403 error code.

If the SDP parameters are examined successfully, the SCF shall answer with a SIP 200 OK, indicating the SDP answer as follows:

- The c-lines and m-lines shall be identical to ones indicated in the SDP offer.
- It shall include an a=recvonly attribute.
- It shall include a b-line parameter with the same value as in the offer, if present. If the b-lines were not present in the offer, the SCF shall include one with a value set to the largest bandwidth of all the BC services contained in the indicated service packages attribute.
- If the SDP offer includes one or more a=bc_service_package attribute the SDP answer shall include the same number of attributes or less. The SCF shall remove service packages not subscribed by the user. If no bc_service_package attributes are included in the SDP offer the SCF shall include in the SDP answer one or more a=bc_service_package attribute, except if the SCF knows that the RACS is pre-provisioned with the list of subscribed channels and if all the subscribed channels are allowed for the session. In that case, the inclusion of a=bc_service_package is optional.

NOTE: How the resources are pre-provisioned is a deployment issue; these attributes may be included for updating dynamically the RACS with new service packages or multicast address, when the UE knows its profile.

The service packages shall be populated according to the user profile to indicate the service packages and BC services that can be used for the session according to annex N.

If a=bc_service_package attribute is included the SCF shall include one or more mult_list parameter(s) if the user has not subscribed to the entire service package. It may also include the bc_service_id_list containing the list of subscribed BC service ids. If the user has subscribed to the entire service package, the inclusion of mult_list parameter is optional (e.g. depending on SCF local policies).

Koninklijke KPN NV - Exhibit 2010
Samsung Electronics America, Inc. et al. v. Koninklijke KPN NV PTAB-IPR2025-00502
Page 66 of 237

Finally, if the UE supports the SIP INFO framework, and if the SCF, as well, supports the SIP INFO frameowork, then the SCF shall include the Recv-Info header in the SIP 200 OK and set it to the desired option, i.e. allow or disallow reporting the selected channel

5.3.1.1A SCF-initiated session initiation

The SCF shall support the procedures specified in ES 283 003 [20] applicable to an AS acting as an originating UA.

Upon a cause for a BC session initiation, the SCF shall generate an initial INVITE request as specified in ES 283 003 [20] for an AS acting as an originating UA.

The Request-URI in the INVITE request shall be the public user identity of the UE that is to be invited. The TO header shall have the same URI as the Request-URI.

The SCF shall add a P-Asserted-Identity header containing the PSI (Public Service Identifier) of the BC Service. The FROM header shall have the same URI as the P-Asserted-Identity header.

If the SCF supports the SIP INFO framework, then the SCF shall include the Recv-Info header in the INVITE and set it to the desired option, i.e allow or disallow reporting the selected channel

An SDP offer shall be included in the request. The SDP offer shall be done in accordance with the allowed parameters and with media capabilities and required bandwidth for the BC session.

The SDP offer at media level shall include the following elements:

- The m-line(s) shall be set according to the mapping defined in clause L.2 for the BC service the SCF wants the UE to join.
- The c-line(s) shall be set according to the mapping defined in clause L.2 for the BC service the SCF wants the UE to join.
- An a=bc_service:BCServiceId line to indicate the BCServiceId (channel) that the SCF wants the UE to join.
- Optionally one or more a=bc_service_package attributes as defined in annex N. The SCF determines the allowed service packages based on the user profile.
- If the SCF has knowledge of the largest bandwidth of all the BC services included in the session, the b-line shall be included and set to this value.
- An a=recvonly line.

If the SCF receives a 488 error code with warning 370 Insufficient Bandwidth the SCF may perform a new SIP INVITE with a lower maximum bandwidth for BC service the SCF wants the UE to join. This procedure may be repeated. If no agreement can be reached the SCF may act accordingly.

5.3.1.2 Session modification

Upon receipt of a re-INVITE request or an UPDATE request, the SCF shall follow the procedures defined in ES 283 003 [20] concerning the AS acting as a terminating UA or a B2BUA.

When receiving an SDP offer, the SCF may modify the SDP answer in accordance to the user subscription. If the SCF finds a media line not compatible with the user's subscription, it shall set the port of this media line to 0. If none of the media lines are acceptable, it shall reply with a 403 error response.

Upon request of a BC session modification, the SCF shall send a re-INVITE or an UPDATE request, depending on the dialogue state, and follow the procedures defined in ES 283 003 [20] concerning the AS acting as an originating UA.

5.3.1.3 BC service with trick-play mode

When supporting BC service with trick play, the BC session can observe two special cases:

- The Broadcast session is modified to change from Multicast to unicast flow. This is the case in which the UE activates the trick play mode.

Koninklijke KPN NV - Exhibit 2010
Samsung Electronics America, Inc. et al. v. Koninklijke KPN NV PTAB-IPR2025-00502
Page 67 of 237

- The Broadcast session with trick play mode is modified to return to normal Broadcast TV. This is the case in which the UE deactivates the trick play mode by, e.g. switching channels from a paused channel to another live Broadcast TV channels.

5.3.1.3.1 Trick-play mode activation

Within the existing Broadcast TV session, if the session modification request contains Service Action Data with IPTVActionDataCommand set to "SwitchToTM", the SCF shall determine the modify request is for transition from Broadcast TV to Broadcast TV with trick mode and shall act as a B2BUA, terminating the re-INVITE request and sending a INVITE request to initiate a session setup to the MCF in charge of recording the BC service that the user has selected. When sending the initial INVITE message to MCF, SCF shall follow the procedures defined in ES 283 003 [20] concerning the AS acting as originating UA or B2BUA.

Prior to that procedure, the SCF shall check that the SDP in the re-INVITE contains the unicast streams description for content control and content delivery channels to be sent to the MCF to have the necessary parameter to initiate a session towards the MCF. If not, the SCF shall answer to the UE with a 403 error code.

The value of Request-URI contained in the new session initiation request shall be set to the routable identifier of the MCF, i.e. the SIP URI of the MCF.

The TO header shall contain the identifier of the channel to be trick-played i.e. the BC ServiceId included in the Service Action Data XML document or retrieved during session information procedure as defined in clause 5.1.3.5.

If the content or channel that the user has selected is not enabled for trick play, a SIP error code 403 Forbidden, shall be generated as a response.

The SDP offer sent with the INVITE to the MCF will follow the same pattern as in the CoD session initiation.

The SDP answer shall contain the same number of media descriptors as in the offer, following the SDP offer/answer model as indicated in the CoD session initiation clause. The only difference with that is the inclusion of:

- h-offset attribute different than 0, as calculated by the MCF indicating the offset in a given program.

The SIP 200 OK message will be progressed from the SCF to the UE as the response to the session modification. The SDP answer in the SIP 200 OK shall contain the same number of media descriptors as the SDP offer in the re-INVITE.

5.3.1.3.2 Trick-play mode deactivation

Within the existing Broadcast TV session, if the session modification request Service Action Data with IPTVActionDataCommand set to "SwitchToBC", the SCF shall determine the modify request is for transition from Broadcast TV with trick mode to Broadcast TV and shall act as a B2BUA, terminating the re-INVITE request and sending a BYE to terminate the session to the MCF.

When the trick play mode is deactivated by the UE, the SCF will need to unlink the MF from the session in order to return to the normal broadcast session.

Before answering to the UE, the SCF shall check that the m-lines containing the multicast streams have been added by the UE and those one containing the unicast media streams have been removed. If not, the SCF shall answer to the UE with a 403 error code.

NOTE: How to add or remove a media stream in SDP conforms to ES 283 003 [20].

The SCF will then answer back to the re-INVITE request with a SIP 200 OK for the session to be returned to broadcast TV as defined in clause 5.3.1.2.

5.3.1.4 Session termination

Upon receipt of a BC session termination request, the SCF shall follow the procedures defined in ES 283 003 [20] concerning the AS acting as a terminating UA.

Upon receipt of an internal indication that a BC session shall be terminated, the SCF shall send a BYE request and follow the procedures defined in ES 283 003 [20] concerning the AS acting as a terminating UA.

Koninklijke KPN NV - Exhibit 2010
Samsung Electronics America, Inc. et al. v. Koninklijke KPN NV PTAB-IPR2025-00502
Page 68 of 237

5.3.1.5 Procedure for PPV service

5.3.1.5.1 PPV Session initiation

The PPV may use session initiation of BC as described in clause 5.3.1.1, with the following differences:

The SCF shall examine the SDP parameters. In particular:

1) It shall examine the a=bc_service parameter. This parameter contains the channel the UE intends to join. If the bc_service parameter does not point to a channel that the UE is allowed to join, the SCF enforce the step2).

2) If present it shall examine the a=bc_program parameter. This parameter contains the BC program ID the UE intends to enjoy. If the bc_program parameter does not point to a program that the UE subscribed the SCF shall not accept the offer and shall answer with a 403 error code. If the BC program is not ready to start, i.e. the current time is greater than/equal to program start time, the SCF shall not accept the offer and shall answer with a 403 error code.

   If no a=bc_program parameter is carried, the SCF shall not accept the offer and shall answer with a 403 error code.

5.3.1.5.2 PPV Session termination

Upon receipt of a BC session termination request, the SCF shall follow the procedures defined in ES 283 003 [20] concerning the AS acting as a terminating UA, which is similar with BC session termination as described in clause 5.3.1.4.

When the PPV program ends, SCF shall generate a BYE request and follow the procedures defined in ES 283 003 [20] for an originating UE, which is similar with BC session termination as described in clause 5.3.1.4.

5.3.2 Procedure for CoD service

The SCF shall support the procedures specified in ES 283 003 [20] applicable to an AS acting as a proxy or B2B UA.

5.3.2.1 Procedure for handling missing parameters before session initiation

When receiving the SIP OPTIONS message, the SCF shall select the appropriate media function (see TS 182 027 [2]) and forward the SIP request to the appropriate MCF by changing the "Request-URI" accordingly.

The SCF shall not change the user-part of the TO header in order to keep the content-id in the OPTIONS request.

In certain cases, the SCF may also forward the SIP OPTIONS over to a default media function.

When receiving a 301 or 302 response from the MCF, the SCF shall not forward this message to the UE.

The SCF may check if the MCF indicated in the contact header is allowed destinations.

If allowed, the SCF shall use one of the MCF URI indicated in the contact header of this response and use it as a destination for the redirected OPTIONS.

5.3.2.2 UE-initiated session initiation

When receiving any SIP request, the SCF may examine the request to see if it is compatible with the user's subscription (e.g. parental control level).

If the user is not allowed to initiate a session for the requested content, the SCF shall reply with appropriate, SIP error code 403 Forbidden, response.

The SCF shall select the appropriate media function (see TS 182 027 [2]) and forward the SIP request to the appropriate MCF by changing the "Request-URI" accordingly.

The SCF shall not change the user-part of the TO header in order to keep the content-id in the INVITE request.

In certain cases, the SCF may also forward the SIP INVITE over to a default media function.

Koninklijke KPN NV - Exhibit 2010
Samsung Electronics America, Inc. et al. v. Koninklijke KPN NV PTAB-IPR2025-00502
Page 69 of 237

When receiving a 301 or 302 response from the MCF, the SCF shall not forward this message to the UE.

The SCF may check if the MCF indicated in the contact header is allowed destinations.

If allowed, The SCF shall use one of the MCF URI indicated in the contact header of this response and use it as a destination for the redirected INVITE.

5.3.2.2A SCF-initiated session initiation

Upon a cause for a CoD session initiation, the SCF shall generate an initial INVITE request as specified in ES 283 003 [20] for an AS performing 3rd party call control as an initiating B2BUA, involving coordinated signalling with the UE and the MCF. An example protocol flow is provided in Annex A.3.1A.

For the INVITE request to the UE the Request-URI is the public user identity of the UE that is to be invited. The TO header shall contain the same URI as in the Request-URI parameter.

The SCF shall add a P-Asserted-Identity header containing the CoD session that is to be activated. The FROM header shall have the same URI as the P-Asserted-Identity header. The URI of the CoD session that is to be activated shall be composed of a user and domain part as defined as follows:

- The user part contains the content identifier in a free string format, as defined in TS 182 027 [2].
- The domain part is the Service Provider domain name.

The INVITE request to the UE may contain an empty session description.

The UE offers an SDP to the SCF. Upon receiving the SDP from the UE the SCF selects the MCF and uses the SDP offer in the INVITE to the MCF.

For the INVITE request to the MCF the SCF shall add a P-Asserted-Identity header containing the public user identity of the invited UE. The FROM header shall have the same URI as the P-Asserted-Identity header.

For the INVITE request to the MCF the Request-URI is set to the MCF address. The TO header shall include the content id of the CoD session that is to be activated in the user part of the URI.

When the SCF receives the SIP 200 OK with the SDP answer from the MCF the SCF forwards it in the SIP ACK to the UE.

5.3.2.3 Session modification

Void.

5.3.2.4 Session termination

5.3.2.4.1 Session termination using RTSP method 1

For SCF-initiated CoD session termination, the SCF shall send a BYE Request towards the UE and a BYE request towards the MF as specified in ES 283 003 [20].

5.3.2.4.2 Session termination using RTSP method 2

The SCF shall support the procedures specified in ES 283 003 [20] applicable to an AS acting as a proxy or B2B UA for call release.

For SCF-initiated CoD session termination, the SCF shall send a BYE Request towards the UE and a BYE request towards the MF as specified in ES 283 003 [20].

5.3.2.5 Procedures for handling COD Service action data

Upon receiving an INFO request with Content-type set to "application/vnd.etsi.iptvsad-cod+xml", the SCF retrieves the service action data from the INFO message body and either creates or updates the matching object instance.

Koninklijke KPN NV - Exhibit 2010
Samsung Electronics America, Inc. et al. v. Koninklijke KPN NV PTAB-IPR2025-00502
Page 70 of 237

A SIP 200 OK message with no body shall be sent to the originator if the INFO request is successfully received for an existing call; the service action data objects shall be created (or updated) according to the data retrieved from the INFO message body.

A "405 Method Not Allowed" shall be sent back to the originator if the SCF has no capability to process INFO message.

A "415 Unsupported Media Type" shall be sent back to the originator if the INFO request contains a body that the SCF does not understand.

A "481 Call Leg/Transaction Does Not Exist" shall be sent back to the originator if the INFO request does not match any existing session.

NOTE: The XML schema mapping to the MIME type: "application/vnd.etsi.iptvsad-cod+xml" is available in annex K of the present document.

5.3.3 Procedure for Service Configuration

The UE uses the XCAP to manage the IPTV user profile (see clause 6.1.2). In order to keep the IPTV services data synchronized with the network elements and other terminals that the user might be using, the UE should subscribe from the SCF to changes in the XCAP IPTV documents.

NOTE: Changes may result from XCAP manipulation and/or operator's actions.

When the SCF receives a SUBSCRIBE request having the Event header field value set to "xcap-diff", the SCF shall authorize the request based on the contents of the P-Asserted-Id. If the authorization is successful the SCF shall generate a SIP 200 OK response to the SUBSCRIBE request and generate notifications in accordance with reference [15] and reference [26].

5.3.4 Procedure for PVR Service

5.3.4.1 Procedures for PVR Service Capture Request

Upon receiving a SIP MESSAGE request, the SCF identifies the Content-type associated with the MESSAGE request and takes appropriate actions as specified below.

The SCF then checks whether the Service Package id is indeed authorized for the user issuing the request.

The actual BC service to be recorded/bookmarked is extracted from the XML body carried in the SIP MESSAGE. The SCF checks the rights granted to the user for this particular BC service.

A "415 Unsupported Media Type" shall be sent back to the originator if the MESSAGE request contains a body that the SCF does not understand.

5.3.4.1.1 Procedures for Impulsive Request

Case 1: content_type set to "application/vnd.etsi.iptvsad-bc+xml".

Upon receiving a SIP MESSAGE request with Content-type set to "application/vnd.etsi.iptvsad-bc+xml", the SCF retrieves the service action data from the SIP MESSAGE message body and either creates or updates the matching object instance:

- If the Bookmark attribute is set to "NOW", the SCF should set it to the current timestamp.

NOTE: The XML schema mapping to the MIME type: "application/vnd.etsi.iptvsad-bc+xml" is available in annex K of the present document."

Case 2: content_type set to "application/vnd.etsi.iptvsad-npvr+xml".

Upon receiving a SIP MESSAGE request with Content-type set to "application/vnd.etsi.iptvsad-npvr+xml", the SCF retrieves the service action data from the SIP MESSAGE message body and either creates or updates the matching object instance:

Koninklijke KPN NV - Exhibit 2010
Samsung Electronics America, Inc. et al. v. Koninklijke KPN NV PTAB-IPR2025-00502
Page 71 of 237

- If NPVRContentId is not present, it should be generated by the SCF itself.
- If the request is acknowledged by the proper entities (e.g. N-PVR servers) RecordStatus is set to "Scheduled" by the SCF.
- If the RecordStartDate attribute is set to "NOW", the SCF should set it to the current timestamp.

The SCF may check the tNPVRStorageLimitInTime and tNPVRStorageLimitInVolume parameters associated with the user profile to decide whether to allow the user to capture the selected live content.

Case 3: content_type set to "application/vnd.etsi.iptvsad-cpvr+xml".

Upon receiving a SIP MESSAGE request with Content-type set to "application/vnd.etsi.iptvsad-cpvr+xml", the SCF retrieves the service action data from the SIP MESSAGE message body and either creates or updates the matching object instance:

- If CPVRContentId is not present, it should be generated by the SCF itself.
- If the request is acknowledged by the proper entities (e.g. C-PVR servers) RecordStatus is set to "Scheduled" by the SCF.
- If the RecordStartDate attribute is set to "NOW", the SCF should set it to the current timestamp.

The SCF may extract the target user identity from the TargetUEId attribute, and find out the corresponding target user profile by this user identity. The SCF check the tAuthorizedControlUser parameters associated with the target user profile to decide whether to allow the user who sent the C-PVR capture request to capture the selected live content on behalf of the target user.

On all the cases above, a SIP 200 OK message with no body shall be sent to the originator if the MESSAGE request is successfully received for an existing call and the service action data objects shall be created (or updated) according to the data retrieved from the MESSAGE message body.

For N-PVR,The the SCF follows relevant procedures to initiate the recording of the content by the N-PVR-MF. Details of the procedures are outside scope of the present document.

ForC-PVR, the SCF follows procedures specified in clause 5.3.4.3 to initiate the recording of the content by the Target UE.

5.3.4.1.2 Procedures for Offline Request

Upon receiving a SIP MESSAGE request, the SCF checks to see if the Content-type set to "application/vnd.etsi.iptvsad-npvr+xml". If so, it follows the procedures outlined in corresponding case 2 in clause 5.3.4.1.1.

5.3.4.2 Procedures for N-PVR Session

The SCF follows procedures outlined in clause 5.3.2 for handling a COD session.

NOTE: The XML schema mapping to the MIME type: "application/vnd.etsi.iptvsad-npvr+xml" is available in annex K of the present document.

5.3.4.3 Procedures for C-PVR Service Recording Session

The SCF shall check the C-PVR service action data of the user to validate whether the record start-time is reached, the SCF may also get the C-PVR session related information, e.g. the BC serviceId and the TargetUEId which is populated by SIP instance identifier in clause 5.6.3.

Then the SCF sends a SIP MESSAGE to the UE that indicated by the TargerUEId in the service action data using the notification procedures described in clause 5.3.6, and includes the following sub-elements of "CPVRRecordInfo" element.

- The "NotificationReason" in the message body shall be set to "CPVRRecord", the " CPVRRecordInfo " element shall include the following sub-elements:

Koninklijke KPN NV - Exhibit 2010
Samsung Electronics America, Inc. et al. v. Koninklijke KPN NV PTAB-IPR2025-00502
Page 72 of 237

– The "CPVRContentID", if present, shall be set to the same value that stored in the C-PVR service action data.

– The "BCServiceId" in the message body shall be set to same value that stored in the C-PVR service action data.

– The "RecordEndDate " in the message body shall be set to t same value that stored in the C-PVR service action data.

5.3.5 Procedure for UGC Service

5.3.5.1 Procedure for handling UGC declaration request

Upon receiving a SIP MESSAGE request, the SCF identifies the Content-type associated with the MESSAGE request and takes appropriate actions as specified below.

The SCF shall immediately send a SIP 200 OK response without message body to the originator after the MESSAGE request is successfully received;

The SCF then checks whether the user is authorized for declaring UGC.

When the MESSAGE request contains message body including transaction-id, the SCF shall initiate another MESSAGE request to the originating UE, including the following contents:

- The Request-URI and the To header in the MESSAGE request shall be the public identity of the originator.
- From header shall be set to the PSI of UGC service.
- Call-ID shall be generated by SCF.
- CSeq shall be generated by SCF.
- The Content-type header shall include the MIME type of XML documents representing IPTV service action data: "application/vnd.etsi.iptvsad-ugc+xml ".
- The message body carries a "UGC items" element described in TS 182027[2] clause 7.4.1, including a UGC contentID generated by the SCF, and the same transaction-id extracted from the received MESSAGE.

When the MESSAGE request does contain a message body, the SCF shall treat it as a publication request for UGC description information and take the actions described in clause 5.3.5.2.

The SCF does not need to store the transaction ID as part of the SAD since it is used only during the declaration phase.

5.3.5.2 Procedure for handling publication request of UGC description information

Upon receiving a SIP MESSAGE request, the SCF sends back an immediate 200 OK to the originator, as the same procedure described in 5.3.5.1.

The SCF then checks whether the user is authorized to publish UGC description information.

When the MESSAGE request contains no message body, the SCF shall follow the same procedure as described in 5.3.5.1.

When the MESSAGE request does contain a message body , the SCF shall retrieve the UGC contentID and UGC description information from the message body, then SCF shall establish the relationship between the UGC contentID and the UGC description information and publishes to the interested entities, e.g. SSF.

NOTE: How the UGC description information is published from SCF to other entities is out scope of this specification.

NOTE: It is up to the Service Provider policy when the UGC content has been successfully uploaded but the UGC description information is not published, which is out scope of this specification.

Koninklijke KPN NV - Exhibit 2010
Samsung Electronics America, Inc. et al. v. Koninklijke KPN NV PTAB-IPR2025-00502
Page 73 of 237

5.3.5.3 Procedure for handling UGC creation request

When receiving a SIP INVITE request from the UE, the SCF may examine the request and exchanged session description to see if it is compatible with the user's subscription (e.g. UGC profile).

If the user is not allowed to initiate a session for the requested content, the SCF shall reply with appropriate response, with SIP error code 403 Forbidden.

The SCF shall select the appropriate media function (see TS 182 027 [2]) and forward the SIP request to the appropriate MCF by changing the "Request-URI" accordingly.

The SCF shall not change the To header of the SIP request.

In certain cases, the SCF may also send the SIP INVITE to a default media function.

When receiving a 301 or 302 response from the MCF, the SCF shall not forward this message to the UE.

The SCF may check if the MCF indicated in the Contact header is valid destination.

If allowed, The SCF shall use one of the MCF URI indicated in the Contact header of this response and use it as a destination for the redirected INVITE.

NOTE: UGC content creation using upload method, as well as the protocol used for upload are out scope of current release.

NOTE: Procedures for publishing UGC description in 5.3.5.1 and UGC declaration procedures in 5.3.5.2 may also be embedded in the above UGC creation procedures.

If the SCF has a stored pre-selection for the created UGC, it shall initiate a session initiation to the UE that pre-selected the UGC, as described in 5.3.2.2A for CoD, and includes the contentID of the pre-selected content in the From header.

5.3.5.4 Procedure for handling UGC watching request

5.3.5.4.1 UGC pre-selection

Upon receiving a SIP MESSAGE request for pre-selection of UGC the SCF shall extract the contentID from the message body.

If the contentID is invalid or unknown the SCF shall respond with a 406 Not Acceptable. If the UE is not allowed to pre-select the UGC the SCF shall respond with a 403 Forbidden.

If the SCF accepts the request it shall store the pre-selected contentID and the requesting UE, and send a SIP 200 OK response.

5.3.6 Notification service

SCF decides to inform the user of various events, e.g. based on the user subscription and/or the specific service logic. Then SCF generates and sends a message request for the transport of notification.. Signalling path applies if a single user is to be notified e.g. CoD content recommendation, SCF sends the Message via IMS core to the user. Multicast media path applies if large group of users are to be notified, e.g. upcoming BC program notification to users watching the same BC service, SCF sends the message to the MF which delivers the Message to the users via a multicast channel.

5.3.6.1 Procedure for Notification service using signalling path

The SCF on detection of a trigger event to notify the user, e.g. new CoD availability, incoming call, content recommendation, etc., and the SCF decides to notify the UE through signalling path according to local policy, the SCF shall generate a SIP MESSAGE request in accordance with ES 283 003 [20] and TS 24 229 [24] as used in ES 283 003 [20].

The contents of the above SIP method request shall be as follows:

- The Request-URI of the SIP MESSAGE request shall be set to the public user identity of the intended recipient.

Koninklijke KPN NV - Exhibit 2010
Samsung Electronics America, Inc. et al. v. Koninklijke KPN NV PTAB-IPR2025-00502
Page 74 of 237

- The From header shall be set to the SIP URI of the SCF.
- The To header shall be set to the public user identity of the intended recipient.
- Call-ID shall be generated by the SCF.
- CSeq shall be generated by the SCF.
- The Content-type header shall include the registered MIME type of XML documents representing IPTV Notification service data: "application/vnd.etsi.iptvnotification+xml".
- The message body shall carry the notification data and conform to the XML schema described in annex S:
  - NotificationReason shall be present and set to the reason caused the notification;
    - ContentInsertion, in the case of content insertion service;
    - CPVRRecord, in the case of C-PVR service;
    - InstantMessage, in the case of instant message service;
    - IncomingCall, in the case of incoming call management;
    - ContentRecommendation, in the case of content recommendation service (CRS)
  - ContentIdentifier shall be set to the content identifier related to the notification, if present;
  - NotificationSender shall be set to the identifier of the originator who provides the notification, if present;
  - NotificationReceiver shall be set to the identifier of target user, if present.
  - IncomingCallInfo shall be set to the information of the caller, in the case of incoming call management;
  - ContentInsertionInfo shall be set according to the ad insertion information, in the case of content insertion;
  - CPVRRecordInfo shall be set to the information for C-PVR recording, in the case of C-PVR;
  - ContentRecommendationInfo shall be set to the information for content recommendation, in the case of CRS;
  - MediaPathNotificationInfo shall not be included.
  - MulticastAddress shall not be carried in the body.

The SCF shall send the SIP MESSAGE request towards the Core IMS according to the procedures of the Core IMS in accordance with ES 283 003 [20].

5.3.6.2 Procedure for Notification service using multicast media path

When triggered by a notification event associated with a BC service, e.g. user commenting to the BC program, recommendations for BC watchers, etc., the SCF shall generate a SIP MESSAGE request outside the dialog or SIP INFO message inside the dialog, and then send it to appropriate MCF. The contents of the request shall be as follows:

- The Request-URI in the MESSAGE request shall be MCF URI.
- The From header shall be set to the SIP URI of the SCF.
- The TO header shall contain the same URI as in the "Request-URI" parameter
- Call-ID shall be generated by the SCF.
- CSeq shall be generated by the SCF.
- The Content-type header shall include the registered MIME type of XML documents representing IPTV Notification service data: "application/vnd.etsi.iptvnotification+xml".

Koninklijke KPN NV - Exhibit 2010
Samsung Electronics America, Inc. et al. v. Koninklijke KPN NV PTAB-IPR2025-00502
Page 75 of 237

- The message body shall carry the notification data conforming to the XML schema described in annex S:
  - NotificationReason shall be present and set to the reason caused the notification;
  - ContentIdentifier shall be set to the BC service ID with which the notification is associated, if present;
  - NotificationSender shall be set to the identifier of originator who provides the notification, if present;
  - NotificationReceiver shall be set to the identifier of target user, if present;
  - MediaPathNotificatonInfo shall be set to the information related to the notification using media path, in case of multicast messaging or multicast notification:
    a. MulticastAddress shall be set to the multicast address used for notification delivery, if present;
    b. InstantMessageInfo shall include the notification content text that the NotificationSender wants to send out;

5.3.7 Procedure for restricted trick play

When receiving SIP INVITE request for BC with trick mode or CoD services specified in clause 5.3.1.3 and 5.3.2.2, SCF shall further acquire the restricted trick play policy per the content identity and/or user's subscription information. Following the successful establishment of the session, and if the SCF has restricted trick play policy applicable to the selected content, the SCF shall immediately send a SIP INFO message, including the Restricted- Trickplay Info Package according to the SIP INFO framework, to the MCF selected for the session. The SCF should setup a session towards the UE only until after a confirmation on SIP INFO in order to avoid race conditions. The SIP INFO message SHALL include a XML body to describing the restricted trick play policy. The parameters shall be included as follows:

- ContentID: the identifier for a content that SHALL be controlled by the restricted trick play policy.
- StartTime: the start time that the restricted trick play SHALL be enforced.
- EndTime: the end time that the restricted trick play SHALL be enforced.
- RTSPOperation: the RTSP operations that are not permitted.

The Content-Type header shall be set to "application/vnd.etsi.iptvrestrictedtrickplay+xml".

NOTE: The XML schema mapping to the MIME type: "application/vnd.etsi.iptvrestrictedtrickplay+xml" is available in annex T of the present document.

Note that the MCF must have indicated its willingness to receive the Restricted-Trickplay Info Package

5.3.8 Procedure for Service Initiation for Remote UE

5.3.8.1 Procedure for handling the request of remote UE initial procedures

Upon receiving a SIP REFER request, the SCF shall check whether the user is authorized to perform service initiation and the authorized information list may be set by the Target UE.

If the request is authorized, the SCF then forwards the request to the Target UE.

5.3.9 Procedures for Playlist handling

Playlists that are owned and created by the network can be conveyed using SIP re-INVITE, SIP UPDATE or SIP INFO based on the SIP INFO framework. These playlists are typically not visible to the user, and the user cannot control them for trick mode purposes.

At session startup, playlists are conveyed within a SIP INVITE.

Following the session establishment, conveying the play list using a SIP re-INVITE or a SIP UPDATE implies an immediate cessation of any content currently being streamed, if applicable, and a content switch to the content in the conveyed playlist. The conveyed playlist replaces any existing list.

Koninklijke KPN NV - Exhibit 2010
Samsung Electronics America, Inc. et al. v. Koninklijke KPN NV PTAB-IPR2025-00502
Page 76 of 237

Following the session establishment, conveying the play list using SIP INFO based on the SIP INFO framework results in the conveyed list replacing any existing list.If content is being streamed (from an existing list) when the playlist is conveyed, streaming continues until its completion before content from the new play list starts streaming.

5.3.9.1 Network-Owned Playlist procedures for during CoD session initiation

This procedure is similar to the procedure outlined in clause 5.3.2.2 for CoD session initiation, with the following difference: the SCF generates playlist information and passes it in the SIP INVITE request to the appropriate MCF. Whether the SCF generates the playlist information and sends it to the MCF depends on the content identifier in the Request-URI of the SIP INVITE request.

The playlist information may be generated in two ways:

- Statically – according to pre-configured playlist information
- Dynamically – generated on demand, potentially taking user profile information into account.

In the latter case, the SCF may use external components (e.g. an advertising system).

Before the SCF forwards the SIP INVITE request to the MCF, it adds the playlist information as MIME multi-part to the SIP INVITE request. The SCF shall set "Content-Type: multipart/mixed; boundary=unique-boundary" in the SIP INVITE request.

The SCF should ensure that the SDP part of the SIP INVITE request is contained in the first part of MIME multipart message and the playlist information is added as a subsequent part of this MIME multipart message. The contents of the playlist information shall follow W3C SMIL 2.1[1]:

- The playing sequence information of IPTV contents shall be written in element content whose tag name is "seq".
- A "video src=<IPTV content identifier>" shall be present and be set to IPTV Content identifier (e.g. CoDId, PVRContentID, etc). The position of this element between "seq" elements indicates the playing sequence. This element may include a timing control attribute: "begin", "end" and "dur".
  - "begin" attribute is optionally set to the value of the starting point of IPTV Content.
  - "end" attribute is optionally set to the starting point of IPTV Content.
  - "dur" attribute is optionally set to the duration of IPTV Content.
  - "href" attribute is optionally set to the multicast content source information (e.g. multicast address) from which the content is fetched.

  Additionally, this element may also include the attribute "skip-content" to identify whether trick play control for IPTV content is allowed or not

  - "skip-content" is optionally set to the Boolean value.

There may be one or more playlist entries in a single playlist.

For each playlist entry with the "skip-content" attribute is present and set to false, the SCF shall generate a trick play restriction XML for inclusion in the SDP body as specified in 5.3.7 and sends it to the MCF as a part of a MIME multipart message. If "skip-content" not present, it shall be interpreted as equivalent to be present and set to true.

5.3.9.2 Playlist procedures during an existing CoD session

If the SCF desires to just update the current playlist, the SCF shall send to the MCF a SIP INFO request that includes the Playlist Info-Package in this case, and where the body of the SIP INFO request carries the playlist information as described in 5.3.9.1. The content of the playlist information shall follow W3C SMIL 2.1[39] as well as in 5.3.9.1. Note the Content-Type header in the SIP INFO request shall include the registered MIME type of XML documents representing IPTV playlist data: *"application/vnd.etsi.playlist+xml"*.

The playlist sent by the SCF regarding an ongoing CoD Session overrides any earlier playlist of that session.

Koninklijke KPN NV - Exhibit 2010
Samsung Electronics America, Inc. et al. v. Koninklijke KPN NV PTAB-IPR2025-00502
Page 77 of 237

When composing the playlist, the SCF shall populate it in line with the existing CoD session parameters.If the SCF desires to stop the streaming the current content immediately and switch to a new content, and a new playlist, it shall use a SIP re-INVITE or SIP UPDATE for that purpose. The body of whichever message used shall include the new playlist and populated as described above in section 5.3.9.1.

5.3.10 Procedure for Personalised Service Composition

5.3.10.1 UE-initiated session initiation

When an SCF receives an initial INVITE request from the UE containing a PSCid, it shall check whether it already has a record of the indicated PSCid.

- If it does, then the SCF shall correlate the session with the PSCid.
- If it does not, then the SCF shall make a record of the PSCid and correlate the session with the PSCid.

In both cases, the SCF may perform service logic associated with the PSC, e.g. SCF-initiated session initiation, see clause 5.3.10.2.

5.3.10.2 SCF-initiated session initiation

When the SCF initiates a session within a PSC, it shall include the PSCid in the SDP offer in the initial INVITE request. The PSCid should be globally unique(See clause 5.1.11.2).

- An a=PSCid:<PSCid> line indicates the PSCid

The SCF shall correlate the session with the PSCid.

5.3.10.3 Session modification

Sessions within a PSC can be modified using normal session modification procedures, see e.g. clause 5.3.1.2. For SCF-initiated modification of a session within a PSC, the SCF shall include the PSCid in the SIP re-INVITE request or UPDATE request, depending on the dialogue state.

- An a=PSCid:<PSCid> line indicates the PSCid

The value of the PSCid may be different than in the original INVITE request, which indicates that the session is transferred to another PSC. The value of the PSCid may also be empty, which indicates that the session is removed from the PSC.

For UE-initiated session modification, the SCF shall check the PSCid in the received re-INVITE request or UPDATE request. If the PSCid is different from the original PSCid for this session, this indicates that the session is transferred to another PSC. If the value of the PSCid is empty, this indicates that the session is removed from the PSC.

5.3.10.4 Session termination

Sessions within a PSC are terminated using normal session termination procedures, see e.g. clauses 5.1.3.4 and 5.1.4.4. When a session within a PSC is terminated, then the SCF shall remove the correlation between that session and the PSCid. When the last session within a PSC is terminated, then the SCF shall delete the record of the PSCid.

5.3.11 Procedure for Personalized Channel (PCh) Service

5.3.11.1 Procedure for PCh Declaration Request Handling

Upon receiving a SIP MESSAGE request, the SCF identifies the Request-URI and the Content-type associated with the MESSAGE request and takes appropriate actions as specified below.

The SCF shall immediately send a SIP 200 OK response without message body to the originator after the MESSAGE request is successfully received;

Koninklijke KPN NV - Exhibit 2010
Samsung Electronics America, Inc. et al. v. Koninklijke KPN NV PTAB-IPR2025-00502
Page 78 of 237

The SCF then checks whether the user is authorized for declaring PCh and initiates another MESSAGE request to the UE, including the following contents:

- The To header in the MESSAGE request shall be the public identity of the originator;
- If the original SIP MESSAGE included a contact header with a public GRUU or temporary GRUU, then the Request-URI shall be set to the recieved GRUU. If the original SIP MESSAGE included a contact header with the SIP instance feature tag, and no GRUU. the SCF shall set the Request-URI to the user public identify. Furthermore, the SCF shall include the Accept-Contact header and shall set it to the sip instance feature tag. Finally if the original MESSAGE did not include the contact header, the SCF shall set the Request-URI to the user public identity.
- From header shall be set to the PSI of PCh service;
- Call-ID shall be generated by SCF;
- CSeq shall be generated by SCF;
- The Content-type header shall include the MIME type of XML documents representing PCh service action data: "application/vnd.etsi.iptvsad-pch+xml";
- The message body carries a " PCh ItemList " element described in annex K, including a PChId, and optionally the initial PCh information generated by the SCF.
- The message body shall also carry the same "transaction-id" That is extracted from the incoming MESSAGE request.

The SCF does not need to store the transaction ID as part of the SAD since it is used only during the declaration phase.

5.3.11.2 Procedure for PCh Operation

5.3.11.2.1 PCh Session Initiation

When receiving an INVITE request, the SCF may examine the request to see if it is compatible with the user's subscription (e.g. parental control level).

If the user is not allowed to initiate a session for the indicated PCh, the SCF shall reply with appropriate SIP error code 403 Forbidden, response.

After the request is authorized, the SCF retrieves the IPTV service profile to get the PCh information using the PChId extracted from the Request-URI, and determines the correct PChItemContentId that is to be played.

The SCF selects the appropriate media function (see TS 182 027 [2]) and acts as a B2B UA then forwards the INVITE request to the selected MCF by changing the request accordingly.

- The Request-URI in the request shall be changed to the SIP URI of the selected MCF;
- The user-part of the To header shall not be changed in order to keep the PChId in the request;
- The message body shall include the SDP offer identical with the previous one SCF received;
- The Content-type header representing the PCh control data include the MIME type of " *application/vnd.etsi.playlist+xml* ", which is defined in procedures for Playlist handling of section 5.3.9 .

The message body shall also include the playlist data for PCh, as described in clause 5.3.9.1.

5.3.11.2.2 PCh Content Item Switch

After the PCh session has been established and if there is an overlap between the currently streamed content and a new content the SCF determines if it needs to interrupt the ongoing content.

If the SCF desires to instruct the MCF to stop streaming the current content and switch to a new content, or to simply start streaming a new content when nothing is being streamed due to the previous playlist being completed, it shall send a SIP UPDATE or SIP re-INVITE to that effect. The body of the SIP request shall include the new playlist as defined in

Koninklijke KPN NV - Exhibit 2010
Samsung Electronics America, Inc. et al. v. Koninklijke KPN NV PTAB-IPR2025-00502
Page 79 of 237

Playlist handling of section 5.3.9, and which shall take precedence over any existing playlist, if applicable. In particular, the SIP request shall have the following:

- The Request-URI, To header and Call-ID shall be identical to those present in the PCh session initiation procedure;
- The CSeq shall be generated by the SCF;
- The Content-Type header includes the MIME type representing the PCh control data, i.e. application/vnd.etsi.playlist+xml", defined in procedures for Playlist handling in section 5.3.9;
  - The message body shall also include the upcoming content playlist data for PCh, which carries part of or the whole list of PCh information:as described in clause 5.3.9.

5.3.11.2.3 PCh Overlap Handling

There are several options available for overlap handling. A service provider can support any such options:

Option 1: Overlap not Allowed at PCh provisioning

In this option, the overlap will be resolved during the provisioning and configuration phase so that once this phase is completed, there will be no overlap to handle.

NOTE: The ways that option 1 may be implemented are out of scope of this document.

Option2: Overlap Handling in real time through configured policies

In this option, overlap will be permitted during the configuration and provisioning phase.

When there is an overlap at the time for playing of upcoming content, the SCF shall take appropriate action according to the PChItemServiceType, as below. An example is when a program is extended for linear TV from its original time.

The SCF shall use the policy configured in the IPTV service profile, or the local policy for overlap handling to determine how to handle the conflict, e.g.:

- Keeps the on-going session alive and the SCF initiates another task for recording the upcoming BC content, by using procedure described in clause 5.3.4;
- Keeps the on-going session alive and the SCF modifies the PCh information to delay the play of upcoming CoD content;
- Modify the session to stop the current content and play the next content item, and stores the offset of the on-going CoD content as IPTV service action data at the same time as described in clause 5.3.11.2;
- Modify the session to stop the current content to play the next item as described in clause 5.3.11.2, and initiates another recording task for the on-going session, as described in clause 5.3.4;

Option3: Overlap handling through user interaction

In this option, interaction with the user is being undertaken so the user can select his preference for dealing with the overlap.

If this case the SCF shall send a SIP INFO request with the PCH-Overlap-Handling Info Package to the UE for choice of action, as follows:

- The Request-URI, To header shall be both set to the user's public user identity;
- The Call-ID shall be identical to the one established by the PCh session initiation procedure;
- The CSeq shall be generated by the SCF;
- The Content-type shall be set to the MIME type "application/vnd.etsi.iptvsad-pch-overlap+xml" which representing the PCh conflict option data;
- The message body shall include the options for action that SCF supports (see Annex U).

Koninklijke KPN NV - Exhibit 2010
Samsung Electronics America, Inc. et al. v. Koninklijke KPN NV PTAB-IPR2025-00502
Page 80 of 237

NOTE: The above procedures that SCF negotiates with UE for the choice of the overlap handing takes place when dynamic overlapping occurred, and not at the PCh schedule configuration stage. For example the user is watching an on-going unicast content of the PCh channel and the trick mode operations(pause for 10 minutes) cause the unicast program overlap with the next upcoming live multicast program(which is the next content of the PCh), at this time, SCF uses the above procedures to ask for the choice to handle the dynamically occurred overlapping.

On reception of SIP INFO request, the SCF then examines the Call-ID header, Content-type header to identify the PCh conflict choice request from the UE, and then performs relevant actions accordingly.

Following successful processing of the SIP INFO request, the UE shall send back a SIP 200 OK response to the sender.

Note that the SCF must have indicated its willingness to receive the Info PCh-Overlap-Handling Package

5.3.12 Procedure for Content Insertion

5.3.12.1 Content Insertion at UE Side

Content insertion at the UE side is a generic capability that allows for inserting content. Content insertion is triggered by user input at the UE side or event detection by the UE or SCF. Annex A.6 provides example signalling flows for the case where the SCF detects an event and for the case where a user pauses a CoD stream.

When the SCF detects an event that triggers content insertion at the UE, or is informed of paused content by the UE, the SCF shall check the user subscription data to validate whether the UE accepts content insertion service, the SCF may also get the session related information, e.g. the SIP dialog info as specificed in RFC 4235[42].

The SCF sends a SIP INFO message to the UE using the notification procedures described in clause 5.3.6. The contents of the request message body shall be as follows:

- The "NotificationReason" shall be set to "ContentInsertion";
- The "MessageSender" shall not be included;
- A "ContentInsertionInfo" element shall be included and composed of (see Annex S):
  - The "SessionId" shall be set to the Call-ID of the on-going session;
  - "ContentInsertionReason" describes the reason for ContentInsertion. The currently specified types are "Advertising", "PausedContent", and "Generic".
  - The "ContentInsertionTime" element contains two sub-elements:
    - The "ContentInsertionStartTime", if present, shall be set to the exact timestamp from which the content is to be inserted to the regular content. The absence of "ContentInsertionStartTime" means it is an immediate content insertion event;
    - The "ContentInsertionDuration" in the message body shall be set to the duration of content insertion. The SCF can determine the duration of the content insertion depending on e.g. the (expected) length of the time interval that is available for content insertion, the user identity, the semantic context of the content in the ongoing session, the geographic location of the UE and its local time. In the case of content insertion during a pause, the (expected) length of the time interval that is available for content insertion is retrieved from the SIP INFO message received from the UE.
  - If the content is delivered by multicast, the message body shall include a "MulticastContent" element and carries the BCServiceID, by which the UE uses to get the indicated content;
  - If the content is delivered by unicast, the message body shall include a "UnicastContent" element and carries the the CoD content identifier, by which the UE uses to get the indicated content..

Koninklijke KPN NV - Exhibit 2010
Samsung Electronics America, Inc. et al. v. Koninklijke KPN NV PTAB-IPR2025-00502
Page 81 of 237

5.3.12.2 Content Insertion at MF Side

The content insertion is similar with the playlist described in the section 5.3.9 with the following differences. SCF shall check the user subscription data to validate whether the user accept content insertion service, the SCF may also get the session related information, e.g. the SIP dialog info as specificed in RFC 4235[42].

When there is content to be inserted to an-going cod session the SCF sends to the MF a SIP INFO request including the playlist Info Package in accordance with the SIP INFO framework, and assuming that the MF declared its willingness to receive the playlist Info Package. The content of the request shall be as follows:

- The Content-type header shall include the registered MIME type of XML documents representing IPTV playlist data: *"application/vnd.etsi.playlist+xml"*;
- The Recv-Info header is set to the playlist Info Package
- The message body shall carry the playlist information for content insertion, as described in clause 5.3.9.1;
- To indicate the ongoing session, the playlist information in the message body is enriched with the session ID of the existing CoD Session, and the offset from which the ad content list is to be played;
- The "a href=<Content Source Link>" element if present shall be set to the multicast address from which the inticated content is fetched.

NOTE: How the MF fetches the indicated content by using the content source information is out scope of the specification.

NOTE: the "href" only used for multicast, and is not applicable to unicat.

NOTE: In order to prevent session modification, the content to be inserted may have the same codec and bit rate with the ongoing content.

NOTE: In order to prevent session modification, the content to be inserted may have the same codec and bit rate with the ongoing content.

5.3.13 Procedures for IPTV Content Marker Service

5.3.13.1 Procedure for IPTV Content Marker handling

The IPTV Content Marker handling procedure applies to storing, updating and removing IPTV Content Markers.

When receiving a SIP MESSAGE outside an existing SIP dialog request or SIP INFO request with the IPTV-Content-Marker Info package, based on the INFO Framework, in which the Content-type header is set to "application/vnd.etsi.iptvcontentmarker+xml", the SCF shall extract the IPTV Content Marker data defined in clause 5.1.14.1 (e.g. StartTimeOfIPTVContentMarker, EndTimeOfIPTVContentMarker, UserComment,etc.).

If the IPTVContentMarkerID is not set, the SCF shall issue a unique Content Marker ID and store the retrieved Content Marker data.

If the IPTVContentMarkerID indicated in the received SIP request already exists, the SCF shall update the corresponding Content Marker with the received data, if the Expiry Time is not set to -1. If the Expiry Time is not present, the SCF shall assign an Expiry Time default value. An Expiry Time Value of 0 shall be interpreted as an unlimited Expiry Time. An Expiry Time Value of -1 shall be interpreted as a deletion request and the SCF shall delete the indicated IPTV Content Marker data.

Upon successful completion of above procedure, a SIP 200 OK message response is sent back to the originator.

The UE can retrieve the content marker ID allocated by the SCF using normal XCAP operations.

Note that the SCF must have indicated its willingness to receive the IPTV-Content-Marker Info Package

Koninklijke KPN NV - Exhibit 2010
Samsung Electronics America, Inc. et al. v. Koninklijke KPN NV PTAB-IPR2025-00502
Page 82 of 237

5.3.14 Procedure for Targeted Ad Insertion (TAI)

5.3.14.1 TAI at UE side

The procedures in this section apply when SCF has access to the service state of a user. The SCF should subscribe to the presence state of a user to detectthe IPTV service state data, as describe in clause 5.1.6.

NOTE: Other types of service state detection are out of scope of the present document.

If the user's subscription has been configured to accept ad service, the SCF shall extract the "IPTVContentIdentifier", "ServiceState", "AdInsertionPoint" and other ad specific information from the detected state data as defined in clause 8.14.1 of TS 182 027[2]. The SCF may also get the session related information, e.g. the SIP dialog info as specificed in RFC 4235[424242]. With the above information, the SCF shall make ad decision for the indicated IPTV session,.

Formatted: Font: Check spelling and grammar

NOTE: How the SCF selects ads is out scope of this specifiction. When external ad system is involved in ad selection, the appropriate specifications may be used for reference.

After the ad decision has been made, the SCF shall use the content insertion procedures described in clause 5.3.12.

- The "SessionId" shall be set to the Call-ID of the on-going session;
- The "ContentInsertionStartTime", if present, shall be set to the exact timestamp from which the ad is to be inserted to the regular content. The absence of "ContentInsertionTime" means it is an immediate ad insertion event;

NOTE: How this information (ContentInsertionStartTime, EndTime, multicast and unicast) is retrieved is not specified in the present release.

- The "ContentInsertionEndTime" in the message body shall be set to the ad insertion end time.
- If the SCF decides to use the content delivered by multicast, the message body shall include a "MulticastContent" element and carries the BCServiceID ;
- If the SCF decides to use the content delivered by unicast, the message body shall include a "UnicastContent" element and carries the the CoD content identifier for the decided ad content.

5.3.14.2 TAI at MF side

In order to insert the targeted ad, SCF should subscribe to the presence state of a user to detect the IPTV service state data, as described in clause 5.1.6.

NOTE: Other types of service state detection are out of scope of the present document.

After an ad decision has been made, the SCF shall use the content insertion procedures described in clause 5.3.12.2, where the encapsulated message body shall carry the IPTV Content Identifier for the indicated ad content.

NOTE: SIP INFO messages shall be used when the content inserton command is sent within an existing SIP Dialog between the SCF and the MFC.

5.3.15 Procedures for Content Switch within a CoD Contentlist

5.3.15.1 UE-initiated session Session initiation

This procedure is similar to the procedure outlined in clause 5.3.9.1 for contentlist handling during CoD session initiation with the following difference: the SCF generates the contentlist information and passes it in the SIP INVITE request to the appropriate MCF.

When the SCF forwards the SIP INVITE request to the MCF, the SIP message SHALL carry a XML body to describe the contentlist information.The included parameters shall be as follows:

- The "content-id" attribute shall be set to the IPTV Content identify, which is associated with a list of SwitchedContentItem elements., as follows:.
- The "ContentItemID" element shall be set to the Content item identifier to which the current content-id may be switched;

Koninklijke KPN NV - Exhibit 2010
Samsung Electronics America, Inc. et al. v. Koninklijke KPN NV PTAB-IPR2025-00502
Page 83 of 237

- The "ContentItemName" element shall be set to the name of the content item, for UE to present the content information to the user.

Since the SIP message body contains two kinds of data type (SDP and XML), The SCF shall change the Content-Type Header to "multipart/mixed", in addition, a boundary parameter value should be included in the Content-Type header. Before the start of each content part, a Content-Type header shall be set. For SDP part, the Content-Type header SHALL be set to "application/sdp". For XML part, it shall be set to "application/vnd.etsi.iptvcontentswitch+xml".

5.3.16 Procedures with other IMS Services

5.3.16.1 Instant Messaging Procedures

When an Instant Message is required to be sent to UE's that support OMA Instant Messaging according to [51] these procedures apply.

NOTE a UE that follows these procedures is not required to support IPTV related services, for example the UE may be a mobile phone with support for IMS Communication Services. Such UEs are out of scope of the current specification.

When the SCF requires sending a message to a UE the following procedures shall be followed.

The SIP MESSAGE request shall include in the Accept-Contact header the Instant Messaging feature tag '+g.oma.sip-im' according to [51] and IARI media feature tag 'urn:urn-xxx:3gpp-application.ims.iari.iptv-application' according to [21].

The body may include information relating to IPTV (for example TV program reminder/subscription set by the user).

Note: If information related to IPTV is included in the message, this mechanism serves as an alternative to the procedure in 5.3.6; it is intended to be used if different types of IMS devices are targeted, among which non-IPTV devices.

A response of 200 OK from UE indicates successful reception of the SIP MESSAGE.

5.3.17 Procedures for Unicast Content Download

5.3.17.1 UE-initiated Content Download session initiation

The procedures are similar with the procedures outlined in clause 5.3.2.2 for UE-initiated CoD session initiation, with the following differences: the SCF checks the content identifier selects and forwards the SIP request to the MCF which is in charge of the download service by changing the "Request-URI" accordingly.

5.3.18 Procedure for Preview Service

5.3.18.1 Procedures for BC preview session

5.3.18.1.1 Session initiation

In the case of either single-screen or multi-screen BC preview, the procedures can refer to BC session initiation as described in clause 5.3.1.1.

NOTE: The SCF may execute the preview policy after accept the session initiation, e.g. only allow 5 minutes view time for the user, then send teardown request towards UE.

5.3.18.2 Procedures for CoD preview session

The SCF shall support the procedures specified in ES 283 003 [20] applicable to an AS acting as a proxy or B2B UA.

Koninklijke KPN NV - Exhibit 2010
Samsung Electronics America, Inc. et al. v. Koninklijke KPN NV PTAB-IPR2025-00502
Page 84 of 237

5.3.18.2.1 Session initiation

For preview content having its own content identifier, the preview procedures can use the procedures specified in clause 5.3.2.2.

5.3.19 Procedure for Session Transfer

5.3. 19.1 Generic Procedure

These procedures are generic to all session transfer modes. For all modes, the transferee UE initiates the new session that replaces the transferred session. It is assumed that the SCF includes the session transfer functionality based on 3GPP procedures in that regard.

5.3. 19.1.1 Transferee UE session initiation

Upon receipt by the SCF for an initial INVITE by a transferee related to session transfer, the SCF shall follow the procedure in section 5.3.2.2 with the following qualifications:

- If the request includes the SIP Replace header that refers to a SIP session for which the SCF has no state, the SCF shall return an appropriate SIP 403 (Forbidden) response

- If the request includes the SIP Replace header that refers to a SIP session for which the SCF has a state, then the SCF shall first authorize the user for the request. If the user is not authorized then the SCF shall return a SIP error. If the user is authorized for the request, then section 5.3.2.2 is followed with the following qualifications:

  - If the same MCF of the transferred session can be used, then the SCF shall send a SIP UPDATE (or re-INVITE) to update the SIP session leg with the new SDP for the transferee.

  - If the same MCF of the transferred session cannot be used, and a new one is required, then the SCF shall terminate the SIP leg towards the old MCF, followed by a SIP UPDATE or SIP re-INVITE to the transferor to put the media on hold (transferor UE shall not perform any RTSP transactions), and than create a new SIP session leg for the requested content using existing procedures as defined in section 5.3.2.2

After the SIP leg for the transferred session is successfully established, the SCF returns a SIP 200 OK to the transferee.

5.3. 19.2 Session Transfer – Push Mode

5.3. 19.2.1 Transferor UE Locating a Transferee

To identify a transferee UE for a session, the transferor shall subscribe to the Registration-event package for the public user identity of the user as specified in ES 283 003 [20]. The transferor UE shall then locate an appropriate UE from the returned information and initiate a session transfer request to it according to clause 5.1.20.2.2

5.3. 19.2.2 Transferor and Transferee Handling of Session Transfer Request

Upon receipt by the SCF of a SIP REFER request, the SCF SHALL follow the procedure in 3GPP 24.237[61] section 15 entitled "Roles for inter-UE transfer without establishment of collaborative session". Following that, and if the request is successfully authorized, the REFER request is forwarded to the transferee UE.

The SCF shall receive a SIP 200 OK or a rejection of the transfer request from the transferee, and which it will forward to the transferor.

If the session transfer request is accepted by the transferee, the SCF shall expect a session initiation request to be initiated from the transferee.

Following the successful session initiation by the transferee and the reporting of the successful session initiation to the transferor by the transferee through a SIP NOTIFY, the SCF shall terminate the old session by sending a SIP BYE to the transferor and shall wait for the arrival of the SIP 200 OK.

Koninklijke KPN NV - Exhibit 2010
Samsung Electronics America, Inc. et al. v. Koninklijke KPN NV PTAB-IPR2025-00502
Page 85 of 237

5.4 Media Control Function (MCF)

5.4.1 Procedure for CoD service

The MCF shall support the procedures specified in ES 283 003 [20] applicable to a terminating UA.

5.4.1.1 Procedure for providing missing parameters before session initiation

When receiving SIP OPTIONS request, the MCF shall examine the CoD content identifier present in the user-part of the TO header.

The MCF may decide to redirect the request to another MCF as described in TS 182 027 [2], clause 5.1.3.3. In this case, the MCF shall return a 301 response if the content is not managed by this MCF and the MCF indicates one or more MCF addresses in the contact header as indicated in ES 283 003 [20].

If the MCF responds to the request, the MCF shall answer with the SDP description of the content delivery channel conforming to clause 5.4.1.2.1.1, as requested by the request URI.

5.4.1.2 Session initiation

When receiving COD session initiation SIP request, the MCF shall examine the CoD content identifier present in the user-part of the TO header and the media parameters in the received SDP, if present.

The MCF may decide to redirect the request to another MCF as described in TS 182 027 [2], clause 5.1.3.3.

In this case, the MCF shall return a 301 response if the content is not managed by this MCF or 302 response for any other reasons (e.g. load-balancing).

The MCF indicates one or more MCF addresses in the contact header as indicated in ES 283 003 [20].

5.4.1.2.1 Procedure for establishing the RTSP content control and content delivery channel

5.4.1.2.1.1 MCF as SDP answerer

In the case when the MCF receives a session initiation request, the MCF shall examine the RTSP SDP parameters and shall allocate server ports for the CoD session. If the MCF supports CoD RTSP playback control Method 1 as defined in clause 7.2.1, the MCF shall generate an RTSP session ID for the content control channel. The MCF shall also examine the media lines of the media channel SDP offer.

If none of the media lines in the SDP offer are acceptable, it shall reply with a SIP error code 488 Not Acceptable here, response. One reason may be that the SDP does not match the indicated content.

Otherwise, the MCF shall answer with a SIP 200 OK, indicating the SDP answer. If the content that the user has selected cannot be found the MCF shall reply with appropriate, SIP error code 404 Not Found, response.

The SDP parameters for the RTSP channel shall be set as follows:

- An 'm' line for an RTSP stream of format: m=<media> <port> <transport> <fmt>.
  - The media field shall have a value of "application".
  - The port field is setup according to ES 283 003 [20]. The port number is set to the port allocated by the MCF.
  - The transport field shall be identical to the one received in the SDP offer.
  - The fmt field shall be identical to the one received in the SDP offer.
    (ex. m=application 554 tcp iptv_rtsp).
- An "a=setup" attribute shall be present and set as "passive" as defined in ES 283 003 [20] indicating that connection shall be initiated by the other endpoint (UE)
  (ex:a=setup:passive).

Koninklijke KPN NV - Exhibit 2010
Samsung Electronics America, Inc. et al. v. Koninklijke KPN NV PTAB-IPR2025-00502
Page 86 of 237

- An "a= connection" attribute shall be present and set as "new" as defined in ES 283 003 [20] (ex:a=connection:new).

NOTE: RTSP over UDP is out of scope of the present document.

- One or more a=fmtp lines representing RTSP specific attributes set as follows:
  - An "fmtp:iptv_rtsp h-uri" attribute shall be set to the RTSP URL to be used in the RTSP requests The h-uri can be in form of absolute or relative URI. If absolute URI is specified then it is used as-is in subsequent RTSP requests. If relative URI is specified in form of a media path, then the RTSP absolute URL could be constructed by the UE using the IPAddress (from c-line) and port (from m-line) as the base followed by h-uri value for the media path.
  - (a=fmtp:rtsp h-uri=<request-uri>).
  - If the MCF supports CoD RTSP playback control Method 1 as defined in clause 7.2.1, the MCF shall include a "fmtp:iptv_rtsp h-session" attribute representing the session-id of the RTSP session to be created (ex. a=fmtp:iptv_rtsp h-session＝<rtsp-session>).
  - For content related to BC service with trick-play mode the MCF shall include "fmtp:iptv_rtsp h-offset" attribute that indicates where the playback is to start from (ex. a=fmtp:iptv_rtsp h-offset＝<media-offset>).

For each media stream controlled by the RTSP content control channel, SDP answer shall include a content delivery channel media description set as follows:

- the "m=" line indicates the type of the media, the transport protocol and the port of the related content delivery channel. If an fmt parameter is in the SDP offer it shall be completed with the supported format by the MDF;
- the "c=" line shall include the network type with the value set to IN, the address type set to IP4 or IP6 and unicast address of the flow related to the content delivery channel, (ex. c=IN IP4 <IP_ADDRESS>);
- the "b=" line shall contain the proposed bandwidth. Since the COD media stream is unidirectional the bandwidth shall be set to 0, except for the case that the transport is RTP and RTCP is allowed. `(ex. b=AS:0);`
- an "a=" line with a "sendonly" (ex. `a=sendonly`).

5.4.1.2.2 Procedure for establishing the RTSP channel separately

5.4.1.2.2.1 MCF as SDP answerer

When the MCF receives the SDP offer for establishing only the RTSP channel in the session initiation request, the MCF shall examine the SDP parameters.

If the SDP offer is not acceptable, the MCF shall reply with an SIP error response. Else, the MCF shall answer with a SIP 200 OK, indicating the SDP answer.

The SDP parameters for the RTSP channel shall be set as follows:

- An "m" line for an RTSP stream of format: m=<media> <port> <transport> <fmt>.
- The media field shall have a value of "application".
- The port field is setup according to ES 283 003 [20]. Typically, the port number is a port number of 554 (rtsp server port) on its "m" line, and the "setup" attribute is set to "passive" indicating that connection shall be initiated by the other endpoint (UE).
- The transport field shall be identical to the one received in the SDP offer.
- The fmt field shall be identical to the one received in the SDP offer.

Koninklijke KPN NV - Exhibit 2010
Samsung Electronics America, Inc. et al. v. Koninklijke KPN NV PTAB-IPR2025-00502
Page 87 of 237

- If "a=setup" attribute is present in the offer, it shall be present and set to "passive" as defined in ES 283 003 [20].
- If "a= connection" attribute is present in the offer, it shall be present and set to "new" as defined in ES 283 003 [20].

Optionally,an "a=fmtp:iptv_rtsp h-uri" attribute shall be set to the RTSP URL to be used in the RTSP requests The h-uri can be in form of absolute or relative URI. If absolute URI is specified then it is used as-is in subsequent RTSP requests. If relative URI is specified in form of a media path, then the RTSP absolute URL could be constructed by the UE using the IPAddress (from c-line) and port (from m-line) as the base followed by h-uri value for the media path. (a=fmtp:rtsp h-uri=<request-uri>).

5.4.1.3 Session modification

Upon receipt of a re-INVITE request or an UPDATE request, the MCF shall modify the session as specified in ES 283 003 [20] if the request is acceptable to the MCF in accordance with the user subscription.

In order to modify the session from the MCF side, the MCF shall send a re-INVITE or an UPDATE request.

The SDP parameters for the RTSP channel shall be set to the same parameters as specified in clause 5.4.1.2.2.1 except for the "a=connection" attribute. The attribute shall be set to "existing" as defined in ES 283 003 [20].

For each media stream controlled by the RTSP content control channel the SDP offer shall include a content delivery channel media description set as follows:

- The "m=" line indicates the type of the media, the transport protocol the port of the related content delivery channel.
- The "c=" line shall include the network type with the value set to IN, the address type set to IP4 or IP6, and unicast address of the flow of the related content delivery channel.
- The "b=" line shall contain the proposed bandwidth.
- An "a=" line with a "sendonly".

The MCF shall not modify RTSP channel m-line description in the SDP if the media delivery streams controlled by RTSP are not removed (port not set to zero in m-lines) in the SDP.

5.4.1.3.1 Procedure for establishing the content delivery channel

5.4.1.3.1.1 MCF as SDP answerer

When the MCF receives the SDP offer for establishing content delivery channel in the session modification request, the MCF shall examine the SDP parameters and answer with a SIP 200 OK, indicating the SDP answer.

The SDP parameters for the RTSP channel shall be set to the same parameters as specified in clause 5.4.1.2.2.1 except for the "a=connection" attribute. The attribute shall be set to "existing" as defined in ES 283 003 [20].

The SDP parameters shall include one or more media description sets as follows:

- The "m=" line indicates the type of the media, the transport protocol and the port. The type of the media, the transport protocol shall be identical to the one received in the SDP offer. The port shall be set to the value used for the content delivery channel.
- The "c=" line shall include the network type with the value set to IN, the address type set to IP4 or IP6 and unicast address of the flow of the related content delivery channel.
- The "b=" line shall contain the bandwidth. The bandwidth attribute shall be identical to the one received in the SDP offer.
- The "a=" line with a "sendonly".

Koninklijke KPN NV - Exhibit 2010
Samsung Electronics America, Inc. et al. v. Koninklijke KPN NV PTAB-IPR2025-00502
Page 88 of 237

5.4.1.4 Session termination

5.4.1.4.1 Session termination using RTSP method 1

Upon receipt of a BYE request, the MCF shall terminate the session as specified in ES 283 003 [20].

In order to terminate the session from the MCF side, the MCF shall first close the RTSP session that was established during session initiation by closing the underlying TCP connection if existing (e.g. in case of persistent TCP connection). The MCF shall then send a BYE request as specified in ES 283 003 [20].

5.4.1.4.2 Session termination using RTSP method 2

Upon receipt of a BYE request, the MCF shall terminate the session as specified in ES 283 003 [20].

In order to terminate the session from the MCF side, the MCF shall first close the RTSP session that was established during session initiation by closing the underlying TCP connection if existing (e.g. in case of persistent TCP connection). The MCF shall then send a BYE request as specified in ES 283 003 [20].

5.4.1.5 Procedures for handling COD Service action data

Upon receiving normal playback RTSP PLAY (scale header set to 1) (See Note 1) request from UE, the MCF may send a SIP INFO request to the SCF containing the user related IPTV service action data. The content of INFO request shall be as follows:

- The value of the Request-URI shall be set to the one used in the related session.
- From and To headers shall be set to the one defined during the session initiation procedure.
- Call-ID shall be set to the same value as that of the CoD session.
- CSeq shall be generated by UE following rules defined in ES 283 003 [20] for request within a dialog.
- The Content-type header shall include the registered MIME type of XML documents representing IPTV service action data: "application/vnd.etsi.iptvsad-cod+xml".
- The message body carries the service action data: the matching "Available CoD" object shall be updated so that CoDDeliveryStatus is set to "Ongoing".

NOTE 1: This will only be performed when the very first RTSP PLAY (scale header=1) request is received by the MCF for a given CoD session (to avoid over flooding the network with unnecessary updates when user presses Play subsequently to FFW or FRW).

In the case of normal end of streaming, MCF may send a SIP INFO request to the SCF containing the related service action data. The content of INFO request shall be as follows:

- The value of the Request-URI shall be set to the one used in the related session.
- From and To headers shall be set to the one defined during the session initiation procedure.
- Call-ID shall be set to the same value as that of the CoD session.
- CSeq shall be generated by UE following rules defined in ES 283 003 [20] for request within a dialog.
- The Content-type header shall include the registered MIME type of XML documents representing IPTV service action data: "application/vnd.etsi.iptvsad-cod+xml".
- The message body carries the service action data: the matching "Available CoD" object shall be updated so that CoDDeliveryStatus is set to "Completed".

In the case of error occurring in streaming, MCF may send a SIP INFO request to the SCF containing the related service action data. The content of INFO request shall be as follows:

- The value of the Request-URI shall be set to the one used in the related session.

Koninklijke KPN NV - Exhibit 2010
Samsung Electronics America, Inc. et al. v. Koninklijke KPN NV PTAB-IPR2025-00502
Page 89 of 237

- From and To headers shall be set to the one defined during the session initiation procedureFrom and To headers shall be set to the public identity of the user issuing the INFO message.
- Call-ID shall be set to the same value as that of the CoD session.
- CSeq shall be generated by MCF.
- The Content-type header shall include the registered MIME type of XML documents representing IPTV service action data: "application/vnd.etsi.iptvsad-cod+xml".
- The message body carries the service action data: the matching "Available CoD" object shall be updated so that CoDDeliveryStatus is set to "Failed".

NOTE 2: The XML schema mapping to the MIME type: "application/vnd.etsi.iptvsad-cod+xml" is available in annex K.

If the INVITE request received in session initiation contains an Allow header that does not describe INFO, the MCF shall not send INFO request of CoD service action data.

NOTE 3: INFO request may arrive at the UE if the SCF acts as a proxy. Handling of that case is not specified in the current release. If the SIP INFO request of service action data resulted in 405 or 415 response, the MCF does not send again the INFO request of service action data.

5.4.2 Procedure for support of BC service with trick play

As a general rule, the MCF is not involved in the BC service. Only in the case of a user initiating trick play mode of a Broadcast TV session, the MCF in charge of recording the requested channel will be linked to the session.

At receipt of an INVITE message from the SCF, the MCF will derive the content ID in real time and from the channel identifier it received in the TO header then carry out the same steps as described for the CoD session (see clause 5.4.1.2) before replying back, in a positive case, with the SIP 200 OK message.

In the SDP answer, the only difference with regards to the media descriptors compared to a normal CoD session is the inclusion of an h-offset attribute different than 0.

At receipt of the ACK message acknowledging the SIP 200 OK, trick mode can be initiated.

When the trick mode is deactivated by the UE, the MF will receive a BYE message as in the CoD session termination. The successful release of resources will imply responding with a SIP 200 OK to the SCF.

NOTE: The MF represents a combination of the MCF & MDF. In this context the MCF functionality is expected to be used.

5.4.3 Procedure for N-PVR Session

The MF follows procedures outlined in clause 5.4.1 for CoD session initiation, modification and termination procedures.

NOTE: The MF represents a combination of the MCF & MDF. In this context the MCF functionality is expected to be used.

5.4.4 Procedure for UGC Service

The MCF shall support the procedures specified in ES 283 003 [20] applicable to a terminating UA.

5.4.4.1 Procedure for handling UGC creating Session

When receiving UGC creating session initiation SIP request, the MCF shall retrieve the UGC content ID present in the To header and the media parameters in the received SDP.

After that the selected MCF should establish the relationship between UGC contentID and server ports.

Koninklijke KPN NV - Exhibit 2010
Samsung Electronics America, Inc. et al. v. Koninklijke KPN NV PTAB-IPR2025-00502
Page 90 of 237

5.4.4.1.1 MCF as SDP answerer

In the case when the MCF receives a session initiation request, the MCF shall examine the SDP parameters and shall allocate server ports for the UGC session. The MCF shall also examine the media lines of the media channel SDP offer.

If none of the media lines in the SDP offer are acceptable, it shall reply with a SIP error code 488 Not Acceptable here, One reason may be that the SDP does not match the indicated content.

Else, the MCF shall examine the SDP media description in the SDP offer, when there is an "a=" line with a "sendonly" and there is a UGC contentID in the To header, the MCF shall answer with a SIP 200 OK, indicating the SDP answer.

SDP answer shall include a content delivery channel media description set as follows:

the "m=" line indicates the type of the media, the transport protocol and the port of the related content delivery channel. If an fmt parameter is in the SDP offer it shall be completed with the supported format by the MDF;

the "c=" line shall include the network type with the value set to IN, the address type set to IP4 or IP6 and unicast address of the flow related to the content delivery channel, (ex. c=IN IP4 <IP_ADDRESS>);

the "b=" line shall contain the proposed bandwidth.

if the transfer type is included in the SDP offer it shall be copied into the SDP answer. The MCF may use the bandwidth and if present the transfer-type attributes in the SDP to police the rate the content is being uploaded;

The bandwidth attribute indicates the bandwidth that the MF wants the UE to use for sending media. The MCF uses a pre-configured value to indicate the desired bandwidth.

an "a=" line with a "recvonly"
(ex. `a=recvonly`).

NOTE: UGC content creation using upload method, as well as the protocol used for upload are out scope of current release.

5.4.4.2 Procedure for handling UGC watching Session

Upon receiving a SIP INVITE the MCF shall retrieve the contentID from the To header and shall check if it has an MDF with the stored content or incoming UGC multimedia stream with that contentID:

- If the MCF has an MDF with the stored content, it creates a CoD session as described in clause 5.4.1.2.
- If the MCF has an MDF with the incoming multimedia stream, it creates a mapping between the MDF server ports of the incoming UGC multimedia stream and the RTSP server settings for sending the associated UGC multimedia stream. The MCF acts as CoD-MCF, see clause 5.4.1.2.

If the MCF does not have an MDF with the stored content or incoming UGC multimedia stream with the UGC contentID it shall respond with a 488 Not Acceptable Here.

5.4.5 Notification service

5.4.5.1 Procedure for Notification service using multicast media path

Upon receiving a SIP MESSAGE request outside the dialog or SIP INFO request inside the dialog with Content-type set to "application/vnd.etsi.iptvnotification+xml", the MCF shall extract MulticastAddress, if present, from the message body, otherwise the MCF shall use the ContentIdentifier in the message body to obtain relevant multicast address for notification delivery.

NOTE: The multicast address for notification delivery may be pre-configured on MCF or from management entities, which is out scope of this specification.

A "415 Unsupported Media Type" shall be sent back to the originator if the request contains a body that the MCF does not understand.

A SIP 200 OK message with no body shall be sent to the SCF if the request is successfully received and the notification data is disposed successfully.

Koninklijke KPN NV - Exhibit 2010
Samsung Electronics America, Inc. et al. v. Koninklijke KPN NV PTAB-IPR2025-00502
Page 91 of 237

5.4.6 Procedure for restricted trick play

When receiving a SIP INFO message , including the Restricted-Trickplay Info ,withinPackage, within a CoD or BC with trick modes session, the MCF shall extract the restricted trick play policy from the SIP message body and store it for enforcement against the content in the concerned session.

The procedures for establishing the RTSP content control and content delivery channel should follow the description in clause 5.4.1.2.1. The procedure for establishing the RTSP channel separately should follow the description in clause 5.4.1.2.2.

Note that the MCF must have indicated its willingness to receive the Restricted-Trickplay Info Package

5.4.7 Procedures for Playlist handling

5.4.7.1 Procedures for updating playlist information

Upon receipt by the MCF of a SIP INFO request from the SCF that includes the Playlist INFO package, the MCF shall discard any other playlist it may have acquired prior to that. Subsequently, the MCF checks the availablity of each content listed in the new playlist. The MCF shall return a SIP 301 response if some of the content indicated in the playlist is not controlled by this MCF or a SIP 302 response for any other reason (e.g. load-balancing). There is no difference between this procedures and regular CoD procedures in clause 5.4.1 from a viewpoint of the UE. When delivering content to the UE, the MCF shall switch IPTV Content according to the received playlist information.

If the updated play list information is received through SIP INFO, the MF cotinues to stream the current content, if any, until its completion. Following that, the MF starts playing the content from the new playlist.

If the updated play list is received through a SIP re-INVITE or a SIP UPDATE (which implictly stops the streaming of any content from the old playlist) the MF stops the streaming of the current content and starts playing content from the new playlist(see 5.4.7.2).

5.4.7.2 Procedures for Content Switching according to playlist information

When the MCF is instructed switch content, through a SIP re-INVITE or SIP UPDATE, the MCF stops the content that is currently being streamed and start streaming the next content based on the playlist.

5.4.8 Procedure for Personalized Channel (PCh) Service

5.4.8.1 Procedure for PCh Operation

5.4.8.1.1 PCh Session Initiation

When receiving the INVITE request, the MCF shall examine the PChId included in the user-part of To header, the media parameters in the SDP, and the PCh control data received, if present.

The MCF may store the PCh control data after receiving the request;

NOTE: The MCF may validate the content item(s) carried in the PCh control data before it sends back the response, e.g. verify the source address of the on-demand content, join the multicast group of the live content. How the MCF validates the content item is out scope of the specification.

Then the MCF shall follow the procedure in clause 5.4.1.2 to handle the request, acting as an SDP answerer for the unicast PCh session.

5.4.8.2.2 PCh Content Item Switch

Upon receiving the SIP UPDATE or SIP re-INVITE for a content switch, the MCF shall follow section 5.4.7 Procedures for Playlist handling. The MF shall extract the content source address and the switch start/end time from the playlist, and prepare the delivery of upcoming PCh content item by acquiring content from the content source address before the switch start time.

Koninklijke KPN NV - Exhibit 2010
Samsung Electronics America, Inc. et al. v. Koninklijke KPN NV PTAB-IPR2025-00502
Page 92 of 237

NOTE: The MF represents a combination of the MCF & MDF. In this context the MCF functionality is expected to be used.

NOTE: How the MCF acquires content from the content source is out scope of the specification.

5.4.9 Procedure for Targeted Ad Insertion (TAI)

5.4.9.1 Procedure for Internal TAI option

5.4.9.1.1 TAI at UE side

NOTE: There are no additional procedures needed for the TAI at UE side.

5.4.9.1.2 TAI at MF side

If within a SIP dialog and upon receipt of a SIP INFO message from the SCF that includes the Play-List Info Package, in accordance with the SIP INFO framework and Content-Type of "application/vnd.etsi.playlist+xml", the MF shall follow the content insertion procedure as described in clause 5.4.12 for ad insertion, i.e., extract the ad Content Identifier from the encapsulated message body, and perform ad insertion.

The MF shall repeat the same procedure as above if it receives outside a SIP dialog a SIP MESSAGE with a Content-Type of "application/vnd.etsi.playlist+xml"

Note that the MCF must have indicated its willingness to receive the Play-List Info Package

5.4.10 Procedures for inter-destination media synchronization

5.4.10.1 Synchronization session initiation

If a received INVITE contains a SyncGroupId, the MCF shall store the value of the rtcp-attribute included in the SDP.

The MCF shall assign an SSRC value before responding to the INVITE. A SIP 200 OK response to the INVITE shall include this SSRC value as part of the SDP, using the attribute from RFC 5576 [46], and include both SyncGroupId and rtcp-attribute. The MCF shall also include its CNAME value as part of the attribute.

- a=ssrc:<ssrc-id> <attribute>:<value> as specified in [46].
- a=rtcp-xr: grp-sync,sync-group=<SyncGroupId>, see Annex W.2
- a=rtcp:port [nettype space addrtype space connection-address] as specified in [47]

SyncGroupId is a 32-bit unsigned integer in network byte order and represented in decimal. The value SyncGroupId=0 represents an empty SyncGroupId. The value 4294967295 (2^32-1) is reserved for future use. ssrc-id is a 32-bit unsigned integer in network byte order and represented in decimal.

If the MCF conveys the SDP using RTSP DESCRIBE (i.e. using RTSP method 2), the SDP parameters can be equivalent. Alternatively, if the MCF has not assigned an SSRC value during SIP session setup, it assigns one before responding to an RTSP DESCRIBE.

5.4.10.2 Synchronization session modification

When an SSRC conflict occurs at the transport level, the MF may have to assign a new SSRC value to a media stream. If this concerns a media stream that is part of a synchronization group, the MCF shall use the session modification procedures to communicate this new SSRC to the SC.

5.4.10.3 Synchronization session termination

If the MCF receives session modification request for a media session that is part of a synchronization session, it shall check the request for presence of the SyncGroupId. If the SyncGroupId is not present, the MCF shall end the synchronization session for that SC.

Koninklijke KPN NV - Exhibit 2010
Samsung Electronics America, Inc. et al. v. Koninklijke KPN NV PTAB-IPR2025-00502
Page 93 of 237

5.4.11 Procedures for Content Switch within a CoD Contentlist

5.4.11.1 UE-initiated Session Initiation

The handling of session initiation is similar with the CoD session initiation as described in clause 5.4.1.2, with the following differences:

Upon receipt of the SIP INVITE request, the MCF checks that an "a=fmtp:3gpp_rtsp h-Supported" attribute is present and set as "3gpp-switch" under the "m" line for RTSP stream.

The MCF then extracts the XML body from the SIP INVITE request, and replaces the content ID with the RTSP URL.

The MCF then returns the SIP 200 OK response with the Content-Type header set to "Content-Type: multipart/mixed; boundary=unique-boundary", adds the XML body representing the updated contentlist information as MIME multi-part. The MCF also adds an "a= fmtp:3gpp_rtsp h-Supported" attribute and set as "3gpp-switch" under the "m" line for RTSP stream.

5.4.12 Procedure for Content Insertion at MF Side

When receiving the SIP MESSAGE request with Content-type set to "application/vnd.etsi.playlist+xml", in case there in no ongoing SIP dialog between the SCF and MFC, the MF shall immediately send back a SIP 200 OK response without any message body.

When the MCF receives the SIP MESSAGE request carrying the selected content list from the SCF, the MCF checks the availablity of each content in the playlist. If "a href=<Content Source Link>" element is present the MCF shall contact the source link and fetch the content in case the required content is not on this MF.

The MCF may also pre-fetch the content prior to the actual time for the content insertion, to achieve the seamless delivery of the streams.

NOTE: How the MF fetches the content is not specified in this specification.

After all information is extracted correctly, the content insertion shall be enforced on the MF, i.e. insert or replace the regular content in the on-going session with the content fetched from the content source. The MF may perform transcoding or session modification prior to the content insertion start time.

The MF shall repeat the same procedure as above if it receives within a SIP dialog a SIP INFO message including the Play-List Info Package in accordance with the SIP INFO framework and Content-Type of "application/vnd.etsi.playlist+xml".

NOTE: The MF represents a combination of the MCF & MDF. In this context the MCF functionality is expected to be used.

NOTE: The MCF must have indicated its willingness to receive the Play-List Info Package

5.4.13 Procedure for Unicast Content Download

The MCF shall support the procedures specified in ES 283 003 [20] applicable to a terminating UA.

5.4.13.1 Procedure for handling UE-initiated Content Download session

When receiving content download session initiation SIP request, the MCF shall examine the content identifier present in the user-part of the TO header and the media parameters in the received SDP, if present.

The MCF may decide to redirect the request to another MCF as described in TS 182 027 [2], clause 5.1.3.3.

In this case, the MCF shall return a 301 response if the content is not managed by this MCF or 302 response for any other reasons (e.g. load-balancing).

The MCF indicates one or more MCF addresses in the contact header as indicated in ES 283 003 [20].

Koninklijke KPN NV - Exhibit 2010
Samsung Electronics America, Inc. et al. v. Koninklijke KPN NV PTAB-IPR2025-00502
Page 94 of 237

5.4.13.1.1 MCF as SDP answerer

In the case when the MCF receives a session initiation request, the MCF shall examine the SDP parameters and shall allocate server ports for the content download session. The MCF shall also examine the media lines of the SDP offer. If none of the media lines in the SDP offer are acceptable, it shall reply with a SIP error code 488 Not Acceptable here, response. One reason may be that the SDP does not match the indicated content.

The MCF may also read the bandwidth and if present the transfer-type attributes in the SDP and shape the rate of the content download.

Else, the MCF shall answer with a SIP 200 OK, indicating the SDP answer. The MCF also add the XML body in the SIP 200 OK for the download session description which referenced by the session description URI indicated in Request-URI header in the SIP INVITE request

If the content that the user has selected cannot be found the MCF shall reply with appropriate, SIP error code 404 Not Found, response.

Since the SIP message body contains two kinds of data type (SDP and XML), The MCF shall set the Content-Type Header to "multipart/mixed", in addition, a boundary parameter value should be included in the Content-Type header. Before the start of each content part, a Content-Type header shall be set. For SDP part, the Content-Type header SHALL be set to "application/sdp". For XML part, it shall be set to "application/vnd.etsi.iptvcontentdownload+xml". The XML schema can be refer to the TS 102 034 [3] clause C.2.3.

The SDP parameters for the HTTP channel shall be set as follows:

- an 'm' line for an HTTP connection of format: m=<media> <port> <transport> <fmt>.
  - The media field shall have a value of "application".
  - The port field is setup according to ES 283 003 [20]. The port number is set to the port allocated by the MCF. Typically, the port number is a port number of 80 (http server port) on its "m" line.
  - The transport field shall be identical to the one received in the SDP offer.
  - The fmt field shall be identical to the one received in the SDP offer.
    (ex. m=application 80 tcp iptv_http).
- an "a=setup" attribute shall be present and set as "passive" as defined in ES 283 003 [20] indicating that connection shall be initiated by the other endpoint (UE)
  (ex:a=setup:passive).
- a "c" line shall include the network type with the value set to IN, the address type set to IP4 or IP6 and IP address of the flow of the related HTTP channel
  (ex. `c=IN IP4 <IP_ADDRESS>`).
  - an "a= connection" attribute shall be present and set as "new" as defined in ES 283 003 [20]
    (ex:a=connection:new).
  - Optionally the "b=" line may contain the proposed bandwidth. Since the content download is unidirectional the bandwidth shall be set to 0.
    `(ex. b=AS:0);`

5.4.14 Procedure for Preview Service

5.4.14.1 Procedures for CoD preview session

The MCF shall support the procedures specified in ES 283 003 [20] applicable to a terminating UA.

5.5 Core IMS

In general, the behaviour of Core IMS entities shall conform to the procedures specified in ES 283 003 [20]. This clause provides some further details for specific procedures and services.

Koninklijke KPN NV - Exhibit 2010
Samsung Electronics America, Inc. et al. v. Koninklijke KPN NV PTAB-IPR2025-00502
Page 95 of 237

5.5.1 Procedure for Registration

The behaviour of Core IMS entities when supporting IMS registration shall conform to ES 283 003 [20].

5.5.2 Procedure for Service Attachment

5.5.2.1 Push mode

The behaviour of Core IMS entities when processing the third-party REGISTER and MESSAGE method shall conform to ES 283 003 [20].

The S-CSCF sends a third-party REGISTER request to the SDF that matches the Filter Criteria of the service profile from the UPSF for the REGISTER event.

The Initial Filter Criteria shall include the REGISTER method as the prime Service Trigger Point. Examples of service trigger points that may be used to build an appropriate IFC are available in annex R.

5.5.2.2 Pull mode

The behaviour of Core IMS entities when processing the SUBSCRIBE and NOTIFY methods shall conform to ES 283 003 [20].

SUBSCRIBE requests are routed to the SDF using one of the following methods:

1) The SDF identity received in the Request URI matches a Public Service Identity (PSI) hosted by the SDF.

2) The SUBSCRIBE request matches an Initial Filter Criteria (IFC) stored against the public user identity of the UE.

The present document does not place any restrictions on the procedures to be used for routing a session to a PSI nor on the list of service trigger points to use in building Initial Filter Criteria.

The Initial Filter Criteria shall include the SUBSCRIBE method as the prime Service Trigger Point. Examples of service trigger points that may be used to build an appropriate IFC are available in annex R.

5.5.3 Procedure for Service Configuration

Core IMS entities are not involved during service configuration procedures except if the UE subscribes to notifications to changes to its user profile, in which case the behaviour of Core IMS entities when processing the SUBSCRIBE and NOTIFY methods shall conform to ES 283 003 [20].

SUBSCRIBE requests are routed to the SDF using one of the following methods:

1) The identity received in the Request URI matches a Public Service Identity (PSI) hosted by the SCF acting as a front end to manage the user profile.

2) The SUBSCRIBE request matches an Initial Filter Criteria stored against the public user identity of the UE.

The present document does not place any restrictions on the procedures to be used for routing a session to a PSI nor on the list of service trigger points to use in building Initial Filter Criteria.

The Initial Filter Criteria shall include the SUBSCRIBE method as the prime Service Trigger Point. Examples of service trigger points that may be used to build an appropriate IFC are available in annex R.

5.5.4 Procedure for Service Selection

Core IMS entities are not involved during service selection procedures.

Koninklijke KPN NV - Exhibit 2010
Samsung Electronics America, Inc. et al. v. Koninklijke KPN NV PTAB-IPR2025-00502
Page 96 of 237

5.5.5 Procedure for CoD service

The behaviour of Core IMS entities shall conform to the procedure for handling an originating session as described in ES 283 003 [20].

INVITE requests are routed to the SCF using one of the following methods:

1) The SCF identity received in the Request URI matches a Public Service Identity (PSI) hosted by an SCF providing CoD service logic.

2) The INVITE request matches an Initial Filter Criteria stored against the public user identity of the UE.

The present document does not place any restrictions on the procedures to be used for routing a session to a PSI nor on the list of service trigger points to use in building Initial Filter Criteria.

The Initial Filter Criteria shall include the INVITE method as the prime Service Trigger Point. Examples of service trigger points that may be used to build an appropriate IFC are available in annex R.

5.5.6 Procedure for BC service

The behaviour of Core IMS entities conforms to the procedure for handling an originating session as described in ES 283 003 [20], with the additional capability that the P-CSCF transports the service package attributes as defined in annex N when present to the RACS as part of BC service resource reservation. It also handles appropriate error messages when bandwidth negotiation fails as defined in ES 283 003 [20].

INVITE requests are routed to the SCF using one of the following steps:

1) The well known Public Service Identity (PSI) received in the request URI is mapped to a set of SCFs providing BC service logic.

2) The SCF address is resolved by the INVITE request matching an Initial Filter Criteria stored against the public user identity of the UE.

The present document does not place any restrictions on the procedures to be used for routing a session to a PSI nor on the list of service trigger points to use in building Initial Filter Criteria.

The Initial Filter Criteria shall include the INVITE method as the prime Service Trigger Point. Examples of service trigger points that may be used to build an appropriate IFC are available in annex Q.

5.6 Common Procedures

NOTE: If the application contains a set of optional features and depending on the type of application (for example support of BC or CoD services have different application ids), there might be a need to have multiple IMS Application Reference Identifiers for that application that is one IMS Application Reference Identifier per sub-feature.

5.6.1 IMS Communication Service Identifier

The IMS Communication Service Identifier uniquely identifies the IMS service and associated SIP procedures. The IMS Communication Service Identifier defines restrictions to which SIP procedures are possible within a single SIP session or standalone transaction and how those SIP procedures are used. The IMS communication service contains an aggregation of zero, one, or several media components and the service logic managing the aggregation, represented in the protocols used, see ES 283 003 [20].

URN used to define the ICSI for the "IMS IPTV Service": urn:urn-7:3gpp-service.ims.icsi.iptv.

The URN is registered at http://www.3gpp.org/tb/Other/URN/URN.htm.

Summary of the URN: This URN indicates that the device supports the IMS IPTV Service.

Koninklijke KPN NV - Exhibit 2010
Samsung Electronics America, Inc. et al. v. Koninklijke KPN NV PTAB-IPR2025-00502
Page 97 of 237

5.6.2 Session Control Procedures

The ICSI SHALL be supported by he UE to differentiate the procedures for IPTV service in relation to other IMS services. For example, an IPTV unicast media stream may require differentiation from other unicast streams for other services like telephony.

As specified in TS 24.229, core IMS entities will accept a request which does not contain an ICSI. If Release 2 compliant UE's are supported and the IPTV related ICSI is not supported by the UE the differentiation of services relies on RACS procedures outside the scope of the present specification.

The "IMS IPTV Service" may support different types of media, including media types listed in the present document. The session control procedures for the different media types shall be in accordance with ES 283 003 [20] and the present document, with the following additions:

If the ICSI is used the following applies:

a) "IPTV" is an IMS communication service and the P-Preferred-Service and P-Asserted-Service headers shall be treated as described in ES 283 003 [20]. The coding of the ICSI value in the P-Preferred-Service and P-Asserted-Service headers shall be as described in clause 5.6.1.

b) The UE shall include the g.3gpp.icsi-ref feature tag equal to the ICSI value defined in clause 5.6.1 in the P-Preferred-Service header field in initial requests and responses as described in ES 283 003 [20].

c) The UE shall include the g.3gpp. icsi-ref feature tag equal to the ICSI value defined in clause 5.6.1 in the Contact header field in initial requests and responses as described in ES 283 003 [20].

d) The UE shall include an Accept-Contact header field containing the g.3gpp. icsi-ref feature tag containing the ICSI value as defined in clause 5.6.1 of ES 283 003 [20] in initial requests. If the user requests capabilities other than IPTV, the Accept-Contact header field may contain other feature parameters and feature parameter values, and other Accept-Contact header fields may be added to accurately express user preferences as per ES 283 003 [20].

e) The AS may include the g.3gpp. icsi-ref feature tag equal to the ICSI value defined in clause 5.6.1 in the P-Preferred-Service header field in initial requests and responses as described in ES 283 003 [20].

f) The AS may include the g.3gpp. icsi-ref feature tag equal to the ICSI value defined in clause 5.6.1 in the Contact header field in initial requests and responses as described in ES 283 003 [20].

NOTE: How the user indicates other feature parameters and feature parameter values are outside of the scope of the present document.

5.6.3 UE SIP Instance Identifier

The UE shall support the sip instance feature tag at registration as per sections 4.1 and 4.2 of RFC 5626. Its format SHALL be identical to the format specified RFC 4122. The globally unique identifier may be based on the MAC address of the equipment which the UE resides on, or any other appropriate scheme as defined in the RFC. If the UE only supports release 2 functionality the identifier is not required to be supported.

The Contact header for UE originating SIP requests shall include the sip instance feature tag in all stand-alone (e.g. SIP REGISTER) and all initial requests (e.g. SIP INVITE) relating to the IPTV procedures. The initial requests not relating to the IPTV procedures (e.g. Instant Messaging) may include the sip instance feature tag.

If the originating end, either another UE or SCF, is targeting a SIP request to a specific UE the originating end shall include the Accept-Contact header with the sip,instance feature tag that corresponds to the target UE. This allows targeting a specific user on a specific device.

For some services such as session transfer it is not appropriate to use this method for targeting a user on a specific device. In this case GRUU must be supported by the UE that wishes to use the session transfer service.

Koninklijke KPN NV - Exhibit 2010
Samsung Electronics America, Inc. et al. v. Koninklijke KPN NV PTAB-IPR2025-00502
Page 98 of 237

5.6.4 UE Support for GRUU

A UE that would like to use session transfer services shall support GRUU. To support GRUU, a UE shall conform to RFC 5627. The UE shall include the GRUU in its contact information when it establishes an IPTV service that requires session transfer.

The usage of GRUU beyond IPTV is outside the scope of this specification.

5.7 Synchronization Client (SC)

5.7.1 Procedures for inter-destination media synchronization

5.7.1.1 Synchronization session initiation

Upon a request for an inter-destination media synchronization session, the SC shall initiate this session using modified BC or CoD session initiation or modification procedures, depending on the status of the IPTV service at the moment of the request.

NOTE: There are various ways to convey which services require inter-destination synchronization. This can be signalled via SSF information (e.g. the EPG/ESG), through a shared service control session, with notifications, recommendations, and others.

The SC shall use BC session initiation, described in clause 5.1.3.1., or CoD session initiation, described in clause 5.1.4.2, if no current BC or CoD session is active at the moment of the request for a synchronization session.

If the SC is currently in a BC session at the moment of the request for a synchronization session, it shall use a BC session modification, described in clause 5.1.3.2. If the SC is currently in a CoD session at the moment of the request, it shall use a CoD session modification, described in clause 5.1.4.3.

The SC shall include the SyncGroupId as part of the session initiation or modification request. If the SyncGroupId is known, it shall be set accordingly. If no SyncGroupId is known, e.g. because the SC is first to setup the inter-destination media synchronization, the SC shall include the parameter but leave it empty by setting the value SyncGroupId=0. This SyncGroupId shall be set as a media level attribute as rtcp-xr parameter Media Stream Correlation Identifier, see Annex W.

- a=rtcp-xr grp-sync,:sync-group=<SyncGroupId>, see Annex W.2.

NOTE: The ways that an SC can obtain a SyncGroupId are similar to obtaining a phone conference id. For example, one user can request a new SyncGroupId through an off-line process, and share it with other users through an offline process. If the group of users does already have a group identifier, e.g. a phone conference id, they may reuse this identifier. Also, the SSC room identifier can be reused for this purpose.

When the SC receives any SIP requests or responses, the SC shall examine the media parameters in the received SDP. It shall be able to deal with the following attributes:

- a=ssrc:<ssrc-id> <attribute>:<value> as specified in [46]
- a=rtcp:port [nettype space addrtype space connection-address] as specified in [47]
- a=rtcp-xr: grp-sync,sync-group=<SyncGroupId>, see Annex W.2

SyncGroupId is a 32-bit unsigned integer in network byte order and represented in decimal. The value SyncGroupId=0 represents an empty SyncGroupId. The value 4294967295 (2^32-1) is reserved for future use. ssrc-id is a 32-bit unsigned integer in network byte order and represented in decimal.

The SC shall keep these values for use in synchronization status information and settings instructions procedures, described in clause 11. Since the SSRC value may change if a SSRC conflict is discovered at the transport level, the SC shall be prepared for this.

The SC can be involved in multiple synchronized sessions, as long as the sessions and associated services are disjunctive.

Koninklijke KPN NV - Exhibit 2010
Samsung Electronics America, Inc. et al. v. Koninklijke KPN NV PTAB-IPR2025-00502
Page 99 of 237

5.7.1.2 Synchronization session termination

When the SC leaves a synchronization session, e.g. because there are no other SCs involved, it shall generate a re-INVITE request or an UPDATE request, depending on the dialogue state, as specified in ES 283 003 [20] for an originating UE.

This re-INVITE shall be an exact duplicate of the current session, but omitting the inter-destination media synchronization parameters SyncGroupId, rtcp port and address and SSRC.

Ending an existing BC or CoD session shall also end any associated synchronization session.

5.8 Media Synchronization Application Server (MSAS)

5.8.1 Procedures for inter-destination media synchronization

5.8.1.1 Synchronization session initiation

Upon a request for session setup or modification, the (session-level) MSAS shall examine the SDP containing the media offer for the presence of a SyncGroupId as a media level attribute. If the MSAS can not retrieve a SyncGroupId parameter form the SDP, no further procedures apply.

The MSAS shall assign a media-level MSAS using the SyncGroupId. If the SyncGroupId is present and empty, the MSAS shall assign a new SyncGroupId to the synchronization session and it shall assign a media-level MSAS address and port to be used for this SyncGroupId. If the SyncGroupId is present and is assigned a value, the MSAS shall check if this value is known. If this value is known, the media-level MSAS shall lookup the MSAS address and port to be used for this synchronization group. If this value is not known, the MSAS shall assign store the SyncGroupId and a media-level MSAS address and port to be used for this SyncGroupId.

NOTE: The session-level MSAS can assign address and port values from different media-level MSASes if necessary.

For a BC session setup or modification, the MSAS shall include in its answer to the SC:

- The SyncGroupId, using the media level attribute a=rtcp-xr: grp-sync,sync-group=<SyncGroupId>, see Annex W.2
- The media-level MSAS address and port to be used, using a=rtcp:port [nettype space addrtype space connection-address] as specified in [47]

SyncGroupId is a 32-bit unsigned integer in network byte order and represented in decimal. The value SyncGroupId=0 represents an empty SyncGroupId. The value 4294967295 (2^32-1) is reserved for future use.

NOTE: In order to distinguish RTCP reports coming from the media-level MSAS from the multicast media source, they can have different addresses.

For CoD session setup or modification, the MSAS shall include these same parameters when forwarding the INVITE or UPDATE to the MCF.

The MSAS shall keep track of the members of a synchronization group and the MSAS address and port used for a synchronization group.

5.8.1.2 Synchronization session termination

If the MSAS receives a session modification request of a group member of a synchronization session, it shall check this request for the presence of the SyncGroupId. If the SyncGroupId is not present, the MSAS shall remove the SC from the synchronization group.

If the MSAS receives a session termination request from a group member of a synchronization session, it shall remove this member from the group.

The MSAS shall keep track of the members of a synchronization group. If the removal of a member leads to the situation that only one member remains in the group, the MSAS should end the synchronization group. The MSAS shall

Koninklijke KPN NV - Exhibit 2010
Samsung Electronics America, Inc. et al. v. Koninklijke KPN NV PTAB-IPR2025-00502
Page 100 of 237

do this by sending a re-INVITE or UPDATE to the remaining SC according to existing network-initiated session modification procedures. In this modification the synchronization parameters SyncGroupId, rtcp-parameters and SSRC are removed. The MSAS will leave all other parameters unchanged.

If the last member of a synchronization group leaves the synchronization session, the MSAS shall end the synchronization group.

6 Procedures using HTTP for IMS-based IPTV

6.1 User Equipment (UE)

6.1.1 Procedures for service selection

6.1.1.1 Procedure for service personalization

For HTTP-based data retrieval, when sending the HTTP request to the SSFs, the UE may indicate personalization information to enable personalized answer. This shall be done by adding the following HTTP header to the request:

- X-3GPP-Intended-Identity to transmit the public identity.
- User-agent to transmit UE ID.

The authentication shall follow TS 187 003 [10], and may be performed either using the mechanisms specified in TS 133 222 [14] or HTTP Digest access authentication, as described in ES 283 003 [20].

The UE shall implement Transport Layer Security (TLS), as described in RFC 2246 [323232].

Formatted: Font: Check spelling and grammar

NOTE: Authentication mechanism is specified in the present document.

6.1.1.2 Request of DVB SD&S

In the pull model of unicast delivery of a DVB SD&S data, the HTTP protocol shall be used conforming to TS 102 034 [3], clause 5.4.2.2.

The payload id and segments to be retrieved shall be those advertised in the SDF attachment response.

6.1.1.3 Request of DVB BCG

6.1.1.3.1 Container-based request

In the pull model of unicast container-based delivery of DVB BCG, data the HTTP protocol shall be used conforming to TS 102 539 [13], clause 4.1.2.2.2.

6.1.1.3.2 Query mechanism

In the pull model of unicast query mechanism of DVB BCG data, the HTTP protocol is used to transport SOAP messages. This shall be conforming to TS 102 539 [13], clause 4.2.

6.1.1.4 Request of OMA BCAST ESG

In the pull model of unicast delivery of an OMA BCAST ESG, the HTTP protocol shall be used conforming to OMA-TS-BCAST_Service_Guide, [6], clause 5.4.3.

6.1.1.5 Request of service action data

When the UE requests Service Action Data, it shall send HTTP GET request as defined in RFC 2616 [30].

Koninklijke KPN NV - Exhibit 2010
Samsung Electronics America, Inc. et al. v. Koninklijke KPN NV PTAB-IPR2025-00502
Page 101 of 237

The HTTP URL shall be /tispan/serviceactiondata?id=DomainName&Payload=Type where DomainName and Type are retrieved from the SSF as defined in clause L.1.3.

If Payload is set to 0, it means that the UE requests all available Service Action Data.

When receiving HTTP 200 OK response, the UE shall evaluate the received XML document as defined in clause 6.1.1.6.

6.1.1.5A Request of TV-Anytime Phase 2 XML

In the pull model of unicast delivery of TV-Anytime Phase 2 XML data, the HTTP and SOAP protocols are used to query the SSF.

When the UE contacts the SSF, it shall send HTTP POST requests as defined in RFC 2616 [30]. The HTTP URL shall be /tispan/tva2. The HTTP POST request shall be compliant to [49] and carry a SOAP message body to query the SSF as defined in [49].

Response code handling of HTTP and SOAP complies to [49]. If the SOAP message contained in the HTTP response received from the SSF indicates a successful operation, the UE shall examine the contained TV-Anytime Phase 2 Metdata.

6.1.1.6 Use of service selection information

The UE shall use parameters received from SSF as defined in clause L.2 for BC session initiation and L3 for CoD session initiation.

NOTE: There is no restriction on the UE to use any parameter received from SSF also for other purposes than session initiation, e.g. to present SSF information to the user.

Concerning broadcast service selection information, BC service package parameters are defined in Package Discovery record as described in TS 102 034 [3], clause 5.2.6.5. for DVB SD&S, and in Purchase Item as described in OMA-TS-BCAST_ServiceGuide [6], clause 5.1.2.6 for OMA ESG.BC service parameters are defined in TS 102 034 [3], clause 5.2.6.2. for DVB SD&S and OMA-TS-BCAST_Service_Guide [6], clause 5.1.2.

For each BC service package, when parsing the list of related parameters the UE shall take the following action:

- information relates to BC Service Package whom the UE has already an entree. The UE shall update parameters related to the service package (e.g. the list of related BC services);
- information relates to BC Service Package not known by the UE. The UE shall store parameters related to the service package.

For each BC service, when parsing the list of related parameters the UE shall take the following action:

- information relates to a BC service whom the UE has already an entree. If present, the UE shall update stored BC services parameters;
- information relates to a BC service not known by the UE: the UE creates a new entree for this BC service. If present, it shall store at least multicast and source address(es), port, transport and codecs information related to the BC service.

The UE may store a part of the EPG information covering certain period of time and refresh this information periodically This avoid the UE to contact the SSF every time the user needs to consult the EPG.

If the UE is unable to contact any discovered SSF, it shall not delete stored information.

Concerning Service Action Data record, the UE shall use n-PVR, CoD and BC data as follows:

- if the data type indicates n-PVR service action data, the UE shall use the retrieved data as defined in clause 5.1.2.7;
- if the data type indicates CoD service action data, the UE may use "CoDoffset" parameter to initiate CoD session related to the indicated Content-Id as defined in clause 7.1.1.2;

Koninklijke KPN NV - Exhibit 2010
Samsung Electronics America, Inc. et al. v. Koninklijke KPN NV PTAB-IPR2025-00502
Page 102 of 237

- if the data type indicates BC service action data, the UE may use "BCServiceId" parameter to indicate the channel the UE intend to join in BC session initiation (see clause 5.1.3.1).

6.1.1.7 Query for IPTV Content Marker

When the UE requests IPTV Content Marker, it shall send the HTTP POST request defined in RFC 2616[30].

The HTTP URL shall contain the domain name of the SSF and end with /tispan/iptvcontentmarker.

The HTTP POST request may contain the following parameters to filter the IPTV Content Marker data retrieval on the SSF side:

- IPTVInformationDataCommand shall be set to "Retrieval"
- IPTVContentMarkerIDs=<IPTVContentMarkerIDs> indicate the list of specific IPTVContentMakerID. Wildcards ('*','?') may be allowed, depending on the capabilities of the query processor implementation. Multiple IPTVContentMarkerIDs shall be separated by space character.
- IPTVContentIDs=<IPTVContentIDs> indicate the list of specific IPTVContentID. Wildcards ('*','?') may be allowed, depending on the capabilities of the query processor implementation. Multiple IPTVContentIDs shall be separated by space character.
- owneruserIDs=<owneruserIDs> indicate the list of specific owneruserID. Multiple owneruserIDs shall be separated by space character.
- maxresults=<MaxResults> indicate the maximum number of the query results. There shall be at most one number of maximum results supplied.

When receiving HTTP 200 OK response, the UE shall evaluate the payload in the HTTP response, which contains the IPTV Content Markers as defined in 6.3.1.7

The XML document of IPTV Content Markers to indicate a Content Marker Retrieval in HTTP Response is defined in Annex V.

An SSF technology for IPTV Content Marker handling is described in 5.2.2.3 and Annex L.4.

6.1.2 Procedure for service configuration

6.1.2.1 General

The UE implements the role of an XCAP client, as described in RFC 4825 [9], in accordance with the IPTV application usage specified in annex B.

The UE shall implement HTTP Digest access authentication, as described in ES 283 003 [20].

The UE shall implement Transport Layer Security (TLS), as described in RFC 2246 [323232].

Formatted: Font: Check spelling and grammar

On sending an HTTP request, the UE may indicate the user's identity intended to be used with the SCF or stand-alone XDMS by adding an HTTP X-3GPP-Intended-Identity header (see TS 124 109 [11]) to the outgoing HTTP request.

6.1.2.2 Subscription for notification of state changes in XML document

In order to keep the IPTV services data synchronized with the network elements and other terminals that the user might be using, the UE should subscribe to changes in the XCAP IPTV documents by generating a SUBSCRIBE request in accordance with reference [15] and reference [26].

6.1.3 Procedures for Unicast Content Download

6.1.3.1 Request of Content Download

Once the UE has received the SIP 200 OK from the MCF, it extract the XML body of the download session description, and sends the HTTP GET request to the URL obtained in download session description , the detail can

Koninklijke KPN NV - Exhibit 2010
Samsung Electronics America, Inc. et al. v. Koninklijke KPN NV PTAB-IPR2025-00502
Page 103 of 237

refer to the single server unicast download as defined in TS 102 034 [3] clause 10.6.3.2. The HTTP "Connection" header shall be set to "Keep-Alive" to require persistent TCP connection.

6.2 Service Control Function (SCF)

6.2.1 Procedure for service configuration

6.2.1.1 General

An Application Server implements the role of an XCAP server as described in RFC 4825 [9].

6.2.1.2 Manipulation acceptance

When the XCAP server receives an HTTP PUT, HTTP GET or HTTP DELETE request for manipulating or fetching a resource list, the XCAP server shall first authenticate the request and then perform authorization.

The SCF shall implement HTTP Digest access authentication as described in ES 283 003 [20].

The SCF shall implement Transport Layer Security (TLS) as described in see RFC 2246 [323232].

Formatted: Font: Check spelling and grammar

Clause 6.2.1.3 provides more details on the authentication and authorization of HTTP requests.

Afterwards the XCAP server shall perform the requested action and generate a response in accordance with RFC 4825 [9] and the IPTV application usage specified in annex B.

6.2.1.3 Authentication and authorization

An Authentication Proxy (AP) may exist between the UE and the SCF, in which case the behaviour of the AP is assumed to conform to TS 183 023 [12].

If an Authentication Proxy (AP) is provided in the path of the HTTP request, then the SCF receives an HTTP request from a trusted source (the AP) and contains an HTTP X-3GPP-Asserted-Identity header (TS 124 109 [11]) that includes an asserted identity of the user. In this case the SCF does not need to authenticate the user, but just provide authorization to access the requested resource.

If an HTTP X-3GPP-Asserted-Identity header (TS 124 109 [11]) is not present in the HTTP request or if the request is received from a non-trusted source, then the SCF needs to authenticate the user prior to providing authorization to the XCAP resource by applying the following procedures.

On receiving an HTTP request that does not contain an Authorization header the SCF shall:

a) challenge the user by generating a 401 Unauthorized response that contains the proper Digest authentication parameters (e.g. realm), according to ES 283 003 [20]. Provisioning of credentials to authenticate the user is outside the scope of the present document; and

b) forward the 401 Unauthorized response to the sender of the HTTP request.

On receiving an HTTP request that contains an Authorization header, the SCF shall:

a) apply the authentication procedures defined in ES 283 003 [20]; and

b) authorize or deny authorization depending on the authenticated identity.

Koninklijke KPN NV - Exhibit 2010
Samsung Electronics America, Inc. et al. v. Koninklijke KPN NV PTAB-IPR2025-00502
Page 104 of 237

6.2.1.4 Subscription acceptance and notification of state changes in XML document

When the SCF receives a SUBSCRIBE request having the Event header field value set to "xcap-diff", the SCF shall authorize the request based on the contents of the P-Asserted-Id. If the authorization is successful the SCF shall generate a response to the SUBSCRIBE request and generate notifications in accordance with reference [15] and reference [26].

6.3 Service Selection Function (SSF)

6.3.1 Procedure for service selection

6.3.1.1 Authentication and authorization for personalized service selection information

In case of service selection personalization the SCF shall authenticate the user.

The authentication shall follow TS 187 003 [10], and may be performed either using the mechanisms specified in TS 133 222 [14] or HTTP Digest access authentication as described in ES 283 003 [20].

The SSF shall implement Transport Layer Security (TLS) as described in RFC 2246 [323232].

Formatted: Font: Check spelling and grammar

An Authentication Proxy (AP) may exist between the UE and the SSF in which case the behaviour of the AP is assumed to conform to TS 183 023 [12] and TS 187 003 [10].

If an Authentication Proxy (AP) is provided in the path of the HTTP request, then the SSF receives an HTTP request from a trusted source (the AP) and the request contains an HTTP X-3GPP-Asserted-Identity header (TS 124 109 [11]) that includes an asserted identity of the user. In this case the SSF does not need to authenticate the user, but just provide authorization to access the requested resource.

If an HTTP X-3GPP-Asserted-Identity header (TS 124 109 [11]) is not present in the HTTP request or if the request is received from a non-trusted source, then the SSF needs to authenticate the user prior to providing personalize information by applying the following procedures:

On receiving an HTTP request that does not contain an Authorization header the SSF shall:

a) challenge the user by generating a 401 Unauthorized response that contains the proper Digest authentication parameters (e.g. realm), according to ES 283 003 [20]. Provisioning of credentials to authenticate the user is outside the scope of the present document; and

b) forward the 401 Unauthorized response to the sender of the HTTP request.

On receiving an HTTP request that contains an Authorization header, the SSF shall:

a) apply the authentication procedures defined in ES 283 003 [20]; and

b) authorize or deny authorization depending on the authenticated identity.

6.3.1.2 Procedure for service personalization

If personalization headers are present in the query from the UE, the SSF shall extract the UE ID and/or the public user identity information that is present in the query to customize/personalize the service information that is returned in the query response.

The SSF shall use the public user identity that is specified in the X-3GPP-Intended-Identity header or the X-3GPP-Asserted-Identity header (as defined in clause 6.3.1.1) if an authentication proxy is used to fetch the corresponding IPTV user profile associated with the user. For instance, the Parental Control level (if present) should be used to remove unsuitable elements from the COD listings that are returned to the UE.

Koninklijke KPN NV - Exhibit 2010
Samsung Electronics America, Inc. et al. v. Koninklijke KPN NV PTAB-IPR2025-00502
Page 105 of 237

The SSF shall use the public user identity that is specified in the X-3GPP-Intended-Identity header or the X-3GPP-Asserted-Identity header (as defined in clause 6.3.1.1) if an authentication proxy is used and the UE-ID that is specified in the user-agent header to fetch the corresponding UE profile information from the IPTV user profile associated with the specified IPTV user. If present, the SSF should use the UE capabilities to return back service information matching the capabilities supported by the specific UE. For example, The UE Capabilities information such as supported video frame rates and supported encodings can be used to identify the decoding and display capabilities of the UE and can be used to return back only SD content listings to UE that has no HD support.

The fetching of IPTV user profile shall be done towards a dedicated database or UPSF within a service provider domain as specified in TS 182 027 [2], clause 7.2.4.

NOTE: The support of personalization for multiple service providers from a single UPSF as well as the interface between the SSF and the dedicated database is out of scope of the present document.

6.3.1.3 Delivery of DVB SD&S

In case an SSF receives an HTTP request for unicast delivery of DVB SD&S data it shall act as a so-called SD&S SSF.

When the SD&S SSF receives an HTTP GET request, if personalization headers are presents it shall use those headers in order to build a personalized response.

The SD&S SSF shall send an HTTP response conforming to TS 102 034 [3], clause 5.4.2.

The body of the HTTP response shall contain an XML document with the appropriate SD&S offering record, conforming to TS 102 034 [3], clause 5.2.6.

Available Offering records are:

- The Broadcast Discovery record (clause 5.2.6.2) is a list of IPTV services.
- The Package Discovery record (clause 5.2.6.5) is a list of packages, a package being a list of pointers to services that are advertised in the broadcast discovery record.
- The BCG Discovery record (clause 5.2.6.6) is a list of BCGs, and for each of them the location of the BCG SSF(s) to connect to the BCG server(s) (DVB multicast and unicast modes are available, plus a specific Query mechanism).
  - The type of TV-Anytime content carried in the Payload shall be advertised by the SSF, conforming to TS 102 539 [13], clause 4.1.2.1 table 2.
  - When present, the DVBSTP@Source or the HTTP@Location of the TransportMode parameter in BCG Discovery Record represent respectively the multicast address (when service selection data are multicasted) and the URI (when service selection is done through HTTP) used by the BCG SSF.
  - When using the DVB pull mode without SOAP, the SD&S SSF shall include the Segment information.

6.3.1.4 Delivery of DVB BCG

In case an SSF receives an HTTP request for unicast container-based delivery of DVB BCG data it shall act as a so-called BCG SSF.

6.3.1.4.1 Container-based delivery

When the BCG SSF receives an HTTP GET request, if personalization headers are presents it shall use those headers in order to build a personalized response.

The BCG SSF shall send an HTTP response conforming to TS 102 539 [13], clause 4.1.2.

The body of the HTTP response shall contain an XML document with the appropriate BCG data, conforming to TS 102 539 [13].

Koninklijke KPN NV - Exhibit 2010
Samsung Electronics America, Inc. et al. v. Koninklijke KPN NV PTAB-IPR2025-00502
Page 106 of 237

6.3.1.4.2 Query response

When the BCG SSF receives a BCG Query SOAP message, if personalization headers are present it shall use those headers in order to build a personalized response.

The BCG SSF shall send a SOAP response conforming to TS 102 539 [13], clause 4.2.

6.3.1.5 Delivery of OMA BCAST ESG

In case an SSF receives an HTTP request for unicast delivery of an OMA BCAST ESG it shall act as a so-called ESG SSF.

The procedure for retrieving OMA BCAST service selection information is employed to retrieve one or more Service Guide Delivery Descriptors (SGDD) and/or Service Guide Delivery Units (SGDU). The SGDD describes service level information as well as access information to the Service Guide fragments. The SGDU is the transport-independent network structure for encapsulating Service Guide fragments.

When the ESG SSF receives a HTTP POST request, if personalization headers are presents (in the form of key-value pairs) it shall use those headers in order to build a personalized response. For instance, the ESG SSF may use the provided user identity to retrieve the associated Parental Control Level in the IPTV user profile. This Parental Control Level would then be used to remove non suitable elements from the ESG data that are sent back. The provided user identity may also be used to retrieve a personalized ESG using the method in OMA-TS-BCAST_Service_Guide-V1_0 [6], clause 5.4.3.3.The ESG SSF shall send a HTTP response conforming to OMA-TS-BCAST_Service_Guide-V1_0 [6], clause 5.4.3.1. The body of the HTTP response shall contain an XML document with SGResponse data, conforming to OMA-TS-BCAST_Service_Guide-V1_0, clause 5.4.3.1.1 [6].

6.3.1.6 Delivery of Service Action Data

When receiving HTTP GET request for service action data, the SSF shall evaluate "Payload" parameter in the HTTP query and respond with the appropriate XML document as defined in annex D.

If the "Payload" parameter indicates BC service action Data, the message body carries the following parameters:

- IPTVActionDataCommand shall be set to "Notify".
- Notify shall be set to "IPTVBcActionData".
- BCServiceId is set to the value of the channel previously reported by the UE in BC session information procedure as defined in clause 5.1.3.5.
- If available, the following parameters shall be present: ProgrammeID, Bookmark, BookmarkExpiryTime. It means that a record exists for such a bookmark and that the UE can use it as an N-PVR content.

If the "Payload" parameter indicates CoD service action Data, the message body carries the following parameters:

- IPTVActionDataCommand shall be set to "Notify".
- Notify shall be set to "IPTVCodActionData".
- For each content identified by a CoDId:
  - CoDDelivery status shall be present and set to the value stored for that content;
  - CoDOffset shall be present and set to the value stored for that content.

If the "Payload" parameter indicates N-PVR service action Data, the message body carries the following parameters:

- IPTVActionDataCommand shall be set to "Notify".
- Notify shall be set to "IPTVNpvrActionData".
- For each N-PVR content identified by a NPVRContentId, the following parameters shall be present if available: BCServiceId, RecordStartDate, RecordEnDate, RecordStatus, RecordOffset and RecordExpiryTime shall be present if available.

Koninklijke KPN NV - Exhibit 2010
Samsung Electronics America, Inc. et al. v. Koninklijke KPN NV PTAB-IPR2025-00502
Page 107 of 237

If the "Payload" parameter is set to "ALL", the SSF shall send all available Service Action Data as defined above.

If no information is available for the requested type, the SSF shall answer with an HTTP 404 error code.

6.3.1.7 Delivery of IPTV Content Marker

For fine grained access control, The SSF shall check two parameters:

- *IPTVContentMarkerSourceUser* is generated by other users' IPTVContentMarkerAuthorizedViewUser parameter and indicates that the requesting user can share which users' IPTV Content Marker.
- *ForbiddenViewUser* can be set to the particular IPTV Content Marker by the owner when the owner does not want to share this IPTV Content Marker with specific users included in *IPTVContentMarkerAuthorizedViewUser* parameter

When receiving HTTP request for IPTV Content Markers with the *IPTVInformationDataCommand* parameter set to "Retrieval", the SSF shall extract the User ID and lookup the IPTV Content Marker data associated to that User ID. It shall also examine the IPTV User Profile associated to that User ID in order to look up the *IPTVContentMarkerSourceUser* parameters of the BC, CoD and PVR profiles. The SSF shall attempt to retrieve the IPTV Content Marker data associated with these other users' User ID only if the other users' *IPTVContentMarkerAuthorizedViewUser* parameters of the relevant IPTV service profile indicate the requesting User ID. Additionally, the SSF shall check for each retrieved IPTV Content Marker if the parameter *ForbiddenViewUser* is present. If this *ForbiddenViewUser* parameter is present, the SSF shall check whether the requesting User ID is included in this parameter. If that User ID exists in *ForbiddenViewUser* , the SSF shall remove that particular IPTV Content Marker data from the response data set. After all *ForbiddenViewUser* parameters of all IPTV Content Marker data have been checked, the SSF shall respond with the IPTV Content Markers remaining in the response data set..

The XML document of IPTV Content Markers to indicate a Content Marker Retrieval in HTTP Response is defined in Annex V.

Upon receiving an HTTP based IPTVContentMaker retrieval request, the SSF shall send an HTTP response. The body of the HTTP response shall contain an XML document defined in 6.1.1.7 and contain only data that matches the filter parameters passed in the HTTP request.

6.3.1.8 Delivery of TV-Anytime Phase 2 XML

When the TV-Anytime Phase 2 based SSF receives an HTTP POST request, if personalization headers are present it shall use those headers in order to build a personalized response. For instance, the provided IPTV user profile may be used to retrieve the personalized EPG data. Further, the SSF shall examine the SOAP message carried in the HTTP request and process it according to [49]. It shall process the query, and build a SOAP response compliant with [49]. The SSF shall send that SOAP response to the UE in a HTTP response compliant with [49].

6.4 Stand-Alone XMDS

6.4.1 Procedure for service configuration

6.4.1.1 General

The stand-alone XDMS implements the role of an XCAP server as described in RFC 4825 [9].

6.4.1.2 Manipulation acceptance

The behaviour of a stand-alone XDMS server with regards to XCAP is identical to the behaviour of an SCF as described in clause 6.2.

6.4.1.3 Authentication and authorization

The behaviour of a stand-alone XDMS server with regards to XCAP is identical to the behaviour of an SCF as described in clause 6.2.

Koninklijke KPN NV - Exhibit 2010
Samsung Electronics America, Inc. et al. v. Koninklijke KPN NV PTAB-IPR2025-00502
Page 108 of 237

6.4.1.4 Subscription acceptance and notification of state changes in XML document

A stand-alone XDMS does not support subscriptions to profile changes. Subscriptions to profile changes are directed to the SCF acting as a front-end to the XDMS.

6.5 Media Function (MF)

6.5.1 Procedures for Unicast Content Download

6. 5.1.1 Response of Content Download

Once the MF has received the HTTP GET request from the UE, it should return HTTP response with the content file corresponding to the URL obtained in the received HTTP GET. Also the HTTP "Connection" header shall be set to "Keep-Alive" to indicate it is a persistent TCP connection. The detail can also refer to the single server unicast download as defined in TS 102 034[3] clause 10.6.3.2

NOTE: The Xd interfaces are used for the UE to download the content. And the MCF and MDF are treated as a whole in this release.

7 Procedures using RTSP for IMS-based IPTV

This clause specifies how the playback control, e.g. in the CoD Service, through RTSP is achieved. Two approaches have been identified:

- "Method 1": Clauses 7.1.1 and 7.2.1 describe a protocol which uses a subset of the RTSP methods defined in RFC 2326 [8], interpreting SIP INVITE and SIP BYE as triggers for RTSP Session Initiation and termination.
- "Method 2": Clauses 7.1.2 and 7.2.2 describe a protocol which follows RFC 2326 [8].

7.1 User Equipment (UE)

7.1.1 Procedures for RTSP playback control (Method 1)

7.1.1.1 Introduction

The UE shall support the following RTSP methods for RTSP playback control:

- PLAY (UE to MCF).
- PAUSE (UE to MCF).
- GET_PARAMETER (UE to MCF).
- SET_PARAMETER (UE to MCF).
- ANNOUNCE (MCF to UE).
- OPTION (UE to MCF).

NOTE: The UE is not required to use OPTION method since all the specified methods are mandatory. The OPTION method is included simply to allow for future compatibility and easier introduction of new optional methods.

The methods shall use the same session id as specified in the SDP h-session attribute.

Koninklijke KPN NV - Exhibit 2010
Samsung Electronics America, Inc. et al. v. Koninklijke KPN NV PTAB-IPR2025-00502
Page 109 of 237

7.1.1.2 Media playback initiation procedure

Upon a request to start playback the UE shall send an RTSP PLAY message to the MCF using the h-uri attribute received in the SDP. If a domain address is used in the RTSP URL the UE shall not perform DNS lookup. The IP header for the RTSP PLAY message shall be set to the IP address from the connection line ("c=") in the SDP answer and the port from the media line ("m=").

NOTE: The UE does not perform DNS lookup in order to avoid misaligning the information conveyed in the SDP.

The RTSP fields in the RTSP PLAY message shall be filled as follows:

- The RTSP URL shall be set to the value retrieved from the SDP h-uri attribute in the case of an absolute URI. If the value of h-url is a relative URI that is in the form of a media path, then the RTSP absolute URL is constructed by the UE using the SDP IPAddress (from c-line) and port (from m-line) as the base followed by h-uri value for the media path.
  (e.g. `rtsp://10.5.1.72:22554/TV3/823527`).

- If the h-offset attribute is present in the SDP, then the Range parameter in the first RTSP PLAY message shall be included and set to the value retrieved from this SDP h-offset attribute. Else:

  the Range parameter may be included and set to the value retrieved in the CoD SAD from the SSF in case the user wants to resume a pending CoD at the time it was previously stopped.

- If Range parameter is not sent by the UE, the stream will play from the beginning.

  (e.g. `Range: npt=<OFFSET>-`).

7.1.1.3 Media playback modification procedure

Upon a request to modify playback the UE shall send an RTSP PLAY message with a request to modify the position, speed and/or direction of playback. The UE changes the direction and/or speed of playback by including a `Scale` header or change the position of playback by including a `Range` header.

- Scale header is set as follows:
  - 1 indicates normal play.
  - If not 1, the value corresponds to the rate with respect to normal viewing rate.
  - A negative value indicates reverse direction.

If the request is to pause playback, the UE shall send an RTSP PAUSE message.

7.1.1.4 Media playback information retrieval and setting procedure

Upon a request to retrieve playback information the UE shall send an RTSP GET_PARAMETER message. The UE shall create a message with a content type : text/parameters.

The parameters the UE wants to retrieve shall be set in the body, one parameter per line.The UE may retrieve the following information:

- position:
  - The position in the media in seconds.
- scales:
  - The allowed scales that can be used in the PLAY request.
- duration:
  - The total duration in seconds of the media to be played.

Koninklijke KPN NV - Exhibit 2010
Samsung Electronics America, Inc. et al. v. Koninklijke KPN NV PTAB-IPR2025-00502
Page 110 of 237

If a GET_PARAMETER request contains other parameters than specified here, the MCF shall ignore these parameters. In case the request contains only unspecified parameters the request shall be considered as a request with an empty body.An empty body is allowed for RTSP keep alive.

The UE may also set the position parameter (ex. to jump to a bookmark position within a video) by sending the RTSP SET_PARAMETER message. Any other parameter that is used in SET_PARAMETER request will be rejected by the MCF.

7.1.1.5 Handling of media events

Upon the reception of the RTSP ANNOUNCE with the beginning-of-stream, the end-of-stream or the transition indication the UE may take relevant actions to handle the event (e.g. Terminating session, rewinding the media stream, etc.). The UE shall respond with a RTSP 200 OK.

For BC sessions with trick-play, if the UE receives an RTSP ANNOUNCE request with an end-of-stream indication, the UE may initiate a session modification procedure in order to go back to a normal BC session in multicast mode or may alternatively take other actions (e.g. rewind, pause, terminate session, etc.).

If the UE receives an RTSP ANNOUNCE request with a transition indication, the UE may send an RTSP GET_PARAMETER with parameter scales in order to have the latest valid scale values.

If the UE does not understand any of the headers or the notice-code value in the ANNOUNCE request, it simply shall ignore the request.

7.1.2 Procedure for content control (Method 2)

7.1.2.1 Introduction

After CoD session setup, RTSP as defined in RFC 2326 [8] is used to control media delivery. It includes media setup, media control and media teardown. RTSP header fields shall conform to TS 102 034 [3], clause 6.3.2.

The UE shall support the following RTSP methods:

- DESCRIBE (UE to MCF).
- SETUP (UE to MCF).
- PLAY (UE to MCF).
- PAUSE (UE to MCF).
- TEARDOWN (UE to MCF).
- ANNOUNCE (MCF to UE).

For transport parameters, the ones conveyed over SIP shall always take precedence over the ones conveyed over RTSP.

7.1.2.2 Media description procedure

If UE did not get content delivery description information (from the SSF or from the SCF/MCF during the SIP session initiation), it shall request description of the media via the DESCRIBE message. The RTSP URL to send the DESCRIBE message to is retrieved from the SSF data or from the MCF during the SIP session initiation.

If a domain address is used in the RTSP URL the UE shall not perform DNS lookup. The IP header for the RTSP DESCRIBE message shall be set to the IP address from the connection line ("c=") in the SDP answer and the port from the media line ("m=").

- The RTSP URL shall be set to the value retrieved from the SDP h-uri attribute in the case of an absolute URI. If the value of h-url is a relative URI that is in the form of a media path, then the RTSP absolute URL is constructed by the UE using the SDP IPAddress (from c-line) and port (from m-line) as the base followed by h-uri value for the media path.
  (e.g. rtsp://10.5.1.72:22554/TV3/823527).

Koninklijke KPN NV - Exhibit 2010
Samsung Electronics America, Inc. et al. v. Koninklijke KPN NV PTAB-IPR2025-00502
Page 111 of 237

NOTE: The UE does not perform DNS lookup in order to avoid misaligning the information conveyed in the SDP.

The UE shall include an Accept header in the request with "application/sdp" and "text/xml".

7.1.2.3 Media setup procedure

On sending a SETUP request, the UE shall populate the header fields as follows:

- RTSP URL header shall be set to the a=control parameter if present in the answer to the DESCRIBE sent by the MCF. If not present, RTSP URL shall be set to the corresponding media RTSP URL which has been obtained from the SSF data, or from the CoD session initiation. If a domain address is used in the RTSP URL the UE shall not perform DNS lookup. The IP header for the RTSP SETUP message shall be set to the IP address from the connection line ("c=") in the SDP answer and the port from the media line ("m=").
- CSeq header shall be generated by the UE.

On receiving a SIP 200 OK response to the SETUP request, the UE shall retrieve and store the Session header for issuing the PLAY request later.

7.1.2.4 Media playback initiation procedure

After SETUP request has been acknowledged as successful, UE shall start the playback of the content by sending an RTSP PLAY request.

The UE shall populate the header fields as follows:

- RTSP URL header shall be set to the a=control parameter if present in the answer to the DESCRIBE sent by the MCF. If not present, RTSP URL shall be set to the corresponding media RTSP URL which has been obtained from the SSF data, or from the CoD session initiation. If a domain address is used in the RTSP URL the UE shall not perform DNS lookup. The IP header for the RTSP SETUP message shall be set to the IP address from the connection line ("c=") in the SDP answer and the port from the media line ("m=").
- CSeq header shall be generated by the UE.
- Session header shall be set to the same value as that in the SETUP request.
- If Range header was present in the DESCRIBE response, then the UE shall use it. Otherwise, the UE may include a Range header. If Range header is not sent by the UE, the stream will play from the beginning.

7.1.2.5 Media playback modification procedure

Upon a request to modify playback the UE shall send an RTSP PLAY message with a request to modify the position, speed and/or direction of playback. The UE changes the direction and/or speed of playback by including a `Scale` header or change the position of playback by including a `Range` header.

The UE shall populate the header fields conforming to clause 7.1.2.4 with the following additions:

- Range header is optional.
- Scale header is optional: it is set as follows:
  - 1 indicates normal play.
  - If not 1, the value corresponds to the rate with respect to normal viewing rate.
  - A negative value indicates reverse direction.

If the request is to pause playback, the UE shall send an RTSP PAUSE message.

On sending a PAUSE request, the UE shall populate the header fields as follows:

- RTSP URL header shall be set to the same value as that in the previous PLAY request.
- CSeq header shall be set to the same value as that in the previous PLAY request.

Koninklijke KPN NV - Exhibit 2010
Samsung Electronics America, Inc. et al. v. Koninklijke KPN NV PTAB-IPR2025-00502
Page 112 of 237

- Session header shall be set to the same value as that in the PLAY request.

7.1.2.6 Media teardown procedure

On sending TEARDOWN request, the UE shall populate the header fields as follows:

- RTSP URL header shall be set to the a=control parameter if present in the answer to the DESCRIBE sent by the MCF. If not present, RTSP URL shall be set to the corresponding media RTSP URL which has been obtained from the SSF data, or from the CoD session initiation. If a domain address is used in the RTSP URL the UE shall not perform DNS lookup. The IP header for the RTSP SETUP message shall be set to the IP address from the connection line ("c=") in the SDP answer and the port from the media line ("m=").
- CSeq header shall be generated by the UE.
- Session header shall be set to the same value as that in the SETUP request.

7.1.2.7 Handling of media events

Upon the reception of the RTSP ANNOUNCE with the beginning-of-stream, the end-of-stream or the transition indication the UE may take relevant actions to handle the event (e.g. Terminating session, rewinding the media stream etc.). The UE shall respond with a RTSP 200 OK.

For BC sessions with trick-play, if the UE receives an RTSP ANNOUNCE request with an end-of-stream indication, the UE may initiate a session modification procedure in order to go back to a normal BC session in multicast mode or may alternatively take other actions (e.g. rewind, pause, terminate session etc.).

If the UE receives an RTSP ANNOUNCE request with a transition indication, the UE may send a RTSP GET_PARAMETER with parameter scales in order to have the latest valid scale values.

If the UE does not understand any of the headers or the notice-code value in the ANNOUNCE request, it simply shall ignore the request.

7.1.3 Procedures for Content Switch within a CoD Contentlist

Upon a request for a content switch the UE shall send an RTSP PLAY message to the MCF using the contentlist information received in the SDP. If the UE confirms that the UE and the media server support the "3gpp-switch" feature in the session initiation procedure as described in clause 5.1.16.2 and 5.4.11.2, the UE shall populate the header fields as follows:

- RTSP URL header shall be set to the value received from MF during CoD session initiation.
- Switch-Stream header shall be set by UE:
  - "old-stream" attribute shall be set to RTSP URL of the media stream that is current watchingly being watched.
  - "new-stream" attribute shall be set to RTSP URL of the new media stream that user wants to switch to.

(ex. Switch-Stream:old= rtsp://10.5.1.72:22554/TV3/823527 ; new= rtsp://10.5.1.72:22554/TV3/823528).

NOTE: The syntax of Switch-Stream header is specified in TS 26 234 [50] clause 5.5.4.2.

7.2 Media Control Function (MCF)

7.2.1 Procedures for RTSP playback control (Method 1)

7.2.1.1 Introduction

The MCF shall support the following RTSP methods for RTSP playback control:

Koninklijke KPN NV - Exhibit 2010
Samsung Electronics America, Inc. et al. v. Koninklijke KPN NV PTAB-IPR2025-00502
Page 113 of 237

- PLAY (UE to MCF).
- PAUSE (UE to MCF).
- GET_PARAMETER (UE to MCF).
- SET_PARAMETER (UE to MCF).
- ANNOUNCE (MCF to UE).
- OPTION (UE to MCF).

All other methods that the MCF does not support will result in "405 Method not allowed" reply from the MCF.

The methods shall use the same session id as specified in the SDP h-session attribute.

7.2.1.2 Media Playback Initiation Procedure

Upon successful RTSP PLAY request the MCF responds with a RTSP 200 OK message except for the cases as follows:

- If the requested content is not ready for playing, the MCF shall reply with an RTSP error code 404 Not Found.

The contents of the RTSP 200 OK response shall be as follows:

- CSeq shall be set to the same value as that in the request.
- Date header may be generated by the MCF. It represents the date and time at which the message was originated.
- RTP-Info header may be generated by the MCF when the media packets are transported over the RTP layer. It indicates the RTP-specific parameters. The parameters url and rtptime shall be present. The parameter seq is recommended to be present. For non-MPEG2TS streams, the UE uses the parameter rtptime to calculate the mapping of RTP timestamp to NPT, and the UE may also use the parameter rtptime for inter-media synchronization.

7.2.1.3 Media playback modification procedure

Upon successful RTSP PLAY or PAUSE request the MCF responds with a RTSP 200 OK message.

The contents of the RTSP 200 OK response shall be as follows:

- CSeq shall be set to the same value as that in the request.
- Date header may be generated by the MCF. It represents the date and time at which the message was originated.
- RTP-Info header may be generated by the MCF when the media packets are transported over the RTP layer. It indicates the RTP-specific parameters. The parameters url and rtptime shall be present. The parameter seq is recommended to be present. For non-MPEG2TS streams, the UE uses the parameter rtptime to calculate the mapping of RTP timestamp to NPT, and the UE may also use the parameter rtptime for inter-media synchronization.

7.2.1.4 Media playback information retrieval and setting procedure

Upon successful RTSP GET_PARAMETER or SET_PARAMETER request the MCF responds with a RTSP 200 OK message with the requested values or with the successful setting of a parameter.

7.2.1.5 Handling of media events

Upon receipt of the beginning-of-stream or the end-of-stream indication from MDF, MCF may send an RTSP ANNOUNCE to the UE with an indication that the beginning-of-stream or the end-of-stream has been reached.

Upon reception of the indication from the MDF that there is a transition in the media characteristics, MCF shall send a RTSP ANNOUNCE to the UE with an indication that transition has occurred. The transition of the media

Koninklijke KPN NV - Exhibit 2010
Samsung Electronics America, Inc. et al. v. Koninklijke KPN NV PTAB-IPR2025-00502
Page 114 of 237

characteristics relate to the change in the available playback scales or the current speed of playback. The transition occurs when MDF has a playlist which contains content with playback restrictions. The Range header shall be included to indicate the current position where the transition has taken place. The Scale header shall be included if the value has changed from a previously scale value.

The "Notice" header shall be included with the notice code value set to "2104 Start-of-Stream Reached", "2101 End-of-Stream Reached" or "2103 Transition".

NOTE: The header and code are based draft-stiemerling-rtsp-announce-01 [i.10i.10~~i.10~~]. The use of other event types is outside the scope of the present document.

7.2.2 Procedure for content control (Method 2)

The MCF shall act as a media server as defined in RFC 2326 [8]. RTSP header fields shall conform to TS 102 034 [3], clause 6.3.2. The MCF shall not redirect the RTSP methods using either the REDIRECT method or Redirection status code (3xx).

NOTE: It is recommended that the MCF does not perform redirection to avoid misaligning the information conveyed in the SDP. The problem occurs if the redirected ULR differs from the ones conveyed in the SDP connection and media line is that SIP is used for opening proxies and firewalls for the content control and the content delivery paths.

For transport parameters, the ones conveyed over SIP shall always take precedence over the ones conveyed over RTSP.

7.2.2.1 Introduction

After CoD session setup, RTSP as defined in RFC 2326 [8] is used to control media delivery. It includes media setup, media control and media teardown. RTSP header fields shall conform to TS 102 034 [3], clause 6.3.2.

The MCF shall support the following RTSP methods:

- DESCRIBE (UE to MCF).
- SETUP (UE to MCF).
- PLAY (UE to MCF).
- PAUSE (UE to MCF).
- TEARDOWN (UE to MCF).
- ANNOUNCE (MCF to UE).

All other methods that the MCF does not support will result in "405 Method not allowed" reply from the MCF.

7.2.2.2 Media description procedure

Upon successful RTSP DESCRIBE request the MCF responds with a RTSP 200 OK message.

The DESCRIBE response sent by the MCF shall have:

- Content-type header set to "application/sdp", or
- Content-type header set to "text/xml" and Content-encoding set to "utf8", conforming to TS 102 034 [3], clause 6.3.1.2.

7.2.2.3 Media setup procedure

Upon successful RTSP SETUP request the MCF responds with a RTSP 200 OK message.

The contents of 200 OK response shall be as follows:

- CSeq shall be set to the same value as that in the SETUP request.

Koninklijke KPN NV - Exhibit 2010
Samsung Electronics America, Inc. et al. v. Koninklijke KPN NV PTAB-IPR2025-00502
Page 115 of 237

- Date header may be generated by the MCF. It represents the date and time at which the message was originated.
- Session header is generated by the MCF.
- Transport header contains the transport parameters selected by the MCF.

7.2.2.4 Media playback initiationcontrol procedure

Upon successful RTSP PLAY request the MCF responds with a RTSP 200 OK message.

The contents of the RTSP 200 OK response shall be as follows:

- CSeq shall be set to the same value as that in the request.
- Date header may be generated by the MCF. It represents the date and time at which the message was originated.
- RTP-Info header may be generated by the MCF when the media packets are transported over the RTP layer. It indicates the RTP-specific parameters. The parameters url and rtptime shall be present. The parameter seq is recommended to be present. For non-MPEG2TS streams, the UE uses the parameter rtptime to calculate the mapping of RTP timestamp to NPT, and the UE may also use the parameter rtptime for inter-media synchronization.

7.2.2.5 Media playback modification procedure

Upon successful RTSP control (PLAY, PAUSE) request the MCF responds with a RTSP 200 OK message.

The contents of the RTSP 200 OK response shall be as follows:

- CSeq shall be set to the same value as that in the request.
- Date header may be generated by the MCF. It represents the date and time at which the message was originated.
- RTP-Info header may be generated by the MCF when the media packets are transported over the RTP layer. It indicates the RTP-specific parameters. The parameters url and rtptime shall be present. The parameter seq is recommended to be present. For non-MPEG2TS streams, the UE uses the parameter rtptime to calculate the mapping of RTP timestamp to NPT, and the UE may also use the parameter rtptime for inter-media synchronization.

7.2.2.6 Media teardown procedure

Upon successful RTSP TEARDOWN request the MCF responds with a RTSP 200 OK message.

The contents of 200 OK response shall be as follows:

- CSeq shall be set to the same value as that in the TEARDOWN request.

7.2.2.7 Handling of media events

Upon receipt of the beginning-of-stream or the end-of-stream indication from MDF, MCF shall send an RTSP ANNOUNCE to the UE with an indication that the beginning-of-stream or the end-of-stream has been reached.

Upon reception of the indication from the MDF that there is a transition in the media characteristics, MCF shall may send a RTSP ANNOUNCE to the UE with an indication that transition has occurred. The transition of the media characteristics relate to the change in the available playback scales or the current speed of playback. The transition occurs when MDF has a playlist which contains content with playback restrictions. The Range header shall be included to indicate the current position where the transition has taken place. The Scale header shall be included if the value has changed from a previously scale value.

The "Notice" header shall be included with the notice code value set to "2104 Start-of-Stream Reached","2101 End-of-Stream Reached" or "2103 Transition".

Koninklijke KPN NV - Exhibit 2010
Samsung Electronics America, Inc. et al. v. Koninklijke KPN NV PTAB-IPR2025-00502
Page 116 of 237

NOTE: The header and code are based draft-stiemerling-rtsp-announce-01 [i.10i.10~~i.10~~]. The use of other event types is outside scope of release 2.

7.2.3 Procedures for restricted trick play

On receiving a request from the user to control the playback (e.g. RTSP PLAY, PAUSE, etc) which specified in clause 7.1, the MCF shall examine the request to see whether the playback operation is permitted based on the restricted trick play policy. If the requested playback operation is forbidden by the policy, for example, the user tries to fast forward when an advertisement is showing, the MCF shall disable the request and respond with a RTSP "405 Method Not Allowed" message.

7.2.4 Procedures for inter-destination media synchronization

If RTSP method 2 is used, before the MCF sends a reply to the SC to a DESCRIBE method it shall use the assigned SSRC value to the media stream (see clause 5.4.10.1).

NOTE: The text in clauses 7.1.2.1 and 7.1.2.2 regarding media description procedure applies here.

The MCF shall include in the SDP it sends to the SC:

- a=ssrc:<ssrc-id> <attribute>:<value> as specified in [46]
- a=rtcp:port [nettype space addrtype space connection-address] as specified in [47]
- a=rtcp-xr: grp-sync, sync-group=<SyncGroupId>, see Annex W.2

If an SSRC conflict occurs at the transport level, and the MF has to assign a new SSRC value, the MCF shall send an RTSP announce to the SC containing the new SSRC value as part of the modified SDP.

7.2.5 Procedures for Content Switch within a CoD Contentlist

Upon successful RTSP PLAY request with a Switch-Stream header the MCF responds with a RTSP 200 OK message and replace the old media stream with the new media stream except for the cases as follows:

- If the requested content is not ready for playing, the MCF shall reply with an RTSP error code 404 Not Found.
- If the requested new media stream is not in the playlist, the MCF shall reply with an RTSP error code 406 Not Acceptable

The contents of the RTSP 200 OK response shall be as described in clause 7.2.1.2 for method 1 or clause 7.2.2.4 for method 2.

7.2.6 Procedure for PlayBack following Session Transfer

Following a successful session transfer, the transferee UE can use the IPTV Content Marker received during the session transfer procedures to view the content using any of the methods in sections 7.2

7.2.7 Playlist handling when end of stream is reached

For CoD and a UE-owned play list (CoD content list), when a content that is currently being streamed terminates, the MCF sends to the UE an RTSP ANNOUNCE message with an indication as per [i.9] to indicate End-of Stream reached, 2101.

7.2.8 Procedures for trick play during playlist

Upon reception of an RTSP trick play while streaming a content belonging to a playlist, the MCF translates/maps incoming RTSP commands to the current IPTV content item played out.

Koninklijke KPN NV - Exhibit 2010
Samsung Electronics America, Inc. et al. v. Koninklijke KPN NV PTAB-IPR2025-00502
Page 117 of 237

7.3 Synchronization Client (SC)

7.3.1 Procedures for inter-destination media synchronization

If RTSP method 2 is used, i.e. because the SC did not receive the synchronization information from the MCF via the procedure in clause 5.4.10.1, the SC shall check the SDP for the SSRC identifier and rtcp-parameter containing the MSAS address. It shall use the RTCP address and port number given in the SDP using the rtcp-attribute and not an RTCP port number specified in the reply to the RTSP SETUP message.

When an SSRC conflict occurs at the transport level, the SC shall be prepared to receive an RTSP ANNOUNCE containing a new SSRC value.

8 Procedures using IGMP/MLD for IMS-based IPTV

8.1 User Equipment (UE)

If IPv4 is used for the transport, the UE shall support IGMPv3 as described in RFC 3376 [28].

If IPv6 is used for the transport, the UE shall support MLDv2 as described in RFC 3810 [29].

Backward compatibility rules between the UE and the Transport Function have to be done conforming to RFC 3376 [28], clause 7 and RFC 3810 [29], clause 8.

8.1.1 Procedure for service selection

8.1.1.1 Procedure to start receiving service selection information

When the UE wishes to receive service selection information from the SSF in multicast mode, it shall send an IGMPv3 unsolicited Membership Report or a MLDv2 Multicast Listener Report Message to the Access Node as specified in RFC 3376 [28] and RFC 3810 [29].

The IGMPv3/MLDv2 request shall be populated as follows:

- the type shall be set to 0x22 "v3 Membership Report" for IGMPv3 or to 143 "Version 2 Multicast Listener Report" for MLDv2;
- for IGMPv3, the value of "Number of Group Records" is set to the number of group records present in the request. For MLDv2, the value of "Number of Multicast Address Records" is set to the number of multicast address records present in the request;
- the Group/Multicast Address Records shall be set as follows:
  - "Multicast Address" shall be set to the "Push@MulticastAddress" as specified in the XML document sent by the SDF.
  - If one or more "Push@SourceAddress" elements are present in the XML document sent by the SDF, then:
    - "Record Type" shall be set to ALLOW_NEW_SOURCES with INCLUDE filter mode:
    - the value of "Number of Sources" is set to the number of source addresses present in the group record, i.e. number of "Push@SourceAddress" elements;
    - the "Source Address" fields shall be set to the "Push@SourceAddress" elements.
  - When no "Push@SourceAddress" element is present in the XML document sent by the SDF (i.e. source address filtering is not used):
    - "Record Type" shall be set to CHANGE_TO_EXCLUDE_MODE with no "Source Address" fields.

Koninklijke KPN NV - Exhibit 2010
Samsung Electronics America, Inc. et al. v. Koninklijke KPN NV PTAB-IPR2025-00502
Page 118 of 237

The case when the UE has to use IGMP v2 for compatibility reason (i.e. the network does not support IGMPv3), the UE shall send v2 Membership report, set as follow:

- the type shall be set to 0x16 "v2 Membership Report";
- the Max response time shall be set to 0;
- the Group Address shall be set to the "Push@MulticastAddress" element as specified in the XML document sent by the SDF.

To cover the possibility of the initial Membership Report or Multicast Listener Report being lost or damaged, the UE may resend the request once or twice after short delays. If the UE does not receive service selection data as a result of sending these requests, it shall assume that the data are not available and shall stop attempting to join the multicast group.

8.1.1.2 Procedure to stop receiving service selection information

When the UE wants to stop receiving service selection information from an SSF in multicast mode, it shall send an IGMP v3 Membership Report Message or MLD v2 Multicast Listener Report Message for leaving a multicast group.

The IGMPv3/MLDv2 request shall be populated as follows:

- the type shall be set to 0x22 "v3 Membership Report" for IGMPv3 or to 143 "Version 2 Multicast Listener Report" for MLDv2;
- for IGMPv3, the value of "Number of Group Records" is set to the number of group records present in the request. For MLDv2, the value of "Number of Multicast Address Records" is set to the number of multicast address records present in the request;
- the Group/Multicast Address Records shall be set as follows:
  - "Multicast Address" shall be set to the "Push@MulticastAddress" as specified in the XML document sent by the SDF related to the service selection information that the user does not want to receive anymore.
  - When one or more "Source Address" fields were set in the Join Operation, the same source address list shall be excluded from the listening interface: The "Record Type" shall be set to "BLOCK_OLD_SOURCES" and the "Source Address" fields shall be set to the source list being filtered.
  - If no "Source Address" fields were set in the Join Operation, The "Record Type" shall be set to "CHANGE_TO_INCLUDE_MODE" with an empty source list.

When the UE has to use IGMP v2 for compatibility reason (i.e. the network does not support IGMPv3), the UE shall send v2 Leave, set as follow:

- the type shall be set to 0x17 "Leave Group";
- the Max response time shall be set to 0;
- the Group Address shall be set to the "Push@MulticastAddress" element as specified in the XML document sent by the SDF.

8.1.2 Procedure for BC service

8.1.2.1 Procedure for joining a BC service

After the BC session initiation procedure, when the UE wishes to join a particular BC service, an IGMP unsolicited v3 Membership Report or a MLD v2 Multicast Listener Report Message to the Access Node as specified in RFC 3376 [28] and RFC 3810 [29].

The IGMPv3/MLDv2 request shall be populated as follows:

- the type shall be set to 0x22 "v3 Membership Report" for IGMPv3 or to 143 "Version 2 Multicast Listener Report" for MLDv2;

Koninklijke KPN NV - Exhibit 2010
Samsung Electronics America, Inc. et al. v. Koninklijke KPN NV PTAB-IPR2025-00502
Page 119 of 237

- for IGMPv3, the value of "Number of Group Records" is set to the number of group records present in the request. For MLDv2, the value of "Number of Multicast Address Records" is set to the number of multicast address records present in the request;
- the Group/Multicast Address Records shall be set as follows:
  - "Multicast Address", as obtained from the SSF, shall be set to one of the allowed channels according to the session initiation.
  - When one or more source address elements are present in network parameters received during the BC session initiation procedure or received from the SSF, then:
    - "Record Type" shall be set to ALLOW_NEW_SOURCES with INCLUDE filter mode:
    - the value of "Number of Sources" is set to the number of source addresses present in the group record;
    - the "Source Address" fields shall be set to the source address elements received during the BC session initiation procedure or received from the SSF.
  - If no source address elements are present in network parameters received during the BC session initiation procedure or received from the SSF, (i.e. source address filtering is not used):
    - "Record Type" shall be set to CHANGE_TO_EXCLUDE_MODE with no "Source Address" fields.

When the UE has to use IGMP v2 for compatibility reason (i.e. the network does not support IGMPv3), the UE shall send v2 Membership report, set as follow:

- the type shall be set to 0x16 "v2 Membership Report";
- the Max response time shall be set to 0;
- the Group Address shall be set to the multicast address, as obtained from the SSF. It must be one of the allowed channels according to the session initiation.

To cover the possibility of the initial Membership Report or Multicast Listener Report being lost or damaged, the UE may resend the request once or twice after short delays. If after these attempts no BC media received, and an IGMP v3 Membership Report was sent, the UE shall revert to an IGMP v2 Multicast Listener Report and repeat the above procedure. If the UE does not receive BC media data as a result of sending these requests, it shall assume that the data is not available and shall stop attempting to join the multicast group.

8.1.2.2 Procedure for leaving BC service

When the UE wants to stops receiving content delivery data from the previously selected BC service, it shall send an IGMPv3 Membership Report Message or MLDv2 Multicast Listener Report Message for leaving a multicast group.

The IGMPv3/MLDv2 request shall be populated as follows:

- the type shall be set to 0x22 "v3 Membership Report" forIGMPv3 or to 143 "Version 2 Multicast Listener Report" for MLDv2;
- for IGMPv3, the value of "Number of Group Records" is set to the number of group records present in the request. For MLDv2, the value of "Number of Multicast Address Records" is set to the number of multicast address records present in the request;
- the Group/Multicast Address Records shall be set as follows:
  - "Multicast Address" shall be set to the multicast address of the BC service that the user does not want to receive anymore.
  - When one or more "Source Address" fields were set in the Join Operation, the same source address list shall be excluded from the listening interface: The "Record Type" shall be set to "BLOCK_OLD_SOURCES" and the "Source Address" fields shall be set to the source list being filtered.

Koninklijke KPN NV - Exhibit 2010
Samsung Electronics America, Inc. et al. v. Koninklijke KPN NV PTAB-IPR2025-00502
Page 120 of 237

- If no "Source Address" fields were set in the Join Operation, The "Record Type" shall be set to "CHANGE_TO_INCLUDE_MODE" with an empty source list.

The case when the UE has to use IGMP v2 for compatibility reason (i.e. the network does not support IGMPv3), the UE shall send v2 Leave, set as follow:

- the type shall be set to 0x17 "Leave Group";
- the Max response time shall be set to 0;
- the Group Address shall be set to the multicast address of the BC service the UE wants to leave.

8.1.3 Procedure for Notification service using multicast media path

When the notification service is consumed together with the related BC service, the notification service is described as a separate service from the related BC. In this case, an extension to the BC service mechanism, through the inclusion of a "Network Generated Notification" indicator, is used to identify such a notification service.

The UE shall join a notification service like Procedure for joining a BC service in clause 8.1.2.1, the Group/Multicast Address Records and the Group Address shall be set to the notification multicast address.

The UE shall leave a notification service like Procedure for leaving a BC service in clause 8.1.2.2, the Group/Multicast Address Records and the Group Address shall also be set to the notification multicast address.

8.2 Transport Functions

For IPv4 multicast IPTV service distribution, the network transport functions shall support minimally IGMPv2 or higher. The use of IGMPv3 is recommended, in which case the backwards compatibility rules of RFC 3376 [28], clause 7 shall apply.

For IPv6 multicast IPTV service distribution, the network transport functions shall support minimally MLDv1 or higher. The use of MLDv2 is recommended, in which case the backwards compatibility rules of RFC 3810 [29], clause 8 shall apply.

8.2.1 Receiving IGMP/MLD request corresponding to a join operation

When receiving an IGMP/MLD request corresponding to a join, the ECF/EFF shall check, based on traffic policies, whether the sender of the request is allowed to join the targeted multicast group. If the multicast group is not allowed the ECF/EFF shall ignore the UE request. If the multicast group is allowed, the ECF/EFF may also check whether the resource level specified in the installed policy matches the resource level required by the requested multicast group. In case of a mismatch, the ECF/EFF node may request a new policy by querying the RACS. If fails no new policy is received or the new policy still does not match the request, the ECF/EFF shall ignore the UE request.

Traffic policies may be pre-configured in the ECF/EFF, received from the RACS when the UE attaches to the network (i.e. RACS push model), received from the RACS as a result of an IMS session being established (i.e. RACS push model) or received from the RACS in response to a query from the ECF/EFF (i.e. RACS pull model). Information received from the RACS takes precedence over pre-configured policies. Traffic policies supporting the decisions to forward traffic and traffic policies supporting admission control may be received using the same or different means. Whether the ECF/EFF queries the RACS depend on local policy rules and on the targeted multicast group. The ECF/EFF queries the RACS, by sending a DIAMETER CCR command as defined in TS 183 060 [38].

Field Code Changed

If the targeted multicast group is allowed and the resource reservation procedure is successful the ECF/EFF shall register the UE IP address as member of this multicast group and begin to forward content delivery data to the UE, when available.

If the ECF/EFF does not receive content delivery data from this multicast group yet, it shall subscribe to it.

Koninklijke KPN NV - Exhibit 2010
Samsung Electronics America, Inc. et al. v. Koninklijke KPN NV PTAB-IPR2025-00502
Page 121 of 237

8.2.2 Receiving IGMP/MLD request corresponding to a leave operation

When Receiving IGMP/MLD request corresponding to a leave operation, the ECF/EFF shall stop forwarding data to the UE corresponding to the multicast group indicated in the Leave operation and delete the subscription of the UE IP address to this group. If pull model is used, the ECF/EFF shall inform the RACS of the Leave operation to make the resources available to other services by sending a DIAMETER CCR command as defined in TS 183 060 [38].

Field Code Changed

9 Procedures using DVBSTP for IMS-based IPTV

This clause applies when using DVB-IPTV multicast delivery for service and content guide discovery.

9.1 User Equipment (UE)

9.1.1 Procedure for service selection

9.1.1.1 Request of DVB service discovery and selection data

In the DVB push model of multicast delivery of DVB SD&S data, the UE shall subscribe to the multicast DVBSTP streams identified within the response from the SDF. Refer to clause 8 for multicast connection mechanism.

9.1.1.2 Request of DVB broadband content guide

In the DVB push model of multicast delivery of a DVB BCG data, the UE shall subscribe to the multicast DVBSTP streams identified within the response from the SDF or within the Service Selection information returned by the SSF. Refer to clause 8 for multicast connection mechanism.

9.1.1.3 Use of service selection information

The UE uses service selection information as defined in clause 6.1.1.5.

9.2 Service Selection Function (SSF)

9.2.1 Procedure for service selection

9.2.1.1 Delivery of DVB service discovery and selection data

In the DVB push model of multicast delivery of DVB SD&S data, the DVBSTP protocol shall be used conforming to TS 102 034 [3], clause 5.4.1.

9.2.1.2 Delivery of DVB broadband content guide

In the DVB push model of multicast delivery of a DVB BCG data, the DVBSTP protocol shall be used conforming to TS 102 539 [13], clause 4.1.2.2.1.

10 Procedures using FLUTE for IMS-based IPTV

NOTE: This clause applies when using OMA BCAST multicast delivery for service provider and guide discovery.

Koninklijke KPN NV - Exhibit 2010
Samsung Electronics America, Inc. et al. v. Koninklijke KPN NV PTAB-IPR2025-00502
Page 122 of 237

10.1 User Equipment (UE)

10.1.1 Procedure for service selection

10.1.1.1 Request of OMA BCAST service discovery and selection data

In the OMA BCAST push model of multicast delivery of OMA BCAST ESG provider discovery data, the UE shall subscribe to the FLUTE streams identified within the response from the SDF, conforming to clause 9.2 in TS 102 471 [4] and clause 6 of TS 102 472 [5].

10.1.1.2 Request of OMA BCAST service guide

In the OMA BCAST push model of multicast delivery of an OMA BCAST ESG, the UE shall subscribe to the FLUTE streams identified within the response from SDF or within the Service Selection information returned by the SSF, conforming to TS 102 471 [4], clause 8.1, OMA-TS BCAST_DVB_Adaptation-V1_0 [6], clause 6.3.5 and OMA-TS-BCAST_Service_Guide-V1_0, clause 5.4 [5].

10.1.1.3 Use of service selection information

The UE uses service selection information as defined in clause 6.1.1.5.

10.1.2 Procedure for multicast download

10.1.2.1 Request for multicast download

In the optionally supported multicast content delivery for content download, the UE shall subscribe to the FLUTE streams identified within the service request response, conforming to CDS in TS 102 034 [3] conform to section 10 there.

Editor's Note: The details about acquiring and initiating multicast download have to be contributed to 5.1.18.2. The procedures need to conform to CDS in TS 102 034 [3] and will be similar to the procedures for unicast download (5.1.18.1).

Commented [zhouzp1]: Eugen and Oscar will raise contribution to handle this editor's notes.

10.2 Service Selection Function (SSF)

10.2.1 Procedure for service selection

10.2.1.1 Delivery of OMA BCAST service discovery and selection data

In the OMA BCAST push model of multicast delivery of OMA BCAST ESG provider discovery data, the FLUTE protocol shall be used, conforming to TS 102 471 [4], clause 9.2 and OMA-TS-BCAST_DVB_Adaptation-V1_0, clause 6.3.5 [6].

10.2.1.2 Delivery of OMA BCAST service guide

In the OMA BCAST push model of multicast delivery of an OMA BCAST ESG, the FLUTE protocol shall be used, conforming to TS 102 471 [4], clause 8.1, OMA-TS-BCAST_DVB_Adaptation-V1_0 [6], clause 6.3.5 and OMA-TS-BCAST_Service_Guide-V1_0 [5], clause 5.4.

10.3 Media Delivery Function (MDF)

10.3.1 Procedure for multicast download

If the optional multicast content download is used for the PushCOD it shall be comprised of parts that further specify how FLUTE is used in ETSI TS 102 034 [5] (as in section 10 Content Download Service). The purpose of file delivery

Koninklijke KPN NV - Exhibit 2010
Samsung Electronics America, Inc. et al. v. Koninklijke KPN NV PTAB-IPR2025-00502
Page 123 of 237

is to deliver content items in files. A file may contain any type of data (e.g. Audio/Video file, Binary data, still images, Text).

11 Procedures using UDP/RTP/RTCP for IMS-based IPTV

The IPTV content is transported over the IP network. In order to do so, several encapsulation are possible:

- MPEG2TS: the content is encapsulated into MPEG2TS packets:
  - MPEG2TS over UDP: the MPEG2TS packets are directly transported over the UDP layer.
  - MPEG2TS over RTP: the MPEG2TS packets are transported over the RTP layer.
- Direct RTP: no MPEG2TS encapsulation is used, the Elementary streams are directly transported over the RTP layer.

11.1 User Equipment (UE)

11.1.1 Procedure for real-time transport

The UE shall support at least one of the following transport technologies:

- MPEG2TS encapsulation.
- Direct RTP transport.

11.1.1.1 Transport using MPEG2TS

The UE may be able to receive the content encapsulated in MPEG2TS packets.

When using the MPEG2TS encapsulation technology, the UE shall support both:

- MPEG2TS over UDP conforming to TS 102 034 [3], clause 7.1.2.
- MPEG2TS over RTP conforming to TS 102 034 [3], clause 7.1.1 excluding clause 7.1.1.1.
  - As specified in ES 283 003 [20], it is possible to negotiate RTCP bandwidth - and thus to control UE receiver report generation - for unicast IPTV services during SIP session setup.

NOTE 1: Handling of RTCP Receiver reports for BC services is out of scope of the present document.

NOTE 2: The default behaviour in the case that - for m-lines indicating RTP/RTCP usage - no RTCP bandwidth negotiation is performed, is described in ES 283 003 [20].

11.1.1.2 Transport using direct RTP encapsulation

The UE may be able to receive the content directly over the RTP layer (e.g. H264 over RTP).

As specified in ES 283 003 [20], it is possible to negotiate RTCP bandwidth - and thus to control UE receiver report generation - for unicast IPTV services during SIP session setup.

NOTE 1: Handling of RTCP Receiver reports for BC services is out of scope of the present document.

NOTE 2: The default behaviour in the case that - for m-lines indicating RTP/RTCP usage - no RTCP bandwidth negotiation is performed, is described in ES 283 003 [20].

Koninklijke KPN NV - Exhibit 2010
Samsung Electronics America, Inc. et al. v. Koninklijke KPN NV PTAB-IPR2025-00502
Page 124 of 237

11.1.2 Procedure for real-time transport eError correction

The UE may support a transport error correction mechanism.

11.1.2.1 Unidirectional transport error correction

When unidirectional transport error correction is used, the UE shall be able to receive an application Layer FEC, conforming to TS 102 034 [3], annex E.

NOTE: Only the base layer of the DVB-IP AL-FEC is supported in the present document, the enhancement layer support is out of scope.

11.2 Media Delivery Function (MDF)

11.2.1 Procedure for real-time transport

The MDF shall send the content using one of the following transport technologies:

- MPEG2TS encapsulation.
- Direct RTP transport.

11.2.1.1 Transport using MPEG2TS

The MDF may be able to send the content encapsulated into MPEG2-TS.In that case, one of the following shall be used:

- The transport of the IPTV content within MPEG2TS layer over RTP shall be done conforming to TS 102 034 [3], clause 7.1.1.
- The transport of the IPTV content within MPEG2TS layer over UDP shall be done conforming to TS 102 034 [3], clause 7.1.2.

11.2.1.2 Transport using direct RTP encapsulation

The MDF may be able to send the content directly over the RTP layer (e.g. H264 over RTP).

11.2.2 Procedure for real-time transport error correction

The MDF may support a transport error correction mechanism.

11.2.2.1 Unidirectional transport error correction

For unidirectional transport error correction the MDF shall use an application Layer FEC mechanism, conforming to TS 102 034 [3], annex E.

NOTE: Only the base layer of the DVB-IP AL-FEC is supported in the present document, the enhancement layer support is out of scope.

11.2.3 Procedures for inter-destination media synchronization

The use of inter-destination media synchronization requires the MDF to support transport using either MPEG2TS layer over RTP, see clause 11.2.1.1., or direct RTP encapsulation, see clause 11.2.1.2.

Koninklijke KPN NV - Exhibit 2010
Samsung Electronics America, Inc. et al. v. Koninklijke KPN NV PTAB-IPR2025-00502
Page 125 of 237

11.3 Synchronization Client (SC)

11.3.1 Procedure for real-time transport

The SC shall support at least one of the following transport technologies:

- MPEG2TS encapsulation.
- Direct RTP transport.

11.3.1.1 Transport using MPEG2TS

The SC may be able to process content that is encapsulated in MPEG2TS packets.

When using the MPEG2TS encapsulation technology, the SC shall support MPEG2TS over RTP as described in clause 11.1.1.1.

NOTE: The limitation to MPEG2TS over RTP is necessary since RTCP is used.

NOTE: As specified in ES 283 003 [20], it is possible to negotiate RTCP bandwidth - and thus to control SC receiver report generation - for unicast IPTV services during SIP session setup.

The SC shall support RTCP Extensions for Single-Source Multicast Sessions (i.e. BC services) with Unicast Feedback [43].

11.3.1.2 Transport using direct RTP encapsulation

The SC may be able to process content that is transported directly over the RTP layer (e.g. H264 over RTP).

As specified in ES 283 003 [20], it is possible to negotiate RTCP bandwidth - and thus to control SC receiver report generation - for unicast IPTV services during SIP session setup.

The SC shall support RTCP Extensions for Single-Source Multicast Sessions (i.e. BC services) with Unicast Feedback as specified in [43]

11.3.2 Procedures for inter-destination media synchronization

The SC shall send RTCP Receiver Reports (RRs) to media-level MSAS address, which is the specified IP address and port number in the SDP description or to a pre-configured media-level MSAS address in case of mapping the UE on a Transport Processing Function, see clause 4.2.8.

The SC shall extend the RRs with synchronization status information, using an RTCP eXtended Report (XR), as specified in Annex W.1. The synchronization status information shall include the SSRC of source, the Packet Received NTP timestamp and the Packet Received RTP timestamp. It should include thePacket Presented NTP timestamp

The SC shall populate the Media Stream Correlation Identifier with the SyncGroupId parameter as specified in Annex W.1.

The SC shall be able to receive RTCP reports from the MSAS, on the regular RTCP receive port.

The SC shall be able to receive RTCP eXtended Reports (XR) containing synchronization settings instructions, as specified in Annex W.1. The RTCP XRs with synchronization settings instructions shall include the SSRC of source, and packet arrival time information, specifically the reference Packet Received NTP timestamp and the reference Packet Received RTP timestamp receipt time stamp. It should include the reference Packet Presented NTP timestamp. These RTCP XRs may be both appended to RTCP Sender Reports (SRs), but may also be received separately.

NOTE: Synchronization settings instructions may be interpreted as the synchronization status information of a virtual SC to which this SC may try to synchronize.

The SC shall be NTP synchronized [58].

Koninklijke KPN NV - Exhibit 2010
Samsung Electronics America, Inc. et al. v. Koninklijke KPN NV PTAB-IPR2025-00502
Page 126 of 237

NOTE: The quality of the underlying NTP synchronization of SCs is a determining factor in inter-destination media synchronization. ITU-T G.114 [i.8] recommends maximum one-way transmission time for an international telephone connection to achieve transparent interactivity. G.114 contains the following statements: "if delays can be kept below [150 ms], most applications, both speech and non-speech, will experience essentially transparent interactivity" and "delays above 400 ms are unacceptable for general network planning purposes". As the purpose of inter-destination media synchronization is typically achieving transparent interactivity (see also TS 181 016 [63] annex A.9.6), the G.114 recommendation is a useful guideline.

The SC shall not require to receive any RTCP eXtended Reports (XR) containing synchronization settings instructions. The absence of such instructions shall not be taken as a sign that something is wrong.

NOTE: The SC may not receive synchronization settings instructions because RTCP is normally transported using the unreliable UDP protocol. The SC may also not receive any instructions if it is the most delayed SC in its synchronization group, if it is the only member of its group or if buffering is carried out in the ECF/EFF, see clause 11.5.1.

If the SC is co-located with the MSAS, then the exchange of synchronization status information and synchronization settings instructions is internal to the functional entity in which they reside.

NOTE: An example of co-located SC+MSAS functionality is when UEs exchange synchronization status information and synchronization settings instructions over an existing direct communication channel, see Annex A.5.2.3.

NOTE: The algorithm that is used by the SC to synchronize the media based on the synchronization settings instructions is a vendor implementation decision. See [i.6] for an overview of techniques.

11.4 Media Synchronization Application Server (MSAS)

11.4.1 Procedures for inter-destination media synchronization

In the case of synchronization for a broadcast stream, the MSAS shall function as a Feedback Target, specified in [43]. Before forwarding RTCP Receiver Reports to the appropriate MF, the MSAS shall read and remove RTCP eXtended Reports containing synchronization status information, which are specified in Annex W. The MSAS shall send synchronization settings instructions to the SC using RTCP eXtended Reports, which are specified in Annex W.

The synchronization settings instructions take the form of RTP timestamps, combined with NTP timestamps. The NTP timestamp indicates the clock shared by the synchronization group, the RTP time stamps indicate the expected receipt and/or presentation time. The MSAS shall send expected receipt times. It should send expected presentation time stamps.

NOTE: Synchronization settings instructions may be interpreted as the synchronization status information of a virtual SC to which the addressed SCs may try to synchronize.

NOTE: The algorithm that is used by the MSAS to derive the synchronization settings instructions from the received synchronization status information is a vendor implementation decision. See [i.6] for an overview of techniques.

For synchronization of Content on Demand or other unicast streams, the MSAS shall forward RTCP Receiver Reports to the appropriate MF. Before forwarding RTCP Receiver Reports, the MSAS shall read and remove RTCP eXtended Reports containing synchronization status information, which are specified in Annex W. The MSAS shall forward RTCP Sender Reports to the appropriate SC, appending synchronization settings instructions to the SC using RTCP eXtended Report. The MSAS may send synchronization settings instructions to the SC using a separate RTCP XR. The RTCP XR for sending synchronization settings instructions is specified in Annex W.

In case of synchronization in the presence of functional entities that modify or re-originate media streams (e.g. a transcoder or a mixer in an MDF), the MSAS shall function as a Third Party Monitor [44]. It shall be able to receive and process synchronization correlation information as specified in clause 11.6.2.

NOTE: Synchronization correlation information enables an MSAS to correlate the timing of two related media streams. By using NTP time as a reference, the MSAS can determine which RTP timestamp of the one media stream corresponds with which RTP timestamp of the other media stream.

Koninklijke KPN NV - Exhibit 2010
Samsung Electronics America, Inc. et al. v. Koninklijke KPN NV PTAB-IPR2025-00502
Page 127 of 237

For scalability, the MSAS may consist of multiple entities organized in a hierarchical way. A "proxy" MSAS may aggregate synchronization status information of multiple SCs by forwarding only the status information of the most delayed SC in a synchronization group to an MSAS that is located hierarchically up the chain. If a "proxy" MSAS aggregates information in this manner, it shall keep track of the SCs that are part of the synchronization group, and it shall relay synchronization settings instructions to the different SCs.

NOTE: [43] specifies that 'the Feedback Target instances MAY be organized in arbitrary topological structures: in parallel, hierarchical, or chained'. Such topological structures can be used for aggregation purposes to improve scalability.

11.5 ECF/EFF

11.5.1 Procedures for inter-destination media synchronization

In one mapping of the SC is an adjunct function that may be co-resident with any of the appropriate elements of the Transport Processing Function, see clause 4.2.8. If the SC is an adjunct function of the ECF/EFF, then ECF/EFF shall

- send synchronization status information to the MSAS using an RTCP eXtended Report (XR) , as specified in Annex W.
- be able to receive RTCP eXtended Reports (XR) containing synchronization settings instructions, as specified in Annex W.

The ECF/EFF may have partial SC functionality, supporting SC functionality in the UE. This requires that the SC in the ECF/EFF is in the path between the UE and the MSAS used. In this case the ECF/EFF shall be able to:

- Monitor and possibly adjust synchronization status reports going from UE to MSAS. Reported arrival times need to be adjusted for the current buffer time the ECF/EFF has introduced.
- Determine the arrival time for the indicated stream at the SC in the ECF/EFF.
- Intercept and carry out synchronization settings instructions. Synchronization settings instructions may or may not be forwarded to the SC in the UE.

NOTE: Combining an SC in a UE with an SC in the ECF/EFF may have advantages for channel changing times and synchronization accuracy. When buffering at a UE, channel changing times during the use of a shared service session may be quite large if one of the participants is severely lagging behind the others. Buffering in the ECF/EFF can reduce channel changing times. This requires the ECF/EFF to pre-buffer the channel to which the UE is changing. Furthermore, if buffering is applied in the ECF/EFF, measurements from a UE can be used to increase synchronization accuracy.

11.6 Synchronization Client' (SC')

11.6.1 Procedure for real-time transport

Clause 11.3.1 is also applicable to SC'.

11.6.2 Procedures for inter-destination media synchronization

The SC' shall send synchronization correlation information to the MSAS, which acts as a Third Party Monitor [44] with respect to the SC'. Synchronization correlation information has the following components.

- RTCP eXtended Report (XR) related to the incoming media stream
- RTCP eXtended Report (XR) related to the outgoing media stream

XR related to the incoming media steam is specified in annex W. The XR contains the SSRC of the incoming media stream, the NTP timestamp and the Packet Received RTP timestamp. The Packet Presented RTP timestamp field shall be set empty.

Koninklijke KPN NV - Exhibit 2010
Samsung Electronics America, Inc. et al. v. Koninklijke KPN NV PTAB-IPR2025-00502
Page 128 of 237

XR related to the outgoing media stream is specified in annex W. The XR contains the SSRC of the outgoing media stream, the NTP timestamp and the RTP time stamp. The Packet Presented RTP timestamp field shall be set empty.

12 IPTV user profile schema

The IPTV user profile is described by an XML document. This XML document complies with the XML schema defined in annex C.

Although it is not explicit in the XML schema described in annex C, the IPTV user profile must comprise at least one BC profile or CoD profile.

The "Global Settings" element is set to "optional" in the IPTV user profile. However, in the case where this element would not be provided, default values should be used:

- the User Action Recordable Boolean should be assumed to be set to "false";
- the preferred language value should be assumed to be to one that is globally defined by the service provider (hence applicable to all users).

In the case where the ParentalControlLevel is not provided, its value is assumed to be the default level defined by the service provider (hence applicable to all users).

In the case where the quality definition is not provided, its default value shall be "SD".

13 IPTV service action data schema

For convenience purposes, each object class of the IPTV service action data is described by a separate XML documents. Those XML document comply with the XML schema defined in annex D.

Although they are defined as optional in the XML schema described for "NPVR items" in annex D, the "BCServiceId", "RecordStartDate" and "RecordEndDate" attributes are required in the case where the NPVRContentID attribute does not refer to a Programme Id (i.e. an entry in the EPG).

Bookmark and RecordStartDate attributes shall either take the form of an xs:dateTime type, or be equal to "NOW".

Koninklijke KPN NV - Exhibit 2010
Samsung Electronics America, Inc. et al. v. Koninklijke KPN NV PTAB-IPR2025-00502
Page 129 of 237

Annex A (informative): Functional entity relations and example signalling flows of IMS based IPTV operations

A.0 Example signalling flows for IPTV services

Any signalling flow in annex A shall follow procedures implementation details described in procedures sections (section from 5 to 11). Signalling flows listed in this section are only informative examples for selected IPTV services. If signalling flows for other IPTV services are not explicitly mentioned in annex A then signalling flows should follow procedures as described in [2] section 8.

A.1 Functional entities relations and overview of the IMS based IPTV procedures

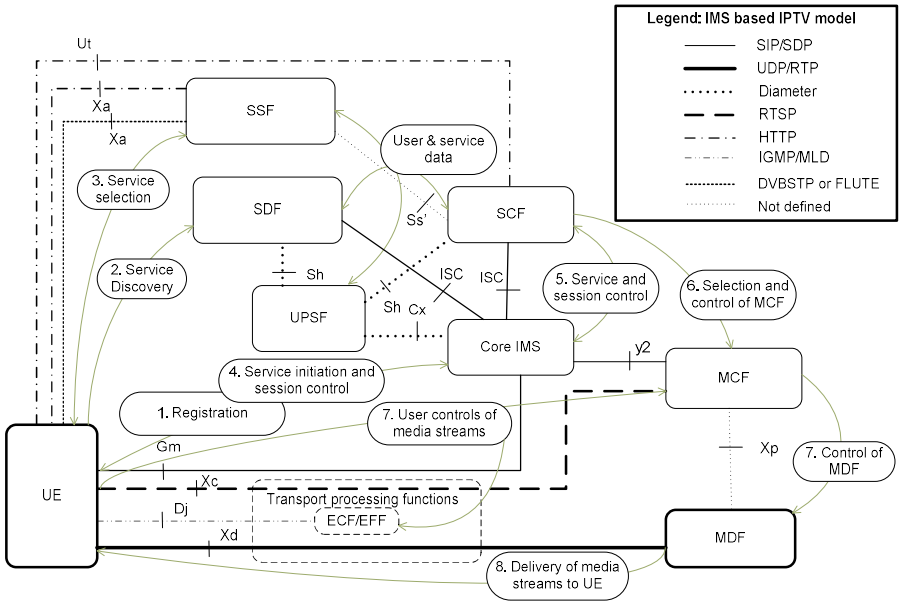

NOTE 1: Figure A.1 represents relationships and protocols between the functional entities at high level. The details of corresponding procedures and signalling flows are in the following clauses of this annex.

NOTE 2: As described in TS 182 027 [2], clause 6.4 and 6.5, Xc and Xd are logical reference points that can be decomposed of Dj and possibly Di, Ds or Iz reference points depending on the location of the MCF or MDF.

Figure A.1: IMS based IPTV - protocol model with FE relation

0) First of all it is needed to start or boot a UE (like a set-top-box, PC, mobile or any device with an IPTV client) and achieve network attachment to obtain network parameters (like an IP address, P-CSCF address, etc.).

Koninklijke KPN NV - Exhibit 2010
Samsung Electronics America, Inc. et al. v. Koninklijke KPN NV PTAB-IPR2025-00502
Page 130 of 237

1) After network attachment the UE initiate the IMS registration process with core IMS (as described in clause 5.1.1).

2) UE will perform IPTV service attachment functions including SIP based service discovery to perform SDF tasks (as described in clause 5.1.2).

3) Then UE is able to initiate the service selection procedures with SSF via Xa (using HTTP over Xa as described in clause 6.1.1, using DVBSTP as in clause 9 or FLUTE 10) to receive service selection information.

4) The IMS based IPTV UE needs to know and used received service selection information to establish appropriate multimedia session by generating SIP INVITE messages during service initiation procedure (over Gm towards home C-CSCF) send via IMS core to SCF.

NOTE 1: SIP based request for service initiation (SIP procedures is applicable also for service termination or termination) is used for BC service (as in clause 5.1.3), CoD service (as in clause 5.1.4) or for N-PVR Service (as in clause 5.1.7).

NOTE 2: The core IMS is able to initiate resource reservation process for network resources needed by the IPTV streams according to the capabilities of the UE. The resource reservation and allocation is performed using standardized transport control functions of NGN RACS connected to the core IMS.

5) to 6) After the successful session initiation, the SCF informs the MCF via core IMS and y2 interface (or UE in some case like BC) about identification of selected content from the Media Delivery Function (or ECF/EFF in the case of BC services) to initiate start streaming the selected multimedia content (CoD, N-PVR).

7) The UE may control CoD media stream over the Xc (see note 2 for figure A.1) interface (between the UE and the MCF) to control media delivery with RTSP protocol (as in clause 7). The UE may control BC media stream over the Dj interface (between the UE and the ECF/EFF) to control media delivery with IGMP/MLD protocol (as in clause 8).

8) The MDF performs media delivery over the Xd (see note 2 for figure A.1) interface is based on UDP/RTP stream delivery and several transport variants (as described in clause 11).

A.2 Example signalling flows of service discovery operation

A.2.1 Push mode

This clause describes an example of signalling flow of the service discovery based on the Push mode.

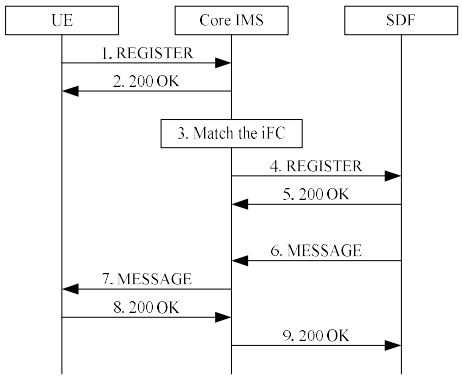

Figure A.2: Service discovery of Push mode operation

Koninklijke KPN NV - Exhibit 2010
Samsung Electronics America, Inc. et al. v. Koninklijke KPN NV PTAB-IPR2025-00502
Page 131 of 237

1) The UE sends a REGISTER request to the Core IMS.

2) Core IMS finishs the registration, and sends the SIP 200 OK to the UE.

3) Core IMS matches the iFC of the service profile belong to the user, and finds out the SDF that user has subscribed.

4) Core IMS sends the third-party REGISTER request to the SDF.

5) The SDF acquires the register status of the UE, and sends the SIP 200 OK to the Core IMS.

6) The SDF sends the Service Attachment Information to the UE by the SIP MESSAGE request. The SDF could trigger service discovery logic, and configure the appropriate service attachment information for the user. Here the SDF could retrieve the user's location, UE's capability etc from IPTV user profile. for configure the service attachment information.

7) The Core IMS relays the SIP MESSAGE to the UE.

8) The UE receives the SIP MESSAGE with Service Attachment Information, and sends the SIP 200 OK to the SDF.

9) The Core IMS relays the SIP 200 OK to the SDF.

A.2.2 Pull Mode

This clause describes an example of signalling flow of the service discovery based on the Pull mode.

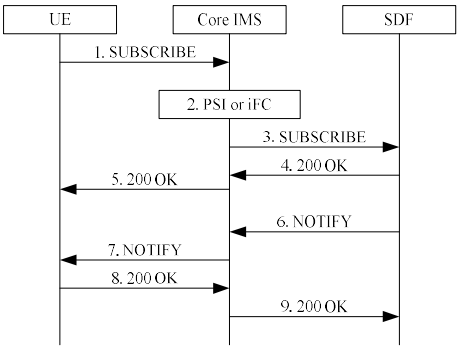

NOTE: The UE may retrieve the PSI/address of the SDF based on mechanisms defined in annex I.

Figure A.3: Service discovery of Pull mode operation

1) The UE sends a SUBSCRIBE request to the Core IMS. The SUBSCRIBE could also contain a body to carry the UE's capabilities.

2) to 3) The Core IMS forwards the SUBSCRIBE to the SDF. The Core IMS could forwards the SUBSCRIBE based on the PSI or iFC.

4) After a successful subscription, the SDF generates a SIP 200 OK in response to the SUBSCRIBE. When the SUBSCRIBE carry the UE's capabilities in the message body, the SDF examines and records UE capabilities information as part of the IPTV user profile data.

5) The Core IMS relays the SIP 200 OK to the UE.

6) The SDF generates the NOTIFY for the service attachment information. The SDF could retrieve the UE's capabilities to generate the personalized service attachment information.

7) The Core IMS relays the NOTIFY to the UE.

Koninklijke KPN NV - Exhibit 2010
Samsung Electronics America, Inc. et al. v. Koninklijke KPN NV PTAB-IPR2025-00502
Page 132 of 237

8) The UE receives the NOTIFY with the service attachment information, and sends the SIP 200 OK to the SDF.

9) The Core IMS relays the SIP 200 OK to the SDF.

A.3 Example signalling flows of CoD operation

A.3.1 UE-initiated session initiation

NOTE: As stated in TS 182 027 [2], the SCF may originate requests to the MF without involving the core-IMS.

A.3.1.1 Session initiation flows for case of establishing content control channel and content delivery channels separately using RTSP method 2

This clause describes an example signalling flow using RTSP method 2, see clause 5.4.1.2.2, 7.1.2 and 7.2.2.

Koninklijke KPN NV - Exhibit 2010
Samsung Electronics America, Inc. et al. v. Koninklijke KPN NV PTAB-IPR2025-00502
Page 133 of 237

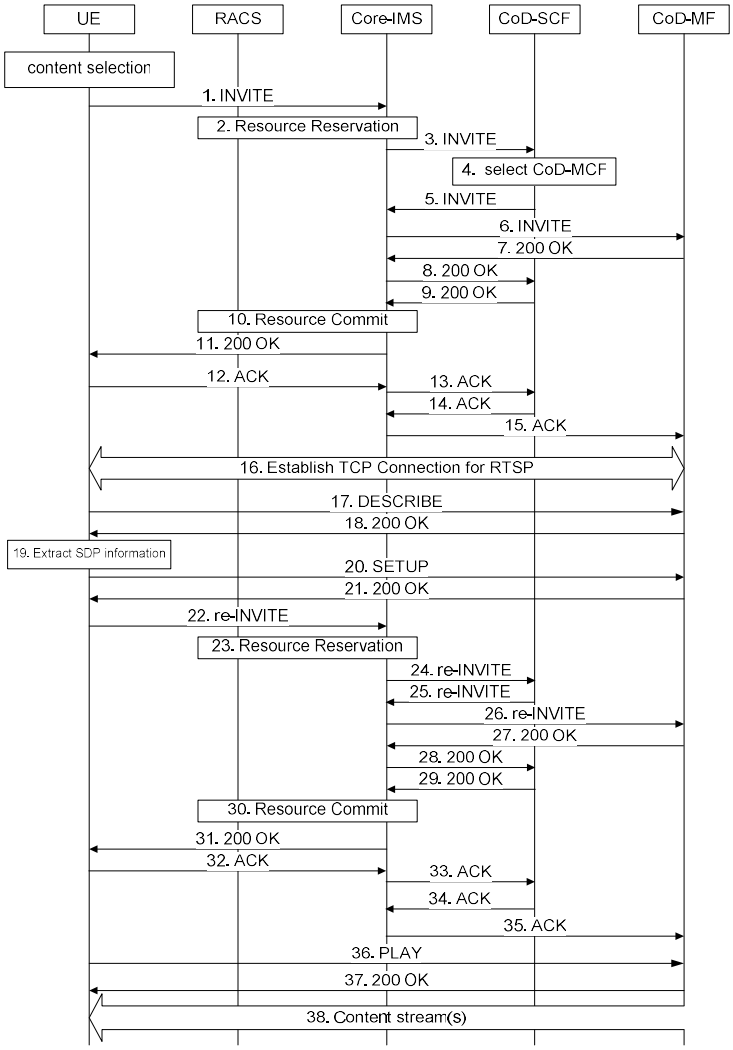

NOTE 1: The procedure and flow between the CoD-MCF and CoD-MDF is out of scope of the current release.
NOTE 2: After successful authorization of the service initiation request, the delivery of the keying data (with security metadata) to the UE may be initiated. This would be done in accordance to the media content protection model for IPTV as described in TS 187 003 [10].

Figure A.4

1) Initial INVITE request to Core-IMS. The INVITE offers a SDP of a media description for RTSP connection.

2) Core-IMS requires for RACS to reserve resources of RTSP connection according to the Initial INVITE.

3) Core-IMS forwards the Initial INVITE to the CoD-SCF.

4) When the CoD-SCF receives the Initial INVITE request from the UE, the CoD-SCF may perform service authorization. The CoD-SCF selects a CoD-MF.

Koninklijke KPN NV - Exhibit 2010
Samsung Electronics America, Inc. et al. v. Koninklijke KPN NV PTAB-IPR2025-00502
Page 134 of 237

5) to 6) The initial INVITE request is sent to the CoD-MF selected by the CoD-SCF.

7) to 9) SIP 200 OK for Initial INVITE is sent from CoD-MF to the Core-IMS.

10) Core-IMS requires for RACS to commit the reservation.

11) SIP 200 OK response is sent back to the UE.

12) to 15) The UE sends ACK to CoD-MF.

16) A TCP connection for RTSP is established.

17) Since a SIP dialog is established and a TCP connection for RTSP is established, the UE invokes RTSP DESCRIBE request to the CoD-MF through the established TCP connection.

18) The CoD-MF sends a SIP 200 OK with SDP. The SDP contains the media descriptions of RTP stream to be used.

19) The UE extracts the media descriptions from the SDP of the SIP 200 OK.

20) The UE sends RTSP SETUP requests to the CoD-MF through the established TCP connection.

21) SIP 200 OK for SETUP is sent back to the UE.

22) The UE sends a re-INVITE request to Core-IMS. The SDP of re-INVITE contains as follows:

- The session description and media description for RTSP are same as that of Initial INVITE.
- The media descriptions for RTP content stream(s) are same as the media descriptions of SIP 200 OK (DESCRIBE) except for address, port number, and direction attribute. The address and port number are replaced by that of UE's, and "a=recvonly" direction attribute is inserted.

23) Core-IMS requires for RACS to reserve additional resources of RTP streams according to the re-INVITE.

24) to 26) re-INVITE is sent to CoD-MF.

27) to 29) SIP 200 OK for re-INVITE is sent back to UE.

30) Core-IMS requires for RACS to commit the reservation.

31) SIP 200 OK for re-INVITE is sent back to the UE.

32) to 35) The UE sends ACK to CoD-MF.

36) RTSP PLAY request is sent to the CoD-MF.

37) SIP 200 OK for PLAY is sent back to the UE.

38) The CoD-MF starts sending RTP content streams to the UE.

Koninklijke KPN NV - Exhibit 2010
Samsung Electronics America, Inc. et al. v. Koninklijke KPN NV PTAB-IPR2025-00502
Page 135 of 237

A.3.1.2 Session initiation flows for case of establishing content control channel and content delivery channels using RTSP method 2

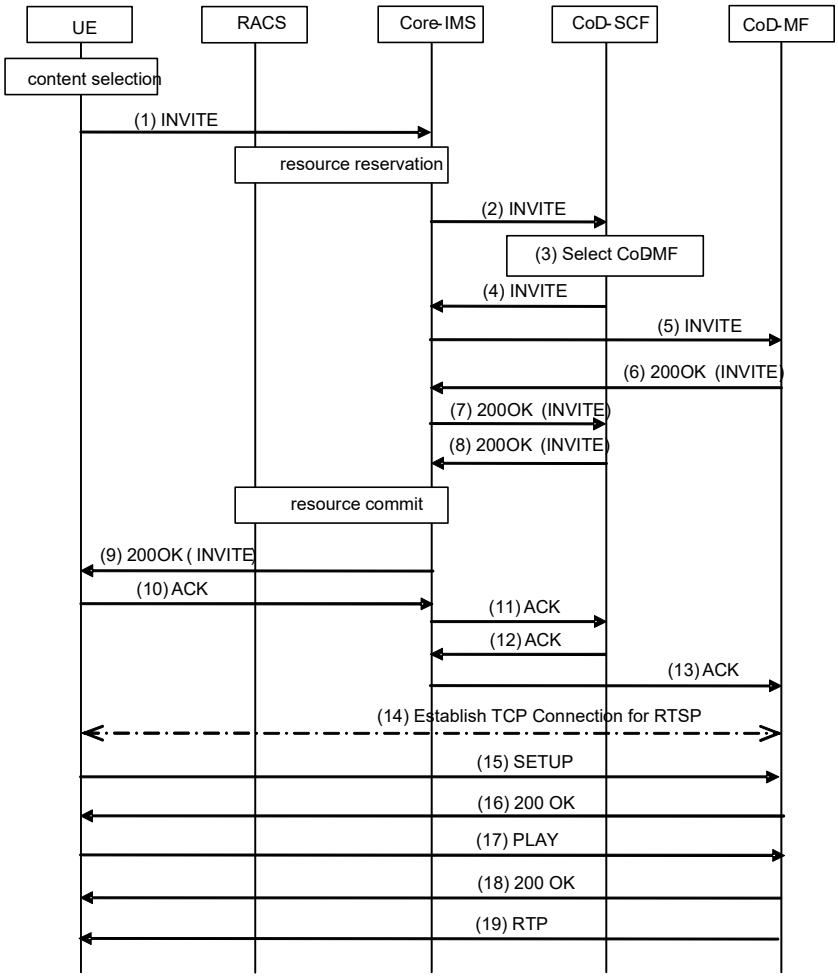

Figure A.5

1) to 2) The UE sends the initial SIP INVITE request to the SCF.

3) The SCF can deny service requests packages depending on operator policy e.g. based on UE location (provided by the NASS), UE capabilities or the User Profile. The SCF selects the appropriate MF.

4) to 5) The SCF sends initial SIP INVITE request to the selected MF.

6) to 9) SIP 200 OK of initial SIP INVITE is sent back to the UE as for final session agreement.

10) to 13) SIP ACK is sent back to the MF.

Koninklijke KPN NV - Exhibit 2010
Samsung Electronics America, Inc. et al. v. Koninklijke KPN NV PTAB-IPR2025-00502
Page 136 of 237

14) TCP connection for the RTSP content control channel is established between the UE and the MF. The UE detects that the RTSP related SDP data negotiated during the preceding steps. If the RTSP session ID parameter is missing in this SDP, as described in clause 5.1.4.2.1, the UE knows that no RTSP session exists at the MF. Therefore the UE will use RTSP SETUP to trigger RTSP session initiation.

15) The UE sends an RTSP SETUP request to the MF.

16) RTSP 200 OK for RTSP SETUP is sent back to the UE. The RTSP network parameters exchanged during steps 15 and 16 equal the RTSP network parameters as agreed in steps 1 to 13. If the MF or the UE detect deviating parameters they react with appropriate error messages and terminate SIP and RTSP sessions.

17) RTSP PLAY request is sent to the MF.

18) RTSP 200 OK for RTSP PLAY is sent back to the UE.

19) The RTP stream is sent to the client IP address as indicated by SIP SDP and RTSP SETUP.

A.3.1A SCF-initiated session initiation

The procedures for SCF-initiated CoD session are based on IETF RFC3725 - Best Current Practices for Third Party Call Control (3pcc) in the Session Initiation Protocol (SIP), Flow I., see Figure A.X

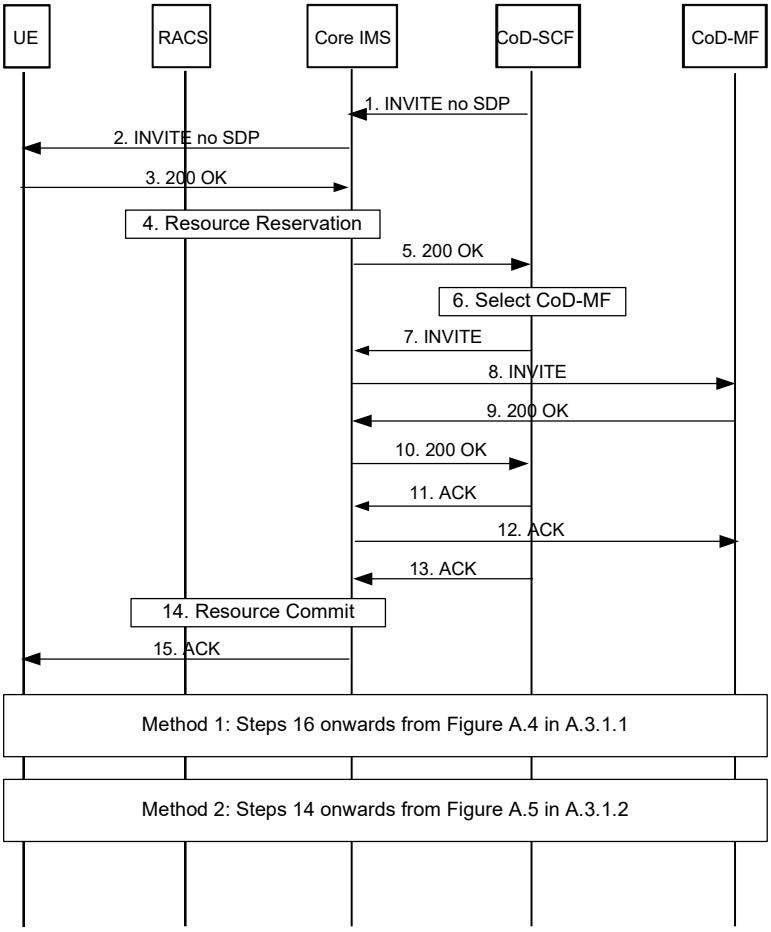

Koninklijke KPN NV - Exhibit 2010
Samsung Electronics America, Inc. et al. v. Koninklijke KPN NV PTAB-IPR2025-00502
Page 137 of 237

Figure A.5A - SCF-initiated CoD session

1) The SCF sends an initial INVITE to the Core IMS. For example when a user has preselected content.

2) The INVITE is forwarded to the UE

3) The UE accepts the INVITE and send a SIP 200 OK to the Core IMS

4) The Core IMS reserves resources based on the SDP offer from the UE

5) The Core IMS forwards the SIP 200 OK to the SCF

6) The SCF selects a CoD-MF

7) The SCF sends an INVITE with the offer of the UE to the selected MF through the Core IMS

8) The Core IMS forwards the INVITE to the MF

9) The MF accepts the request and sends a SIP 200 OK with an SDP answer to the Core IMS

10) The Core IMS forwards the SIP 200 OK to the SCF

11) The SCF sends an ACK to the MF through the Core IMS

12) The Core IMS forwards the ACK to the MF

13) The SCF sends an ACK with an SDP answer to the UE through the Core IMS

14) The Core IMS commits the resource reservation

15) The Core IMS forward the ACK to the UE

After receiving the ACK the UE can use one of two methods to start receiving the media stream. These are the same for UE-initiated CoD session initiation and SCF-initiated CoD session initiation, and the figure above refers to these steps described in A.3.1.

Koninklijke KPN NV - Exhibit 2010
Samsung Electronics America, Inc. et al. v. Koninklijke KPN NV PTAB-IPR2025-00502
Page 138 of 237

A.3.2 Session termination

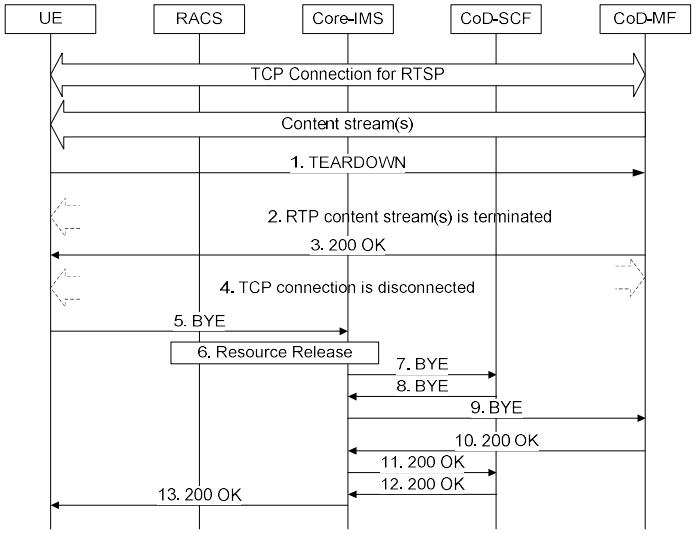

NOTE: The procedure and flow between the CoD-MCF and CoD-MDF is out of scope of the current release.

Figure A.6

1) TEARDOWN request is sent to CoD-MF.

2) CoD-MF stops sending RTP content streams.

3) The CoD-MF responds with RTSP 200 OK response.

4) The UE disconnects the TCP connection of RTSP.

5) The UE sends the BYE request towards Core-IMS.

6) Core-IMS requires for RACS to release resources.

7) to 9) BYE is sent to CoD-MF.

10) to 13) SIP 200 OK is sent back to the UE.

Koninklijke KPN NV - Exhibit 2010
Samsung Electronics America, Inc. et al. v. Koninklijke KPN NV PTAB-IPR2025-00502
Page 139 of 237

A.3.3 Session modification

A.3.3.1 Session modification initiated by MF

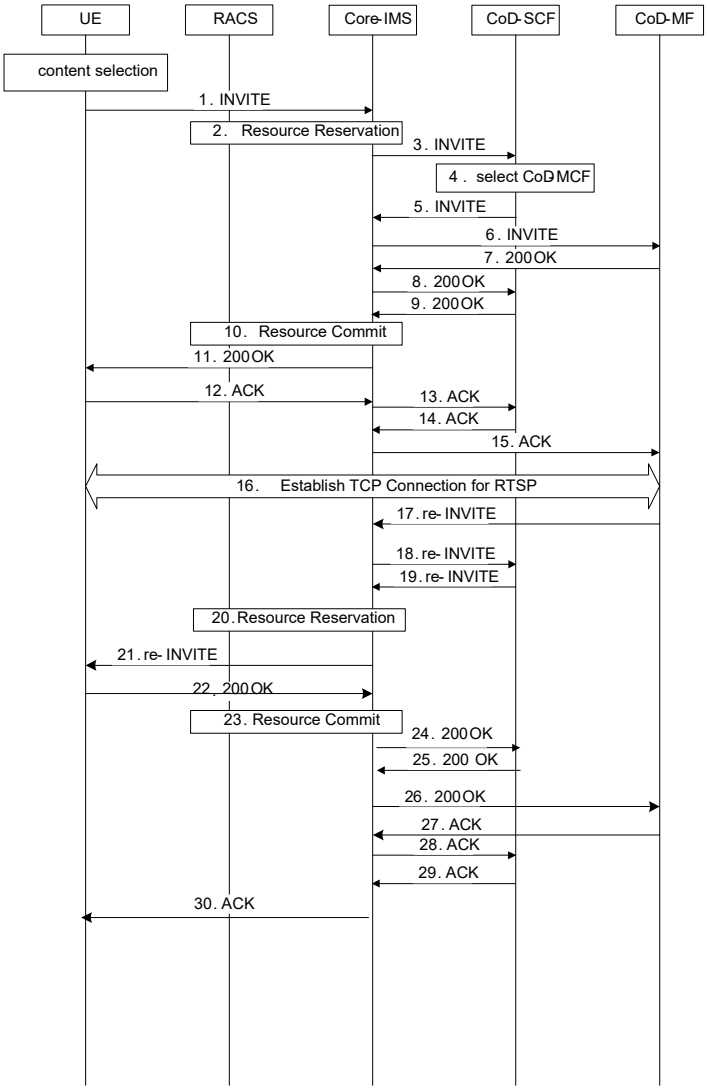

NOTE: The procedure and flow between the CoD-MCF and CoD-MDF is out of scope of the current release.

Figure A.7

1) Initial INVITE request to Core-IMS. The INVITE offers a SDP of a media description for RTSP connection.

2) Core-IMS requires for RACS to reserve resources of RTSP connection according to the Initial INVITE.

3) Core-IMS forwards the Initial INVITE to the CoD-SCF.

Koninklijke KPN NV - Exhibit 2010
Samsung Electronics America, Inc. et al. v. Koninklijke KPN NV PTAB-IPR2025-00502
Page 140 of 237

4) When the CoD-SCF receives the Initial INVITE request from the UE, the CoD-SCF may perform service authorization. The CoD-SCF selects a CoD-MF.

5) to 6) The initial INVITE request is sent to the CoD-MF selected by the CoD-SCF.

7) to 9) SIP 200 OK for Initial INVITE is sent from CoD-MF to the Core-IMS.

10) Core-IMS requires for RACS to commit the reservation.

11) SIP 200 OK response is sent back to the UE.

12) to 15) The UE sends ACK to CoD-MF.

16) A TCP connection for RTSP is established.

17) The CoD-MF sends a re-INVITE request to Core-IMS to establish the content delivery channel.

18) to 19) The re-INVITE request is routed back to Core-IMS via the CoD-SCF.

20) Core-IMS requires for RACS to reserve additional resources of RTP streams according to the re-INVITE.

21) re-INVITE is sent to the UE.

22) The UE sends SIP 200 OK with SDP. The SDP contains the media descriptions of RTP stream to be used.

23) Core-IMS requires for RACS to commit the reservation.

24) to 26) SIP 200 OK is sent to the CoD-MF.

27) to 30) The CoD-MF returns ACK to the UE.

A.4 Example signalling flows of BC operation

A.4.1 UE-initiated session initiation

This clause describes an example of signalling flow of session initiation when the UE retrieves network parameters from the SSF.

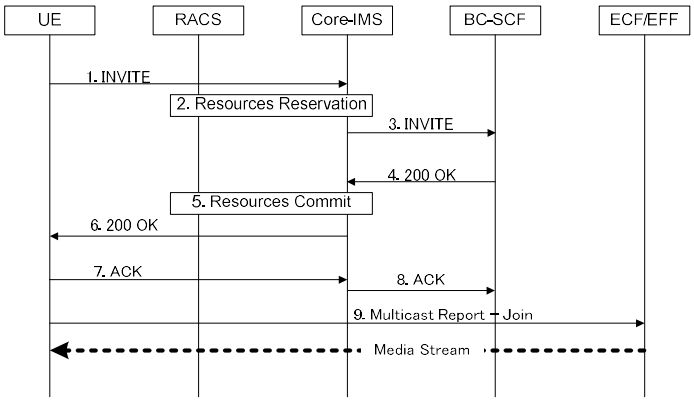

Figure A.8: Session initiation of BC operation

Koninklijke KPN NV - Exhibit 2010
Samsung Electronics America, Inc. et al. v. Koninklijke KPN NV PTAB-IPR2025-00502
Page 141 of 237

1) The UE initiates BC Service. The SIP INVITE message contains BW requirements for this session and a list of Service packages and multicast addresses to be authorized during the session.

2) Core IMS identifies this is as a BC service session initiation and reserves the resources with RACS.

3) The INVITE message is forwarded to the SCF. The SCF validates the list of requested service packages against the subscriber profile associated with the UE. The SCF may remove some service packages or replace one with a list of multicast addresses.

4) The IPTV application sends the positive result to the IMS core.

5) Core IMS modifies the reservation and aligns it with any modification the SCF made, as described in step 2. Core IMS commits the reservation with RACS.

6) Core IMS forwards the result to the UE.

7) UE sends ACK towards SCF.

8) Core-IMS routes the ACK message to SCF.

9) The UE joins the multicast address indicated in the response.

10) Content is delivered.

NOTE: After successful authorization of the service initiation request, the derivation and delivery of further necessary keying material to the UE may be initiated to enable decryption of BC streams in real time (in accordance to the media content protection model for IPTV as described in TS 187 003 [10]). This can be done statically prior to the content delivery or dynamically during the content delivery.

A.4.1A SCF-initiated session initiation

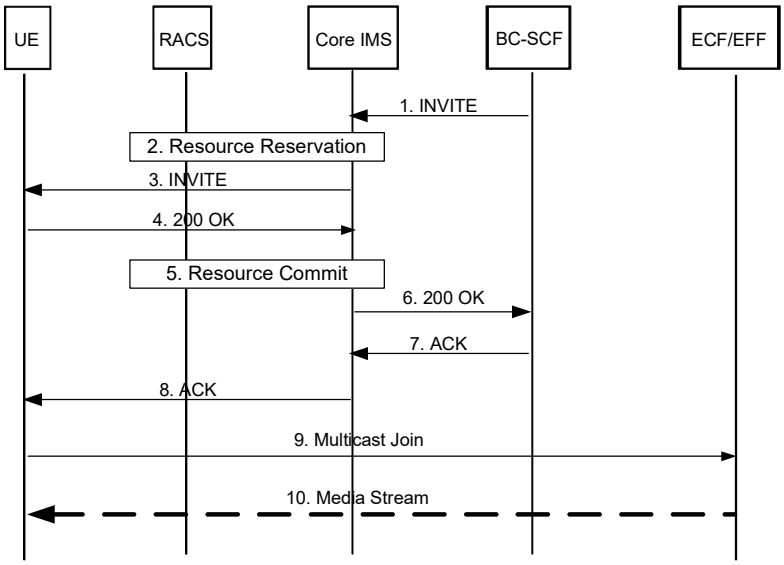

Figure A.8A: SCF-initiated BC session

1) The SCF sends an initial INVITE to the Core IMS. For example when a user has preselected content.

2) The Core IMS reserves resources based on the SDP offer from the SCF

3) The INVITE is forwarded to the UE

Koninklijke KPN NV - Exhibit 2010
Samsung Electronics America, Inc. et al. v. Koninklijke KPN NV PTAB-IPR2025-00502
Page 142 of 237

4) The UE accepts the INVITE and send an 200 OK to the Core IMS

5) The Core IMS commits the resource reservation

6) The Core IMS forwards the SIP 200 OK to the SCF

6) The SCF sends an ACK the the UE

8) The Core IMS forwards the ACK to the UE

9) The UE joins the multicast address

10) Content is delivered

A.4.2 Session termination

This clause describes an example of signalling flow of session termination.

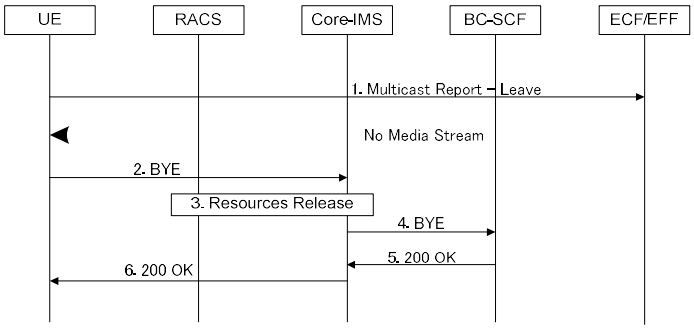

Figure A.9: Session termination of BC operation

1) The UE sends a multicast Leave request (Membership Report Message (IGMP) or Multicast Listener Report Message (MLD)) to stop receiving multicast media stream. The UE populates the message as follows:

- Multicast Address field is set to the multicast address to be left.
- If the protocol is IGMPv3 or MLDv2:
  - If source addresses have been set in the Join message, the same source address list is excluded from the listening interface; the Record Type is set to "BLOCK_OLD_SOURCES" and Source list is set to the source address.
  - If no source address has been set in the Join message, Filter Change record is set to INCLUDE with an empty source list.

2) The UE sends a BYE request to Core-IMS.

3) Core-IMS requires for RACS to release resources.

4) Core-IMS forwards a BYE to the BC-SCF.

5) to 6) The BC-SCF responds with SIP 200 OK response and the SIP session is terminated.

A.4.3 Channel switching

This clause describes two examples of signalling flow of channel switching.

Koninklijke KPN NV - Exhibit 2010
Samsung Electronics America, Inc. et al. v. Koninklijke KPN NV PTAB-IPR2025-00502
Page 143 of 237

A.4.3.1 Join after leave

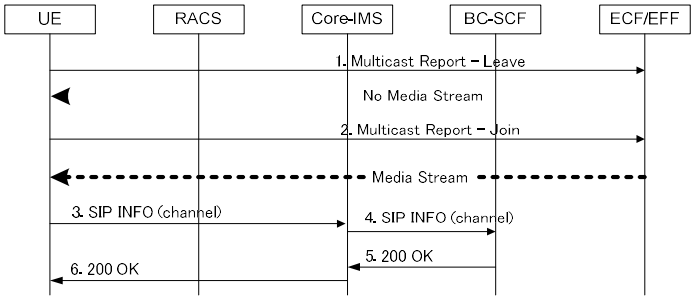

Figure A.10: Changing multicast channels of BC operation (2 messages)

1) The UE sends a multicast Leave request (Membership Report Message (IGMP) or Multicast Listener Report Message (MLD)) to stop receiving the multicast media stream of the old channel.

2) The UE sends a multicast Join request (Membership Report Message (IGMP) or Multicast Listener Report Message (MLD)) to start receiving the multicast media stream of the new channel.

3) to 4) If the UE remains on the selected channel for a period of time greater than a preconfigured value (example 10 seconds), the UE may inform the SCF of selected channel.

5) to 6) The SCF replies with a SIP 200 OK.

A.4.3.2 Leave and Join at the same time

If the Transport Function is using IGMPv3 or MLDv2, the UE may choose to send a single IGMP message containing the Leave request and the Join request, for leaving the old channel and joining the new channel. This is depicted in figure A.11.

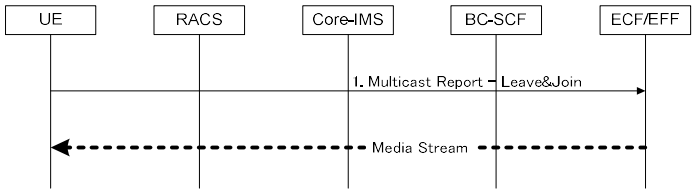

Figure A.11: Changing multicast channels of BC operation (single message)

1) The UE sends a combined multicast Leave/Join request (Membership Report Message (IGMP) or Multicast Listener Report Message (MLD)) to stop receiving the multicast media stream of the old channel and start receiving the multicast media stream of the new channel.

Koninklijke KPN NV - Exhibit 2010
Samsung Electronics America, Inc. et al. v. Koninklijke KPN NV PTAB-IPR2025-00502
Page 144 of 237

A.5 Example signalling flows for inter-destination media synchronization

A.5.1 Inter-destination media synchronization flows for SIP signalling

A.5.1.0 General

The functional entity "MSAS" in this clause refers to the session-level MSAS, see also clause 4.2.8

A.5.1.1 Inter-destination media synchronization of a BC service

This clause describes an example SIP signalling flow to initiate up a using synchronization session initiation from clause 5.7.1.1

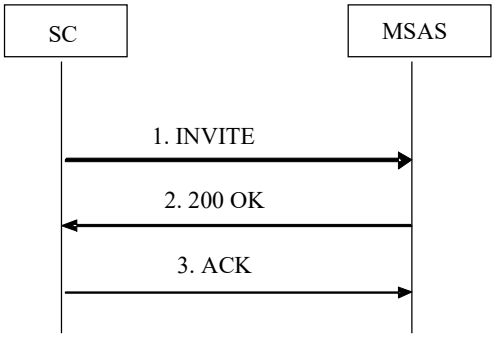

Figure 12: SIP signalling for the session set-up of inter-destination media synchronization of a BC service

NOTE: To simplify signalling flows, details on the inclusion of the IMS Core, resource reservations, on specific content control and delivery flows, etc. have been omitted. Only those parts of the SIP signalling flow are shown that are relevant for inter-destination media synchronization. See clauses 5.1.3. and 5.3.1. for further details on BC operation.

(1) The SC sends the initial SIP INVITE request to the MSAS. This SIP INVITE requests contains the synchronization group identifier (SyncGroupId). See clause 5.7.1.1 for details on the use of SyncGroupId.

(2) The MSAS responds with a SIP 200 OK, which contains the SyncGroupId and adds the MSAS parameters (SSRC-ID, address and port number and RTCP SyncGroupID) in the SDP description. Since the MSAS modifies the SC offer, it acts as a B2BUA.

(3) SIP ACK is sent back to the MSAS.

A.5.1.2 Inter-destination media synchronization of a CoD service using RTSP method 1

This clause describes an example SIP signalling flow to initiate a synchronization session from clauses 5.4.10.1, 5.7.1.1 and 5.8.1.1 using RTSP method 1.

Koninklijke KPN NV - Exhibit 2010
Samsung Electronics America, Inc. et al. v. Koninklijke KPN NV PTAB-IPR2025-00502
Page 145 of 237

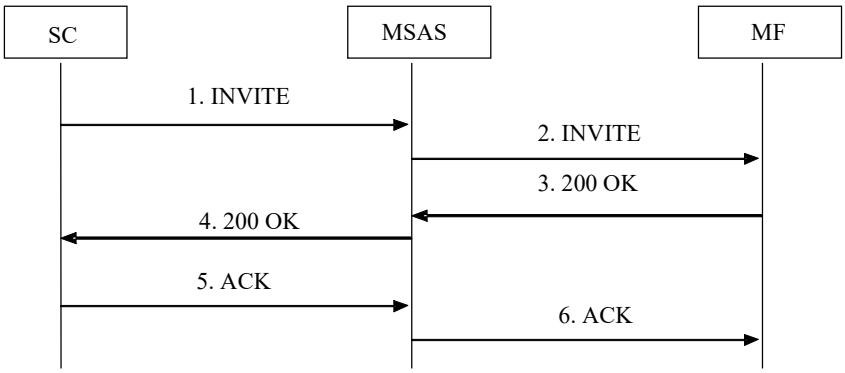

Figure A.13: SIP signalling for the session set-up of inter-destination media synchronization of a COD service using RTSP method 1

NOTE: To simplify signalling flows, details on the inclusion of the IMS Core, resource reservations, on specific content control and delivery flows, etc. have been omitted. Only those parts of the SIP signalling flow are shown that are relevant for inter-destination media synchronization. See clauses 5.1.4., 5.3.2. and 5.4.1. for further details on CoD RTSP method 1 operation.

(1) The SC sends the initial SIP INVITE request to the MSAS. This SIP INVITE requests contains the synchronization group identifier (SyncGroupId). See clause 5.7.1.1. for details on the use of SyncGroupId.

(2) The MSAS forwards the SIP INVITE to the MF, adding the MSAS parameters details (address and port number and RTCP SynGroupID) in the SDP description. Since the MSAS modifies the SC offer, it acts as a B2BUA.

(3) The MF assigns SSRC to the media RTP stream and sends a SIP 200 OK to the MSAS, adding the SSRC to the SDP description of the media.

(4) The MSAS forwards the SIP 200 OK to the SC, containing the SyncGroupId, the MSAS address and the SSRC.

(5)&(6) SIP ACKs are sent.

A.5.1.3 Inter-destination media synchronization of a CoD service using RTSP method 2

This clause describes an example combined SIP and RTSP signalling flow to initiate a using synchronization session initiation from clauses 5.4.10.1, 5.7.1.1 and 5.8.1.1, 7.2.4. and 7.3.1, using RTSP method 2.

Koninklijke KPN NV - Exhibit 2010
Samsung Electronics America, Inc. et al. v. Koninklijke KPN NV PTAB-IPR2025-00502
Page 146 of 237

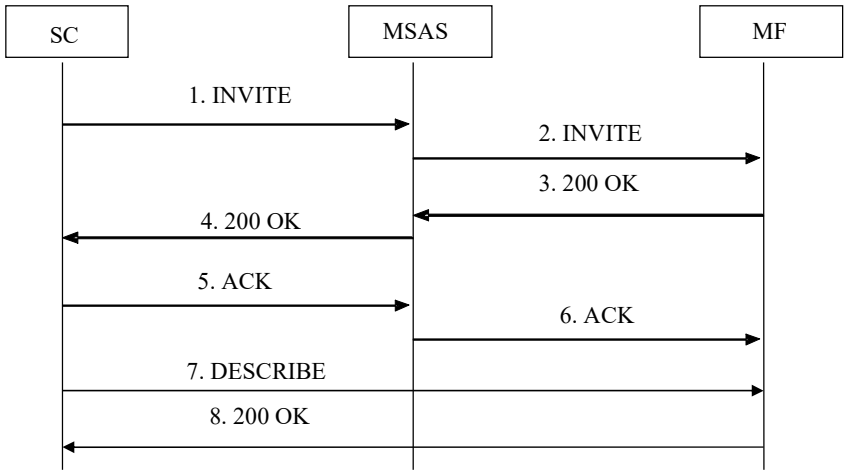

Figure A.14: Combined SIP and RTSP signalling for the session set-up of inter-destination media synchronization of a COD service using RTSP method 2

NOTE: To simplify signalling flows, details on the inclusion of the IMS Core, resource reservations, on specific content control and delivery flows, etc. have been omitted. Only those parts of the combined SIP and RTSP flow are shown that are relevant for inter-destination media synchronization. See clauses 5.1.4., 5.3.2., 5.4.1., 7.1.2. and 7.2.2. for further details on CoD RTSP method 2 operation.

(1) The SC sends the initial SIP INVITE request to the MSAS. This SIP INVITE requests contains the synchronization group identifier (SyncGroupId). see clause 5.7.1.1. for details on the use of SyncGroupId.

(2) The MSAS forwards the SIP INVITE to the MF, adding the MSAS parameters details (address and port number and RTCP SynGroupID) in the SDP description. Since the MSAS modifies the SC offer, it acts as a B2BUA.

(3) This step flows step 3 of clause A.5.1.2.

NOTE: The MF is allowed to wait assigning an SSRC and to send a SIP 200 OK to the MSAS without adding the SSRC to the SDP description of the media.

(4) This step flows step 4 of clause A.5.1.2.

NOTE: It is allowed that the MSAS forwards the SIP 200 OK to the SC, containing only the SyncGroupId and the MSAS address.

(5)&(6) SIP ACKs are sent.

(7) The SC invokes RTSP DESCRIBE request to the MF.s

(8) If the MF has not conveyed the SSRC towards the MSAS in step 3, the MF assigns an SSRC and sends 200 OK with SDP. The SDP contains the SSRC as an attribute in the SDP description.

A.5.2 Inter-destination media synchronization flows for RTCP signalling

A.5.2.0 General

The functional entity "MSAS" in this clause refers to the media-level MSAS, see also clause 4.2.8

Koninklijke KPN NV - Exhibit 2010
Samsung Electronics America, Inc. et al. v. Koninklijke KPN NV PTAB-IPR2025-00502
Page 147 of 237

A.5.2.1 Inter-destination media synchronization of BC service

This clause describes an example RTCP signalling flow for the exchange of using synchronization status and settings instructions exchange from clause 11.3 and 11.4

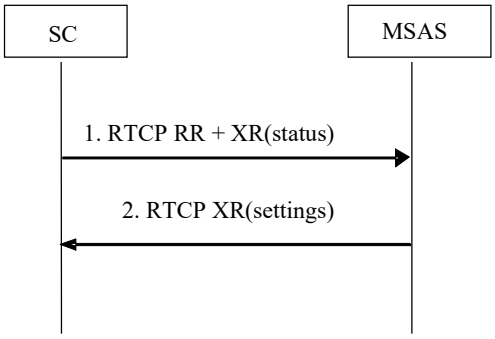

Figure A.15: RTCP signalling for the exchange of synchronization status and settings instructions for a BC service

NOTE: To simplify signalling flows, details on the inclusion of the IMS Core, resource reservations, on specific content control and delivery flows, etc. have been omitted. Only those parts of the flow are shown that are relevant for inter-destination media synchronization.

(1) The SC sends RTCP Receiver Report (RR) to the MSAS. This report includes t includes an eXtended Report (XR) containing the synchronization status information according to Annex W.

(2) The MSAS sends an RTCP XR containing synchronization settings instructions directly to the SC, according to Annex W.

NOTE: The MSAS may forward RTCP RR to the source of the media, see also clause 11 on the use of RTCP. RTCP SR are sent directly from media source to SC.

A.5.2.2 Inter-destination media synchronization of CoD service

This clause describes an example RTCP signalling flow for the exchange of using synchronization status and settings exchange from clause 11.3 and 11.4.

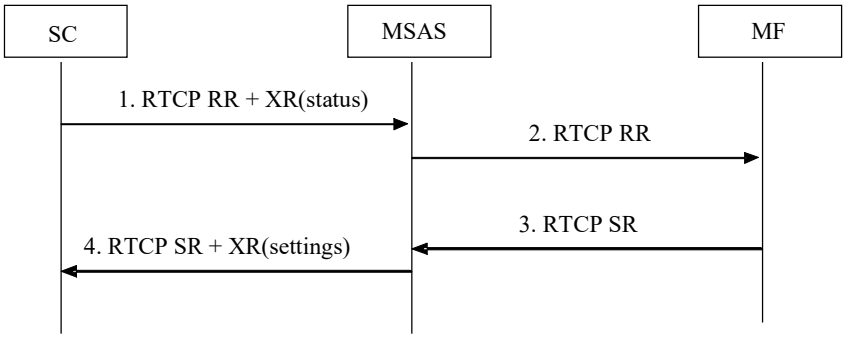

Koninklijke KPN NV - Exhibit 2010
Samsung Electronics America, Inc. et al. v. Koninklijke KPN NV PTAB-IPR2025-00502
Page 148 of 237

Figure A.16: RTCP signalling for the exchange of synchronization status and settings instructions for a CoD service

NOTE: To simplify signalling flows, details on the inclusion of the IMS Core, resource reservations, on specific content control and delivery flows, etc. have been omitted. Only those parts of the flow are shown that are relevant for inter-destination media synchronization.

(1) The SC sends RTCP Receiver Report (RR) to the MSAS. This report includes includes an eXtended Report (XR) containing the synchronization status information, according to annex W.

(2) The MSAS removes the XR from the RR and forwards the RR to the source of the media.

(3) The MF sends its RTCP Sender Reports (SR) to the MSAS.

(4) The MSAS adds the XR containing the settings instructions to the SR according to Annex W, and forwards this to the SC.

A.5.2.3 RTCP exchange between UEs directly

This clause describes an example RTCP flow for inter-destination media synchronization between two UEs directly. Both UE1 and UE2 have SC functionality. UE1 acts also as MSAS, see Figure A.17. If the RTP/RTCP flows are handled by a server (e.g. a conference bridge), then the MSAS functionality may also be located there.

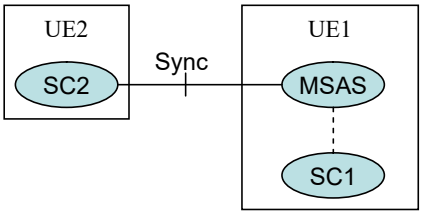

Figure A.17: UE acting as MSAS for inter-destination media synchronization between UEs.

Figure A.18 shows an example RTCP flow for inter-destination media synchronization between two UEs directly.

Koninklijke KPN NV - Exhibit 2010
Samsung Electronics America, Inc. et al. v. Koninklijke KPN NV PTAB-IPR2025-00502
Page 149 of 237

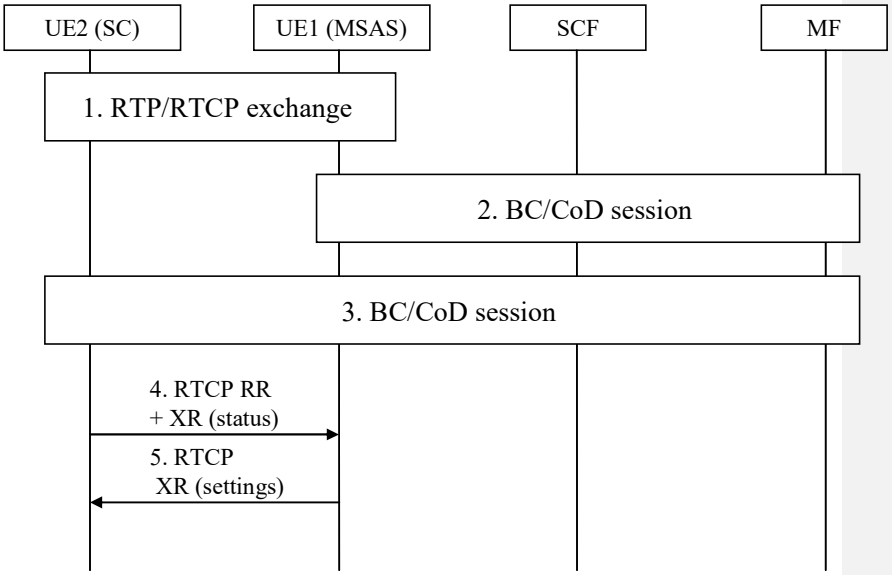

Figure A.18: RTCP signalling for the exchange of synchronization status and settings instructions between UEs directly.

1. UE1 and UE2 have a media session, which includes regular RTP/RTCP exchange for the media transport and transport control.

2-3. UE1 and UE2 each have a BC or CoD session for the same service and content.

4-5. UE1 and UE2 reuse their regular RTCP SRs and RRs to append RTCP Extended Reports (XR) [45] for the exchange of synchronization information. See also clauses 11.3 and 11.4.

UE1 and UE2 have to obtain the SyncGroupID, the SSRC value and the MSAS address (=UE1 address) before step 4. These may be obtained using the procedures as described in clauses 5.4.10, 5.7.1.1, 5.8.1.1 and 7.3.

A.5.2.4 RTCP exchange for sync'

This clause describes an example RTCP flow for sync', see Figure A.16.

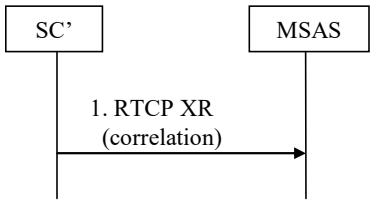

Figure A.16: RTCP flow for sync'.

1. SC' sends MSAS synchronization correlation information: RTCP eXtended Reports (XR) related to the incoming media stream and RTCP eXtended Reports (XR) (Annex W) related to the outgoing media stream, see Annex W.

Synchronization correlation information may be sent from SC' to MSAS at regular pre-configured time intervals.

Koninklijke KPN NV - Exhibit 2010
Samsung Electronics America, Inc. et al. v. Koninklijke KPN NV PTAB-IPR2025-00502
Page 150 of 237

Figure A.17 are example RTCP XR messages for sync', see also Annex W.

```
 0                   1                   2                   3
 0 1 2 3 4 5 6 7 8 9 0 1 2 3 4 5 6 7 8 9 0 1 2 3 4 5 6 7 8 9 0 1
+-+-+-+-+-+-+-+-+-+-+-+-+-+-+-+-+-+-+-+-+-+-+-+-+-+-+-+-+-+-+-+-+
|V=2|P|reserved |   PT=XR=207   |             length=9          |
+-+-+-+-+-+-+-+-+-+-+-+-+-+-+-+-+-+-+-+-+-+-+-+-+-+-+-+-+-+-+-+-+
|                     SSRC of packet sender SC'                 |
+=+=+=+=+=+=+=+=+=+=+=+=+=+=+=+=+=+=+=+=+=+=+=+=+=+=+=+=+=+=+=+=+
|     BT=9      |SPST=3 |0|        block length=7                |
+-+-+-+-+-+-+-+-+-+-+-+-+-+-+-+-+-+-+-+-+-+-+-+-+-+-+-+-+-+-+-+-+
|     PT      |                   Reserved                      |
+-+-+-+-+-+-+-+-+-+-+-+-+-+-+-+-+-+-+-+-+-+-+-+-+-+-+-+-+-+-+-+-+
|  Media Stream Correlation Identifier, same for in and out     |
+-+-+-+-+-+-+-+-+-+-+-+-+-+-+-+-+-+-+-+-+-+-+-+-+-+-+-+-+-+-+-+-+
|          SSRC of incoming media stream                        |
+-+-+-+-+-+-+-+-+-+-+-+-+-+-+-+-+-+-+-+-+-+-+-+-+-+-+-+-+-+-+-+-+
|      Packet Received NTP timestamp, most significant word     |
+-+-+-+-+-+-+-+-+-+-+-+-+-+-+-+-+-+-+-+-+-+-+-+-+-+-+-+-+-+-+-+-+
|      Packet Received NTP timestamp, least significant word    |
+-+-+-+-+-+-+-+-+-+-+-+-+-+-+-+-+-+-+-+-+-+-+-+-+-+-+-+-+-+-+-+-+
|              Packet Received RTP timestamp                    |
+-+-+-+-+-+-+-+-+-+-+-+-+-+-+-+-+-+-+-+-+-+-+-+-+-+-+-+-+-+-+-+-+
|              Packet Presented NTP timestamp = empty           |
+-+-+-+-+-+-+-+-+-+-+-+-+-+-+-+-+-+-+-+-+-+-+-+-+-+-+-+-+-+-+-+-+


 0                   1                   2                   3
 0 1 2 3 4 5 6 7 8 9 0 1 2 3 4 5 6 7 8 9 0 1 2 3 4 5 6 7 8 9 0 1
+-+-+-+-+-+-+-+-+-+-+-+-+-+-+-+-+-+-+-+-+-+-+-+-+-+-+-+-+-+-+-+-+
+=+=+=+=+=+=+=+=+=+=+=+=+=+=+=+=+=+=+=+=+=+=+=+=+=+=+=+=+=+=+=+=+
|V=2|P|reserved |   PT=XR=207   |             length=9          |
+-+-+-+-+-+-+-+-+-+-+-+-+-+-+-+-+-+-+-+-+-+-+-+-+-+-+-+-+-+-+-+-+
|                     SSRC of packet sender SC'                 |
+=+=+=+=+=+=+=+=+=+=+=+=+=+=+=+=+=+=+=+=+=+=+=+=+=+=+=+=+=+=+=+=+
|     BT=9      |SPST=4 |0|        block length=7                |
+-+-+-+-+-+-+-+-+-+-+-+-+-+-+-+-+-+-+-+-+-+-+-+-+-+-+-+-+-+-+-+-+
|     PT      |                   Reserved                      |
+-+-+-+-+-+-+-+-+-+-+-+-+-+-+-+-+-+-+-+-+-+-+-+-+-+-+-+-+-+-+-+-+
|  Media Stream Correlation Identifier, same for in and out     |
+-+-+-+-+-+-+-+-+-+-+-+-+-+-+-+-+-+-+-+-+-+-+-+-+-+-+-+-+-+-+-+-+
|          SSRC of outgoing media stream                        |
+-+-+-+-+-+-+-+-+-+-+-+-+-+-+-+-+-+-+-+-+-+-+-+-+-+-+-+-+-+-+-+-+
|      Packet Received NTP timestamp, most significant word     |
+-+-+-+-+-+-+-+-+-+-+-+-+-+-+-+-+-+-+-+-+-+-+-+-+-+-+-+-+-+-+-+-+
|      Packet Received NTP timestamp, least significant word    |
+-+-+-+-+-+-+-+-+-+-+-+-+-+-+-+-+-+-+-+-+-+-+-+-+-+-+-+-+-+-+-+-+
|              Packet Received RTP timestamp                    |
+-+-+-+-+-+-+-+-+-+-+-+-+-+-+-+-+-+-+-+-+-+-+-+-+-+-+-+-+-+-+-+-+
|              Packet Presented NTP timestamp = empty           |
+=+=+=+=+=+=+=+=+=+=+=+=+=+=+=+=+=+=+=+=+=+=+=+=+=+=+=+=+=+=+=+=+
```

Figure A.17: Example RTCP messages for sync'.

Koninklijke KPN NV - Exhibit 2010
Samsung Electronics America, Inc. et al. v. Koninklijke KPN NV PTAB-IPR2025-00502
Page 151 of 237

A.6 Example signalling flows of content insertion

A.6.1 Content insertion at the UE

This flow shows an example of content insertion that is triggered by an event detected at the SCF, e.g. for targeted ad insertion.

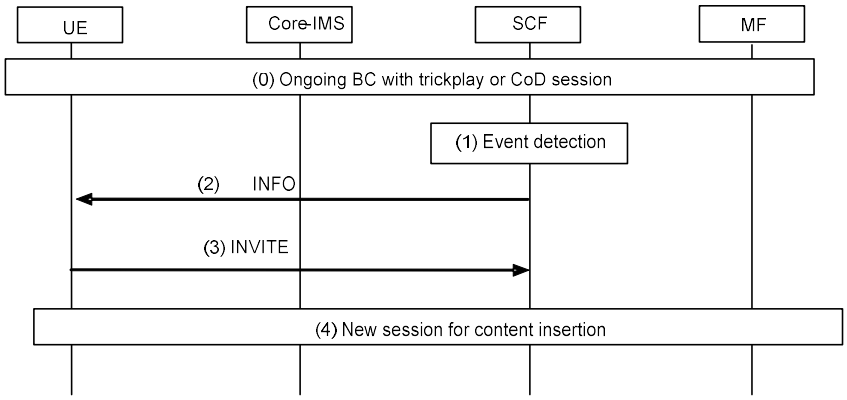

Figure A.6.1

0) An ongoing session exists between UE and MF for BC with trick play or CoD.

1) The SCF detects an event that triggers the content insertion and selects the appropriate content to be inserted. The SCF can determine the duration of the content insertion depending on e.g. the (expected) length of the time interval that is available for content insertion, the user identity, the semantic context of the content in the ongoing session, the geographic location of the UE and its local time.

2) The SCF sends a notification to the UE concerning content insertion with SIP INFO, according to clause 5.3.12.1.

3) The UE sends initiates a new session for the inserted content with SIP INVITE. The INVITE contains Service Action Data, according to clause 5.1.13.

4) A new session starts for content insertion.

A.6.2 Content insertion at the UE during pause

This flow shows an example of content insertion that is triggered at a user request, when a user pauses CoD content.

Koninklijke KPN NV - Exhibit 2010
Samsung Electronics America, Inc. et al. v. Koninklijke KPN NV PTAB-IPR2025-00502
Page 152 of 237

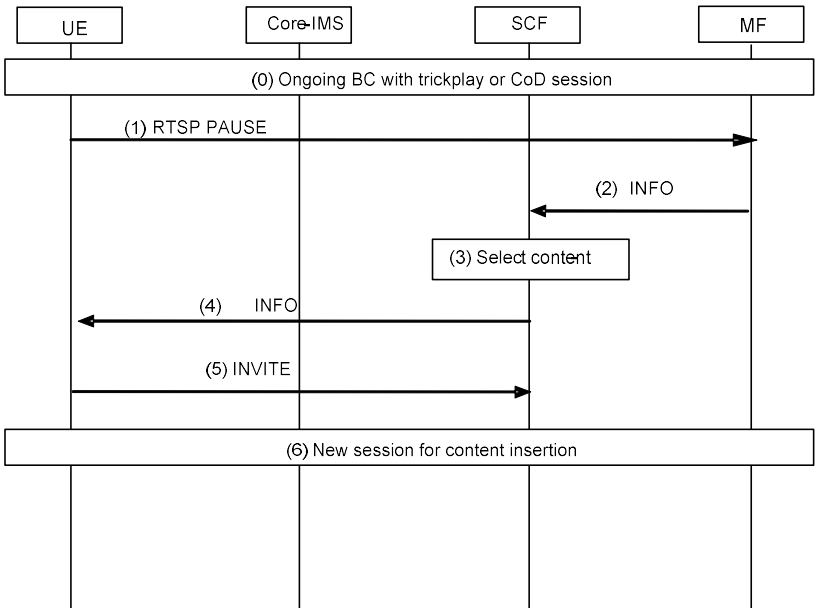

Figure A.6.2

0) An ongoing session exists between UE and MF for BC with trick play or CoD.

1) The UE sends an RTSP PAUSE to the MF.

2) The UE informs the SCF of the paused content with SIP INFO.

3) The SCF selects the appropriate content to be inserted. The SCF can determine the duration of the content insertion depending on e.g. the (expected) length of the time interval that is available for content insertion, the user identity, the semantic context of the content in the ongoing session, the geographic location of the UE and its local time. In the case of content insertion during a pause, The (expected) length of the time interval is indicated by the UE in the INFO message.

4) The SCF sends a notification to the UE concerning content insertion with SIP INFO, according to clause 5.3.12.1.

5) The UE sends initiates a new session for the inserted content with SIP INVITE. The INVITE contains Service Action Data, according to clause 5.1.13.

6) A new session starts for content insertion.

A.7 Example signalling flows for session transfer

The call flow shows an example of session transfer push mode where the session is pushed from the transferor to the transferee. Note that in the call flow it is assumed that the SCC application server is embedded in the SCF. This is for convenience and can indeed be a stand alone accplication server with no change to the general procedure.

Commented [zhouzp2]: George should create a figure for this part.

The following is a brief description of the steps in the call flow:

a. Initially the transferor has established a CoD session as per section 5.4.1
b. To select the device to which the transferor can push the session, the transferor subscribes to the registration event package to receive a list of registered devices. This is accomplished in steps 1 and 2 in the call flow.

Koninklijke KPN NV - Exhibit 2010
Samsung Electronics America, Inc. et al. v. Koninklijke KPN NV PTAB-IPR2025-00502
Page 153 of 237

c. The UE receives the list of registered in devices in the SIP NOTIFY in step 3, and responds to it in step 4 with a SIP 200 OK
d. The transferor selects the device, and then sends a SIP REFER targeted to that device. This is accomplished in steps 5 and 6.
e. The transferee receives the SIP REFER, extracts the pertinent information and responds with a SIP 200 OK Accepted to the transferee in steps 7 and 8.
f. The transferor now attempts to establish the new CoD session as per the procedure defined in 5.4.1.
g. Following the successful establishment of the session, the SCC AS clears the old session; This is accomplished through steps 10 and 11.
h. The transferee than notifies the transferor of the successful transfer of the session through steps 12 to 15.
i. The transferee then starts playing the content from the received bookmark and the transfer procedure has now been successfully completed

Annex B (normative): IPTV services XCAP application usage

B.1 General

For the purpose of manipulating data stored in an application server the XML Configuration Access Protocol (XCAP) defined in RFC 4825 [9] is used. XCAP allows a client to read, write and modify application configuration data, stored in XML format on a server. XCAP maps XML document sub-trees and element attributes to HTTP URIs, so that these components can be directly accessed by HTTP. XCAP uses the HTTP methods PUT, GET and DELETE to operating on XML documents stored in the server.

In the case of IPTV services, the data stored in a server is related to the execution of that given service. The present document defines a new XCAP Application Usage for the purpose of allowing a client to manipulate data related to IPTV services. This application usage defines the XML schema for the data used by the application, along with other key pieces of information.

XCAP defines two logical roles: XCAP client and XCAP servers. An XCAP client is an HTTP/1.1 compliant client. Similarly an XCAP server is an HTTP/1.1 compliant server. The XCAP server acts as a repository of XML documents that customize and modify the execution of IPTV services.

XCAP focuses on the definition of XML documents that are compliant with the XML schema and constrains defined for a particular XCAP application usage. XCAP allows application to provide XML documents that are common for all users or XML documents that affect the service of a given user.

Central to XCAP is the construction of the HTTP URI that points to particular XML document or certain components of it. A component in an XML document can be an XML element, attribute, or the value of it.

B.2 XCAP application usage

XCAP requires application usages to fulfil a number of steps in the definition of such application usage. The reminder of this clause specifies the required definitions of the IPTV services XCAP Application Usage.

Application Unique ID (AUID): Each XCAP application usage is associated with a unique name called the Application Unique ID (AUID). The AUID defined by this application usage falls into the vendor-proprietary namespace of XCAP AUID, where ETSI is considered a vendor.

The AUID allocated to the NGN IPTV services XCAP application usage is:

```
org.etsi.ngn.iptv
```

XML schema: Implementations in compliance with the present document shall implement the XML schema defined in **annex C**

default namespace: XCAP requires application usages to declare the default namespace. The default namespace of the IPTV services XCAP application usage is:

Koninklijke KPN NV - Exhibit 2010
Samsung Electronics America, Inc. et al. v. Koninklijke KPN NV PTAB-IPR2025-00502
Page 154 of 237

`urn:org:etsi:ngn:params:xml:ns:iptv`

MIME type: The MIME type of IPTV services XML documents is:

`application/vnd.etsi.iptvprofile+xml`

validation constraints: The present document does not specify any additional constraint beyond those defined by XCAP.

data semantics: The XML schema does not accept URIs that could be expressed as a relative URI reference causing a resolution problem. However, each of the supplementary services should consider if relative URIs are allowed in the subdocument tree, and in that case, they should indicate how to resolve relative URI references. In the absence of further indications, relative URI references should be resolved using the document URI as the base of the relative URI reference.

naming conventions: By default, NGN IPTV services XML documents are stored under the user's Home Directory (which is located under the "users" sub-tree). In order to facilitate the manipulation of an NGN IPTV services XML document, we define a default XML file name:

`iptvprofile.xml`

resource interdependencies: The present document does not specify additional resource interdependency beyond those specified in the XML schema.

authorization policies: The default XCAP authorization policy is used in the application usage defined by the present document.

NOTE: The default policy indicates that the creator of the XML document is the one that is authorized to manipulate it.

Koninklijke KPN NV - Exhibit 2010
Samsung Electronics America, Inc. et al. v. Koninklijke KPN NV PTAB-IPR2025-00502
Page 155 of 237

Annex C (normative): XML Schema for the IPTV profile

This annex specifies an XML schema for creating documents representing instances of the IPTV profile described in TS 182 027 [2]. This XML schema is used when IPTV profile is manipulated with the XCAP procedure described in clauses 6.1.2.1, 6.2.1.2, and annex B.

```
<?xml version="1.0" encoding="UTF-8"?>
<xs:schema
xmlns:xs="http://www.w3.org/2001/XMLSchema"
xmlns:uep="urn:org:etsi:ngn:params:xml:ns:iptvueprofile"
elementFormDefault="qualified"
attributeFormDefault="unqualified">

<xs:import namespace="urn:org:etsi:ngn:params:xml:ns:iptvueprofile"
schemaLocation="Annex P_XML Schema for UE Profile.xsd"/>

    <xs:element name="IPTVProfile">
        <xs:annotation>
            <xs:documentation> XML Schema for representing the IPTV Profile object identified in TS
182 027 clause 7.3.1
            </xs:documentation>
        </xs:annotation>
        <xs:complexType>
            <xs:sequence>
                <xs:element name="UEProfile" type="uep:tUEProfile" minOccurs="0"/>
                <xs:element name="GlobalSettings" type="tGlobalSettings" minOccurs="1"/>
                <xs:element name="BCProfile" type="tBCProfile" minOccurs="0"/>
                <xs:element name="CoDProfile" type="tCoDProfile" minOccurs="0"/>
                <xs:element name="PVRProfile" type="tPVRProfile" minOccurs="0"/>
                <xs:element name="PChProfile" type="tPChProfile" minOccurs="0"/>
                <xs:element name="UGCProfile" type="tUGCProfile" minOccurs="0"/>
                <xs:element name="Extension" type="tExtension" minOccurs="0"/>
                <xs:any namespace="##other" processContents="lax" minOccurs="0"
maxOccurs="unbounded"/>
            </xs:sequence>
            <xs:attribute name="ProfileId" type="xs:ID" />
            <xs:anyAttribute/>
        </xs:complexType>
    </xs:element>


    <xs:complexType name="tBCProfile">
        <xs:sequence>
            <xs:element name="BCServicePackage" type="tBCServicePackage"
minOccurs="1" maxOccurs="unbounded"/>
            <xs:element name="IPTVContentMarkerAuthorizedViewUser" type="xs:string" minOccurs="0"
maxOccurs="unbounded" />
            <xs:element name="IPTVContentMarkerSourceUser" type="xs:string" minOccurs="0"
maxOccurs="unbounded"/>
            <xs:element name="Extension" type="tExtension" minOccurs="0"/>
            <xs:any namespace="##other" processContents="lax" minOccurs="0" maxOccurs="unbounded"/>
        </xs:sequence>
    </xs:complexType>

    <xs:complexType name="tBCServicePackage">
        <xs:sequence>
            <xs:element name="BCPackageId" type="tBCServicePackageID" minOccurs="1"/>
            <xs:element name="Description" type="tBCServicePackageDescription" minOccurs="0"/>
            <xs:element name="BCService" type="tBCService" minOccurs="0" maxOccurs="unbounded"/>
            <xs:element name="Extension" type="tExtension" minOccurs="0"/>
            <xs:any namespace="##other" processContents="lax" minOccurs="0" maxOccurs="unbounded"/>
        </xs:sequence>
    </xs:complexType>


    <xs:simpleType name="tBCServicePackageID" final="list restriction">
        <xs:restriction base="xs:string">
            <xs:minLength value="0"/>
            <xs:maxLength value="16"/>
        </xs:restriction>
    </xs:simpleType>
```


Koninklijke KPN NV - Exhibit 2010
Samsung Electronics America, Inc. et al. v. Koninklijke KPN NV PTAB-IPR2025-00502
Page 156 of 237

```
    <xs:simpleType name="tBCServicePackageDescription" final="list restriction">
        <xs:restriction base="xs:string">
            <xs:minLength value="0"/>
            <xs:maxLength value="64"/>
        </xs:restriction>
    </xs:simpleType>


    <xs:complexType name="tBCService">
        <xs:sequence>
            <xs:element name="BCServiceId" type="tBCServiceID" minOccurs="1"/>
            <xs:element name="QualityDefinition" type="tQualityDefinition" minOccurs="0"/>
            <xs:element name="Extension" type="tExtension" minOccurs="0"/>
            <xs:any namespace="##other" processContents="lax" minOccurs="0" maxOccurs="unbounded"/>
        </xs:sequence>
    </xs:complexType>


    <xs:simpleType name="tBCServiceID" final="list restriction">
        <xs:restriction base="xs:string">
            <xs:minLength value="0"/>
            <xs:maxLength value="16"/>
        </xs:restriction>
    </xs:simpleType>


    <xs:simpleType name="tQualityDefinition" final="list restriction">
        <xs:restriction base="xs:unsignedByte">
            <xs:minInclusive value="0"/>
            <xs:maxInclusive value="1"/>
            <xs:enumeration value="0">
                <xs:annotation>
                    <xs:documentation>
                        <label xml:lang="en">SD</label>
                        <definition xml:lang="en">Standard Definition</definition>
                    </xs:documentation>
                </xs:annotation>
            </xs:enumeration>
            <xs:enumeration value="1">
                <xs:annotation>
                    <xs:documentation>
                        <label xml:lang="en">HD</label>
                        <definition xml:lang="en">High Definition</definition>
                    </xs:documentation>
                </xs:annotation>
            </xs:enumeration>
        </xs:restriction>
    </xs:simpleType>


    <xs:complexType name="tCoDProfile">
        <xs:sequence>
            <xs:element name="ParentalControl" type="tParentalControlLevel" minOccurs="0"/>
            <xs:element name="IPTVContentMarkerAuthorizedViewUser" type="xs:string" minOccurs="0"
maxOccurs="unbounded" />
            <xs:element name="IPTVContentMarkerSourceUser" type="xs:string" minOccurs="0"
maxOccurs="unbounded"/>
            <xs:element name="Extension" type="tExtension" minOccurs="0"/>
            <xs:any namespace="##other" processContents="lax" minOccurs="0" maxOccurs="unbounded"/>
        </xs:sequence>
    </xs:complexType>


    <xs:simpleType name="tParentalControlLevel" final="list restriction">
        <xs:restriction base="xs:unsignedByte">
            <xs:minInclusive value="0"/>
            <xs:maxInclusive value="5"/>
            <xs:enumeration value="0">
                <xs:annotation>
                    <xs:documentation>
                        <label xml:lang="en">ALL</label>
                        <definition xml:lang="en">All contents</definition>
                    </xs:documentation>
                </xs:annotation>
            </xs:enumeration>
            <xs:enumeration value="1">
                <xs:annotation>
```


Koninklijke KPN NV - Exhibit 2010
Samsung Electronics America, Inc. et al. v. Koninklijke KPN NV PTAB-IPR2025-00502
Page 157 of 237

```
                    <xs:documentation>
                        <label xml:lang="en">Level 1</label>
                        <definition xml:lang="en">Level 1 contents</definition>
                    </xs:documentation>
                </xs:annotation>
            </xs:enumeration>
            <xs:enumeration value="2">
                <xs:annotation>
                    <xs:documentation>
                        <label xml:lang="en">Level 2</label>
                        <definition xml:lang="en">Up to level 2</definition>
                    </xs:documentation>
                </xs:annotation>
            </xs:enumeration>
            <xs:enumeration value="3">
                <xs:annotation>
                    <xs:documentation>
                        <label xml:lang="en">Level 3</label>
                        <definition xml:lang="en">Up to level 3</definition>
                    </xs:documentation>
                </xs:annotation>
            </xs:enumeration>
            <xs:enumeration value="4">
                <xs:annotation>
                    <xs:documentation>
                        <label xml:lang="en">Level 4</label>
                        <definition xml:lang="en">Up to level 4</definition>
                    </xs:documentation>
                </xs:annotation>
            </xs:enumeration>
            <xs:enumeration value="5">
                <xs:annotation>
                    <xs:documentation>
                        <label xml:lang="en">Level 5</label>
                        <definition xml:lang="en">Up to level 5</definition>
                    </xs:documentation>
                </xs:annotation>
            </xs:enumeration>
        </xs:restriction>
    </xs:simpleType>


    <xs:complexType name="tPVRProfile">
        <xs:sequence>
            <xs:annotation>
                <xs:documentation>
                    Unit of the StorageLimitInVolume element is the GigaOctet
                </xs:documentation>
            </xs:annotation>
            <xs:element name="PVRPreference" type="tPVRPreference"/>
            <xs:element name="StorageLimitInTime" type="tNPVRStorageLimitInTime" minOccurs="0"/>
            <xs:element name="StorageLimitInVolume" type="tNPVRStorageLimitInVolume" minOccurs="0"/>
            <xs:element name="AuthorizedControlUser" type="tAuthorizedControlUser" minOccurs="0"/>
            <xs:element name="IPTVContentMarkerAuthorizedViewUser" type="xs:string" minOccurs="0"
maxOccurs="unbounded" />
            <xs:element name="IPTVContentMarkerSourceUser" type="xs:string" minOccurs="0"
maxOccurs="unbounded"/>
<xs:element name="Extension" type="tExtension" minOccurs="0"/>
            <xs:any namespace="##other" processContents="lax" minOccurs="0" maxOccurs="unbounded"/>
        </xs:sequence>
    </xs:complexType>

    <xs:simpleType name="tPVRPreference" final="list restriction">
        <xs:restriction base="xs:unsignedByte">
            <xs:minInclusive value="0"/>
            <xs:maxInclusive value="1"/>
            <xs:enumeration value="0">
                <xs:annotation>
                    <xs:documentation>
                        <label xml:lang="en">Network</label>
                        <definition xml:lang="en">Recording is done in the network</definition>
                    </xs:documentation>
                </xs:annotation>
            </xs:enumeration>
            <xs:enumeration value="1">
                <xs:annotation>
                    <xs:documentation>
                        <label xml:lang="en">User_Equipment</label>
```


Koninklijke KPN NV - Exhibit 2010
Samsung Electronics America, Inc. et al. v. Koninklijke KPN NV PTAB-IPR2025-00502
Page 158 of 237

```
                        <definition xml:lang="en">Recording is done on the user
equipment</definition>
                    </xs:documentation>
                </xs:annotation>
            </xs:enumeration>
        </xs:restriction>
    </xs:simpleType>

    <xs:simpleType name="tNPVRStorageLimitInTime">
        <xs:restriction base="xs:duration">
            <xs:minInclusive value="PT0H"/>
            <xs:maxInclusive value="PT1000000000H"/>
        </xs:restriction>
    </xs:simpleType>

    <xs:simpleType name="tNPVRStorageLimitInVolume">
        <xs:restriction base="xs:nonNegativeInteger"/>
    </xs:simpleType>

    <xs:simpleType name="tAuthorizedControlUser" final="list restriction">
        <xs:restriction base="xs:string"/>
    </xs:simpleType>

    <xs:complexType name="tGlobalSettings">
        <xs:sequence>
            <xs:element name="LanguagePreference" type="tLanguage" minOccurs="0"/>
            <xs:element name="UsersActionRecordable" type="tUserActionRecordable"/>
            <xs:element name="Extension" type="tExtension" minOccurs="0"/>
            <xs:any namespace="##other" processContents="lax" minOccurs="0" maxOccurs="unbounded"/>
        </xs:sequence>
    </xs:complexType>


    <xs:simpleType name="tLanguage">
        <xs:restriction base="xs:string">
                <xs:annotation>
                    <xs:documentation>
                      <definition xml:lang="en">ISO 639-2 Language code</definition>
                    </xs:documentation>
                </xs:annotation>
            <xs:minLength value="3"/>
            <xs:maxLength value="3"/>
        </xs:restriction>
    </xs:simpleType>

    <xs:complexType name="tExtension">
        <xs:sequence>
            <xs:any processContents="lax" minOccurs="0" maxOccurs="unbounded"/>
        </xs:sequence>
    </xs:complexType>

    <xs:simpleType name="tUserActionRecordable">
        <xs:restriction base="xs:boolean"/>
    </xs:simpleType>

    <xs:complexType name="tPChProfile">
        <xs:sequence>
            <xs:element name="PChList" minOccurs="1" maxOccurs="unbounded">
                <xs:complexType>
                    <xs:sequence>
                        <xs:element name="PChItem" minOccurs="1" maxOccurs="unbounded">
                            <xs:complexType>
                                <xs:sequence>
                                    <xs:element name="PChItemServiceType" type="xs:string" />
                                    <xs:element name="PChItemContentId" type="xs:anyURI" />
                                    <xs:element name="PChItemStartTime" type="xs:dateTime" />
                                    <xs:element name="PChItemEndTime" type="xs:dateTime" />
                                    <xs:element name="PChItemOffset" type="xs:duration" />
                                </xs:sequence>
                            </xs:complexType>
                        </xs:element>
                    </xs:sequence>
                    <xs:attribute name="PChId" type="xs:anyURI" use="required"/>
                </xs:complexType>
            </xs:element>
        </xs:sequence>
    </xs:complexType>
```


Koninklijke KPN NV - Exhibit 2010
Samsung Electronics America, Inc. et al. v. Koninklijke KPN NV PTAB-IPR2025-00502
Page 159 of 237

```
    <xs:complexType name="tUGCProfile">
            <xs:sequence>
                <xs:element name="UGCProfile" minOccurs="0" maxOccurs="unbounded">
                    <xs:complexType>
                        <xs:sequence>
                            <xs:element name="UGCStorageLimit" type="xs:unsignedInt"/>
                            <xs:element name="AuthorizedControlUser" type="xs:string" />
                        </xs:sequence>
                    </xs:complexType>
                </xs:element>
            </xs:sequence>
    </xs:complexType>

</xs:schema>
```

NOTE 1: The list of parameter that could be sent to the UE over UT is specified in the procedures clause.

NOTE 2: The UE profile used for service discovery may be considered in the same XML schema, indicating explicitly which part to used for the different purposes.

Koninklijke KPN NV - Exhibit 2010
Samsung Electronics America, Inc. et al. v. Koninklijke KPN NV PTAB-IPR2025-00502
Page 160 of 237

Annex D (normative): XML Schema for IPTV commands

```
<?xml version="1.0" encoding="UTF-8"?>
<xs:schema
targetNamespace="urn:org:etsi:ngn:params:xml:ns:iptvactiondatacommand"
xmlns="urn:org:etsi:ngn:params:xml:ns:iptvactiondatacommand"
xmlns:bc ="urn:org:etsi:ngn:params:xml:ns:iptvbcserviceactiondata"
xmlns:co ="urn:org:etsi:ngn:params:xml:ns:iptvcodserviceactiondata"
xmlns:np ="urn:org:etsi:ngn:params:xml:ns:iptvnpvrserviceactiondata"
xmlns:cp ="urn:org:etsi:ngn:params:xml:ns:iptvcpvrserviceactiondata"
xmlns:ci ="urn:org:etsi:ngn:params:xml:ns:iptvcontentinsertionserviceactiondata"

xmlns:xs="http://www.w3.org/2001/XMLSchema" elementFormDefault="qualified"
attributeFormDefault="unqualified">

<xs:import namespace="urn:org:etsi:ngn:params:xml:ns:iptvbcserviceactiondata"
schemaLocation="Annex K_XML Schema for BC service related data.xsd"/>

<xs:import namespace="urn:org:etsi:ngn:params:xml:ns:iptvcodserviceactiondata"
schemaLocation="Annex K_XML Schema for CoD service related data.xsd"/>

<xs:import namespace="urn:org:etsi:ngn:params:xml:ns:iptvnpvrserviceactiondata"
schemaLocation="Annex K_XML Schema for N-PVR service related data.xsd"/>

<xs:import namespace="urn:org:etsi:ngn:params:xml:ns:iptvcpvrserviceactiondata"
schemaLocation="Annex K_XML Schema for CPVR service related data.xsd"/>

<xs:import namespace="urn:org:etsi:ngn:params:xml:ns:iptvcontentinsertionserviceactiondata"
schemaLocation="Annex K_XML Schema for Content Insertion service related data.xsd"/>

    <xs:element name="IPTVActionDataCommand">
        <xs:complexType>
            <xs:choice>
                <xs:element name="Notify" type="tNotify" minOccurs="0" maxOccurs="unbounded"/>
                <xs:element name="Record" type="tRecord" minOccurs="0" maxOccurs="unbounded"/>
                <xs:element name="SwitchToTM" type="tSwitchToTM" minOccurs="0"
maxOccurs="unbounded"/>
                <xs:element name="SwitchToBC" type="tSwitchToBC" minOccurs="0"
maxOccurs="unbounded"/>
            </xs:choice>
        </xs:complexType>
    </xs:element>

    <xs:complexType name="tNotify">
        <xs:choice>
            <xs:element ref="bc:IPTVBcActionData" />
            <xs:element ref="co:IPTVCodActionData" />
            <xs:element ref="np:IPTVNpvrActionData" />
            <xs:element ref="cp:IPTVCpvrActionData" />
            <xs:element ref="ci:IPTVContentInsertionActionData"/>
        </xs:choice>
    </xs:complexType>

    <xs:complexType name="tRecord">
        <xs:choice>
            <xs:element ref="bc:IPTVBcActionData" />
            <xs:element ref="np:IPTVNpvrActionData" />
            <xs:element ref="cp:IPTVCpvrActionData" />
        </xs:choice>
    </xs:complexType>

    <xs:complexType name="tSwitchToTM">
        <xs:choice>
            <xs:element ref="bc:IPTVBcActionData" />
        </xs:choice>
    </xs:complexType>

    <xs:complexType name="tSwitchToBC">
        <xs:choice>
            <xs:element ref="bc:IPTVBcActionData" />
        </xs:choice>
    </xs:complexType>
```


Koninklijke KPN NV - Exhibit 2010
Samsung Electronics America, Inc. et al. v. Koninklijke KPN NV PTAB-IPR2025-00502
Page 161 of 237

```
</xs:schema>
```

NOTE: Table D.1 recaps the presence of each element in the Service Action Data for the different commands.

Table D.1

	Notify UE - > CN	Notify UE < - CN	Record UE - > CN	SwitchToTM UE - > CN	SwitchToBC UE - > CN
IPTVBcActionData					
BCServiceId	O	M	M	M	M
ProgrammeId	O	O	O	x	x
Bookmark	O	O	M	x	x
BookmarkExpiryTime	O	O	O	x	x
IPTVCodActionData					
CoDId	M	M	NA	NA	NA
CoDDeliveryStatus	M(parked)	M			
CoDOffset	M	M			
CoDOffsetExpiryTime	x	O			
IPTVNpvrActionData					
NPVRContentId	NA	M	O	NA	NA
BCServiceId		M	M		
RecordStartDate		M	O		
RecordEndDate		M	O		
RecordStatus		M	x		
RecordOffset		M	O		
RecordOffsetExpiryTime		O	x		
RecordExpiryTime		O	x		
IPTVCpvrActionData					
CPVRContentId	NA	M	O	NA	NA
BCServiceId		M	M		
TargetUEId		M	M		
RecordStartDate		M	O		
RecordEndDate		M	O		
RecordStatus		M	X		
IPTVContentInsertionActionData					
IPTVContentIdentifier	M	M	NA	NA	NA
InsertedContentIdentifier	M	M			
InsertionTime	O	O			
InsertionStatus	M	M			

NOTE: M = Mandatory.
O = Optional.
X = Not included.
NA = Not Applicable.

Koninklijke KPN NV - Exhibit 2010
Samsung Electronics America, Inc. et al. v. Koninklijke KPN NV PTAB-IPR2025-00502
Page 162 of 237

Annex E (normative): XML schema for IPTV presence document extension

This XML schema is be used when the presence documents are published by the UE as described in clause 5.1.6.

```
<xs:schema targetNamespace="urn:org:etsi:ngn:params:xml:ns:iptvpresence"
xmlns:ns="urn:org:etsi:ngn:params:xml:ns:iptvpresence"
xmlns:oma="urn:oma:xml:prs:pidf:oma-pres"
xmlns:ss="urn:org:etsi:ngn:params:xml:ns:iptv"
xmlns:xs="http://www.w3.org/2001/XMLSchema"
elementFormDefault="qualified"
attributeFormDefault="unqualified">

<xs:complexType name="tBCServicePresence">
    <xs:sequence>
        <xs:element name="CurrentBCServiceID" type="ns:tBCServiceID" minOccurs="0"/>
        <xs:element name="CurrentBCProgramID" type="ns:tCurrentBCProgramID" minOccurs="0"/>
        <xs:any namespace="##other" processContents="lax" minOccurs="0" maxOccurs="unbounded"/>
    </xs:sequence>
</xs:complexType>

<xs:complexType name="tCoDServicePresence">
    <xs:sequence>
        <xs:element name="CurrentCODContentID" type="ns:tCurrentContentID" minOccurs="0"/>
        <xs:any namespace="##other" processContents="lax" minOccurs="0" maxOccurs="unbounded"/>
    </xs:sequence>
</xs:complexType>

<xs:complexType name="tNPVRServicePresence">
    <xs:sequence>
        <xs:element name="CurrentNPVRContentID" type="ns:tCurrentContentID" minOccurs="0"/>
        <xs:any namespace="##other" processContents="lax" minOccurs="0" maxOccurs="unbounded"/>
    </xs:sequence>
</xs:complexType>

<xs:simpleType name="tCurrentBCProgramID" final="list restriction">
    <xs:restriction base="xs:string">
        <xs:minLength value="0"/>
        <xs:maxLength value="256"/>
    </xs:restriction>
</xs:simpleType>

<xs:simpleType name="tCurrentContentID" final="list restriction">
    <xs:restriction base="xs:string">
        <xs:minLength value="0"/>
        <xs:maxLength value="256"/>
    </xs:restriction>
</xs:simpleType>

<xs:simpleType name="tBCServiceID" final="list restriction">
    <xs:restriction base="xs:string">
        <xs:minLength value="0"/>
        <xs:maxLength value="16"/>
    </xs:restriction>
</xs:simpleType>

<xs:complexType name="tServiceAccessHistory">
  <xs:sequence>
    <xs:element name="ServiceType" type="ns:tServiceType" minOccurs="0"/>
    <xs:element name="ReferencedContentID" type="ns:tReferencedContentID" minOccurs="0"/>
    <xs:element name="Rating" type="ns:tRating" minOccurs="0"/>
    <xs:element name="AccessStartTime" type="xs:dateTime" minOccurs="0"/>
    <xs:element name="AccessEndTime" type="xs:dateTime" minOccurs="0"/>
    <xs:element name="HistoryExpireTime" type="ns:tHistoryExpireTime" minOccurs="0"/>
    <xs:any namespace="##other" processContents="lax" minOccurs="0" maxOccurs="unbounded"/>
  </xs:sequence>
</xs:complexType>

<xs:simpleType name="tServiceType" final="list restriction">
  <xs:restriction base="xs:string">
    <xs:enumeration value="BC"/>
    <xs:enumeration value="CoD"/>
    <xs:enumeration value="PVR"/>
    <xs:enumeration value="Time Shift"/>
```


Koninklijke KPN NV - Exhibit 2010
Samsung Electronics America, Inc. et al. v. Koninklijke KPN NV PTAB-IPR2025-00502
Page 163 of 237

```
    <xs:enumeration value="UGC"/>
    <xs:enumeration value="SSC"/>
    <xs:enumeration value="PSC"/>
  </xs:restriction>
</xs:simpleType>

<xs:simpleType name="tReferencedContentID" final="list restriction">
   <xs:annotation>
        <xs:documentation xml:lang="en">
            Identifier of the associated content accessed by the user in the context of specific
ServiceType.
        </xs:documentation>
    </xs:annotation>
    <xs:restriction base="xs:string">
      <xs:minLength value="0"/>
    <xs:maxLength value="16"/>
   </xs:restriction>
</xs:simpleType>

<xs:simpleType name="tRating" final="list restriction">
  <xs:restriction base="xs:unsignedByte">
    <xs:minInclusive value="0"/>
    <xs:maxInclusive value="5"/>
  </xs:restriction>
</xs:simpleType>

<xs:simpleType name="tHistoryExpireTime" final="list restriction">
  <xs:restriction base="xs:duration">
    <xs:minInclusive value="PT0H"/>
    <xs:maxInclusive value="PT10000H"/>
  </xs:restriction>
</xs:simpleType>

<xs:complexType name="tServiceStateDataPresence">
  <xs:sequence>
    <xs:element name="IPTVServiceState" type="ns:tIPTVServiceState" maxOccurs="unbounded"/>
  </xs:sequence>
</xs:complexType>

<xs:complexType name="tIPTVServiceState">
  <xs:annotation>
    <xs:documentation xml:lang="en">
      Depending on the value of the ServiceType some elements may or may not be applicable.
        This XML Schema is recursive for ServiceTypes "SSC" and "PSC".
    </xs:documentation>
  </xs:annotation>
  <xs:sequence>
    <xs:element name="ServiceType" type="ns:tServiceType" minOccurs="0"/>
    <xs:element name="ReferencedContentID" type="ns:tReferencedContentID" minOccurs="0"/>
    <xs:element name="ServiceState" type="ns:tServiceState" minOccurs="0"/>
    <xs:element name="ServiceStateInformation" type="xs:string" minOccurs="0"/>
    <xs:element name="ServiceStateExpireTime" type="xs:dateTime" minOccurs="0"/>
    <xs:element name="TrickPlayActivated" type="xs:boolean" minOccurs="0"/>
    <xs:element name="SSCRoomID" type="xs:string" minOccurs="0"/>
    <xs:element name="PSCid" type="xs:string" minOccurs="0"/>
    <xs:element name="IPTVServiceState" type="ns:tIPTVServiceState" minOccurs="0"
    maxOccurs="unbounded"/>
    <xs:any namespace="##other" processContents="lax" minOccurs="0" maxOccurs="unbounded"/>
  </xs:sequence>
</xs:complexType>

<xs:complexType name="tServiceState">
  <xs:simpleContent>
    <xs:extension base="ns:tServiceStateEnumeration">
       <xs:attribute name="extension" type="xs:string"/>
    </xs:extension>
  </xs:simpleContent>
</xs:complexType>

<xs:simpleType name="tServiceStateEnumeration">
  <xs:restriction base="xs:string">
    <xs:enumeration value="Play"/>
    <xs:enumeration value="Pause"/>
    <xs:enumeration value="Recording"/>
    <xs:enumeration value="Fast-forward"/>
    <xs:enumeration value="Rewinding"/>
    <xs:enumeration value="Picture-in-picture"/>
    <xs:enumeration value="Extension"/>
```


Koninklijke KPN NV - Exhibit 2010
Samsung Electronics America, Inc. et al. v. Koninklijke KPN NV PTAB-IPR2025-00502
Page 164 of 237

```
  </xs:restriction>
</xs:simpleType>

</xs:schema>
```

NOTE: Here are two examples of tServiceState.
<tServiceState>Play</tServiceState>
<tServiceState extension="Skipping">Extension</tServiceState>

Koninklijke KPN NV - Exhibit 2010
Samsung Electronics America, Inc. et al. v. Koninklijke KPN NV PTAB-IPR2025-00502
Page 165 of 237

Annex F (informative): Example of presence information update after channel-change

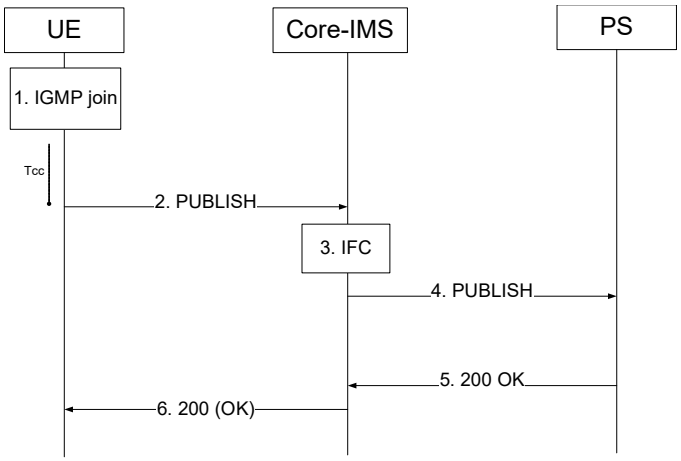

Figure F.1

1) **IGMP Join request (UE to Core-IMS):**

   The User wishes to change watching channel. The UE sends an IGMP join request to the multicast group corresponding to the selected channel.

   The timer Tcc is started.

2) **PUBLISH request (UE to Core-IMS):**

   After Tcc timer expiration, to initiate the publication, the UE generates a PUBLISH request according to ES 283 030 [21].

   The UE indicates the new watched channel in the present document.

3) **IFC:**

   The S-CSCF routes the request to the Presence Server according to the IFC.

4) **PUBLISH request (Core-IMS to Presence Server):**

   The Core-IMS forwards the PUBLISH request to the presence server thanks to the configured IFC. For example, for user1_public1@home1.net the Core-IMS has originating initial Filter Criteria with Service Point Trigger of Method = PUBLISH AND Event = "presence" AND Request-URI = "sip:user1_public1@home1.net" that informs the S-CSCF to route the PUBLISH request to the PS ps.home1.net.

5) **200 (OK) response (PS to Core-IMS):**

   The Presence Server evaluates the PUBLISH request and update presence information (i.e. currently watched channel).

   It replies with a SIP 200 OK to the Core IMS.

Koninklijke KPN NV - Exhibit 2010
Samsung Electronics America, Inc. et al. v. Koninklijke KPN NV PTAB-IPR2025-00502
Page 166 of 237

6) 200 (OK) response (Core-IMS to UE):

The Core-IMS forwards the SIP 200 OK to the UE.

Koninklijke KPN NV - Exhibit 2010
Samsung Electronics America, Inc. et al. v. Koninklijke KPN NV PTAB-IPR2025-00502
Page 167 of 237

Annex G (informative): Example of presence document extension

The following example describes the particular case of a BC service:

```
    <tuple id="serv11">
        <status>
            <basic>open</basic>
        </status>
        <oma:service-description>
            <oma:service-id>IPTV-BC</oma:service-id>
            <oma:version>x.y</oma:version>
            <oma:description>IPTV BroadCast service</oma:description>
        </oma:service-description>
        <caps:servcaps>
            <caps:audio>true</caps:audio>
            <caps:video>true</caps:video>
        </caps:servcaps>
        <BC>
            <currentBCServiceID>tv:BBC1.co.uk</currentBCServiceID>
            <currentBCProgramID>cid:the_weakest_link@bbc1.co.uk</currentBCProgramID>
        </BC>
        <rpid:class>IPTV</rpid:class>
        <dm:deviceID>mac:8asd7d7d70</dm:deviceID>
                <note>comment1</note>
    </tuple>
The following example describes the particular case of a BC service access history item:
    <tuple id="serv18">
        <status>
            <basic>open</basic>
        </status>
        <oma:service-description>
            <oma:service-id>IPTV-SAH</oma:service-id>
            <oma:version>x.y</oma:version>
            <oma:description>IPTV service access history</oma:description>
        </oma:service-description>
        <caps:servcaps>
            <caps:audio>true</caps:audio>
            <caps:video>true</caps:video>
        </caps:servcaps>
        <SAH>
            <ServiceType>BC</ServiceType>
            <ReferencedContentID>tv:BBC1.co.uk</ReferencedContentID>
            <Rating>2</Rating>
            <AccessStartTime>2009-08-06T20:08:00</AccessStartTime>
            <AccessEndTime>2009-08-06T20:40:25</AccessEndTime>
            <HistoryExpireTime>PT24H</HistoryExpireTime>
        </SAH>
        <rpid:class>IPTV</rpid:class>
        <dm:deviceID>mac:8asd7d7d70</dm:deviceID>
        <note>comment1</note>
    </tuple>
```

The following example describes the particular case of an IPTVServiceStateData item:

Koninklijke KPN NV - Exhibit 2010
Samsung Electronics America, Inc. et al. v. Koninklijke KPN NV PTAB-IPR2025-00502
Page 168 of 237

Annex H (informative): Summary of standards and protocols for IMS based IPTV

This informative annex provides summary of standards and protocols version (specification compliance) required by IMS based IPTV in mentioned reference points.

NOTE: In case of any inconsistencies with the normative text, the normative text applies.

H.1 SIP/SDP protocol

Usage the SIP/SDP protocol across the following reference points is described in clause 5:

- reference point Gm;
- reference point ISC;
- reference point y2.

Following functional entities are SIP/SDP capable:

- UE, SCF, SDP, MCF, Core IMS.

Following SIP protocol model explain which SIP request method are used for particular procedure.

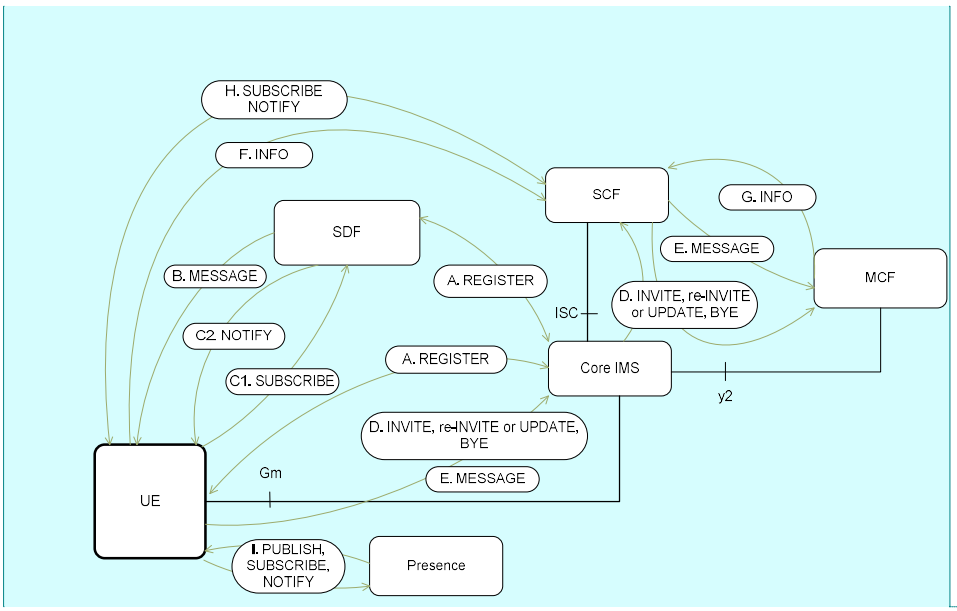

Figure H.1: IMS based IPTV - SIP protocol model

A. UE send REGISTER to Core IMS and SDF.

B. Service discovery Push mode - SDF send message MESSAGE with discovery information.

C. Service discovery Pull mode - UE used SUBSCRIBE to SDF over Core IMS, SDF send NOTIFY with service discovery information (also when changed).

Commented [zhouzp3]: Eugen will make a CR to update this Figure and the following description.

Koninklijke KPN NV - Exhibit 2010
Samsung Electronics America, Inc. et al. v. Koninklijke KPN NV PTAB-IPR2025-00502
Page 169 of 237

D. Service initiation, modification and teardown from UE via Core IMS to SCF (INVITE, re-INVITE or UPDATE, BYE).

E. UE sends a SIP MESSAGE request to SCF requiring NPVR service (SCF send MESSAGE to MCF).

F. Optional - procedures for join multicast group (clause 8.1.1) the UE may inform SCF of the selected channel (sending INFO message).

G. INFO message to send COD Service action data information to SCF.

H. Service Attachment - PULL mode is used SUBSCRIBE and NOTIFY methods.

I. Optional - Presence used for channel watching information.

H.1.1 Protocol specifications used for SIP/SDP

This clause contains list of protocol specifications required for IMS based IPTV implementation used as references in clause 5 or other related to SIP/SDP specifications. This clause contains also summary of methods required for implementation as mandatory and also optional.

Several Core IMS procedures are explicitly used by IMS based IPTV (not limited) like IMS registration, session initiation, modification and termination.

SIP methods like REGISTER, INVITE, UPDATE, PUBLISH, NOTIFY, MESSAGE, SUBSCRIBE are used in IMS based IPTV.

The following tables explain relation of used specification for specified function entity towards other entities. Last column summarizes requirements for implementation for specified functional entity (which specification are required for implementation).

Table H.1: SIP/SDP protocol related specification for UE

Specifications for: UE	IMS core	SDF	SCF	MCF	Summary of required implementation
Ref. point	Gm <->	Via IMS core <->	Via IMS core <->	---	UE
REGISTER [20]	(M)	(M) 3rd party			(M)
INVITE, re-INVITE or UPDATE, BYE [20]	(M)		(M)		(M)
MESSAGE [22] and [20] MESSAGE is used only by "Push mode" service discovery and "N-PVR" service			(M)		(M)
PUBLISH [21] for IPTV presence (optional)			(O)		(O)
SUBSCRIBE [20] Pull mode		(M) clause 5.1.2A.1			(M)
NOTIFY [25] In pull mode			(M)		(M)
SIP INFO [20]			(O)		(O)
Annex [Y] in pull mode			(M)		(M)
OMA-TS-Presence-SIMPLE-V1 [23]			(O)		(O)
RFC 5875 [26[26[26]			(O)		(O)
RFC 5874 [15]			(O)		(O)

Koninklijke KPN NV - Exhibit 2010
Samsung Electronics America, Inc. et al. v. Koninklijke KPN NV PTAB-IPR2025-00502
Page 170 of 237

Table H.2: SIP/SDP protocol related specification for Core IMS

Specification: IMS core	UE	SDF	SCF	MCF	Summary of required implementation
Ref. point	Gm <->	ISC <->	ISC <->	y2 <->	IMS core
ES 283 003 [20]	(M)	(M) ISC	(M) ISC	(M)	Core IMS entities
REGISTER, INVITE [20]	(M)	(M)			(M)
NOTIFY [25] [29] Pull mode	(M)	(M)			(M)
NOTE: Table mentions just SIP methods explicitly used in IMS based IPTV procedures but does not exclude any other usage of other methods.					

Table H.3: SIP/SDP protocol related specification for SDF

Specification: SDF	UE	IMS core	SCF	MCF	Summary of required implementation
Ref. point	Push mode -> Pull mode <->: Via IMS core	ISC <->	---	---	SDF
REGISTER [20]					third-party registration
Push mode [20]	(M)				(M)
Pull mode NOTIFY [29]	(M) clause 5.7.1.4				(M) clause 5.7.1.4
Pull mode user's identity verification [29]	(M)				(M)

Table H.4: SIP/SDP protocol related specification for SCF

Specification: SCF	UE	IMS core	SDF	MCF	Summary of required implementation
Ref. point	Ut <->	ISC <->	Via IMS core	Via IMS core	SCF
ES 283 003 [20]					SCF act as an AS acting as a terminating UA for BC service or SCF act as an AS acting as an originating UA for BC service SCF act as a B2BUA when N-PVR service is used (SIP dialog is established UA<=>SCF and SCF<=> MCF) SCF is a proxy or a B2BUA when CoD service is used
INVITE, re-INVITE or UPDATE, BYE [20]		(M)		(M)	(M) Via IMS core

Table H.5: SIP/SDP protocol related specification for MCF

Specification: MCF	UE	IMS core	SDF	SCF	Summary of required implementation
Ref. point		y2 <->		Via IMS core	MCF
ES 283 003 [20]		(M)		(M)	MCF act as a generic terminating UA (M)
REDIRECT SIP [2] BC with Trick play		(M)		(M)	(O) clause 5.1.3.3

Koninklijke KPN NV - Exhibit 2010
Samsung Electronics America, Inc. et al. v. Koninklijke KPN NV PTAB-IPR2025-00502
Page 171 of 237

H.2 HTTP protocol

Usage of the HTTP protocol across the following interfaces is described in clause 6:

- interface Xa;
- interface Ut.

HTTP capable functional entities:

- UE, SCF, SSF.

Table H.6: Summary of specifications compliancy for HTTP capable FEs

Specification:	UE	SSF	SCF
RFC 4825 [9]	XCAP client (M)	NA	XCAP sever (M) HTTP PUT, HTTP GET or HTTP DELETE
RFC 2246 [323232]	(M)	(M)	(M)
TS 187 003 [10]	(M)	(M)	NA
TS 124 109 [11]	NA	(O)	(O)
TS 183 023 [12]	NA	(O)	(O)
TS 102 034 [3]	clause 5.4.2.2 (M)	clause 5.2.6 (M)	NA
TS 102 539 [13]	clauses 4.1.2.2.2 and 4.2 (M)	clauses 4.1.2 and 4.2 (M)	NA
TS 133 222 [14]	(O)	(O)	NA
RFC5874[15]	(O)	NA	(O)
OMA OMA-TS-BCAST_Service_Guide-V1_0 [6]	clause 5.4.3 (M)	clause 5.4.3.3 (M)	NA
NOTE: (M) - Mandatory. (O) - Optional. NA - NOT Applicable.			

Formatted: Font: Check spelling and grammar

H.3 RTSP/SDP protocol

Usage of the RTSP/SDP protocol across the following interfaces is described in clause 7:

- interface Di, Dj, Ds or lz.

RTSP/SDP capable functional entities:

- UE, MCF.

H.3.1 Protocol specifications used for RTSP/SDP

This clause contain summary of RTSP methods required for implementation in IMS based IPTV as mandatory or optional (as references to clause 7 or other related to RTSP). The following tables show the differences by using RTSP method in compare with RFC 2326 [8].

Koninklijke KPN NV - Exhibit 2010
Samsung Electronics America, Inc. et al. v. Koninklijke KPN NV PTAB-IPR2025-00502
Page 172 of 237

Table H.7

RTSP Method	Direction: C = client - UE; S = Server - MCF;	RFC 2326 [8]	DVB Requirement TS 102 034 [3]		TISPAN IMS based IPTV	
			LMB	MBwTM and CoD	Method 1	Method 2
ANNOUNCE	C→S	MAY	MAY	MAY	N.A.	N.A.
ANNOUNCE	S→C	MAY	**SHOULD**	**SHOULD**	**(M)**	**(M)**
DESCRIBE	C→S	SHOULD	SHOULD	SHOULD	**N.A.**	**(M)**
GET_PARAMETER	C→S	MAY	**SHOULD**	**SHOULD**	**(M)**	N.A.
GET_PARAMETER	S→C	MAY	MAY	MAY	N.A.	N.A.
OPTIONS	C→S	SHALL	SHALL	SHALL	(M)	**N.A.**
OPTIONS	S→C	MAY	MAY	MAY	N.A.	N.A.
PAUSE	C→S	SHOULD	**N.A.**	**SHALL**	**(M)**	**(M)**
PLAY	C→S	SHALL	SHALL	SHALL	(M)	(M)
REDIRECT	S→C	MAY	**SHALL**	**SHALL**	**N.A.**	**N.A.**
SETUP	C→S	SHALL	SHALL	SHALL	**N.A.**	(M)
TEARDOWN	C→S	SHALL	SHALL	SHALL	**N.A.**	(M)
SET_PARAMETER	C→S	MAY	N.A.	N.A.	**(M)**	N.A.
SET_PARAMETER	S→C	MAY	N.A.	N.A.	N.A.	N.A.
RECORD	C→S	MAY	N.A.	N.A.	N.A.	N.A.

NOTE: (M) = Mandatory.
(O) = Optional.
N.A. = Not Applied.
The text in **bold** shows differences comparing to RFC 2326 [8] table 2.

H.4 UDP/RTP/RTCP protocol

Usage of the UDP/RTP/RTCP protocol across the following interfaces is described in clause 11:

- interface Xd;
- interface Di, Dj, Ds or Iz.

UDP/RTP/RFTCP capable functional entities:

- UE, MDF, MSAS, SC, SC'.

H.5 IGMP/MLD protocol

Usage of the IGMP/MLD protocol across the following interfaces is described in clause 8:

- interface Dj, Di, Ds, or Iz.

IGMP/MLD capable functional entities:

- UE, Transporting functions (ECF/EFF), MDF.

If IPv4 is used for the transport, the UE conforms to RFC 3376 [28] (IGMPv3).

If IPv6 is used for the transport, the UE conforms to RFC 3810 [29] (MLDv2).

Backward compatibility rules between the UE and the Transport Function have to be done conforming to RFC 3376 [28], clause 7 and RFC 3810 [29], clause 8.

Koninklijke KPN NV - Exhibit 2010
Samsung Electronics America, Inc. et al. v. Koninklijke KPN NV PTAB-IPR2025-00502
Page 173 of 237

UE need to support at least:

- IGMP v3 unsolicited Membership Report or a MLDv2 Multicast Listener Report Message.
- IGMP v3 Membership Report Message or MLD v2 Multicast Listener Report Message.

H.6 Diameter protocol

Use of Diameter complies to the following specifications:

- TS 183 017 [i.2i.2~~i.2~~] in case of the Gq' interface.
- ES 283 035 [363~~36~~] in case of the e2 interface.
- TS 183 033 [i.3i.3~~i.3~~] in case of the Cx and Dx' interfaces.
- TS 129 329 [i.4i.4~~i.4~~] in case of the Sh and Dh interfaces.

Diameter capable functional entities:

- CoreIMS, SCF, SDF.

H.7 DVBSTP protocol

Usage of the DVBSTP protocol across the following interface is described in clause 9:

- interface Xa.

DVBSTP capable functional entities (Optionally):

- UE, SSF.

H.8 FLUTE protocol

Usage of the FLUTE protocol across the following interface is described in clause 10:

- interface Xa.

FLUTE capable functional entities (Optionally):

- UE, SSF.

Formatted: Font: Check spelling and grammar

Koninklijke KPN NV - Exhibit 2010
Samsung Electronics America, Inc. et al. v. Koninklijke KPN NV PTAB-IPR2025-00502
Page 174 of 237

Annex I (normative): Procedures for discovery of SDFs prior to service attachment

This annex describes a set of alternatives for the UE to identify the SDFs and/or the service provider domain information associated with them prior to service attachment procedures.

The order in which these alternatives are executed or priority between the alternatives when executed simultaneously is outside of the scope of the present document.

I.1 Manual configuration based manual discovery

The UE may be manually configured with the one or more instances of the following information.

- The Service Provider Name: This provides the name of the Service Provider to connect to first. It is of variable length.
- ServiceProviderDomainName: This provides the domain name corresponding to Service provider. It is of variable length.
- ServiceDiscoveryServer: This specifies the address of the SDF associated with the SP and it is specified as an IMS Public Service Identifier or IP address or URL.
- The IMS PSI value shall be specified for IMS-based Service Discovery Function.
- The IPAddress or URL may be specified for non-SIP-AS based Service Discovery Function.

I.2 DHCP-based discovery

In addition to acquiring its IP address from the DHCP server, in this mechanism the UE can acquire information on SDFs and associated Service Provider(s) information using appropriate vendor class identifier DHCP options.

I.2.1 Using DHCP option 43/60

The client may send a Vendor class Identifier DHCP option 60 as specified in ES 283 003 [20] when it requests a DHCP lease for server. The option is specified with the vendor-class identifier as "ETSI_TISPAN_IPTV_SDS"

The DHCP server delivers the SDF information via Vendor-Specific Information DHCP option 43 packed in a binary buffer as defined in ES 283 003 [20]. The format of the binary buffer containing the SDF information is specified in clause I.2.3.

I.2.2 Using DHCP option 124/125

This vendor identifier specific DHCP option is recommended to be used when there is a need to support DHCP options from multiple vendors as specified in RFC 3925 [17].

The client may send a Vendor -Identifying Vendor Class option 124 as specified in RFC 3925 [17] when it requests a DHCP lease for server. The option is specified with an enterprise-number of 13019 (ETSI) and the vendor-class-data identifier as "ETSI_TISPAN_IPTV_SDS".

The DHCP server delivers the SDF information via Vendor-Identifying Vendor-Specific Information DHCP option 125 packed in a binary buffer as defined in RFC 3925 [17]. The enterprise-number shall be set as 13109 (ETSI). The format of the binary buffer containing the SDF information is specified in clause I.2.3.

Koninklijke KPN NV - Exhibit 2010
Samsung Electronics America, Inc. et al. v. Koninklijke KPN NV PTAB-IPR2025-00502
Page 175 of 237

I.2.3 Format of DHCP payload

The format of the vendor-specific binary buffer containing SDF addresses returned by the DHCP server is as follows.

It is a list of sub-options starting with sub-option number (one byte), its length (one byte) and its value (list of bytes).

The following vendor-specific sub-options are defined:

- Sub-Option: IMS_IPTV_SP: Code = 0x01. This option provides the name of the Service Provider to connect to first. It is of variable length and it is Optional.
- Sub-Option: IMS-IPTV-SPDOMAIN: Code= 0x02. This option provides the domain name corresponding to Service provider. It is of variable length and it is Optional.
- Sub-Option: IMS-IPTV-SDF: Code=0x03. This option carries either the (1) IMS PSI value, (2) the IPAddress of SDF or (3) the fully-qualified domain name of the Service Discovery Server associated with the Service Provider. This is Mandatory.
- A one byte "enc" field is used to indicate the type of encoding.
  - If the "enc" field has a value of _0x00, then this indicates an IMS PSI value. The "enc" field is followed by the bytes corresponding to the IMS PSI. This value shall be used for IMS-based service discovery function.
  - If the "enc" field has a value of _0x01, then this indicates an IP Address. The "enc" field is followed by 4 bytes corresponding to the IPAddress. This value may be used for non-SIP AS service discovery function.
  - If the "enc" field has a value of 0x02, then this indicates a DNS hostname. The "enc" field is followed by a sequence of labels, encoded according to clause 3.1 of RFC 1035 [18]. This value may be used for non-SIP AS service discovery function.
- The code of 0xFF is used to indicate end of the buffer.

The availability of the service provider SDF information at the Network Provider DHCP server is subject to business policies between the service provider and network provider.

I.3 DNS Service Records (SRV) - based discovery

In this case, the SD servers are discovered using the DNS SRV mechanism in accordance with RFC 2782 [313131], with the following input parameters:

Formatted: Font: Check spelling and grammar

- Service: Defined as "tispan-iptv-service". This is the symbolic name of the desired service; to be defined and registered with IANA.
- Protocol: Can take values "http" or "sip". Specifies the protocol to contain the particular service.
- Domain name: the domain for which the returned records are valid; the value can be derived from the following:
  - Domain from manual configuration.
  - Domain from network attachment phase (DHCP server).
  - Domain from IMS home domain.

The output of the DNS SRV lookup is an ordered list of domain name, each pointing to a SDF server available within the specified Domain name.

Koninklijke KPN NV - Exhibit 2010
Samsung Electronics America, Inc. et al. v. Koninklijke KPN NV PTAB-IPR2025-00502
Page 176 of 237

I.4 TR-069 based discovery

In this case, the UE discovers the addresses of the SDFs and associated Service Provider information during remote configuration procedures using the TR-069 [37] protocol.

Specifically, upon successful UE network attachment and successful creation of a management session with the remote configuration server, the CNGCF may provide the UE with a listing of IPTV service providers and associated SDF servers that it knows about. How the remote configuration server at the CNGCF is provided with this information is beyond the scope of the present document.

An ordered listing of one or more instances of the following elements may be delivered:

- The Service Provider Name: This provides the name of the Service Provider to connect to first. It is of variable length.
- ServiceProviderDomainName: This provides the domain name corresponding to Service provider. It is of variable length.
- ServiceDiscoveryServer: This specifies the address of the SDF associated with the SP and it is specified as an IMS Public Service Identifier or IP address or URL:
  - The IMS PSI value shall be specified for IMS-based Service Discovery Function.
  - The IPAddress or URL may be specified for non-SIP-AS based Service Discovery Function.

NOTE: The exact object extension used to carry the above information during remote configuration is beyond scope of the present document.

Koninklijke KPN NV - Exhibit 2010
Samsung Electronics America, Inc. et al. v. Koninklijke KPN NV PTAB-IPR2025-00502
Page 177 of 237

Annex J (informative): Integration of non SIP AS service discovery function

J.1 Integration of non SIP AS service discovery Function based on DVB IPTV

J.1.1 User Equipment (UE)

J.1.1.1 Procedure for service attachment

In order to discover the list of SDF, the UE will follow the entry points discovery steps as defined in TS 102 034 [3], clause 5.2.4.

The UE will use HTTP or DVBSTP protocols in order to retrieve the service provider discovery information, conforming to TS 102 034 [3], clause 5.4.

NOTE: It is also possible that the UE holds a hard-coded parameter containing the entry point information, or that an out-of-band mechanism exists for the UE to retrieve this information.

J.1.1.2 Procedure for service selection

J.1.1.2.1 Request of DVB SD&S

The UE will use HTTP or DVBSTP protocols in order to retrieve the SD&S information, conforming to TS 102 034 [3], clause 5.4.

J.1.1.2.2 Request of DVB BCG

The UE will use HTTP, DVBSTP or HTTP/SOAP protocols in order to retrieve the BCG information, conforming to TS 102 539 [13], clause 4.

J.1.2 Service Discovery Function (SDF)

J.1.2.1 Procedure for service attachment

The SDF will provide to the UE the service provider discovery information conforming to TS 102 034 [3], clause 5.2.5.

The SDF will use HTTP and DVBSTP protocols, conforming to TS 102 034 [3], clause 5.4.

J.1.3 Service Selection Function (SSF)

J.1.3.1 Procedure for service selection

J.1.3.1.1 Delivery of DVB SD&S

The SSF will provide to the UE the SD&S information conforming to TS 102 034 [3], clause 5.2.6.

The SSF will use HTTP and DVBSTP protocols, conforming to TS 102 034 [3], clause 5.4.

Koninklijke KPN NV - Exhibit 2010
Samsung Electronics America, Inc. et al. v. Koninklijke KPN NV PTAB-IPR2025-00502
Page 178 of 237

J.1.3.1.2 Delivery of DVB BCG

The SSF will provide to the UE the BCG information conforming to TS 102 539 [13].

The SSF will use HTTP, DVBSTP, and HTTP/SOAP protocols, conforming to TS 102 539 [13], clause 4.

J.2 Integration of non SIP AS service discovery function based on OMA BCAST ESG

J.2.1 User Equipment (UE)

J.2.1.1 Procedure for service attachment

It is assumed that each service provider publishes a single ESG. Thus, an ESG provider is equal to a service provider. For discovering the available service providers the list of SDFs, the UE can follow the ESG bootstrapping method as defined in OMA-TS-BCAST_DVB_Adaptation-V1_0 [7], clause 6.3.5 or other signalling methods. It is assumed that there is an ESG bootstrap session where service guides are described with ESGProviderDiscovery Descriptors, as specified in clause 9 of TS 102 471 [4]. This also applies to describing OMA BCAST service guides [6]. In the push situation, the ESG bootstrap session will be a FLUTE session as specified in TS 102 471 [4]. In the pull situation, the bootstrap session uses HTTP.

NOTE: It is also possible that the UE holds a hard-coded parameter containing the entry point information, or that an out-of-band mechanism exists for the UE to retrieve this information.

J.2.1.2 Procedure for service selection

J.2.1.2.1 Request of ESG provider discovery information

The UE uses the FLUTE protocol in order to retrieve the ESGProviderDiscovery Descriptor information, conforming to TS 102 471 [4], clause 9.2 and OMA-TS-BCAST_DVB_Adaptation-V1_0 [7], clause 6.3.5 or it uses the HTTP protocol.

J.2.1.2.2 Request of OMA BCAST ESG

The UE uses HTTP or FLUTE protocols in order to retrieve the ESG information, conforming to TS 102 471 [4], clause 8.1, OMA-TS-BCAST_DVB_Adaptation-V1_0 [7], clause 6.3.5 and OMA-TS-BCAST_Service_Guide-V1 [6], clause 5.4.

J.2.2 Service Discovery Function (SDF)

J.2.2.1 Procedure for service attachment

The SDF will provide to the UE the service provider discovery information in the form of ESGProviderDiscovery Descriptors, conforming to TS 102 471 [4], clause 9.1.1.

For providing the UE with this information, the SDF will use HTTP and FLUTE protocols, conforming to TS 102 471 [4], clause 9.2, OMA-TS-BCAST_DVB_Adaptation-V1_0 [7], clause 6.3.5 and OMA-TS-BCAST_Service_Guide-V1 [6], clause 5.4.

Koninklijke KPN NV - Exhibit 2010
Samsung Electronics America, Inc. et al. v. Koninklijke KPN NV PTAB-IPR2025-00502
Page 179 of 237

J.2.3 Service Selection Function (SSF)

J.2.3.1 Procedure for service selection

J.2.3.1.1 Delivery of ESG provider discovery information

The SSF will provide to the UE the ESGProviderDiscovery Descriptor conforming to TS 102 471 [4], clause 9.1.1. The SSF use thes FLUTE protocol, conforming to TS 102 471 [4], clause 9.2 and OMA-TS-BCAST_DVB_Adaptation-V1_0 [7], clause 6.3.5. or it uses the HTTP protocol.

J.2.3.1.2 Delivery of OMA BCAST ESG

The SSF will provide to the UE the ESG information conforming to OMA-TS-BCAST_Service_Guide-V1_, clause 5.4.

The SSF will use HTTP or FLUTE protocols, conforming to TS 102 471 [4], clause 8.1, OMA-TS-BCAST_DVB_Adaptation-V1_0 [7], clause 6.3.5 and OMA-TS-BCAST_Service_Guide-V1 [6], clause 5.4.

Koninklijke KPN NV - Exhibit 2010
Samsung Electronics America, Inc. et al. v. Koninklijke KPN NV PTAB-IPR2025-00502
Page 180 of 237

Annex K (normative): XML Schemas for the IPTV service action data

This annex specifies XML schemas for creating documents representing instances of the IPTV service action data.

XML Schema for BC service related data:

```
<?xml version="1.0" encoding="UTF-8"?>
<xs:schema targetNamespace="urn:org:etsi:ngn:params:xml:ns:iptvbcserviceactiondata"
xmlns="urn:org:etsi:ngn:params:xml:ns:iptvbcserviceactiondata"
xmlns:xs="http://www.w3.org/2001/XMLSchema" elementFormDefault="qualified"
attributeFormDefault="unqualified">
    <xs:element name="IPTVBcActionData">
        <xs:complexType>
                <xs:sequence>
                     <xs:element name="BCBookmark" type="tBCBookmark" minOccurs="0"
                maxOccurs="unbounded"/>
                </xs:sequence>
        </xs:complexType>
    </xs:element>
    <xs:complexType name="tBCBookmark">
                <xs:sequence>
                     <xs:element name="BCServiceId" type="xs:string" />
                     <xs:element name="ProgrammeId" type="xs:string" minOccurs="0"/>
                     <xs:element name="Bookmark" type="xs:dateTime" />
                     <xs:element name="BookmarkExpiryTime" type="xs:dateTime" minOccurs="0"/>
                     <xs:any namespace="##other" processContents="lax" minOccurs="0"
                maxOccurs="unbounded"/>
                </xs:sequence>
    </xs:complexType>
    <xs:complexType name="tExtension">
                <xs:sequence>
                     <xs:any processContents="lax" minOccurs="0" maxOccurs="unbounded"/>
                </xs:sequence>
    </xs:complexType>
</xs:schema>
```

XML Schema for CoD service related data:

```
<?xml version="1.0" encoding="UTF-8"?>
<xs:schema targetNamespace="urn:org:etsi:ngn:params:xml:ns:iptvcodserviceactiondata"
xmlns="urn:org:etsi:ngn:params:xml:ns:iptvcodserviceactiondata"
xmlns:xs="http://www.w3.org/2001/XMLSchema" elementFormDefault="qualified"
attributeFormDefault="unqualified">
    <xs:element name="IPTVCodActionData">
        <xs:complexType>
            <xs:sequence>
                <xs:element name="AvailableCoD" type="tAvailableCoD" minOccurs="0"
maxOccurs="unbounded"/>
            </xs:sequence>
        </xs:complexType>
    </xs:element>
    <xs:complexType name="tAvailableCoD">
        <xs:sequence>
            <xs:element name="CoDId" type="xs:string"/>
            <xs:element name="CoDDeliveryStatus" type="tCodDeliveryStatus"/>
            <xs:element name="expectedDuration" type="xs:string"/>
            <xs:element name="CoDOffset" type="xs:string" minOccurs="0"/>
            <xs:element name="CoDOffsetExpiryTime" type="xs:dateTime" minOccurs="0"/>
            <xs:element name="Extension" type="tExtension" minOccurs="0"/>
            <xs:any namespace="##other" processContents="lax" minOccurs="0" maxOccurs="unbounded"/>
        </xs:sequence>
    </xs:complexType>
    <xs:simpleType name="tCodDeliveryStatus" final="list">
        <xs:restriction base="xs:unsignedByte">
            <xs:minInclusive value="0"/>
            <xs:maxInclusive value="4"/>
            <xs:enumeration value="0">
                <xs:annotation>
                    <xs:documentation>
                        <label xml:lang="en">Ordered</label>
                        <definition xml:lang="en">Content has been ordered</definition>
```


Koninklijke KPN NV - Exhibit 2010
Samsung Electronics America, Inc. et al. v. Koninklijke KPN NV PTAB-IPR2025-00502
Page 181 of 237

```
                    </xs:documentation>
                </xs:annotation>
            </xs:enumeration>
            <xs:enumeration value="1">
                <xs:annotation>
                    <xs:documentation>
                        <label xml:lang="en">Ongoing</label>
                        <definition xml:lang="en">Streaming delivery has started</definition>
                    </xs:documentation>
                </xs:annotation>
            </xs:enumeration>
            <xs:enumeration value="2">
                <xs:annotation>
                    <xs:documentation>
                        <label xml:lang="en">Failed</label>
                        <definition xml:lang="en">Some error has occurred while delivering the
content</definition>
                    </xs:documentation>
                </xs:annotation>
            </xs:enumeration>
            <xs:enumeration value="3">
                <xs:annotation>
                    <xs:documentation>
                        <label xml:lang="en">Parked</label>
                        <definition xml:lang="en">The content was parked and will be pickep up
later</definition>
                    </xs:documentation>
                </xs:annotation>
            </xs:enumeration>
            <xs:enumeration value="4">
                <xs:annotation>
                    <xs:documentation>
                        <label xml:lang="en">Paused</label>
                        <definition xml:lang="en">The content is paused for some amount of
time</definition>
                    </xs:documentation>
                </xs:annotation>
            </xs:enumeration>
        </xs:restriction>
    </xs:simpleType>
    <xs:complexType name="tExtension">
        <xs:sequence>
            <xs:any processContents="lax" minOccurs="0" maxOccurs="unbounded"/>
        </xs:sequence>
    </xs:complexType>
</xs:schema>
```

XML Schema for N-PVR service related data:

```
<?xml version="1.0" encoding="UTF-8"?>
<xs:schema targetNamespace="urn:org:etsi:ngn:params:xml:ns:iptvnpvrserviceactiondata"
xmlns="urn:org:etsi:ngn:params:xml:ns:iptvnpvrserviceactiondata"
xmlns:xs="http://www.w3.org/2001/XMLSchema" elementFormDefault="qualified"
attributeFormDefault="unqualified">
    <xs:element name="IPTVNpvrActionData">
        <xs:complexType>
            <xs:sequence>
                <xs:element name="NPVRItem" type="tNPVRItem" minOccurs="0" maxOccurs="unbounded"/>
            </xs:sequence>
        </xs:complexType>
    </xs:element>
    <xs:complexType name="tNPVRItem">
        <xs:sequence>
            <xs:element name="NPVRContentId" type="xs:string" minOccurs="0"/>
            <xs:element name="BCServiceId" type="xs:string" />
            <xs:element name="RecordStartDate" type="xs:string" minOccurs="0"/>
            <xs:element name="RecordEndDate" type="xs:dateTime" minOccurs="0"/>
            <xs:element name="RecordStatus" type="tRecordStatus" minOccurs="0"/>
            <xs:element name="PlaybackOffset" type="xs:string" minOccurs="0"/>
            <xs:element name="PlaybackOffsetExpiryTime" type="xs:dateTime" minOccurs="0"/>
            <xs:element name="NPVRContentExpiryTime" type="xs:dateTime" minOccurs="0"/>
            <xs:element name="Extension" type="tExtension" minOccurs="0"/>
            <xs:any namespace="##other" processContents="lax" minOccurs="0" maxOccurs="unbounded"/>
        </xs:sequence>
    </xs:complexType>
    <xs:simpleType name="tRecordStatus">
        <xs:restriction base="xs:unsignedByte">
```


Koninklijke KPN NV - Exhibit 2010
Samsung Electronics America, Inc. et al. v. Koninklijke KPN NV PTAB-IPR2025-00502
Page 182 of 237

```
            <xs:minInclusive value="0"/>
            <xs:maxInclusive value="3"/>
            <xs:enumeration value="0">
                <xs:annotation>
                    <xs:documentation>
                        <label xml:lang="en">Scheduled</label>
                        <definition xml:lang="en">Recording is scheduled</definition>
                    </xs:documentation>
                </xs:annotation>
            </xs:enumeration>
            <xs:enumeration value="1">
                <xs:annotation>
                    <xs:documentation>
                        <label xml:lang="en">Started</label>
                        <definition xml:lang="en">Recording has started</definition>
                    </xs:documentation>
                </xs:annotation>
            </xs:enumeration>
            <xs:enumeration value="2">
                <xs:annotation>
                    <xs:documentation>
                        <label xml:lang="en">Available</label>
                        <definition xml:lang="en">Recording is available</definition>
                    </xs:documentation>
                </xs:annotation>
            </xs:enumeration>
            <xs:enumeration value="3">
                <xs:annotation>
                    <xs:documentation>
                        <label xml:lang="en">Failed</label>
                        <definition xml:lang="en">Recording has failed</definition>
                    </xs:documentation>
                </xs:annotation>
            </xs:enumeration>
        </xs:restriction>
    </xs:simpleType>
    <xs:complexType name="tExtension">
        <xs:sequence>
            <xs:any processContents="lax" minOccurs="0" maxOccurs="unbounded"/>
        </xs:sequence>
    </xs:complexType>
</xs:schema>
```

XML Schema for CPVR service related data:

```
<?xml version="1.0" encoding="UTF-8"?>
<xs:schema targetNamespace="urn:org:etsi:ngn:params:xml:ns:iptvcpvrserviceactiondata"
xmlns="urn:org:etsi:ngn:params:xml:ns:iptvcpvrserviceactiondata"
xmlns:xs="http://www.w3.org/2001/XMLSchema" elementFormDefault="qualified"
attributeFormDefault="unqualified">

    <xs:element name="IPTVCpvrActionData">
        <xs:complexType>
            <xs:sequence>
                <xs:element name="CPVRItem" type="tCPVRItem" minOccurs="0" maxOccurs="unbounded"/>
            </xs:sequence>
        </xs:complexType>
    </xs:element>


    <xs:complexType name="tCPVRItem">
        <xs:sequence>
            <xs:element name="CPVRContentId" type="xs:string" minOccurs="0"/>
            <xs:element name="BCServiceId" type="xs:string" />
            <xs:element name="TargetUEId" type="xs:string" />
            <xs:element name="RecordStartDate" type="xs:string" minOccurs="0"/>
            <xs:element name="RecordEndDate" type="xs:dateTime" minOccurs="0"/>
            <xs:element name="RecordStatus" type="tRecordStatus" minOccurs="0"/>
            <xs:element name="Extension" type="tExtension" minOccurs="0"/>
            <xs:any namespace="##other" processContents="lax" minOccurs="0" maxOccurs="unbounded"/>
        </xs:sequence>
    </xs:complexType>
    <xs:simpleType name="tRecordStatus">
        <xs:restriction base="xs:unsignedByte">
            <xs:minInclusive value="0"/>
            <xs:maxInclusive value="3"/>
            <xs:enumeration value="0">
```


Koninklijke KPN NV - Exhibit 2010
Samsung Electronics America, Inc. et al. v. Koninklijke KPN NV PTAB-IPR2025-00502
Page 183 of 237

```
                <xs:annotation>
                    <xs:documentation>
                        <label xml:lang="en">Scheduled</label>
                        <definition xml:lang="en">Recording is scheduled</definition>
                    </xs:documentation>
                </xs:annotation>
            </xs:enumeration>
            <xs:enumeration value="1">
                <xs:annotation>
                    <xs:documentation>
                        <label xml:lang="en">Started</label>
                        <definition xml:lang="en">Recording has started</definition>
                    </xs:documentation>
                </xs:annotation>
            </xs:enumeration>
            <xs:enumeration value="2">
                <xs:annotation>
                    <xs:documentation>
                        <label xml:lang="en">Available</label>
                        <definition xml:lang="en">Recording is available</definition>
                    </xs:documentation>
                </xs:annotation>
            </xs:enumeration>
            <xs:enumeration value="3">
                <xs:annotation>
                    <xs:documentation>
                        <label xml:lang="en">Failed</label>
                        <definition xml:lang="en">Recording has failed</definition>
                    </xs:documentation>
                </xs:annotation>
            </xs:enumeration>
        </xs:restriction>
    </xs:simpleType>
    <xs:complexType name="tExtension">
        <xs:sequence>
            <xs:any processContents="lax" minOccurs="0" maxOccurs="unbounded"/>
        </xs:sequence>
    </xs:complexType>
</xs:schema>
```

XML Schema for UGC service related data:

```
<?xml version="1.0" encoding="UTF-8"?>
<xs:schema targetNamespace="urn:org:etsi:ngn:params:xml:ns:iptvugcserviceactiondata"
xmlns="urn:org:etsi:ngn:params:xml:ns:iptvugcserviceactiondata"
xmlns:xs="http://www.w3.org/2001/XMLSchema" elementFormDefault="qualified"
attributeFormDefault="unqualified">
    <xs:element name="IPTVUGCActionData">
        <xs:complexType>
            <xs:sequence>
                <xs:element name="UGCItem" type="tUGCItem" minOccurs="0" maxOccurs="unbounded"/>
            </xs:sequence>
            <xs:attribute name="message-id" type="xs:string" />
        </xs:complexType>
    </xs:element>
    <xs:complexType name="tUGCItem">
        <xs:sequence>
            <xs:element name="UGCContentId" type="xs:string" minOccurs="0"/>
            <xs:element name="UGCCreationTime" type="xs:dateTime" minOccurs="0"/>
            <xs:element name="UGCGenre" type="xs:string" minOccurs="0"/>
            <xs:element name="UGCTitle" type="xs:string" minOccurs="0"/>
            <xs:element name="UGCOriginator" type="xs:string" minOccurs="0"/>
            <xs:element name="UGCDescription" type="xs:string" minOccurs="0"/>
            <xs:element name="UGCAuthorizedViewUser" type="xs:string" minOccurs="0"/>
            <xs:element name="Extension" type="tExtension" minOccurs="0"/>
            <xs:any namespace="##other" processContents="lax" minOccurs="0" maxOccurs="unbounded"/>
        </xs:sequence>
    </xs:complexType>
    <xs:complexType name="tExtension">
        <xs:sequence>
            <xs:any processContents="lax" minOccurs="0" maxOccurs="unbounded"/>
        </xs:sequence>
    </xs:complexType>
</xs:schema>
```


Koninklijke KPN NV - Exhibit 2010
Samsung Electronics America, Inc. et al. v. Koninklijke KPN NV PTAB-IPR2025-00502
Page 184 of 237

XML Schema for Content Insertion service related data:

```
<?xml version="1.0" encoding="UTF-8"?>
<xs:schema targetNamespace="urn:org:etsi:ngn:params:xml:ns:iptvcontentinsertionserviceactiondata"
xmlns="urn:org:etsi:ngn:params:xml:ns:iptvcontentinsertionserviceactiondata"
xmlns:xs="http://www.w3.org/2001/XMLSchema" elementFormDefault="qualified"
attributeFormDefault="unqualified">
    <xs:element name="IPTVContentInsertionActionData">
        <xs:complexType>
            <xs:sequence>
                <xs:element name="InsertionData" type="tInsertionData" minOccurs="0"
maxOccurs="unbounded"/>
            </xs:sequence>
        </xs:complexType>
    </xs:element>
    <xs:complexType name="tInsertionData">
        <xs:sequence>
            <xs:element name="IPTVContentIdentifier" type="xs:string"/>
            <xs:element name="InsertedContentIdentifier" type="xs:string" />
            <xs:element name="InsertionTime" type="xs:dateTime" minOccurs="0"/>
            <xs:element name="InsertionStatus" type="tInsertionStatus"/>
            <xs:element name="Extension" type="tExtension" minOccurs="0"/>
            <xs:any namespace="##other" processContents="lax" minOccurs="0" maxOccurs="unbounded"/>
        </xs:sequence>
    </xs:complexType>
    <xs:simpleType name="tInsertionStatus">
        <xs:restriction base="xs:string">
            <xs:enumeration value="Accepted">
                <xs:annotation>
                    <xs:documentation>
                        <definition xml:lang="en">Insertion is accepted</definition>
                    </xs:documentation>
                </xs:annotation>
            </xs:enumeration>
            <xs:enumeration value="Rejected">
                <xs:annotation>
                    <xs:documentation>
                        <definition xml:lang="en">Insertion is rejected</definition>
                    </xs:documentation>
                </xs:annotation>
            </xs:enumeration>
            <xs:enumeration value="Started">
                <xs:annotation>
                    <xs:documentation>
                        <definition xml:lang="en">Insertion has started</definition>
                    </xs:documentation>
                </xs:annotation>
            </xs:enumeration>
            <xs:enumeration value="Finished">
                <xs:annotation>
                    <xs:documentation>
                        <definition xml:lang="en">Insertion is finished</definition>
                    </xs:documentation>
                </xs:annotation>
            </xs:enumeration>
            <xs:enumeration value="Failed">
                <xs:annotation>
                    <xs:documentation>
                        <definition xml:lang="en">Insertion has failed</definition>
                    </xs:documentation>
                </xs:annotation>
            </xs:enumeration>
        </xs:restriction>
    </xs:simpleType>
    <xs:complexType name="tExtension">
        <xs:sequence>
            <xs:any processContents="lax" minOccurs="0" maxOccurs="unbounded"/>
        </xs:sequence>
    </xs:complexType>
</xs:schema>
```

XML Schema for PCh service related data:

```
<?xml version="1.0" encoding="UTF-8"?>
<xs:schema targetNamespace="urn:org:etsi:ngn:params:xml:ns:iptvpchserviceactiondata"
xmlns="urn:org:etsi:ngn:params:xml:ns:iptvpchserviceactiondata"
```


Koninklijke KPN NV - Exhibit 2010
Samsung Electronics America, Inc. et al. v. Koninklijke KPN NV PTAB-IPR2025-00502
Page 185 of 237

```
xmlns:xs="http://www.w3.org/2001/XMLSchema" elementFormDefault="qualified"
attributeFormDefault="unqualified">
    <xs:element name="IPTVPChActionData">
        <xs:complexType>
            <xs:sequence>
                <xs:element name="PChList" type="tPChList" minOccurs="0" maxOccurs="unbounded"/>
            </xs:sequence>
            <xs:attribute name="transaction-id" type="xs:string" use="optional"/>
        </xs:complexType>
    </xs:element>

    <xs:complexType name="tPChList">
        <xs:sequence>
            <xs:element name="PChItem" minOccurs="1" maxOccurs="unbounded">
                <xs:complexType>
                    <xs:sequence>
                        <xs:element name="PChItemServiceType" type="xs:string" />
                        <xs:element name="PChItemContentId" type="xs:anyURI" />
                        <xs:element name="PChItemStartTime" type="xs:dateTime" />
                        <xs:element name="PChItemEndTime" type="xs:dateTime" />
                        <xs:element name="PChItemOffset" type="xs:duration" />
                    </xs:sequence>
                </xs:complexType>
            </xs:element>
        </xs:sequence>
        <xs:attribute name="PChId" type="xs:anyURI" use="required"/>
    </xs:complexType>
</xs:schema>
```


Koninklijke KPN NV - Exhibit 2010
Samsung Electronics America, Inc. et al. v. Koninklijke KPN NV PTAB-IPR2025-00502
Page 186 of 237

Annex L (normative): Mapping of IPTV parameters to service selection

L.1 Mapping of service attachment

This clause presents how several IPTV technologies are mapped into TISPAN metadata (XML schema as specified in annex M) concerning the discovery of SSF entities. In the current release DVB and OMABCAST technologies mapping are described.

Within the XML schema, some fields are specific to TISPAN, they are marked as "*TISPAN defined field*" in the following tables.

L.1.1 Mapping of DVB SD&S SP discovery records to XML Schema for Service Attachment

This clause describes the mapping of DVB SD&S Service Provider discovery record to the generic XML schema for service attachment defined in annex M and clause 5.2.2.3.

TISPAN Element Name (copied from clause 5.2.2.3)	**Corresponding DVB SD&S element in TS 102 034 [3], clause 5.2.5 table 2 (TS 102 034 [3] XML Schema clause reference)**
SSF	
@ID	*TISPAN defined field*
@Technology	when a DVB SSF is advertised, this field must be "dvb.org_iptv"
@Version	*TISPAN defined field*
Description	*TISPAN defined field*
ServiceProvider	ServiceProvider *(C.1.4.6)*
@DomainName	ServiceProvider@DomainName *(C.1.4.6)*
@LogoURI	ServiceProvider@LogoURI *(C.1.4.6)*
Name	ServiceProvider.Name *(C.1.4.6)*
Description	ServiceProvider.Description *(C.1.4.6)*
Pull	OfferingListType.Pull *(C.1.3.15)*
@Location	Pull@Location *(C.1.3.15)*
DataType	PayloadId There is a direct mapping between the DVB PayloadId values and this field. *(C.1.3.19)*
@Type	PayloadId@Id refer to table 1 in TS 102 034 [3] and to table 2 in TS 102 539 [13] TS 102 034 [3] defines the values 0x00 to 0x06, TS 102 539 [13] defines the values 0xA1 to 0xA7. The present specification defines an additional value 0xA0: when using 0xA0, it means that the Pull@Location URL refers to an SSF that is a DVB-BCG server using the SOAP protocol, instead of the pull HTTP delivery. When 0xA0 is used, no Segment element shall be exposed. *(C.1.3.19)*
Segment	PayloadId.Segment *(C.1.3.19)* This parameter is mandatory for DVB Pull mode
@ID	PayloadId.Segment@Id *(C.1.3.19)*

Koninklijke KPN NV - Exhibit 2010
Samsung Electronics America, Inc. et al. v. Koninklijke KPN NV PTAB-IPR2025-00502
Page 187 of 237

TISPAN Element Name (copied from clause 5.2.2.3)	Corresponding DVB SD&S element in TS 102 034 [3], clause 5.2.5 table 2 (TS 102 034 [3] XML Schema clause reference)
@Version	PayloadId.Segment@Version *(C.1.3.19)*
Push	OfferingListType.Push *(C.1.3.15, C.1.3.4)*
@IPVersion	
@MulticastAddress	@Address *(C.1.3.11)*
@MulticastPort	@Port *(C.1.3.11)*
@SourceAddress	@Source *(C.1.3.11)*
DataType	PayloadId (refer to table 1 in TS 102 034 [3] and to table 2 in TS 102 539 [13]) *(C.1.3.19)*
@Type	PayloadId@Id There is a direct mapping between the DVB PayloadId values and this field *(C.1.3.19)*
Segment	PayloadId.Segment *(C.1.3.19)* This parameter is optional for DVB Push mode
@ID	PayloadId.Segment@Id *(C.1.3.19)*
@Version	**PayloadId.Segment@Version** *(C.1.3.19)*

L.1.2 Mapping of OMA BCAST ESG delivery descriptors to XML schema for service attachment

This clause describes the mapping of OMA BCAST ESG delivery descriptors to the generic XML schema for service attachment defined in annex M and clause 5.2.2.3. The mandatory/optional nature of the fields can be derived from there.

TISPAN Element Name (copied from clause 5.2.2.3)	Corresponding OMA BCAST ESG element in OMA-TS-BCAST_Service_Guide-V1_0 [6], clause 5.4 and TS 102 471 [4], clause 9.1
SSF	
@ID	*TISPAN defined field*
@Technology	When an OMA BCAST SSF is advertised, this field must be "openmobilealliance.org_bcast"
@Version	*TISPAN defined field*
Description	*TISPAN defined field*
ServiceProvider	
@DomainName	ProviderURI (TS 102 471 [4], *clause 9.1.1*)
@LogoURI	ProviderLogo (*[REF7], clause 9.1.1*)
Name	ProviderName (TS 102 471 [4], *clause 9.1.1*)
Description	
Pull	
@Location	This URI encodes the location of the Service Guide Delivery Descriptors and/or the Service Guide Delivery Units ([6], *clause 5.4*)
DataType	Specifies the type of Service Guide data fragment. ([6], *clause 5.4*)

Koninklijke KPN NV - Exhibit 2010
Samsung Electronics America, Inc. et al. v. Koninklijke KPN NV PTAB-IPR2025-00502
Page 188 of 237

TISPAN Element Name (copied from clause 5.2.2.3)	Corresponding OMA BCAST ESG element in OMA-TS-BCAST_Service_Guide-V1_0 [6], clause 5.4 and TS 102 471 [4], clause 9.1
@Type	Options are "sgdd", "sgdu" and "sgdd+sgdu". The value is used to populate the body of the HTTP request ([6], *clause 5.4.3.1*)
Segment	Service Guide Delivery Descriptor or Service Guide fragment. ([6], *clause 5.4.1*) This parameter is mandatory for OMABCAST Pull mode
@ID	Service Guide Delivery Descriptor or Service Guide fragment identifier. Can be mapped to "id", "fragmentID" or "fragmentTransportID". Format is anyURI ([6], *clause 5.4.1.1*)
@Version	Version of the Service Guide Delivery Descriptor or Service Guide fragment identifier. Can be mapped to "version" or "fragmentVersion". Format is unsignedInt ([6], *clauses 5.4.1.3 and 5.4.1.5.2*)
Push	
@IPVersion	IPVersion6, format is bit string. This is a binary flag, which, if set to "1", indicates IPv6 usage (TS 102 471 [4], *clause 9.1.2*)
@MulticastAddress	Specifies the IP address of the FLUTE session transporting the ESG (TS 102 471 [4], *clause 9.1.2*)
@MulticastPort	Specifies the port number of the IP stream of the FLUTE session transporting the ESG (TS 102 471 [4], *clause 9.1.2*)
@SourceAddress	Specifies the source IP address of the FLUTE session transporting the ESG (TS 102 471 [4], *clause 9.1.2*)
DataType	Specifies the type of Service Guide data fragment (TS 102 471 [4], *clause 5.4*)
@Type	Options are "application/vnd.oma.bcast.sgdd+xml" and "application/vnd.oma.bcast.sgdu" ([6], *clause 5.4.2*)
Segment	Service Guide Delivery Descriptor or Service Guide fragment (TS 102 471 [4], *clause 5.4.1*) This parameter is mandatory for OMABCAST Push mode
@ID	Service Guide Delivery Descriptor or Service Guide fragment identifier. Can be mapped to "id", "fragmentID" or "fragmentTransportID". Format is anyURI ([6], *clause 5.4.1.1*)
@Version	Version of the Service Guide Delivery Descriptor or Service Guide fragment identifier. Can be mapped to "version" or "fragmentVersion". Format is unsignedInt ([6], *clauses 5.4.1.3 and 5.4.1.5.2*)

L.1.3 Mapping of service action data record discovery records to XML schema for service attachment

This clause describes the mapping of **Service Action Data** record to the generic XML schema for service attachment defined in annex M and clause 5.2.2.3.

Koninklijke KPN NV - Exhibit 2010
Samsung Electronics America, Inc. et al. v. Koninklijke KPN NV PTAB-IPR2025-00502
Page 189 of 237

TISPAN Element Name (copied from clause 5.2.2.3)	Corresponding Service Action Data field
SSF	
@ID	TISPAN defined field
@Technology	when a Service Action Data record is advertised, this field must be "tispan.org_sad"
@Version	TISPAN defined field
Description	TISPAN defined field
ServiceProvider	Service Provider information
@DomainName	An internet DNS domain name registered by the Service Provider that uniquely identifies the Service Provider
@LogoURI	Pointer to a Service Provider logo for potential display
Name	Name of the Service Provider for display in one or more languages; one Service Provider name is allowed per language code, and at least one language shall be provided
Description	Description of the Service Provider for potential display in one or more languages; one description is allowed per language code
Pull	
@Location	Location of the Service Action data Record
DataType	Type of Service Action Data (BC bookmark, N-PVR, CoD)
@Type	0x00 defines All service action data 0x01 defines BC service action data 0x02 defines CoD service action data 0x03 defines N-PVR service action data
Segment	Not applicable
@ID	Not applicable
@Version	Not applicable
Push	Not applicable
@IPVersion	
@MulticastAddress	Not applicable
@MulticastPort	Not applicable
@SourceAddress	Not applicable
DataType	Not applicable
@Type	Not applicable
Segment	Not applicable
@ID	Not applicable
@Version	Not applicable

L.2 Mapping of BC service

L.2.1 Mapping of BC service for DVB technology

Table L.1: Mapping of SIP parameters for BC service

IPTV SIP parameters	DVB
Request-URI	Not retrieved from SSF

Koninklijke KPN NV - Exhibit 2010
Samsung Electronics America, Inc. et al. v. Koninklijke KPN NV PTAB-IPR2025-00502
Page 190 of 237

Table L.2: Mapping of SDP parameters for BC service

IPTV SDP parameters for each media stream	Corresponding DVB SD&S element in TS 102 034 [3], clause 5.2.6.2 tables 4, 5 and 8 *(TS 102 034 [3] XML Schema clause reference)*
BC content stream	
Connection Data c=<network type> <address type> <connection address>	
<network type>	Not retrieved from SSF
<address type>	Not retrieved form SSF
<connection address>	IPMulticastAddress@Address *(C.1.3.10, C.1.3.11)*
Media Announcements for content delivery m=<media> <port> <transport> <fmt list>	
<media>	"video", not retrieved from SSF
<port>	IPMulticastAddress@Port *(C.1.3.10, C.1.3.11)*
<transport>	"RTP/AVP" if IPMulticastAddress@Streaming="rtp" or if IPMulticastAddress@Streaming is not present "UDP/H2221/MP2T" or "UDP/RAW/RAW" if IPMulticastAddress@Streaming="udp" *(C.1.3.10, C.1.3.11)*
<fmt>	"33", not retrieved from SSF
Bandwidth b=AS:<bandwidth>	MaxBitrate *(C.1.3.8)*
BCServiceId	TextualIdentifier@ServiceName ":"TextualIdentifier@DomainName *(C.1.3.24)* Note that the TextualIdentifier@DomainName is an optional attribute; therefore if it's not present, the field is copied from the *OfferingBase@DomainName* (C.1.3.14)
BCPackageId	Package@Id *(C.1.3.16)*
FEC stream Note that the multicast address and source address of the FEC stream can be the same as the BC content stream	
Media Announcements for FEC delivery m=<media> <port> <transport> <fmt list>	see note
<media>	"application", not retrieved from SSF
<port>	IPMulticastAddress.FECBaseLayer@Port *(C.1.3.10, C.1.3.6)*
<transport>	RTP/AVP
<fmt>	Dynamic payload type
a=rtpmap:<fmt> <encoding_name/clock_rate>	<encoding_name/clock_rate> referring to the DVB-IP AL-FEC Base layer and is equal to: "vnd.dvb.iptv.alfec-base/90000"
Connection Data at media level c=<network type> <address type> <connection address>	
<network type>	Not retrieved from SSF
<address type>	Not retrieved from SSF
<connection address>	IPMulticastAddress.FECBaseLayer@Address (C.1.3.10, C.1.3.6)
NOTE: The FEC delivery can only be associated to a RTP delivered content.	

Koninklijke KPN NV - Exhibit 2010
Samsung Electronics America, Inc. et al. v. Koninklijke KPN NV PTAB-IPR2025-00502
Page 191 of 237

Table L.3: Mapping of IGMP parameters for BC service

IPTV IGMP parameters	Corresponding DVB SD&S element in TS 102 034 [3], clause 5.2.6.2, tables 4 and 5 *(TS 102 034 [3] XML Schema clause reference)*
BC content stream	
<Multicast Address>	IPMulticastAddress@Address *(C.1.3.10, C.1.3.11)*
<Source Address>	IPMulticastAddress@Source *(C.1.3.10, C.1.3.11)*
FEC stream Note that the multicast address and source address of the FEC stream can be the same as the Live content stream	
<Multicast Address>	If the FEC multicast address is not the same as the live stream address: IPMulticastAddress.FECBaseLayer@Address *(C.1.3.10, C.1.3.6)*
<Source Address>	If the source address is not the same as the live stream: IPMulticastAddress.FECBaseLayer@Source *(C.1.3.10, C.1.3.6)*

L.2.2 Mapping of BC service for OMA BCAST technology

Clause L.2.2 describes the mapping of OMA BCAST ESG delivery descriptors to the TISPAN XML schema for service attachment. This mapping procedure allows for retrieving OMA BCAST ESG fragments from an SSF. The various types of ESG fragments and the relation between them is described in clause 5.1.1 of OMA-TS-BCAST_ServiceGuide-V1_0 [6]" and shown in figure 1 of that clause. An ESG has separate fragments to describe the service (e.g. TV channel) and to describe the access to that service. From a Service fragment (clause 5.1.2.1 in [6]) a unique identifier can be obtained to map to the BCServiceID. The Access fragment can either contain or refer to an Session Description, which can take the form of an SDP. Thus, from an OMA BCAST SSF a UE can obtain TV channel identification, description and access information, where the latter is in the form of an SDP.

Table L.4: Mapping of SIP parameters for BC service

IPTV SIP parameters	OMA BCAST
Request-URI	Not retrieved from SSF

Table L.5: Mapping of SDP parameters for BC service

IPTV SDP parameters for each media stream	Corresponding OMA BCAST element in OMA-TS-BCAST_ServiceGuide-V1_0 [6]
Connection Data c=<network type> <address type> <connection address>	
<network type>	SDP
<address type>	SDP
<connection address>	SDP
Media Announcements for content delivery m=<media> <port> <transport> <fmt list>	
<media>	SDP
<port>	SDP
<transport>	SDP
<fmt list>	SDP
Bandwidth b=AS:<bandwidth>	SDP
BCServiceId	globalServiceID
BCPackageId	globalPurchaseItemID

Koninklijke KPN NV - Exhibit 2010
Samsung Electronics America, Inc. et al. v. Koninklijke KPN NV PTAB-IPR2025-00502
Page 192 of 237

Table L.6: Mapping of IGMP parameters for BC service

IPTV IGMP parameters	OMA BCAST
<Multicast Address>	SDP
<Source Address>	SDP

L.2.2A Mapping of BC service for TV-Anytime Phase 2 technology

Clause L.2.2A describes the mapping of TV-Anytime Phase 2 elements to the TISPAN XML schema for service attachment. This mapping procedure allows for using TV-Anytime Phase 2 information in TISPAN IMS based IPTV procedures.

Table L.7A: Mapping of SDP parameters for BC service

IPTV SDP parameters for each media stream	Corresponding TV-Anytime Phase 2 element in ETSI TS 102 822-3-1 [333333], ETSI TS 102 822-4 [35],], ETSI TS 102 822-3-3[57]
Connection Data c=<network type> <address type> <connection address>	
<network type>	ContentReferencingTable @ Result@ LocationsResult@ Locator
<address type>	ContentReferencingTable @ Result@ LocationsResult@ Locator
<connection address>	ContentReferencingTable @ Result@ LocationsResult@ Locator
Media Announcements for content delivery m=<media> <port> <transport> <fmt list>	
<media>	ProgramInformationTable@ProgramInformation@AVAttributes
<port>	ContentReferencingTable @ Result@ LocationsResult@ Locator
<transport>	ContentReferencingTable @ Result@ LocationsResult@ Locator
<fmt list>	ProgramInformationTable@ProgramInformation@AVAttributes
Bandwidth b=AS:<bandwidth>	ProgramInformationTable@ProgramInformation@AVAttributes@Bitrate
BCProgramId	ProgramInformationTable@ProgramInformation@programId
BCServiceId	ServiceInformationTable@ServiceInformation@serviceId
BCPackageId	PackageTable@Package@crid

Formatted: Font:

Table L.7B: Mapping of IGMP parameters for BC service

IPTV IGMP parameters	TV-Anytime Phase 2
<Multicast Address>	SDP
<Source Address>	SDP

L.2.3 Use of the TV URI in the mapping of BC service for DVB technology and OMA BCAST technology

TS 184 009 [16] specifies the TV URI as globally unique identifier to identify broadcast television channels. The TV URI is used in the mapping of BC service for DVB technology and OMA BCAST technology as follows.

L.2.3.1 DVB technology

If DVB technology (see clause L.2.1) is used, then the ServiceName attribute of the TextualIdentifier should be populated with the TV URI identifying the television channel.

Koninklijke KPN NV - Exhibit 2010
Samsung Electronics America, Inc. et al. v. Koninklijke KPN NV PTAB-IPR2025-00502
Page 193 of 237

L.2.3.2 OMA BCAST technology

If OMA-BCAST technology is used (see clause L.2.2), then the globalServiceID should be populated with the TV URI identifying the television channel.

L.2.3.3 TV-Anytime Phase 2 technology

If TV-Anytime Phase 2 technology is used (see clause L.2.2A), then the serviceId should be populated with the TV URI identifying the television channel.

L.3 Mapping of CoD service

L.3.1 Mapping of CoD service for DVB technology

Table L.7: Mapping of SIP parameters for CoD service - DVB technology

IPTV SIP parameters	DVB BCG
Request-URI	Locator defined in TS 102 822-4 [35], in sip-uri format
NOTE: the user part of the Request-URI is a free string format corresponding to a unique content instance for one service provider, e.g. sip: cod_content1_hd@service_provider1.com.	

Table L.8: Mapping of SDP parameters for CoD service - DVB technology

IPTV SDP parameters	DVB BCG
Connection Data at session level c=<network type> <address type> <connection address>	Not retrieved from SSF
<network type>	Not retrieved from SSF
<address type>	Not retrieved from SSF
<connection address>	Not retrieved from SSF
Media Announcements for content delivery m=<media> <port> <transport> <fmt list>	
<media>	"video" - Not retrieved from SSF
<port>	Client port- Not retrieved from SSF
<transport>	"RTP/AVP" or "UDP/H2221/MP2T" or "UDP/RAW/RAW depending on the transport layer used for the content, see clause 5.1.4.1
<fmt>	"33" - Not retrieved from SSF
Bandwidth	BitRatetype as defined in TS 102 822-3-1 [333333], clause 6.3.5
Media Announcements for FEC delivery m=<media> <port> <transport> <fmt list>	see note
<media>	"application", not retrieved from SSF
<port>	Client port, not retrieved from SSF
<transport>	RTP/AVP
<fmt>	Dynamic payload type
a=rtpmap:<fmt><encoding_name/clock_rate>	<encoding_name/clock_rate> referring to the DVB-IP AL-FEC Base layer and is equal to: "vnd.dvb.iptv.alfec-base/90000"
Connection Data at media level c=<network type> <address type> <connection address>	
<network type>	Not retrieved from SSF
<address type>	Not retrieved form SSF
<connection address>	Not retrieved from SSF
NOTE: The FEC delivery can only be associated to an RTP delivered content.	

Formatted: Font: Check spelling and grammar

Koninklijke KPN NV - Exhibit 2010
Samsung Electronics America, Inc. et al. v. Koninklijke KPN NV PTAB-IPR2025-00502
Page 194 of 237

L.3.2 Mapping of CoD service for OMA BCAST technology

Table L.9: Mapping of SIP Parameters for CoD Service

IPTV SIP parameters	OMA BCAST
Request-URI	-

Table L.10: Mapping of SDP Parameters for CoD Service

IPTV SDP parameters	OMA BCAST
Connection Data at session level c=<network type> <address type> <connection address>	
<network type>	N/A UE local data
<address type>	N/A UE local data
<connection address>	N/A UE local data
Media Announcements for content delivery m=<media> <port> <transport> <fmt list>	
<media>	FFS
<port>	N/A UE local data
<transport>	FFS
<fmt list>	

L.3.3 Mapping of CoD service for TV-Anytime Phase 2 technology

Table L.11: Mapping of SIP Parameters for CoD Service

IPTV SIP parameters	TV-Anytime Phase 2
Request-URI	-

Table L.12: Mapping of SDP Parameters for CoD Service

IPTV SDP parameters	Corresponding TV-Anytime Phase 2 element in ETSI TS 102 822-3-1 [333333], ETSI TS 102 822-4 [35]
Connection Data at session level c=<network type> <address type> <connection address>	
<network type>	ContentReferencingTable @ Result@ LocationsResult@ Locator
<address type>	ContentReferencingTable @ Result@ LocationsResult@ Locator
<connection address>	ContentReferencingTable @ Result@ LocationsResult@ Locator
Media Announcements for content delivery m=<media> <port> <transport> <fmt list>	
<media>	ProgramInformationTable@ProgramInformation@AVAttributes
<port>	N/A UE local data
<transport>	ContentReferencingTable @ Result@ LocationsResult@ Locator
<fmt list>	ProgramInformationTable@ProgramInformation@AVAttributes

Formatted: Font:

L.4 Mapping of IPTV Content Marker retrieval records to XML Schema for Service Attachment

Koninklijke KPN NV - Exhibit 2010
Samsung Electronics America, Inc. et al. v. Koninklijke KPN NV PTAB-IPR2025-00502
Page 195 of 237

This clause describes the mapping of IPTV Content Marker retrieval records to the generic XML Schema for service attachment defined in annex M and clause 5.2.2.3

This clause describes the mapping of IPTV Content Marker record to the generic XML schema for service attachment defined in annex M and clause 5.2.2.3.

TISPAN Element Name (copied from clause 5.2.2.3)	Corresponding IPTV Content Marker field
SSF	
@ID	TISPAN defined field
@Technology	When IPTV Content Marker retrieval is advertised, this field must be "tispan.org_iptvcontentmarker"
@Version	TISPAN defined field
Description	TISPAN defined field
ServiceProvider	Service Provider information
@DomainName	An internet DNS domain name registered by the Service Provider that uniquely identifies the Service Provider
@LogoURI	Pointer to a Service Provider logo for potential display
Name	Name of the Service Provider for display in one or more languages; one Service Provider name is allowed per language code, and at least one language shall be provided
Description	Description of the Service Provider for potential display in one or more languages; one description is allowed per language code
Pull	
@Location	Location of IPTV Content Marker retrieval
DataType	Type of IPTVContent Marker
@Type	Not applicable
Segment	Not applicable
@ID	Not applicable
@Version	Not applicable
Push	Not applicable
@IPVersion	
@MulticastAddress	Not applicable
@MulticastPort	Not applicable
@SourceAddress	Not applicable
DataType	Not applicable
@Type	Not applicable
Segment	Not applicable
@ID	Not applicable
@Version	Not applicable

L.5 Mapping of Download service for DVB technology

Table L.X: Mapping of SIP parameters for Download service - DVB technology

IPTV SIP parameters	DVB BCG
Request-URI	Locator defined in TS 102 034 [3]
NOTE: the Request-URI is an HTTP URI as defined in TS 102 034 [333] clause 10.3.2.2, e.g. http://announcements.provider1.org:80/dvb/cds/session_description?Segment=a0ff#?dvb-cds-session-id=102	

Formatted: Font: Arial, 9 pt, Check spelling and grammar

Koninklijke KPN NV - Exhibit 2010
Samsung Electronics America, Inc. et al. v. Koninklijke KPN NV PTAB-IPR2025-00502
Page 196 of 237

Table L.8: Mapping of SDP parameters for Download service - DVB technology

IPTV SDP parameters	DVB BCG
Connection Data at session level c=<network type> <address type> <connection address>	Not retrieved from SSF
<network type>	Not retrieved from SSF
<address type>	Not retrieved from SSF
<connection address>	Not retrieved from SSF
Media Announcements for content delivery m=<media> <port> <transport> <fmt list>	
<media>	"application" - Not retrieved from SSF
<port>	9- Not retrieved from SSF
<transport>	TCP, Not retrieved from SSF
<fmt>	" iptv_http " - Not retrieved from SSF
Bandwidth	BitRatetype as defined in TS 102 822-3-1 [333333], clause 6.3.5
Connection Data at media level c=<network type> <address type> <connection address>	
<network type>	Not retrieved from SSF
<address type>	Not retrieved form SSF
<connection address>	Not retrieved from SSF

Formatted: Font: Bold, (Asian) Chinese (Simplified, Mainland China), Check spelling and grammar

Koninklijke KPN NV - Exhibit 2010
Samsung Electronics America, Inc. et al. v. Koninklijke KPN NV PTAB-IPR2025-00502
Page 197 of 237

Annex M (normative): XML Schema for Service Attachment Information

This annex describes the XML schema for the service attachment information to be returned to UE by SDF. This XML schema is used when the service attachment information is transported via SIP Push mode and Pull mode as described in clauses 5.2.2.1 (Push mode) and 5.2.2.2 (Pull mode).

```
<?xml version="1.0" encoding="UTF-8"?>
<xs:schema xmlns:xs="http://www.w3.org/2001/XMLSchema" elementFormDefault="qualified"
attributeFormDefault="unqualified">

    <xs:element name="SSFList" type="tSSFList">
        <xs:annotation>
            <xs:documentation>XML Body of the SDF SIP Notify Response</xs:documentation>
        </xs:annotation>
    </xs:element>

    <xs:complexType name="tSSFList">
        <xs:sequence>
            <xs:element name="SSF" type="tSSF" maxOccurs="unbounded"/>
            <xs:element name="Extension" type="tExtension" minOccurs="0"/>
            <xs:any namespace="##other" processContents="lax" minOccurs="0" maxOccurs="unbounded"/>
        </xs:sequence>
        <xs:anyAttribute namespace="##other" processContents="lax"/>
    </xs:complexType>


    <xs:complexType name="tSSF">
        <xs:sequence>
            <xs:element name="Description" type="tMultilingual" minOccurs="0"
maxOccurs="unbounded"/>
            <xs:element name="ServiceProvider" type="tSSFServiceProvider" minOccurs="0"/>
            <xs:element name="Pull" type="tSSFPull" minOccurs="0" maxOccurs="unbounded"/>
            <xs:element name="Push" type="tSSFPush" minOccurs="0" maxOccurs="unbounded"/>
            <xs:element name="Extension" type="tExtension" minOccurs="0"/>
            <xs:any namespace="##other" processContents="lax" minOccurs="0" maxOccurs="unbounded"/>
        </xs:sequence>
        <xs:attribute name="ID" type="tHexadecimal16bit" use="required"/>
        <xs:attribute name="Technology" type="xs:string" use="required"/>
        <xs:attribute name="Version" type="tVersion">
            <xs:annotation>
                <xs:documentation>The version number is incremented when one or more attributes of
the SSF element have changed, so that the receiver knows whether it should update its data or
not.</xs:documentation>
            </xs:annotation>
        </xs:attribute>
        <xs:anyAttribute namespace="##other" processContents="lax"/>
    </xs:complexType>

    <xs:simpleType name="tVersion">
        <xs:restriction base="xs:integer">
            <xs:minInclusive value="0"/>
            <xs:maxInclusive value="255"/>
        </xs:restriction>
    </xs:simpleType>

    <xs:complexType name="tSSFServiceProvider">
        <xs:sequence>
            <xs:element name="Name" type="tMultilingual" maxOccurs="unbounded"/>
            <xs:element name="Description" type="tMultilingual" minOccurs="0"
maxOccurs="unbounded"/>
            <xs:element name="Extension" type="tExtension" minOccurs="0"/>
        </xs:sequence>
        <xs:attribute name="DomainName" type="tDomain" use="required">
            <xs:annotation>
                <xs:documentation>It is recommended that the DomainName complies with the "preferred
name syntax" of RFC1034 clause 3.5</xs:documentation>
            </xs:annotation>
        </xs:attribute>
        <xs:attribute name="LogoURI" type="xs:anyURI" use="optional"/>
        <xs:anyAttribute namespace="##other" processContents="lax"/>
    </xs:complexType>
```


Koninklijke KPN NV - Exhibit 2010
Samsung Electronics America, Inc. et al. v. Koninklijke KPN NV PTAB-IPR2025-00502
Page 198 of 237

```
    <xs:simpleType name="tDomain">
        <xs:restriction base="xs:string">
            <xs:pattern value="((.|\n|\r)*)?(\.(.|\n|\r)*)+"/>
        </xs:restriction>
    </xs:simpleType>

    <xs:complexType name="tSSFPull">
        <xs:complexContent>
            <xs:extension base="tDataTypeList">
                <xs:attribute name="Location" type="xs:anyURI" use="required"/>
                <xs:anyAttribute namespace="##other" processContents="lax">
                    <xs:annotation>
                        <xs:documentation>Extension attribute to define further
data</xs:documentation>
                    </xs:annotation>
                </xs:anyAttribute>
            </xs:extension>
        </xs:complexContent>
    </xs:complexType>

    <xs:complexType name="tSSFPush">
        <xs:complexContent>
            <xs:extension base="tDataTypeList">
                <xs:attribute name="IpVersion" type="tVersion" use="optional"/>
                <xs:attribute name="MulticastAddress" type="xs:string" use="required"/>
                <xs:attribute name="MulticastPort" type="xs:unsignedShort" use="required"/>
                <xs:attribute name="SourceAddress" type="xs:string" use="optional"/>
                <xs:anyAttribute namespace="##other" processContents="lax">
                    <xs:annotation>
                        <xs:documentation> Extension attribute to define further data
                        </xs:documentation>
                    </xs:annotation>
                </xs:anyAttribute>
            </xs:extension>
        </xs:complexContent>
    </xs:complexType>


    <xs:complexType name="tDataTypeList">
        <xs:sequence maxOccurs="unbounded">
            <xs:element name="DataType">
                <xs:complexType>
                    <xs:sequence minOccurs="0" maxOccurs="unbounded">
                        <xs:element name="Segment">
                            <xs:annotation>
                                <xs:documentation>Segments are used to logically separate Service
Selection information</xs:documentation>
                            </xs:annotation>
                            <xs:complexType>
                                <xs:attribute name="ID" type="tHexadecimal16bit" use="required"/>
                                <xs:attribute name="Version" type="tVersion" use="optional"/>
                            </xs:complexType>
                        </xs:element>
                    </xs:sequence>
                    <xs:attribute name="Type" type="tHexadecimal8bit" use="required">
                        <xs:annotation>
                            <xs:documentation> Specify the type of Service Selection Information
that is delivered by the SSF
                    </xs:documentation>
                        </xs:annotation>
                    </xs:attribute>
                </xs:complexType>
            </xs:element>
        </xs:sequence>
    </xs:complexType>

    <xs:complexType name="tExtension">
        <xs:sequence>
            <xs:any processContents="lax" minOccurs="0" maxOccurs="unbounded"/>
        </xs:sequence>
    </xs:complexType>

    <xs:complexType name="tMultilingual">
        <xs:simpleContent>
            <xs:extension base="xs:string">
                <xs:attribute name="Language" type="tLanguage" use="required"/>
            </xs:extension>
        </xs:simpleContent>
```


Koninklijke KPN NV - Exhibit 2010
Samsung Electronics America, Inc. et al. v. Koninklijke KPN NV PTAB-IPR2025-00502
Page 199 of 237

```
    </xs:complexType>

    <xs:simpleType name="tLanguage">
        <xs:restriction base="xs:string">
            <xs:annotation>
                <xs:documentation>
                    <definition xml:lang="en">ISO 639-2 Language code</definition>
                </xs:documentation>
            </xs:annotation>
            <xs:minLength value="3"/>
            <xs:maxLength value="3"/>
        </xs:restriction>
    </xs:simpleType>

    <xs:simpleType name="tHexadecimal8bit">
        <xs:restriction base="xs:string">
            <xs:pattern value="[0-9a-fA-F]{1,2}"/>
        </xs:restriction>
    </xs:simpleType>

    <xs:simpleType name="tHexadecimal16bit">
        <xs:restriction base="xs:string">
            <xs:pattern value="[0-9a-fA-F]{1,4}"/>
        </xs:restriction>
    </xs:simpleType>

</xs:schema>
```


Koninklijke KPN NV - Exhibit 2010
Samsung Electronics America, Inc. et al. v. Koninklijke KPN NV PTAB-IPR2025-00502
Page 200 of 237

Annex N (normative): Service Package SDP Attribute

The format of the a=bc_service_package attribute shall be the following:

- a= bc_service_package:< BCPackageId> [<mult_list> [<bc_tv_service_id_list>]]

  where:

  <mult_list> ::= mult_list:<source_unit>{"|"<source_unit>}

  <source_unit> ::= [src_list:"("<src-list>"),"]<multicast_address>{(","|"-")<multicast_address>}

  <src-list> ::= <source_address>{(","|"-")<source_address>}

  <source_address> ::= <IP_address>

  <multicast_address> ::= <IP_address>

  <bc_tv_service_id_list>::=<BCServiceId > {","< BCServiceId>}

  <BCServiceId > is the BC Service ID string defined in clause L.2

  <BCPackageId> is the service package ID string as defined in clause L.2

(BNF notation). As seen in this notation the multi_list parameter can contain one or more source_unit parameters with multicast addresses that can be separated with either "," or "-". When they are separated with "-" it means that it is a range of addresses. In addition there can optionally be a list of source addresses within the source unit parameter which is applicable for all the multicast addresses within the source unit parameter.

Koninklijke KPN NV - Exhibit 2010
Samsung Electronics America, Inc. et al. v. Koninklijke KPN NV PTAB-IPR2025-00502
Page 201 of 237

Annex O (normative): Procedure for definition of new SSF technologies

New SSF technologies may be defined for support of the TISPAN IPTV services. Two technologies are defined so far in the present document, OMA BCAST and DVB-IPTV. This annex describes how new technologies (e.g. browser based technologies) can be defined by organizations willing to use the framework provided in the present document.

The following procedure specifies how to define new technologies:

1) Definition of a technology. The Technology attribute of the XML schema defined in annex M is a string.

   The format of the Technology attribute shall be: <organization_name>_<subtechnology> where:

   - The organization_name shall be the ICANN registered domain name of the organization that defines its technology.
   - The subtechnology name identifies the SSF technology defined by the organization. It shall be unique within the context of the organization. It consists of one or more characters. Allowed characters are alphanumeric (i.e. 'a'-'z', 'A'-'Z', '0'-'9') plus the hyphen character ('-').

2) Definition of the service attachment XML schema defined in annex M as applicable to the newly defined technology. The technology uses the XML structure to carry all relevant information, following the definition described in clause 5.2.2.3. For example, the DataType XML element is used to carry information which is meaningful only with regards to the technology. Example of completed XML schemas can be found in clause L.1.

3) Definition of the service selection procedures associated with the newly specified technology, for the Pull mode and the Push mode, if used. Procedures defined within the present document may be reused.

4) Mapping of the service selection information to the IPTV services defined in the present document. Below is the mapping that has to be completed (provided the IPTV service is defined with the technology).

   - Mapping for BC Service (example is found in clause L.2).
   - Mapping for CoD Service (example is found in clause L.3).

Koninklijke KPN NV - Exhibit 2010
Samsung Electronics America, Inc. et al. v. Koninklijke KPN NV PTAB-IPR2025-00502
Page 202 of 237

Annex P (normative): XML Schema for UE Profile

This XML Schema defines the UE information that is specified by UE during service attachment and may be carried within body of the SIP SUBSCRIBE request.

The format of the attributes UserEquipmentID and IPEncapsulation is outside of the scope of the present document.

The usage and personalization of the service selection data based on the attributes UserEquipmentClass and IPEncapsulation is outside of the scope of the present document.

```
<?xml version="1.0" encoding="UTF-8"?>
<xs:schema
targetNamespace="urn:org:etsi:ngn:params:xml:ns:iptvueprofile"
xmlns="urn:org:etsi:ngn:params:xml:ns:iptvueprofile"
xmlns:xs="http://www.w3.org/2001/XMLSchema"
xmlns:tva="urn:tva:metadata:2005"
elementFormDefault="qualified" attributeFormDefault="unqualified">

<xs:import namespace="urn:tva:metadata:2005"
    schemaLocation="tva_metadata_3-1_v131.xsd"/>

    <xs:annotation>
        <xs:documentation xml:lang="en">
Defines the capabilities of the UE that is currently associated with the user
        </xs:documentation>
    </xs:annotation>

    <xs:element name="UEInformation" type="tUEProfile"/>
    <xs:complexType name="tUEProfile">
        <xs:sequence>
            <xs:element name="UserEquipmentID" type="tUEID"/>
            <xs:element name="UserEquipmentClass" type="tUserEquipmentClass"/>
            <xs:element name="Resolution" type="tResolution" minOccurs="0"/>
            <xs:element name="SupportedEncodings" type="tSupportedEncodings" minOccurs="0"
maxOccurs="unbounded"/>
            <xs:element name="IPEncapsulations" type="tIPEncapsulations" minOccurs="0"
maxOccurs="unbounded"/>
            <!-- extension mechanism -->
            <xs:element name="any" type="AnyType"></xs:element>
<xs:any namespace="##any" processContents="lax" minOccurs="0" maxOccurs="unbounded"/>
    </xs:sequence>
    </xs:complexType>

    <xs:complexType name="AnyType">
        <xs:sequence>
            <xs:any namespace="##any" processContents="lax" minOccurs="0" maxOccurs="unbounded"/>
        </xs:sequence>
    </xs:complexType>

    <xs:simpleType name="tUEID" final="list restriction">
        <xs:annotation>
            <xs:documentation>
                <label xml:lang="en">User Equipment ID</label>
                    <definition xml:lang="en">Unique Identifier for the UE(eg; Could be MAC address
of UE) </definition>
            </xs:documentation>
        </xs:annotation>

        <xs:restriction base="xs:string">
            <xs:minLength value="0"/>
            <xs:maxLength value="16"/>
        </xs:restriction>
    </xs:simpleType>

    <xs:simpleType name="tUserEquipmentClass" final="list restriction">
        <xs:annotation>
            <xs:documentation>
                <label xml:lang="en">User Equipment class</label>
                    <definition xml:lang="en">Specifies the type of UE </definition>
            </xs:documentation>
        </xs:annotation>
```


Koninklijke KPN NV - Exhibit 2010
Samsung Electronics America, Inc. et al. v. Koninklijke KPN NV PTAB-IPR2025-00502
Page 203 of 237

```
        <xs:restriction base="xs:string">
            <xs:enumeration value="STB"> </xs:enumeration>
            <xs:enumeration value="PC"> </xs:enumeration>
            <xs:enumeration value="Handset"> </xs:enumeration>
        </xs:restriction>
    </xs:simpleType>

    <xs:complexType name="tResolution">
        <xs:attribute name="HorizontalSize" type="xs:integer">
            <xs:annotation>
                <xs:documentation>horizontal size in pixels of the screen</xs:documentation>
            </xs:annotation>
        </xs:attribute>
        <xs:attribute name="VerticalSize" type="xs:integer">
            <xs:annotation>
                <xs:documentation>vertical size in pixels of the screen</xs:documentation>
            </xs:annotation>
        </xs:attribute>
        <xs:attribute name="Rotate" type="xs:boolean">
            <xs:annotation>
                <xs:documentation>set to TRUE if the screen can be rotated (horizontal becomes
vertical)</xs:documentation>
            </xs:annotation>
        </xs:attribute>
    </xs:complexType>

    <xs:complexType name="tSupportedEncodings">
        <xs:annotation>
            <xs:documentation>
                <label xml:lang="en">encodings</label>
                <definition xml:lang="en">Specifies the supported combinations of audio and video
encodings (eg. MPEG2,H264 AC3, AAC etc)</definition>
            </xs:documentation>
        </xs:annotation>
        <xs:sequence>
            <xs:element name="AudioEncoding" type="tAudioEncoding" minOccurs="0"
maxOccurs="unbounded"/>
            <xs:element name="VideoEncoding" type="tVideoEncoding" minOccurs="0"
maxOccurs="unbounded"/>
        </xs:sequence>
    </xs:complexType>

    <xs:complexType name="tAudioEncoding">
        <xs:annotation>
            <xs:documentation>
                <label xml:lang="en">Audio Encoding</label>
                <definition xml:lang="en">Specifies supported audio encoding properties</definition>
            </xs:documentation>
        </xs:annotation>
        <xs:sequence>
            <xs:element name="Encoding" type="tva:ControlledTermType"/>
            <!-- extension mechanism -->
            <xs:element name="any" type="AnyType"></xs:element>
        </xs:sequence>
    </xs:complexType>

    <xs:complexType name="tVideoEncoding">
        <xs:annotation>
            <xs:documentation>
                <label xml:lang="en">Video Encoding</label>
                <definition xml:lang="en"> Specifies supported video encoding properties
</definition>
            </xs:documentation>
        </xs:annotation>
        <xs:sequence>
            <xs:element name="Encoding" type="tva:ControlledTermType"/>
            <xs:element name="SupportedFrameRate" type="tva:FrameRateType" minOccurs="0"
maxOccurs="unbounded"/>
            <!-- extension mechanism -->
            <xs:any namespace="##other" processContents="lax" minOccurs="0" maxOccurs="unbounded"/>
        </xs:sequence>
    </xs:complexType>

    <xs:simpleType name="tIPEncapsulations">
        <xs:annotation>
            <xs:documentation>
                <label xml:lang="en">encapsulation</label>
```


Koninklijke KPN NV - Exhibit 2010
Samsung Electronics America, Inc. et al. v. Koninklijke KPN NV PTAB-IPR2025-00502
Page 204 of 237

```
                <definition xml:lang="en">Specifies the IP encapsulation that is supported on device
("UDP/RTP" or "UDP/M2TS" or "UDP/RTP/M2TS")
 </definition>
            </xs:documentation>
        </xs:annotation>
        <xs:restriction base="xs:string">
            <xs:enumeration value="UDP/RTP"> </xs:enumeration>
            <xs:enumeration value="UDP/M2TS"> </xs:enumeration>
            <xs:enumeration value="UDP/RTP/M2TS"> </xs:enumeration>
        </xs:restriction>
    </xs:simpleType>
</xs:schema>
```

Example of XML document conforming to this structure. The SupportedEncoding field carries the list of the several coding format that the device can handle. The Name element is optional, it is presented herein for user readability.

```
<?xml version="1.0" encoding="UTF-8"?>
<UEInformation xmlns="?" xmlns:xsi="http://www.w3.org/2001/XMLSchema-instance">
    <UserEquipmentID>STB-dc14b2</UserEquipmentID>
    <UserEquipmentClass>STB</UserEquipmentClass>
    <Resolution Horizontal="720" Vertical="576" Rotate="FALSE"/>
    <SupportedEncodings>
        <AudioEncoding>
            <Encoding href="urn:mpeg:mpeg7:cs:AudioCodingFormatCS:2001:3">
                <Name>MPEG-1 Audio</Name>
            </Encoding>
        </AudioEncoding>
        <AudioEncoding>
            <Encoding href="urn:mpeg:mpeg7:cs:AudioCodingFormatCS:2001:5.4">
                <Name>MPEG-4 Main Audio Profile</Name>
            </Encoding>
        </AudioEncoding>
        <AudioEncoding>
            <Encoding href="urn:mpeg:mpeg7:cs:AudioCodingFormatCS:2001:5.5">
                <Name>MPEG-4 High Quality Audio Profile</Name>
            </Encoding>
        </AudioEncoding>
        <AudioEncoding>
            <Encoding href="urn:dvb:metadata:cs:AudioCodecCS:2007:1">
                <Name>MPEG-4 DVB Audio</Name>
            </Encoding>
        </AudioEncoding>
        <VideoEncoding>
            <Encoding href="urn:mpeg:mpeg7:cs:VisualCodingFormatCS:2001:1">
                <Name>MPEG-1 Video</Name>
            </Encoding>
        </VideoEncoding>
        <VideoEncoding>
            <Encoding href="urn:mpeg:mpeg7:cs:VisualCodingFormatCS:2001:2.2">
                <Name>MPEG-2 Video Main Profile</Name>
            </Encoding>
        </VideoEncoding>
        <VideoEncoding>
            <Encoding href="urn:dvb:metadata:cs:VideoCodecCS:2007:1.1">
                <Name>H264 Baseline Profile</Name>
            </Encoding>
            <SupportedFrameRate>30</SupportedFrameRate>
        </VideoEncoding>
        <VideoEncoding>
            <Encoding href="urn:dvb:metadata:cs:VideoCodecCS:2007:1.2">
                <Name>H264 Main Profile</Name>
            </Encoding>
            <SupportedFrameRate>30</SupportedFrameRate>
            <SupportedFrameRate>24</SupportedFrameRate>
        </VideoEncoding>
        </SupportedEncodings>
    <IPEncapsulation>M2TS/UDP</IPEncapsulation>
    <IPEncapsulations>M2TS/RTP</IPEncapsulations>
</UEInformation>
```


Koninklijke KPN NV - Exhibit 2010
Samsung Electronics America, Inc. et al. v. Koninklijke KPN NV PTAB-IPR2025-00502
Page 205 of 237

Annex Q (informative): Combination of SIP and RTSP protocols for content on demand

The SIP procedures described in clause 5 influence which of the two RTSP methods described in clause 7 to be used. Figures Q.1 and Q.2 specify the decision logic of the UE and the MCF respectively.

Q.1 User Equipment (UE) side RTSP method decision logic

Figure Q.1 shows the UE-side RTSP method decision logic.

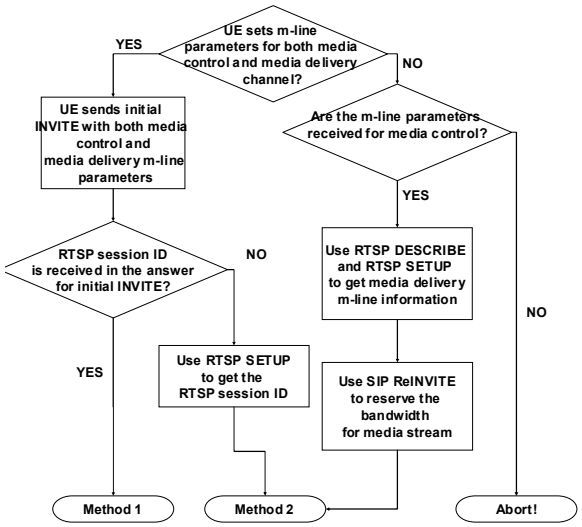

Figure Q.1: UE-side RTSP method decision logic

Koninklijke KPN NV - Exhibit 2010
Samsung Electronics America, Inc. et al. v. Koninklijke KPN NV PTAB-IPR2025-00502
Page 206 of 237

Q.2 Media Control Function (MCF) side RTSP method decision logic

Figure Q.2 shows the MCF-side RTSP method decision logic.

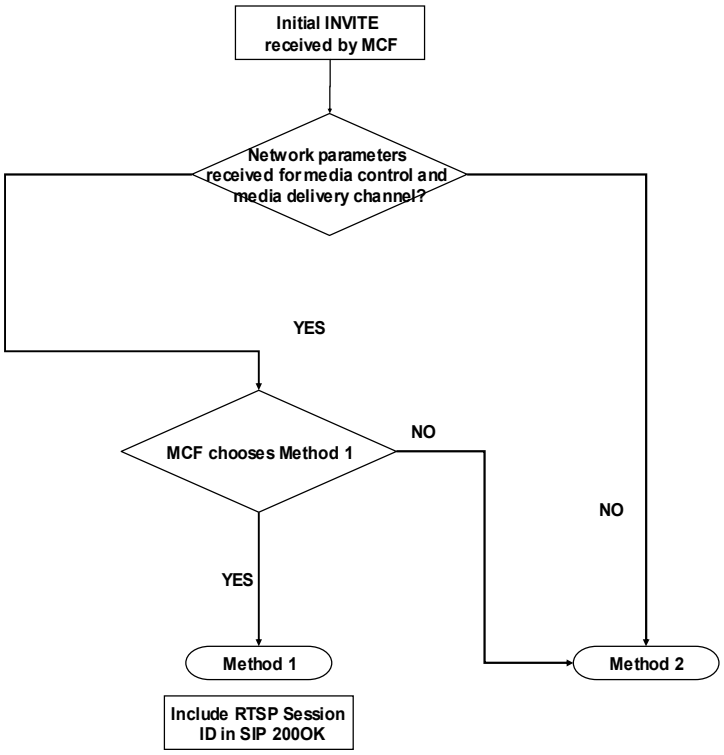

Figure Q.2: MCF-side RTSP method decision logic

Koninklijke KPN NV - Exhibit 2010
Samsung Electronics America, Inc. et al. v. Koninklijke KPN NV PTAB-IPR2025-00502
Page 207 of 237

Annex R (informative): Initial Filter Criteria

Beyond the method name, (SUBCRIBE, INVITE, etc.), the following elements may be used a service trigger point to build initial filter criteria enabling Application Servers to be involved in the processing of IPTV procedures:

- The event name of a SUBSCRIBE request.
- The contents of the Accept header in a SUBSCRIBE request (e.g. MIME types).
- The contents of the P-Preferred-Service header or the Accept-Contact header (i.e. ICSI).
- The Request-URI, in which case the content tag will typically contain an Extended Regular Expressions (ERE) as defined in clause 9 in IEEE 1003.1-2004 [i.5i.5~~i.5~~] such that any Request-URI that includes a particular pattern (e.g. a domain name) matches the criteria.

The actual list of criteria depends on whether the public user identity is dedicated to the IPTV service or not.

The following example illustrates the case of an IFC used to trigger an application server that provides the SDF function only.

```
<InitialFilterCriteria>
    <Priority>0</Priority>
    <TriggerPoint>
        <ConditionTypeCNF>0</ConditionTypeCNF>
        <SPT>
            <ConditionNegated>0</ConditionNegated>
            <Group>0</Group>
            <Method>INVITE</Method>
        </SPT>
        <SPT>
            <ConditionNegated>0</ConditionNegated>
            <Group>0</Group>
            <RequestURI>@iptvdiscovery.homedomain.com$</RequestURI>
        </SPT>
    </TriggerPoint>
    <ApplicationServer>
        <ServerName>sip:SDF-AS1@homedomain.com</ServerName>
        <DefaultHandling>0</DefaultHandling>
    </ApplicationServer>
</InitialFilterCriteria>
```


Koninklijke KPN NV - Exhibit 2010
Samsung Electronics America, Inc. et al. v. Koninklijke KPN NV PTAB-IPR2025-00502
Page 208 of 237

Annex S (normative): XML Schema for IPTV Notification

```
<?xml version="1.0" encoding="UTF-8"?>
<xs:schema targetNamespace="urn:org:etsi:ngn:params:xml:ns:iptvnotification"
xmlns="urn:org:etsi:ngn:params:xml:ns:iptvnotification"
xmlns:xs="http://www.w3.org/2001/XMLSchema"
xmlns:nt="urn:org:etsi:ngn:params:xml:ns:iptvnotification" attributeFormDefault="unqualified">

    <xs:element name="IPTVNotification" type="tIPTVNotification" />
    <xs:complexType name="tIPTVNotification">
        <xs:sequence>
            <xs:element name="NotificationReason" type="tNotificationReason" minOccurs="1"
maxOccurs="1" />
            <xs:element name="NotificationSender" type="xs:string" minOccurs="0" />
            <xs:element name="ContentIdentifier" type="xs:anyURI" minOccurs="0" />
            <xs:element name="NotificationReceiver" type="xs:string" minOccurs="0" />
            <xs:choice>
                <xs:element name="MediaPathNotificationInfo" type="tMediaPathNotificationInfo" />
                <xs:element name="ContentInsertionInfo" type="tContentInsertionInfo" />
                <xs:element name="IncomingCallInfo" type="tIncomingCallInfo" />
                <xs:element name="CPVRRecordInfo" type="tCPVRRecordInfo" />
                <xs:element name="ContentRecommendationInfo" type="tContentRecommendationInfo" />
                <xs:element name="Extension" type="tExtension" minOccurs="0" maxOccurs="unbounded"/>
            </xs:choice>
        </xs:sequence>
    </xs:complexType>

    <xs:simpleType name="tNotificationReason">
        <xs:restriction base="xs:string">
            <xs:enumeration value="ContentInsertion" />
            <xs:enumeration value="InstantMessage" />
            <xs:enumeration value="IncomingCall" />
            <xs:enumeration value="CPVRRecord" />
            <xs:enumeration value="ContentRecommendation" />
        </xs:restriction>
    </xs:simpleType>

    <xs:complexType name="tMediaPathNotificationInfo">
        <xs:sequence>
            <xs:element name="MulticastAddress" type="xs:string" minOccurs="1" />
            <xs:choice>
                <xs:element name="InstantMessageInfo" type="xs:string" minOccurs="0" />
                <xs:element name="Extension" type="tExtension" minOccurs="0" />
            </xs:choice>
        </xs:sequence>
    </xs:complexType>

    <xs:complexType name="tContentInsertionInfo">
        <xs:sequence>
            <xs:element name="SessionId" type="xs:string" minOccurs="1" />
            <xs:element name="ContentInsertionReason" type="tContentInsertionReason" minOccurs="1"
/>
            <xs:element name="ContentInsertionTime" minOccurs="0">
                <xs:complexType>
                    <xs:sequence>
                        <xs:element name="ContentInsertionStartTime" type="xs:dateTime" />
                        <xs:element name="ContentInsertionDuration" type="xs:duration" />
                    </xs:sequence>
                </xs:complexType>
            </xs:element>
            <xs:choice>
                <xs:element name="MulticastContent" type="xs:anyURI" />
                <xs:element name="UnicastContent" type="xs:anyURI" />
            </xs:choice>
        </xs:sequence>
    </xs:complexType>

    <xs:simpleType name="tContentInsertionReason">
        <xs:restriction base="xs:string">
            <xs:enumeration value="Advertising" />
            <xs:enumeration value="PausedContent" />
            <xs:enumeration value="Generic" />
```


Koninklijke KPN NV - Exhibit 2010
Samsung Electronics America, Inc. et al. v. Koninklijke KPN NV PTAB-IPR2025-00502
Page 209 of 237

```
            <xs:enumeration value="Extension" />
        </xs:restriction>
    </xs:simpleType>


    <xs:complexType name="tIncomingCallInfo">
        <xs:sequence>
            <xs:element name="CallerID" type="xs:anyURI" minOccurs="1" />
        </xs:sequence>
    </xs:complexType>

    <xs:complexType name="tCPVRRecordInfo">
        <xs:sequence>
            <xs:element name="CPVRContentID" type="xs:anyURI" minOccurs="0" />
            <xs:element name="BCServiceId" type="xs:anyURI" minOccurs="1" />
            <xs:element name="RecordEndDate" type="xs:dateTime" minOccurs="1" />
        </xs:sequence>
    </xs:complexType>

    <xs:complexType name="tContentRecommendationInfo" >
        <xs:sequence>
            <xs:element name="ContentIdentifer" minOccurs="1" maxOccurs="unbounded">
                <xs:complexType>
                    <xs:simpleContent>
                        <xs:extension base="xs:anyURI">
                            <xs:attribute name="ServiceType" type="xs:string" use="optional"/>
                        </xs:extension>
                    </xs:simpleContent>
                </xs:complexType>
            </xs:element>
        </xs:sequence>
    </xs:complexType>


    <xs:complexType name="tExtension">
        <xs:annotation>
            <xs:documentation>
                This element is reserved for further extensions
            </xs:documentation>
        </xs:annotation>
        <xs:sequence>
            <xs:any processContents="lax" minOccurs="0" maxOccurs="unbounded" />
        </xs:sequence>
    </xs:complexType>

    </xs:schema>
```

Annex T (normative): XML Schema for Restricted Trick Play

```
<?xml version="1.0" encoding="UTF-8"?>
<xs:schema
xmlns:xs="http://www.w3.org/2001/XMLSchema"
xmlns:uep="urn:org:etsi:ngn:params:xml:ns:iptvrestrictedtrickplay"
elementFormDefault="qualified"
attributeFormDefault="unqualified">

    <xs:element name="IPTVRestrictedTrickPlay">
        <xs:complexType>
            <xs:sequence>
                <xs:element name="RestrictedTrcikPlayPolicy" maxOccurs="unbounded" />
            </xs:sequence>
        </xs:complexType>
    </xs:element>

    <xs:element name="RestrictedTrickPlayPolicy">
        <xs:complexType>
            <xs:sequence>
                <xs:element name="ContentID" type="xs:string" minOccurs="0"/>
                <xs:element name="StartTime" type="xs:string" minOccurs="0"/>
                <xs:element name="EndTime" type="xs:string" minOccurs="0"/>
                <xs:element name="RTSPOperation" type="tRTSPOperation" maxOccurs="unbounded"/>
                <xs:element name="Extension" type="tExtension" minOccurs="0"/>
```


Koninklijke KPN NV - Exhibit 2010
Samsung Electronics America, Inc. et al. v. Koninklijke KPN NV PTAB-IPR2025-00502
Page 210 of 237

```
            </xs:sequence>
        </xs:complexType>
    </xs:element>

    <xs:complexType name="tExtension">
        <xs:sequence>
            <xs:any processContents="lax" minOccurs="0" maxOccurs="unbounded"/>
        </xs:sequence>
    </xs:complexType>

    <xs:simpleType name="tRTSPOperation">
        <xs:restriction base="xs:unsignedByte">
            <xs:minInclusive value="0"/>
            <xs:maxInclusive value="1"/>
            <xs:enumeration value="0">
                <xs:annotation>
                    <xs:documentation>
                        <label xml:lang="en">FastForward</label>
                        <definition xml:lang="en">Reqeust to fast forward</definition>
                    </xs:documentation>
                </xs:annotation>
            </xs:enumeration>
            <xs:enumeration value="1">
                <xs:annotation>
                    <xs:documentation>
                        <label xml:lang="en">Pause</label>
                        <definition xml:lang="en">Request to pause</definition>
                    </xs:documentation>
                </xs:annotation>
            </xs:enumeration>
        </xs:restriction>
    </xs:simpleType>

</xs:schema>
```


Koninklijke KPN NV - Exhibit 2010
Samsung Electronics America, Inc. et al. v. Koninklijke KPN NV PTAB-IPR2025-00502
Page 211 of 237

Annex U (normative): XML Schema for PCh Conflict Option & Choice data

```
<?xml version="1.0" encoding="UTF-8"?>
<xs:schema targetNamespace="urn:org:etsi:ngn:params:xml:ns:iptvpchdata"
xmlns="urn:org:etsi:ngn:params:xml:ns:iptvpchdata"
xmlns:ns="urn:org:etsi:ngn:params:xml:ns:iptvpchdata" xmlns:xs="http://www.w3.org/2001/XMLSchema"
elementFormDefault="qualified" attributeFormDefault="unqualified">

<xs:element name="PChConflictOptionData">
    <xs:complexType>
        <xs:sequence>
            <xs:element name="ConflictOption" type="tPChConflictOption" minOccurs="1"
maxOccurs="unbounded"/>
        </xs:sequence>
        </xs:complexType>
</xs:element>

<xs:element name="PChConflictChoiceData" type="tPChConflictOption" />

<xs:simpleType name="tPChConflictOption">
    <xs:restriction base="xs:string">
        <xs:enumeration value="PlayAndRecord">
            <xs:annotation>
                <xs:documentation>
                    <definition xml:lang="en"> Keeps the on-going session alive and initiates
another task for recording the upcoming BC content </definition>
                </xs:documentation>
            </xs:annotation>
        </xs:enumeration>
        <xs:enumeration value="PlayAndDelay">
            <xs:annotation>
                <xs:documentation>
                    <definition xml:lang="en"> Keeps the on-going session alive and delay the play
of the upcoming CoD content by modifying the PCh profile info </definition>
                </xs:documentation>
            </xs:annotation>
        </xs:enumeration>
        <xs:enumeration value="SwitchAndMark">
            <xs:annotation>
                <xs:documentation>
                    <definition xml:lang="en"> Teardown the on-going session, mark the current CoD
content play information, and switch to the next PCh item as indicated </definition>
                </xs:documentation>
            </xs:annotation>
        </xs:enumeration>
        <xs:enumeration value="SwitchAndRecord">
            <xs:annotation>
                <xs:documentation>
                    <definition xml:lang="en"> Teardown the on-going session, record the current BC
content, and switch to the next PCh item as indicated </definition>
                </xs:documentation>
            </xs:annotation>
        </xs:enumeration>
        <xs:enumeration value="PlayAndSwitch">
            <xs:annotation>
                <xs:documentation>
                    <definition xml:lang="en"> Keep the on-going session alive till its end and
switch to the next PCh item as indicated </definition>
                </xs:documentation>
            </xs:annotation>
        </xs:enumeration>
    </xs:restriction>
</xs:simpleType>
</xs:schema>
```


Koninklijke KPN NV - Exhibit 2010
Samsung Electronics America, Inc. et al. v. Koninklijke KPN NV PTAB-IPR2025-00502
Page 212 of 237

Annex V (normative): XML Schema for IPTV Content Marker

```
<?xml version="1.0" encoding="UTF-8"?>
<xs:schema targetNamespace="urn:org:etsi:ngn:params:xml:ns:iptvinformation"
xmlns:xs="http://www.w3.org/2001/XMLSchema"
xmlns="urn:org:etsi:ngn:params:xml:ns:iptvinformation" elementFormDefault="qualified"
attributeFormDefault="unqualified">
    <xs:element name="IPTVContentMarkerRequest">
        <xs:complexType>
            <xs:sequence>
                <xs:element name="IPTVInformationDataCommand" type="tIPTVInformationDataCommand" />
                <xs:element name="IPTVContentMarker" type="tIPTVContentMarker"
maxOccurs="unbounded"/>
            </xs:sequence>
        </xs:complexType>
    </xs:element>

    <xs:simpleType name="tIPTVInformationDataCommand">
        <xs:restriction base="xs:string">
            <xs:enumeration value="Update" />
            <xs:enumeration value="Retrieval" />
        </xs:restriction>
    </xs:simpleType>

    <xs:complexType name="tIPTVContentMarker">
        <xs:sequence>
            <xs:element name="IPTVContentMarkerID" type="xs:string"/>
            <xs:element name="OwnerUserID" type="xs:string" />
            <xs:element name="ForbiddenViewUser" type="xs:string" minOccurs="0"
maxOccurs="unbounded" />
            <xs:element name="IPTVServiceType" type="xs:string" />
            <xs:element name="StartTimeOfIPTVContentMarker" type="xs:dateTime" minOccurs="0"/>
            <xs:element name="EndTimeOfIPTVContentMarker" type="xs:dateTime" minOccurs="0"/>
            <xs:element name="Tag" type="xs:string" minOccurs="0"/>
            <xs:element name="Rank" type="xs:string" minOccurs="0"/>
            <xs:element name="UserComment" type="xs:string"/>
            <xs:element name="GenerationTime" type="tExtension" minOccurs="0"/>
            <xs:element name="ExpiryTime" type="tExpiryTime" minOccurs="0"/>
            <xs:element name="RetrievalCount" type="xs:nonNegativeInteger" minOccurs="0"/>
            <xs:element name="RetrievalTime" type="xs:dateTime" minOccurs="0"
maxOccurs="unbounded"/>
        </xs:sequence>
    </xs:complexType>

    <xs:complexType name="tExtension">
        <xs:sequence>
            <xs:any processContents="lax" minOccurs="0" maxOccurs="unbounded"/>
        </xs:sequence>
   </xs:complexType>

    <xs:simpleType name="tExpiryTime" >
        <xs:union memberTypes="tExpiryTimeException xs:dateTime"/>
    </xs:simpleType>
    <xs:simpleType name="tExpiryTimeException">
        <xs:restriction base="xs:integer">
            <xs:pattern value="(-1|0)"/>
        </xs:restriction>
    </xs:simpleType>
</xs:schema>
```


Koninklijke KPN NV - Exhibit 2010
Samsung Electronics America, Inc. et al. v. Koninklijke KPN NV PTAB-IPR2025-00502
Page 213 of 237

Annex W (normative): Inter-destination media synchronization

W.1 RTCP XR Block Type for inter-destination media synchronization

Figure W.1 describes the RTCP XR Block Type for reporting inter-destination media synchronization information on an RTP media stream. Its definition is based on [45]. The RTCP XR is used to report information on receipt times and presentation times of RTP packets to e.g. a Sender [44], a Feedback Target [43] or a Third Party Monitor [44]. The RTCP XR is also used to indicate synchronization settings instructions to a receiver of the RTP media stream.

```
 0                   1                   2                   3

 0 1 2 3 4 5 6 7 8 9 0 1 2 3 4 5 6 7 8 9 0 1 2 3 4 5 6 7 8 9 0 1
+-+-+-+-+-+-+-+-+-+-+-+-+-+-+-+-+-+-+-+-+-+-+-+-+-+-+-+-+-+-+-+-+
|V=2|P| Resrv   |   PT=XR=207   |             length            |
+-+-+-+-+-+-+-+-+-+-+-+-+-+-+-+-+-+-+-+-+-+-+-+-+-+-+-+-+-+-+-+-+
|                     SSRC of packet sender                     |
+=+=+=+=+=+=+=+=+=+=+=+=+=+=+=+=+=+=+=+=+=+=+=+=+=+=+=+=+=+=+=+=+
|     BT=TBD      | SPST  |Resrv|P|        block length=7         |
+-+-+-+-+-+-+-+-+-+-+-+-+-+-+-+-+-+-+-+-+-+-+-+-+-+-+-+-+-+-+-+-+
|     PT      |               Resrv                             |
+-+-+-+-+-+-+-+-+-+-+-+-+-+-+-+-+-+-+-+-+-+-+-+-+-+-+-+-+-+-+-+-+
|              Media Stream Correlation Identifier               |
+-+-+-+-+-+-+-+-+-+-+-+-+-+-+-+-+-+-+-+-+-+-+-+-+-+-+-+-+-+-+-+-+
|                     SSRC of media source                      |
+-+-+-+-+-+-+-+-+-+-+-+-+-+-+-+-+-+-+-+-+-+-+-+-+-+-+-+-+-+-+-+-+
|      Packet Received NTP timestamp, most significant word     |
+-+-+-+-+-+-+-+-+-+-+-+-+-+-+-+-+-+-+-+-+-+-+-+-+-+-+-+-+-+-+-+-+
|      Packet Received NTP timestamp, least significant word    |
+-+-+-+-+-+-+-+-+-+-+-+-+-+-+-+-+-+-+-+-+-+-+-+-+-+-+-+-+-+-+-+-+
|              Packet Received RTP timestamp                    |
+-+-+-+-+-+-+-+-+-+-+-+-+-+-+-+-+-+-+-+-+-+-+-+-+-+-+-+-+-+-+-+-+
|              Packet Presented NTP timestamp                   |
+-+-+-+-+-+-+-+-+-+-+-+-+-+-+-+-+-+-+-+-+-+-+-+-+-+-+-+-+-+-+-+-+
```

Figure W.1: RTCP XR Block Type for inter-destination media synchronization.

The first 64 bits form the header of the RTCP XR, as defined in [45]. The SSRC of packet sender identifies the sender of the specific RTCP packet.

- **Block Type** (BT): 8 bits. It identifies the block format. Its value shall be set to TBD.

Editor's note: IANA decides on the allocation of the Block Type value. This clause should be updated with "TBD" to be replaced by the IANA-assigned BT value.

- **Synchronization Packet Sender Type** (SPST): 4 bits. This field indentifies the role of the packet sender for this specific eXtended Report. It can have the following values:

Koninklijke KPN NV - Exhibit 2010
Samsung Electronics America, Inc. et al. v. Koninklijke KPN NV PTAB-IPR2025-00502
Page 214 of 237

SPST value	Role of packet sender	Details
0	Reserved	For future use.
1	SC, see clause 5.7.	The packet sender uses this XR to report synchronization status information. Timestamps relate to the SC input.
2	MSAS, see clause 5.8.	The packet sender uses this XR to report synchronization settings instructions. Timestamps relate to the input of a virtual SC, which acts as reference to which the SCs connected to this MSAS are synchronized.
3	SC' input	The packet sender uses this XR to report synchronization correlation information related to the incoming media stream of SC'. Timestamps relate to the SC' input.
4	SC'output	The packet sender uses this XR to report synchronization correlation information related to the outgoing media stream of SC'. Timestamps relate to the SC' input. (see Note below)
5-15	Reserved	For future use.

NOTE: Following the RTP/RTCP specification [44], RTP timestamps relate to the arrival time of the first octet of an RTP packet. In case of SPST=4 (SC' output), there is not such an arrival time as the media stream is re-originated at the SC'. In this case, the timestamp would relate to the arrival time of the equivalent octet (representing e.g. the same video pixel or audio sample) of the incoming media steam.

Table W.1: Synchronization Packet Sender Types (SPST).

- **Reserved bits** (Resrv): 3 bits. These bits are reserved for future use and shall be set to 0.
- **Packet Presented NTP timestamp flag** (P): 1 bit. Bit set to 1 if the Packet Presented NTP timestamp contains a value, 0 if it is empty. If this flag is set to zero, then the Packet Presented NTP timestamp shall not be inspected.
- **Block Length**: 16 bits. This shall be set to 7, as this RTCP Block Type has a fixed length.
- **Payload Type** (PT): 7 bits. This field identifies the format of the media payload, according to [59]. The media payload is associated with an RTP timestamp clock rate. This clock rate provides the time base for the RTP timestamp counter.
- **Reserved bits** (Resrv): 25 bits. These bits are reserved for future use and shall be set to 0.
- **Media Stream Correlation Identifier**: 32 bits. This identifier is used to correlate synchronized media streams. The value 0 (all bits are set "0") indicates that this field is empty. The value 2^32-1 (all bits are set "1") is reserved for future use. If the RTCP Packet Sender is an SC or an MSAS (SPST=1 or SPST=2), then the Media Stream Correlation Identifier maps on the SyncGroupId. If the RTCP Packet Sender is an SC' (SPST=3 or SPST=4), related incoming and outgoing media streams have the same Media Stream Correlation Identifier.
- **SSRC**: 32 bits. The SSRC of the media source shall be set to the value of the SSRC identifier carried in the RTP header [44] of the RTP packet to which the XR relates.
- **Packet Received NTP timestamp**: 64 bits. This NTP timestamp [58] is the arrival wallclock time of the first octet of the RTP packet to which the XR relates. For SPST=2 it relates to a virtual SC to which the other SCs in the synchronization group may synchronize. For SPST=4 the SC' should calculate backwards when the content (video frame, audio sample) associated with the first octet of the RTP packet arrived. As specified in Clause 11.3.2, SCs shall be NTP synchronized.
- **Packet Received RTP timestamp**: 32 bits. This timestamp has the value of the RTP time stamp carried in the RTP header [44] of the RTP packet to which the XR relates.
- **Packet Presented NTP timestamp:** 32 bits. This timestamp reflects the NTP time when the data contained in the first octet of the associated RTP packet is presented to the user. It consists of the least significant 16 bits of

Koninklijke KPN NV - Exhibit 2010
Samsung Electronics America, Inc. et al. v. Koninklijke KPN NV PTAB-IPR2025-00502
Page 215 of 237

the NTP seconds part and the most significant 16 bits of the NTP fractional second part. If this field is empty, then it shall be set to 0 and the Packet Presented NTP timestamp flag (P) shall be set to 0. It shall be empty for SPST=3 and SPST=4.

W.2 SDP parameter for inter-destination media synchronization

The SDP parameter sync-group is used to signal the use of the RTCP XR block for inter-destination media synchronization specified in Annex W.1. This SDP parameter extends rtcp-xr-attrib as follows, using Augmented Backus-Naur Form [64].

rtcp-xr-attrib = "a=" "rtcp-xr" ":" [xr-format *(SP xr-format)] CRLF ; Original definition from RFC 3611 [45], section 5.1

xr-format =/ grp-sync ; Extending xr-format for inter-destination media synchronization

grp-sync = "grp-sync" [",sync-group=" SyncGroupId]

SyncGroupId = 1*DIGIT ; Numerical value from 0 till 4294967295

DIGIT = %x30-39

SyncGroupId is a 32-bit unsigned integer in network byte order and represented in decimal. SyncGroupId identifies a group of SCs for inter-destination media synchronization. It maps on the Media Stream Correlation Identifier of Annex W.1 for SPST=1 and SPST=2. The value SyncGroupId=0 represents an empty SyncGroupId. The value 4294967295 (2^32-1) is reserved for future use.

The following is an example of the SDP attribute for inter-destination media synchronization.

- a=rtcp-xr:grp-sync,sync-group=42

W.3 Introduction to inter-destination media synchronization (informative)

This clause provides an informal introduction to inter-destination media synchronization to aid the understanding of Annex W. Detailed procedures are provided in the main body of this specification.

The purpose of inter-destination media synchronization is achieving that content is played out synchronously on terminals of two or more users watching the same content, compensating for delay difference caused by transport, coding and other.

The following functional elements are involved in inter-destination media synchronization.

- SC: Synchronization Client
  - Mapping 1: SC in User Equipment (UE), supports both SIP and RTCP signalling
  - Mapping 2: SC in Transport Processing Functions, supports only RTCP signalling
- MSAS: Media Synchronization Application Server
  - Session-oriented part for SIP signalling, typically co-located with the Sevice Control Function (SCF)
  - Media-oriented part for RTCP signalling, typically separate from the session-oriented part and closer to the media streams
- SC': Synchronization Client prime
  - Option for functional entities that modify and/or re-originate media streams, like transcoders

If SIP is supported (mapping 1) then the SC may initiate a synchronization session by including the "a=rtcp-xr:grp-sync,sync-group=<SyncGroupId>" SDP attribute in the SIP message. The SyncGroupId identifies the group of SCs involved in inter-destination media synchronization, which is similar to the ConferenceId in a conference call.

Koninklijke KPN NV - Exhibit 2010
Samsung Electronics America, Inc. et al. v. Koninklijke KPN NV PTAB-IPR2025-00502
Page 216 of 237

The session-oriented part of the MSAS responds to the SC, providing the IP address and port number of the media-oriented part of the MSAS and providing or confirming the SyncGroupId.

There are several variations to the SIP signalling, depending whether inter-destination media synchronization is initiated together with session initiation or later in the session, and on the SIP/RTSP signalling method used.

RTCP signalling SC, SC' and MSAS uses the RTCP XR specified in Annex W.1. The Synchronization Packet Sender Type (SPST) indentifies the role of the packet sender for this specific eXtended Report.

- From SC to MSAS: synchronization status information, such as arrival time information (SPST=1)
- From MSAS to SC: delay infromation in the form of synchronization settings instructions (SPST=2)
- From SC' to MSAS: synchronization correlation information
  - related to the SC' input (SPST=3)
  - related to an SC' output (SPST=4)

RTCP signalling is used between SC and MSAS, and from SC' to MSAS, using the RTCP XR specified in Annex W.1. The Synchronization Packet Sender Type (SPST) indentifies the role of the packet sender for this specific eXtended Report.

The Media Stream Correlation Identifier identifier is used to correlate synchronized media streams. For SC it corresponds to the SyncGroupId. For SC' is it used to correlate the input and output(s) for a specific media stream.

Together, arrival time infotmation such as the Packet Received NTP timestamp, Packet Received RTP timestamp and the Packet Presented NTP timestamp indicate at what wall-clock time an RTP packet passed or should pass a specific point in an SC or SC'.

Annex X (normative): XML Schema for Content Switch

```
<?xml version="1.0" encoding="UTF-8"?>
<xs:schema
xmlns:xs="http://www.w3.org/2001/XMLSchema"
xmlns:uep="urn:org:etsi:ngn:params:xml:ns:iptvcontentswitch"
elementFormDefault="qualified"
attributeFormDefault="unqualified">

<xs:element name="IPTVContentSwitch">
    <xs:complexType>
        <xs:sequence>
            <xs:element name="SwitchedContentItem" type="tSwitchedContentItem" maxOccurs="unbounded"
/>
        </xs:sequence>
        <xs:attribute name="content-id" type="xs:string" use="required" />
    </xs:complexType>
</xs:element>

    <xs:complexType name="tSwitchedContentItem">
        <xs:sequence>
            <xs:element name="ContentItemID" type="xs:string" minOccurs="1"/>
            <xs:element name="ContentItemName" type="xs:string" minOccurs="1"/>
        </xs:sequence>
    </xs:complexType>

</xs:schema>
```

Annex Y (normative): Support for an Application profile for SIP User Agents

This annex defines the normative text for a new application profile for a SIP User agent in addition to the 3 existing profiles currently defined in the SIP Config framework.

Koninklijke KPN NV - Exhibit 2010
Samsung Electronics America, Inc. et al. v. Koninklijke KPN NV PTAB-IPR2025-00502
Page 217 of 237

Y.1 Introduction

SIP User Agents require profile data to function properly. A mechanism to obtain profile data is specified by the Framework for SIP User Agent Profile Delivery [I-D.ietf-sipping-config-framework]. The framework separates profile data into three categories, termed profile types, local-network, device and user. Each profile type deals with a specific data set, e.g., the device profile type is used to obtain device-specific configuration. The framework also allows for future extensions to support additional profile types. This document specifies one such extension to support an additional profile type, application. This can be used by user agents for requesting profile data for one or more applications that they support.

Y.2 Motivation

The motivation for an independent application profile type can be demonstrated using the scenario described in Figure 1. The scenario considers a device (not shown) that supports three applications (X, Y, Z). It also considers two users (A, B). Applications X and Y are user-specific, i.e., restricted to known end-users, where as Application Z can be used by any user (e.g., Weather Information).

```
_______   _______          ________

| App X | | App Y |        | App Z  |
 _______   _______          ________
     |     |     |            |
     |     |     |        <any user>
     |     |     |
      ______      ______
     |User A|    |User B|
      ______      ______
```

Figure 1: Motivation for application profile type

Each application needs specific profile data to function. For instance, an application such as Video on Demand (VoD) would require VoD server information, codecs for rendering, minimum bandwidth requirements etc. It may also have requirements specific to users, such as rating and cost restrictions (parental controls). Further, the presence of an application does not always mean that it is enabled. For example, a Service Provider may disable VoD for certain subscription levels.

Profile data related to such applications, especially those that are unrelated to specific users, would need to be retrieved for successful operation. This profile data may be retrieved during device boot-up if it is configured to do so, e.g., via the device profile. The profile data can also be retrieved dynamically, e.g., when the application is enabled. Such profile data does not qualify under any existing profile types specified by the SIP UA configuration framework, viz., local-network, device and user. The only exception is application profile data that is specific to users, which can be provided via the user profile type. Thus the need for an additional profile type specific to applications.

Y.3 Overview

Y.3.1 Profile Type Definition

This document specifies a new profile type for use with the SIP UA configuration framework. The name of the profile type is 'application'. This document also defines an additional event header parameter for use with the application profile type. This parameter is termed "appids".

Koninklijke KPN NV - Exhibit 2010
Samsung Electronics America, Inc. et al. v. Koninklijke KPN NV PTAB-IPR2025-00502
Page 218 of 237

Y.3.2 Parameter 'appids'

The "appids" parameter describes the application profiles being requested. Its value is an identifier for the application, or a comma-separated list of such identifiers. Each application identifier is a unique value defined by the application specification, along with the profile content, and is in the form of a URI [RFC4395], preferably a URN [RFC3406]. This parameter value SHOULD be provided in the SUBSCRIBE request for the 'application' profile-type only, along with the other three parameters (vendor, model and version) specified in [I-D.ietf-sipping-config-framework]. This parameter is useful to the PDS to affect the profile provided. Behavior when the "appids" parameter is omitted is currently undefined and treated as an error. Future standards action may specify this behavior.

In the following ABNF defining the syntax, EQUAL and DQUOTE are defined in [RFC3261]:

```
appids              = "appids=" list-of-app-ids
list-of-app-ids     = DQUOTE app-id *("," app-id) DQUOTE
app-id              = 1*(subset-print-chars)
subset-print-chars= %x21 /%x23-25 / %x27-29 / %x2D-3C / %x3E-7E
                    ;All printable characters except ", =, &, *, +
                    ;comma or white-space characters.
```

The "appids" parameter appears in the Event header of the NOTIFY request to specify the actual application the NOTIFY belongs to. In the initial NOTIFY following a SUBSCRIBE, the appids parameter SHOULD list all applications obtained in the subscription, which may be a subset of the applications listed in the SUBSCRIBE. The only case in which the "appids" parameter MAY be omitted from the initial NOTIFY is when only one application was listed in the SUBSCRIBE. If the SUBSCRIBE included an "appids" parameter, the "appids" parameter of the initial NOTIFY MUST NOT list applications not present in the SUBSCRIBE. If the parameter contains a list of applications, the order in the appids parameter MUST be the same as followed in the body (see below). Subsequent NOTIFY requests on a single application subscription MAY omit the "appids", since the application context is implied by the subscription dialog.

Y.3.3 Summary of Event Header

The following are example Event headers which may occur in SUBSCRIBE requests. The examples are not intended to show complete SUBSCRIBE requests.

```
Event: ua-profile;profile-type=application;
        vendor="vendor.example.com";model="Z100";version="1.2.3"

Event: ua-profile;profile-type=application;
        vendor="vendor.example.com";model="Z100";version="1.2.3";
        appids="myapplication"

Event: ua-profile;profile-type=application;
        vendor="vendor.example.com";model="Z100";version="1.2.3";
```


Koninklijke KPN NV - Exhibit 2010
Samsung Electronics America, Inc. et al. v. Koninklijke KPN NV PTAB-IPR2025-00502
Page 219 of 237

appids="myapplication1,myapplication2,myapplication3"

The following are example Event headers which may occur in NOTIFY requests. These example headers are not intended to be complete NOTIFY requests.

Event: ua-profile;profile-type=application

Event: ua-profile;profile-type=application;appids="myapplication1"

Event: ua-profile;profile-type=application;

appids="myapplication2,myapplication3"

The table shows the use of Event header parameters in SUBSCRIBE requests for the application profile type:

profile-type || application

==========

appids || s

vendor || o

model || o

version || o

effective-by ||

m - mandatory

s - SHOULD be provided

o - optional

The table shows the use of Event header parameters in NOTIFY requests for the application profile type:

profile-type || application

==========

appids || s

vendor ||

model ||

version ||

effective-by || o

Koninklijke KPN NV - Exhibit 2010
Samsung Electronics America, Inc. et al. v. Koninklijke KPN NV PTAB-IPR2025-00502
Page 220 of 237

Y.3.4 SUBSCRIBE Bodies

This draft defines an enhancement to the [I-D.ietf-sipping-config-framework] by specifying a use for the SUBSCRIBE request body. If the appids parameter contains a single application identifier, the SUBSCRIBE message body MAY contain a single body part appropriate for the application. If the appids parameter contains a list of applications, the body of the SUBSCRIBE MAY contain a "multipart/mixed" content-type, with appropriate body parts for each of the applications for which the UA is subscribing.

The body parts MUST be in the same order in which they are listed in the "appids" parameter, and if any body parts are present, all applications must have a corresponding part, even if empty.

If present in the SUBSCRIBE request, the body SHALL be used by the application-specific PDS to tailor the NOTIFY responses to the subscribing UA for each of the applications listed. The meaning and form of the SUBSCRIBE body is specified by each application.

COMMENT: An alternative to requiring all applications to have body parts if any do, and to using "empty" parts where a body part is not needed, is to employ Content-Description to name the appid to which the part corresponds.

Y.3.5 NOTIFY Bodies

The NOTIFY message body contains a content type specific to the requested application (this type must be listed in the Accept header of the SUBSCRIBE). If the subscription is for multiple applications, the initial NOTIFY message body will contain a "multipart/mixed" content-type, and the ordering of the body-parts corresponds to the ordering of the "appids" application values.

Y.4 Example Usage

```
SUBSCRIBE sip:urn%3auuid%3a00000000-0000-1000-0000-00FF8D82EDCB
          @example.com SIP/2.0
Event: ua-profile;profile-type=application;appids="sampleapplication"
From: sip:urn%3auuid%3a00000000-0000-1000-0000-00FF8D82EDCB
        @example.com;tag=1234
To: sip:urn%3auuid%3a00000000-0000-1000-0000-00FF8D82EDCB@example.com
Call-ID: 3573853342923422@192.0.2.44
CSeq: 2131 SUBSCRIBE
Contact: sip:urn%3auuid%3a00000000-0000-1000-0000-00FF8D82EDCB
          @example.com
   ;+sip.instance="<urn:uuid:00000000-0000-0000-0000-123456789AB0>"
Via: SIP/2.0/TCP 192.0.2.41;
  branch=z9hG4bK6d6d35b6e2a203104d97211a3d18f57a
Accept: message/external-body, application/x-z100-device-profile
Content-Length: 0
```


Koninklijke KPN NV - Exhibit 2010
Samsung Electronics America, Inc. et al. v. Koninklijke KPN NV PTAB-IPR2025-00502
Page 221 of 237

Y.5 IANA Considerations

There is one consideration associated with this document.

Specifically it registers a new vendor specific profile type as specified in

[I-D.ietf-sipping-config-framework].

Profile Type	Reference
application	[ETSI183063]

Y.6 Security Considerations

This document is an extension to the SIP Configuration Framework and as such inherits the security considerations for profile delivery as listed in [I-D.ietf-sipping-config-framework]. In addition, the

presence of application ids in the SUBSCRIBE and NOTIFY bodies plays an important role in how the profile data is received by the client.

A man-in-the-middle who manipulates the application ids can effectively cause a disruption in application profile data delivery.

(Editor's note: Need to add more security considerations, e.g., when is the presence of an app-id a threat.)

Annex Z (normative): SDP attributes for IMS-based IPTV

Editor's note: These SDP attributes will require registration by IANA.

Z.1 SDP attributes for Personalized Service Composition

Z.1.1 SDP attribute for PSC identifier

The SDP attribute a=PSCid is used to signal that a particular SIP session is part of a PSC. The use of this attribute is specified in clauses 5.1.11 and 5.3.10. The Augmented Backus-Naur Form [64] specification of this SDP attribute is as follows.

"a=PSCid:" <PSCid>

<PSCid> = *(%x21-7E); Zero or more of any printable character, except for "space".

The following is an example of the SDP attribute for PSC identifier.

- a=PSCid:MyPersonalisedServiceComposite12345<>[[[-+!@#$%^&*()

NOTE: As specified in ABNF above, the attribute parameter of a=PSCid is case-sensitive. So "a=PSCid:case" is different from "a=PSCid:CASE"

Koninklijke KPN NV - Exhibit 2010
Samsung Electronics America, Inc. et al. v. Koninklijke KPN NV PTAB-IPR2025-00502
Page 222 of 237

Z.2 SDP attributes for BC

Z.2.1 SDP attributes for BC Service

The SDP attribute a=bc_service is used to signal the BCServiceId (channel).The use of this attribute is specified in clauses 5.1.3 and 5.3.1. The Augmented Backus-Naur Form [64] specification of this SDP attribute is as follows.

"a=bc_service:" <BCServiceId>

<BCServiceId> = *16(%x21-7E); Zero up to 16 printable character, except for "space".

The following is an example of the SDP attribute for BC service identifier.

- a=bc_service:CCTV-5-Sports

Z.2.2 SDP attributes for BC Service Package

The format of the a=bc_service_package attribute shall be the following:

"a= bc_service_package:" <BCPackageId> [<mult_list> [<bc_tv_service_id_list>]]

where:

<mult_list>= mult_list:<source_unit>("/"<source_unit>)

<source_unit>= [src_list:("<src-list>"),"] <multicast_address> ((," /"-")<multicast_address>)

<src-list>= <source_address>{(," / "-")<source_address>}

<source_address>= IPv4address / IPv6address

<multicast_address>= IPv4address / IPv6address

<bc_tv_service_id_list>=<BCServiceId> {," < BCServiceId>}

IPv4 address and IPv6 address are specified in RFC 3261, section 25 [65].

NOTE: An essential correction to the ABNF of IPv6address is proposed in [i.11i.11~~i.11~~]. Implementers are advised to follow that guideline.

<BCServiceId > is the BC Service ID string defined in annex N.2.1 (BNF notation).

<BCPackageId> is the service package ID string.

<BCPackageId> = *16(%x21-7E); Zero up to 16 printable character, except for "space".

The following is an example of the SDP attribute for BC service identifier.

- a=bc_BCPackageId:P25-News-Sports

As seen in this notation the multi_list parameter can contain one or more source_unit parameters with multicast addresses that can be separated with either "," or "-". When they are separated with "-" it means that it is a range of addresses. In addition there can optionally be a list of source addresses within the source unit parameter which is applicable for all the multicast addresses within the source unit parameter.

Z.2.3 SDP attributes for BC Program

The SDP attribute a=bc_program is used to signal the BC program ID. The use of this attribute is specified in clauses 5.1.3 and 5.3.1. The Augmented Backus-Naur Form [64] specification of this SDP attribute is as follows.

"a=bc_program:"<BCprogramId>

Koninklijke KPN NV - Exhibit 2010
Samsung Electronics America, Inc. et al. v. Koninklijke KPN NV PTAB-IPR2025-00502
Page 223 of 237

<BCprogramId> = *256(%x21-7E); Zero up to 256 printable character, except for "space".

The following is an example of the SDP attribute for BC program identifier.

a=bc_program:USA-Movie-Superman

Annex ZA (normative): Definition of Info Packages

This annex defines the Info packages required in support of IPTV

ZA.1 Playlist Info Package

The Playlist Info Package is used to send a list of network-owned content to any application that requires it using SIP INFO requests. The content is transparent to the end user in the sense that the user cannot perform any trick-mode operations on any content in the playlist

ZA.1.1 Overall General

This subclause contains the information required for the IANA registration of an Info Package.

ZA.1.2 Overall Description

Playlist are normally sent by a network-owned control server to a streaming server during an established session with the streaming server. The playlist includes a list of content allowing the streaming server to stream the content to an end-user according to the indicated time per content. The Playlist Info Package is used to transport the necessary information regarding the content to be streamed to the end-user.

The Playlist Info Package is used to transfer a single list at any time. As such, only one list is transported in a single SIP INFO request. The list can include multiple contents.

The Playlist Info Package is defined for any multimedia application that incorporates content streaming. Any application, where sending a playlist using the SIP INFO method is required, can use the Playlist Info Package.

ZA.1.3 Applicability

The Info Package mechanism for transporting a list of content has been chosen since this is a service that some networks may offer, and as such it is optional. The mechanism also allows the list of content to be sent inside an existing dialog, using the same signalling path as other SIP messages within the dialog, rather than having to establish a separate dialog. This is especially important since the playlist is only pertinent to the sessioZA.

ZA.1.4 Info Package Name

The name of the content bookmark Info Package is: Playlist

ZA.1.5 Info Package Parameters

No parameters are defined for the Playlist Info Package.

ZA.1.6 SIP Option Tags

No SIP option tags are defined for the Playlist Info Package.

Koninklijke KPN NV - Exhibit 2010
Samsung Electronics America, Inc. et al. v. Koninklijke KPN NV PTAB-IPR2025-00502
Page 224 of 237

ZA.1.7 INFO Message Body Parts

ZA.1.7.1 General

The playlist sent as part of the message body of the SIP INFO request. This subclause defines the information and syntax associated with the message body part used for transporting the play list.

ZA.1.7.2 SIP Content-Type header field value

The value of the SIP Content-Type header field associated with the Playlist Info Package message body is: *application/playlist*

ZA.1.7.3 SIP Content-Disposition header field value

The value of the SIP Content-Disposition header field associated with the Playlist Info Package message body is: Info-Package.

ZA.1.7.4 Message body syntax

The syntax of the Playlist Info Package message body is based on the rules defined in section 5.3.9.1

ZA.1.8 Info Package Usage Restrictions

No usage restrictions are defined for the Playlist Info Package.

ZA.1.9 Rate of INFO Requests

No maximum rate or minimum rate is defined for sending INFO requests associated with the Playlist Info Package.

When Playlist requests are generated, the package does not provide a feedback mechanism to indicate to the sender that the rate of Playlist generation is too slow or fast. However applications in the network can control the rate of generation from users if they so desire.

ZA.1.10 Info Package Security Considerations

No additional security mechanism is defined for the Playlist Info Package.

The security of the Playlist Info Package is based on the generic security mechanism provided for the underlying SIP signalling.

ZA.1.11 Implementation Details and Examples

Examples of the Playlist Info Package usage can be found in Clause 5.3.9.

ZA.2 Restricted-Trickplay-Policies Info Package

The Restricted-Trickplay-Policies Info Package is used to send to a streaming server or an end-user streaming application a list of policies regarding trickplay restrictions on a streamed content that a user cannot perform using SIP INFO requests

ZA.2.1 Overall General

This subclause contains the information required for the IANA registration of an Info Package.

Koninklijke KPN NV - Exhibit 2010
Samsung Electronics America, Inc. et al. v. Koninklijke KPN NV PTAB-IPR2025-00502
Page 225 of 237

ZA.2.2 Overall Description

Restricted-Trickplay-Policies Playlist is normally sent by a control server to a streaming server or an end-user streaming application during an established session with the streaming server. This allows the server to enforce polices in regard trick plays that could not be performed over some segment of the content while the content is being streamed. This is useful if certain content segments such as ads should not be skipped as an example. The Restricted-Trickplay-Policies Info Package is used to transport the necessary information regarding those policies.

The Restricted-Trickplay-Policies Info Package is used to transfer a single list at any time. As such, only one list is transported in a single SIP INFO request. The list can include multiple policies.

The Restricted-Trickplay-Policies Info Package is defined for any multimedia application that incorporates content streaming and that wishes to impose restrictions on trickplays while streaming the content. Any application, where sending restricted trickplay policies using the SIP INFO method is required, can use the Restricted-Trickplay-Policies Info Package.

ZA.2.3 Applicability

The Info Package mechanism for transporting a list of Restricted trickplay policies has been chosen since this is a service that some networks may offer, and as such it is optional. The mechanism also allows the list of policies to be sent inside an existing dialog, using the same signalling path as other SIP messages within the dialog, rather than having to establish a separate dialog. This is especially important since the policies are only pertinent to the session and the content streamed thereiZA.

ZA.2.4 Info Package Name

The name of the Info Package is: Restricted-Trickplay-Policies

ZA.2.5 Info Package Parameters

No parameters are defined for the Restricted-Trickplay-Policies Info Package.

ZA.2.6 SIP Option Tags

No SIP option tags are defined for the Restricted-Trickplay-Policies Info Package.

ZA.2.7 INFO Message Body Parts

ZA.1.7.1 General

The trickplay restricted policies are sent as part of the message body of the SIP INFO request. This subclause defines the information and syntax associated with the message body part used for transporting the policies.

ZA.2.7.2 SIP Content-Type header field value

The value of the SIP Content-Type header field associated with the Restricted-Trickplay-Policies Info Package message body is: “application/vnd.etsi.iptvrestrictedtrickplay+xml”

ZA.2.7.3 SIP Content-Disposition header field value

The value of the SIP Content-Disposition header field associated with the Restricted-Trickplay-Policies Info Package message body is: Info-Package.

Koninklijke KPN NV - Exhibit 2010
Samsung Electronics America, Inc. et al. v. Koninklijke KPN NV PTAB-IPR2025-00502
Page 226 of 237

ZA.2.7.4 Message body syntax

The syntax of the Restricted-Trickplay-Policies Info Package message body is based on the rules defined in section 5.3.7

ZA.2.8 Info Package Usage Restrictions

No usage restrictions are defined for the Restricted-Trickplay-Policies Info Package.

ZA.2.9 Rate of INFO Requests

No maximum rate or minimum rate is defined for sending INFO requests associated with the Restricted-Trickplay-Policies Info Package.

ZA.2.10 Info Package Security Considerations

No additional security mechanism is defined for the Restricted-Trickplay-Policies Info Package.

The security of the Restricted-Trickplay-Policies Info Package is based on the generic security mechanism provided for the underlying SIP signalling.

ZA.2.11 Implementation Details and Examples

Examples of the Restricted-Trickplay-Policies Info Package usage can be found in Clauses 5.3.7 & 5.4.6.

ZA.3 IPTV-Content-Marker Info Package

The IPTV-Content-Marker Info Package is used to send a content bookmark to any application that requires it using SIP INFO requests

ZA.3.1 Overall General

This subclause contains the information required for the IANA registration of an Info Package.

ZA.3.2 Overall Description

IPTV Content Markers are normally sent by a user while watching content when a user desires to store information regarding a position in time in the streamed content that he wants to locate later when viewing the same content. The bookmarked position allows the user to start viewing from the bookmarked positioZA. The IPTV-Content-Marker Info Package is used to transport the necessary information regarding that point in time for storage in the network. Information regarding the stored content bookmark can be later retrieved by the user.

The IPTV-Content-Marker Info Package is used to transfer a single content bookmark at any time. As such, only one content bookmark is transported in a single SIP INFO request,

The IPTV-Content-Marker Info Package is defined for any multimedia application that incorporates content streaming. Any application, where sending content bookmark information using the SIP INFO method is required, can use the IPTV-Content-Marker Info Package.

ZA.3.3 Applicability

The Info Package mechanism for transporting content bookmarks has been chosen since this is a service that some networks may offer, and as such it is optional. Also networks that offer the service may impose a limit on the number of content bookmarks per subscriber to be stored in the network. As such, the network would restrict users who have exceeded their quota from sending any more bookmarks to it. Finally, the mechanism also allows content bookmarks to

Koninklijke KPN NV - Exhibit 2010
Samsung Electronics America, Inc. et al. v. Koninklijke KPN NV PTAB-IPR2025-00502
Page 227 of 237

be sent inside an existing dialog, using the same signalling path as other SIP messages within the dialog, rather than having to establish a separate dialog.

ZA.3.4 Info Package Name

The name of the content bookmark Info Package is: IPTV-Content-Marker

ZA.3.5 Info Package Parameters

No parameters are defined for the IPTV-Content-Marker Info Package.

ZA.3.6 SIP Option Tags

No SIP option tags are defined for the IPTV-Content-Marker Info Package.

ZA.3.7 INFO Message Body Parts

ZA.3.7.1 General

The Content bookmarks are sent as part of the message body of the SIP INFO request. This subclause defines the information and syntax associated with the message body part used for transporting the content bookmarks.

ZA.3.7.2 SIP Content-Type header field value

The value of the SIP Content-Type header field associated with the IPTV-Content-Marker Info Package message body is: "application/vnd.etsi.iptvcontentmarker+xml"

ZA.3.7.3 SIP Content-Disposition header field value

The value of the SIP Content-Disposition header field associated with the IPTV-Content-Marker Info Package message body is: Info-Package.

ZA.3.7.4 Message body syntax

The syntax of the IPTV-Content-Marker Info Package message body is based on the rules defined in section 5.1.14 & 5.3.13.

ZA.3.8 Info Package Usage Restrictions

No usage restrictions are defined for the IPTV-Content-Marker Info Package.

ZA.3.9 Rate of INFO Requests

No maximum rate or minimum rate is defined for sending INFO requests associated with the IPTV-Content-Marker Info Package.

When IPTV-Content-Marker requests are generated by users, the package does not provide a feedback mechanism to indicate to the sender that the rate of IPTV-Content-Marker generation is too slow or fast. However applications in the network can control the rate of generation from users if they so desire.

ZA.3.10 Info Package Security Considerations

No additional security mechanism is defined for the IPTV-Content-Marker Info Package.

Koninklijke KPN NV - Exhibit 2010
Samsung Electronics America, Inc. et al. v. Koninklijke KPN NV PTAB-IPR2025-00502
Page 228 of 237

The security of the IPTV-Content-Marker Info Package is based on the generic security mechanism provided for the underlying SIP signalling.

ZA.3.11 Implementation Details and Examples

Examples of the IPTV-Content-Marker Info Package usage can be found in Clause 5.1.14.

ZA.4 Event-Notification Info Package

The Event-Notification Info Package is used to send to an application unsolicited application events that the applications is required to act on using SIP INFO requests

ZA.4.1 Overall General

This subclause contains the information required for the IANA registration of an Info Package.

ZA.4.2 Overall Description

Notifications about events are normally sent when an action is required by an application such as inserting an ad to a user who has paused a streamed content. In these cases, the reason for the event is signalled in the event itself so the application knows what it needs to do.

The Event-Notification Info Package is used to transfer a single event at any time. As such, only one event is transported in a single SIP INFO request.

The Event-Notification Info Package is defined for any multimedia application that incorporates content streaming. Any application, where sending events using the SIP INFO method is required, can use the Event-Notification Info Package.

ZA.4.3 Applicability

The Info Package mechanism for transporting application events has been chosen since this is a service that not all applications may support, and as such it is optional. Finally, the mechanism also allows application events to be sent inside an existing dialog, using the same signalling path as other SIP messages within the dialog, rather than having to establish a separate dialog.

ZA.4.4 Info Package Name

The name of the event notification Info Package is: Event-Notification

ZA.4.5 Info Package Parameters

No parameters are defined for the Event-Notification Info Package.

ZA.4.6 SIP Option Tags

No SIP option tags are defined for the Event-Notification Info Package.

ZA.4.7 INFO Message Body Parts

ZA.4.7.1 General

Notification events are sent as part of the message body of the SIP INFO request. This subclause defines the information and syntax associated with the message body part used for transporting the notification events.

Koninklijke KPN NV - Exhibit 2010
Samsung Electronics America, Inc. et al. v. Koninklijke KPN NV PTAB-IPR2025-00502
Page 229 of 237

ZA.4.7.2 SIP Content-Type header field value

The value of the SIP Content-Type header field associated with the Event-Notification Info Package message body is: " application/vnd.etsi.iptvnotification+xml "

ZA.4.7.3 SIP Content-Disposition header field value

The value of the SIP Content-Disposition header field associated with the Event-Notification Info Package message body is: Info-Package.

ZA.4.7.4 Message body syntax

The syntax of the Event-Notification Info Package message body is based on the rules defined in section 5.1.13

ZA.4.8 Info Package Usage Restrictions

No usage restrictions are defined for the Event-Notification Info Package.

ZA.4.9 Rate of INFO Requests

No maximum rate or minimum rate is defined for sending INFO requests associated with the Event-Notification Info Package. Given that these events are typically generated by network servers, the network can control the rate itself if need be

ZA.4.10 Info Package Security Considerations

No additional security mechanism is defined for the Event-Notification Info Package.

The security of the Event-Notification Info Package is based on the generic security mechanism provided for the underlying SIP signalling.

ZA.4.11 Implementation Details and Examples

Examples of the Event-Notification Info Package usage can be found in Clause 5.1.13.

ZA.5 CoD-Playlist Info Package

The CoD-Playlist Info Package is used to send to a streaming server a list of content held by the server using SIP INFO requests. This allows the server to sequentially stream the list of content to an end user.

ZA.5.1 Overall General

This subclause contains the information required for the IANA registration of an Info Package.

ZA.5.2 Overall Description

Cod-Playlist is normally sent by a user to a streaming server once a session is established with the server. The CoD playlist includes a list of content allowing the streaming server to stream the content to an end-user sequentially. The user can equally switch streaming between the different contents in the playlist. CoD play lists are typically created and updated by the end-user.

The CoD-Playlist Info Package is used to transfer a single list at any time. As such, only one list is transported in a single SIP INFO request. The list can include multiple contents.

Koninklijke KPN NV - Exhibit 2010
Samsung Electronics America, Inc. et al. v. Koninklijke KPN NV PTAB-IPR2025-00502
Page 230 of 237

The CoD-Playlist Info Package is defined for any multimedia application that incorporates content streaming. Any application, where sending a playlist using the SIP INFO method is required, can use the Playlist Info Package.

ZA.5.3 Applicability

The Info Package mechanism for transporting the CoD list of content has been chosen since this is a service that some networks may offer, and as such it is optional. The mechanism also allows the list of content to be sent inside an existing dialog, using the same signalling path as other SIP messages within the dialog, rather than having to establish a separate dialog. This is especially important since the playlist is only pertinent to the sessioZA.

ZA.5.4 Info Package Name

The name of the content bookmark Info Package is: CoD-Playlist

ZA.5.5 Info Package Parameters

No parameters are defined for the CoD-Playlist Info Package.

ZA.5.6 SIP Option Tags

No SIP option tags are defined for the CoD-Playlist Info Package.

ZA.5.7 INFO Message Body Parts

ZA.5.7.1 General

The CoD playlist is sent as part of the message body of the SIP INFO request. This subclause defines the information and syntax associated with the message body part used for transporting the CoD-Playlist.

ZA.5.7.2 SIP Content-Type header field value

The value of the SIP Content-Type header field associated with the CoD-Playlist Info Package message body is: "application/vnd.etsi.iptvcontentswitch+xml"

ZA.5.7.3 SIP Content-Disposition header field value

The value of the SIP Content-Disposition header field associated with the CoD-Playlist Info Package message body is: Info-Package.

ZA.5.7.4 Message body syntax

The syntax of the CoD-Playlist Info Package message body is based on the rules defined in section 5.3.15.2

ZA.5.8 Info Package Usage Restrictions

No usage restrictions are defined for the CoD-Playlist Info Package.

ZA.5.9 Rate of INFO Requests

No maximum rate or minimum rate is defined for sending INFO requests associated with the CoD-Playlist Info Package.

Koninklijke KPN NV - Exhibit 2010
Samsung Electronics America, Inc. et al. v. Koninklijke KPN NV PTAB-IPR2025-00502
Page 231 of 237

ZA.5.10 Info Package Security Considerations

No additional security mechanism is defined for the CoD-Playlist Info Package.

The security of the CoD-Playlist Info Package is based on the generic security mechanism provided for the underlying SIP signalling.

ZA.5.11 Implementation Details and Examples

Examples of the CoD-Playlist Info Package usage can be found in Clause 5.3.9.

Koninklijke KPN NV - Exhibit 2010
Samsung Electronics America, Inc. et al. v. Koninklijke KPN NV PTAB-IPR2025-00502
Page 232 of 237

Annex ZZZ (informative): Change history

Date	WG Doc.	CR	CRRev	CAT	Title/Comment	Current Version	New Version
19-05-09	20bTD115r1	001		D	Outline for IPTV Stage3 Procedures	2.4.1	3.0.0
11-06-09	21WTD129r1	002		D	WI3204_Editorial_Corrections	3.0.0	3.0.1
11-06-09	21WTD210r5	003		B	CPVR Service procedures	3.0.0	3.0.1
11-06-09	21WTD211r2	004		B	WI3204_PPV_Service	3.0.0	3.0.1
11-06-09	21WTD212r3	005		B	WI3204_Procedures_of_UGC_Service	3.0.0	3.0.1
					CRs001 to 005 TB approved	3.0.1	3.1.0
31-08-09	21bTD112r1	006		B	Restricted Trick Play service procedures	3.1.0	3.1.1
31-08-09	21bTD103r2	007		B	SCF Initiate Sessions	3.1.0	3.1.1
31-08-09	21bTD114r2	008		B	Procedures_for_Service_Initiation_by_Remote UE	3.1.0	3.1.1
31-08-09	21bTD109r3	009		B	Playlist Procedures	3.1.0	3.1.1
31-08-09	21bTD110r5	010		B	Notification service	3.1.0	3.1.1
31-08-09	21bTD104r1	011		B	Personalised Service Composition	3.1.0	3.1.1
31-08-09	21bTD115r6	012		B	Procedure_for_Retrieving_User's_IPTV_Service_Access	3.1.0	3.1.1
31-08-09	21bTD099r4	013		B	Applicability_of_Synchronization	3.1.0	3.1.1
31-08-09	21bTD113r6	014		B	Protocol_Implementation_for_PCh_Service	3.1.0	3.1.1
31-08-09	21bTD196r4	015		B	Content Inserton At UE Side	3.1.0	3.1.1
31-08-09	21bTD154r5	016		B	Procedures for IPTV Content Marker	3.1.0	3.1.1
31-08-09	21bTD111r3	017		B	Ad_Service_Procedures-TISPAN_Option	3.1.0	3.1.1
01-10-09	22WTD196r1	018		A	XML Corrections	3.1.1	3.1.2
01-10-09	22WTD040r1	019		B	Procedures for UE watching	3.1.1	3.1.2
01-10-09	22WTD077r1	020		B	XML Sheama definition for PCh Procedures	3.1.1	3.1.2
01-10-09	22WTD074r3	021		B	Procedures_for_CPVR_Recording_Session	3.1.1	3.1.2
01-10-09	22WTD136r3	022		B	Introduction of Instance Identifier	3.1.1	3.1.2
01-10-09	22WTD038r2	023		B	RTCP_for_Synchronization	3.1.1	3.1.2
01-10-09	22WTD036r4	024		B	Synchronization_Example_Signalling_Flows	3.1.1	3.1.2
01-10-09	22WTD037r3	025		B	Synchronization_Session_Setup	3.1.1	3.1.2
01-10-09	22WTD150r2	026		B	Introduction of TV Anytime Phase 2 as SSF technology	3.1.1	3.1.2
01-10-09	22WTD041r3	027		B	Presence_for_Service_State_Data	3.1.1	3.1.2
01-10-09	22WTD076r4	028		B	Content Switch within the COD playlist	3.1.1	3.1.2
01-10-09	22WTD078r3	029		B	XML_Schema_Definition_for_UGC_Procedures	3.1.1	3.1.2
01-10-09	22WTD151r2	030		B	Playlist proceduires	3.1.1	3.1.2
01-10-09	22WTD069r4	031		B	Improvement on the XML schema for IPTV notification service	3.1.1	3.1.2
01-10-09	22WTD138r5	032		B	UE Notification Procedures	3.1.1	3.1.2
01-10-09	22WTD137r2	033		B	Mandating ICSI for IPTV	3.1.1	3.1.2
01-10-09	22WTD070r4	034		B	Content Insertion at MF Side	3.1.1	3.1.2
01-10-09	22WTD152r2	035		B	IPTV Content Marker Procedures	3.1.1	3.1.2
01-10-09	22WTD183r3	036		C	Move TAI procedures	3.1.1	3.1.2
					CRs 006 to 036 TB approved at TISPAN#22	3.1.2	3.2.0
11-11-09	22bTD074r1	037		D	Editorial modifications	3.2.0	3.2.1
11-11-09	22bTD068r1	038		B	Content Recommendation	3.2.0	3.2.1
11-11-09	22bTD150r1	039		F	Conplience to SIP drafting Rules	3.2.0	3.2.1
11-11-09	22bTD069r1	040		C	Improve the PCh Schema	3.2.0	3.2.1
11-11-09	22bTD089r3	041		B	Control of Content Reporting	3.2.0	3.2.1
11-11-09	22bTD073r4	042		B	UE initiated Content Download	3.2.0	3.2.1
11-11-09	22bTD072r2	043		B	TAI at MF Side	3.2.0	3.2.1
11-11-09	22bTD051r1	044		F	Correction_Sync_for_RTSP_Method_2	3.2.0	3.2.1
11-11-09	22bTD047r1	045		B	Synchronisation_Clients_in_the_Transport_Network	3.2.0	3.2.1
11-11-09	22bTD048r1	046		B	Direct_Synchronisation_between_UEs	3.2.0	3.2.1
11-11-09	22bTD050r1	047		B	RTCP_XR_Block_Type_for_Synchronization	3.2.0	3.2.1
11-11-09	22bTD071r5	048		B	Resolve_Editors_Note_for_Content_Switch	3.2.0	3.2.1
11-11-09	22bTD136r2	049		B	Completion of TV Anytime Phase 2 parts	3.2.0	3.2.1

Koninklijke KPN NV - Exhibit 2010
Samsung Electronics America, Inc. et al. v. Koninklijke KPN NV PTAB-IPR2025-00502
Page 233 of 237

11-11-09	22bTD187r4	050		B	Procedure for Preview Service	3.2.0	3.2.1
12-25-09	23WTD056r1	051		B	Direct Synchronization between UEs	3.2.1	3.2.2
12-25-09	23WTD057r1	052		B	Synchronization clients for Transcoders	3.2.1	3.2.2
12-25-09	23WTD058r1	053		B	Annex W RTCP Block Type	3.2.1	3.2.2
12-25-09	23WTD073r1	054		D	Delete ther Editor's Notes for UGC Upload	3.2.1	3.2.2
12-25-09	23WTD079r1	055		B	Resolving Editor's notes for PPV	3.2.1	3.2.2
12-25-09	23WTD082r1	056		B	Resolving Editor's notes for Content switch	3.2.1	3.2.2
12-25-09	23WTD083r1	057		B	Remove Annex ZZZ	3.2.1	3.2.2
12-25-09	23WTD140r1	058		B	XML Scheme for the IPTV Profile	3.2.1	3.2.2
12-25-09	23WTD078r1	059		B	EN_handling for Preview	3.2.1	3.2.2
12-25-09	23WTD077r4	060		B	EN Handling for PCh	3.2.1	3.2.2
12-25-09	23WTD072r3	061		B	Binding_Request_and_Response_for_UGC_Declaration	3.2.1	3.2.2
12-25-09	23WTD074r2	062		B	Disposal of Editor's Notes of Remote Service Initiation	3.2.1	3.2.2
12-25-09	23WTD075r3	063		B	Disposal of Editor's Notes for UGC service	3.2.1	3.2.2
12-25-09	23WTD080r2	064		B	Resolving Editor's Notes for presence	3.2.1	3.2.2
12-25-09	23WTD081r2	065		B	Resolving Editor's Notes for Content Download	3.2.1	3.2.2
12-25-09	23WTD076r4	066		B	EN_Handling for Ad	3.2.1	3.2.2
					CRs 037 to 066 TB approved at TISPAN#23	3.2.2	3.3.0
02-17-10	TISPAN03(10)0012r1	067		B	Removal of editor's notes on Sync	3.3.0	3.3.1
02-17-10	TISPAN03(10)0014r1	068		B	Synchronization scalability	3.3.0	3.3.1
02-17-10	TISPAN03(10)0015r1	069		B	Distribution_of_Synchronisation_Client_Functionalities	3.3.0	3.3.1
02-17-10	TISPAN03(10)0023r2	070		B	Clarification_and_Resolve_Editor's_Note_for_CPVR_Service	3.3.0	3.3.1
02-17-10	TISPAN03(10)0030r1	071		B	PCh_Name_Change	3.3.0	3.3.1
02-17-10	TISPAN03(10)0031r4	072		B	PCh_Overlap Handling	3.3.0	3.3.1
02-17-10	TISPAN03(10)0032r3	073		B	PCh_Initialization	3.3.0	3.3.1
02-17-10	TISPAN03(10)0033r2	074		B	Playlist handling	3.3.0	3.3.1
02-17-10	TISPAN03(10)0034r3	075		B	Restricted Trick Play	3.3.0	3.3.1
02-17-10	TISPAN03(10)0037r4	076		B	Access Control in Content Marker procedure	3.3.0	3.3.1
02-17-10	TISPAN03(10)0047r3	077		B	IPTV Security	3.3.0	3.3.1
02-17-10	TISPAN03(10)0048r2	078		B	Ss' Reference Point	3.3.0	3.3.1
02-17-10	TISPAN03(10)0049r2	079		B	Signalling Flows	3.3.0	3.3.1
02-17-10	TISPAN03(10)0017r1	080		B	Content_Insertion_at_the_UE	3.3.0	3.3.1
02-17-10	TISPAN03(10)0025r2	081		B	Session_Transfer_Push_Mode	3.3.0	3.3.1
02-17-10	TISPAN03(10)0016r1	082		B	Personalized_Service_Composition_for_Content_Insertion	3.3.0	3.3.1
02-17-10	TISPAN03(10)0026r2	083		B	Content_Insertion_MFside	3.3.0	3.3.1
02-17-10	TISPAN03(10)0027r1	084		B	Content_Insertion_UEside	3.3.0	3.3.1
02-17-10	TISPAN03(10)0028r1	085		B	Content_Insertion_Overloading_Invite	3.3.0	3.3.1
02-17-10	TISPAN03(10)0038r4	086		B	Some Modifications about IPTV Content Marker	3.3.0	3.3.1
02-17-10	TISPAN03(10)0013r3	087		B	Clarification_on_Optionality_of_Functionalities	3.3.0	3.3.1
04-27-10	TISPAN03(10)0084r2	088		C	WI-03204 Changes to the Output draft at version .3.1	3.3.1	3.3.2
04-27-10	TISPAN03(10)	089		B	WI-03204 Example of session Transfer	3.3.1	3.3.2

Koninklijke KPN NV - Exhibit 2010
Samsung Electronics America, Inc. et al. v. Koninklijke KPN NV PTAB-IPR2025-00502
Page 234 of 237

	0085r3						
04-27-10	TISPAN03(10)0087r1	090		B	WI-03204 Inconsistencies in Content Switch Specifications	3.3.1	3.3.2
04-27-10	TISPAN03(10)0088r2	091		B	WI-03204 Inconsistencies in Playlist Specifications	3.3.1	3.3.2
04-27-10	TISPAN03(10)0089r2	092		B	WI-03204 PCh declaration	3.3.1	3.3.2
04-27-10	TISPAN03(10)0090r2	093		B	WI-03204 Removal of Editor's note 5.1.4.2A	3.3.1	3.3.2
04-27-10	TISPAN03(10)0091r1	094		B	WI-03204 Removal of Editor's note 5.3.12.2	3.3.1	3.3.2
04-27-10	TISPAN03(10)0092r2	095		B	WI-03204 Removal of Editor's note 5.4.9.1.2	3.3.1	3.3.2
04-27-10	TISPAN03(10)0093r1	096		B	WI-03204 SIP Instance Correction	3.3.1	3.3.2
04-27-10	TISPAN03(10)0094r1	097		B	WI-03204 Support for GRUU	3.3.1	3.3.2
04-27-10	TISPAN03(10)0095r1	098		B	WI-03204 Support For GRUU In Session Transfer Service	3.3.1	3.3.2
04-27-10	TISPAN03(10)0096r3	099		B	WI-03204 Support For t=line in Network Time Shift	3.3.1	3.3.2
04-27-10	TISPAN03(10)0097r2	100		B	WI-03204 using SIP Options in SCF initiated Session	3.3.1	3.3.2
04-27-10	TISPAN03(10)0100r1	101		C	WI-03204 Resolution of Editor's notes	3.3.1	3.3.2
04-27-10	TISPAN03(10)0101r1	102		D	WI-03204 Removal of SDES references	3.3.1	3.3.2
04-27-10	TISPAN03(10)0102r4	103		F	WI-03204 Clarification of Content Insertion at UE	3.3.1	3.3.2
04-27-10	TISPAN03(10)0103r1	104		F	WI-03204 review of TS 183 063 Draft Synchronization CR	3.3.1	3.3.2
04-27-10	TISPAN03(10)0140r1	105		F	WI-03204 Non synchronization CR	3.3.1	3.3.2
04-27-10	TISPAN03(10)0104r1	106		C	WI-03204 Definition of SDP Attribute Parameter for Sync	3.3.1	3.3.2
04-27-10	TISPAN03(10)0130r1	107		A	WI-03204: Addressing Editor's Note 42	3.3.1	3.3.2
04-27-10	TISPAN03(10)0116r1	108		D	WI-03204 Inter UE Session Transfer	3.3.1	3.3.2
04-27-10	TISPAN03(10)0117r1	109		C	WI-03204 Content Marker Service	3.3.1	3.3.2
04-27-10	TISPAN03(10)0118r1	110		F	WI-03204 BC Bookmark	3.3.1	3.3.2
04-27-10	TISPAN03(10)0125r2	111		F	WI-03204 UE Profile (XML modifications)	3.3.1	3.3.2
04-27-10	TISPAN03(10)0126r1	112		B	WI-03204 UE Profile (Content Protection)	3.3.1	3.3.2
04-27-10	TISPAN03(10)0099r3	113		F	WI-03204_Improve_TAI_Clauses	3.3.1	3.3.2
04-27-10	TISPAN03(10)0113r3	114		B	WI-03204 Bandwidth reservation for progressive download	3.3.1	3.3.2
04-27-10	TISPAN03(10)0128r2	115		B	WI-03204 FLUTE for multicast download	3.3.1	3.3.2
					CRs 067 to 0115 TB approved at TISPAN#24	3.3.2	3.4.0
06-09-10	TISPAN03(10)0190r1	116		F	WI3204 tCodDeliveryStatus parameter in the Annex K	3.4.0	3.4.1
06-09-10	TISPAN03(10)0191r1	117		F	RTSP Playback Control parameters	3.4.0	3.4.1
06-09-10	TISPAN03(10)0193r2	118		B	WI 3204 - Inclusion of Compliance to SIP INFO framework	3.4.0	3.4.1
06-09-10	TISPAN03(10)0197r1	119		B	Enhancement to Notification Service	3.4.0	3.4.1
06-09-10	TISPAN03(10)0198r4	120		B	Enhancements to RTSP ANNOUNCE For Media Events	3.4.0	3.4.1
06-09-10	TISPAN03(10)0195r2	121		B	Support For Content Switch	3.4.0	3.4.1
09-15-10	TISPAN03(10)	122		F	Rapporteur changes	3.4.1	3.4.2

Koninklijke KPN NV - Exhibit 2010
Samsung Electronics America, Inc. et al. v. Koninklijke KPN NV PTAB-IPR2025-00502
Page 235 of 237

	0211r2						
09-15-10	TISPAN03(10)0236r1	123		A	New Normative Annex to replace draft-channabasappa-sipping-app-profile-type-03	3.4.1	3.4.2
09-15-10	TISPAN03(10)0214r2	124		D	IANA_specification_of_SDP_attributes	3.4.1	3.4.2
09-15-10	TISPAN03(10)0235r1	125		B	Info Packages	3.4.1	3.4.2
09-15-10	TISPAN03(10)0237r1	126		B	Generic Handling of Play lists, Cod Content lists and Personalized Channel	3.4.1	3.4.2

Koninklijke KPN NV - Exhibit 2010
Samsung Electronics America, Inc. et al. v. Koninklijke KPN NV PTAB-IPR2025-00502
Page 236 of 237

History

Document history		
V2.1.0	June 2008	Publication
V2.4.1	May 2009	Publication
V3.0.0	May 2009	20bis output draft.
V3.0.1	Jun 2009	21WG output draft.
V3.1.0	July 2009	CRs 001 to 005 TB approved
V3.1.1	Aug 2009	21bis output draft.
V3.1.2	Oct. 2009	22WG output draft.
V3.2.0	October 2009	CRs 006 to 036 TB approved at TISPAN#22
V3.2.1	Nov. 2009	22Bis output draft.
V3.2.2	Dec. 2009	23WG output draft.
V3.3.0	Jan. 2010	CRs TB approved at TISPAN#23
V3.3.1	Feb. 2010	23bis output draft.
V3.3.2	April. 2010	24WG output draft.
V3.4.1	June. 2010	24WGbis output draft.
V3.4.2	Sep. 2010	25WGter output draft.

Koninklijke KPN NV - Exhibit 2010
Samsung Electronics America, Inc. et al. v. Koninklijke KPN NV PTAB-IPR2025-00502
Page 237 of 237