[redacted]

IN THE UNITED STATES DISTRICT COURT
FOR THE EASTERN DISTRICT OF TEXAS

KONINKLIJKE KPN N.V., Plaintiff, v. TELEFONAKTIEBOLAGET LM ERICSSON and ERICSSON INC., Defendants.	C.A. No. 2:22-cv-282-JRG **JURY TRIAL DEMANDED** [redacted]

AMENDED COMPLAINT FOR PATENT INFRINGEMENT

This is an action for patent infringement in which Plaintiff Koninklijke KPN N.V. ("KPN") makes the following allegations against Telefonaktiebolaget LM Ericsson ("LM Ericsson") and Ericsson Inc. ("Ericsson USA") (collectively, "Ericsson").

BACKGROUND

1. KPN's extensive research and development efforts have led to hundreds of issued patents in the United States and across the world, which KPN has licensed to many leading global telecommunications companies. These include many of Ericsson's competitors, including [redacted], each of which has licensed one or more of United States Patent Nos. 7,092,705 B2; 8,660,560 B2; 8,886,772 B2; 9,372,098 B2; and 10,924,500 B2 (collectively, the "Asserted Patents").

2. KPN also has made some of its patents available for license both through bilateral negotiations and through joint licensing or patent pool licensing arrangements, including through agreements with at least Avanci, Sisvel, and Via Licensing.

3. [redacted].

EX. 2113
Samsung v KPN
IPR2025-00512

4. Further, prior to filing suit, KPN provided Ericsson with notice of its infringement of each Asserted Patent and Ericsson's need to license each. KPN also offered to provide Ericsson with a license to each.

5. Despite these efforts, Ericsson has not obtained a license or any other non-assertion rights to any of the Asserted Patents. KPN thus files this suit to protect its valuable intellectual property rights.

PARTIES

6. Plaintiff Koninklijke KPN N.V. is a telecommunications (including fixed, mobile, television, and internet) and ICT solution provider headquartered at Wilhelminakade 123, NL-3072 AP, Rotterdam, The Netherlands.

7. On information and belief, Defendant LM Ericsson is a corporation organized and existing under the laws of Sweden with a principal place of business at Torshamnsgatan 21, Kista, SE-164 83 Stockholm, Sweden.

8. On information and belief, Defendant Ericsson USA is a corporation organized and existing under the laws of Delaware with its U.S. headquarters and principal place of business at 6300 Legacy Drive, Plano, Texas 75024.

JURISDICTION AND VENUE

9. This action arises under the patent laws of the United States, Title 35 of the United States Code.

10. This Court has subject matter jurisdiction pursuant to 28 U.S.C. §§ 1331 and 1338(a).

11. This Court has personal jurisdiction over LM Ericsson because, directly or through intermediaries, it has committed acts within Texas giving rise to this action and/or has established

minimum contacts with Texas such that the exercise of jurisdiction would not offend traditional notions of fair play and substantial justice.

12. Specifically, during the infringing time period, LM Ericsson has placed one or more infringing products into the stream of commerce via an established distribution channel with the knowledge and/or understanding that such products were being offered for sale, and/or sold to customers, and/or utilized in Texas. LM Ericsson also has contracted with various entities to perform certain services in Texas, including in the Eastern District of Texas.

13. For example, according to a press release, LM Ericsson has contracted with T-Mobile for the expansion and enhancement of T-Mobile's U.S. 5G network, which includes both 5G New Radio ("NR") hardware and software, and 5G Standalone ("SA") architecture from LM Ericsson. (*T-Mobile and Ericsson Sign Major $3.5 Billion 5G Agreement*, T-MOBILE (Sept. 11, 2018), https://www.t-mobile.com/news/press/ericsson-5g-agreement; *Ericsson Selected for Massive T-Mobile 5G Network Expansion Across the United States*, ERICSSON (Jan. 14, 2021), https://www.ericsson.com/en/news/2021/1/t-mobile-expands-5g-nationwide). T-Mobile and Ericsson have also conducted trials of Ericsson's 5G SA New Radio software on T-Mobile's commercial network. (Monica Alleven, *Ericsson Touts Standalone 5G Software*, FIERCE WIRELESS (Jul. 6, 2020), https://www.fiercewireless.com/wireless/ericsson-touts-standalone-5g-software). T-Mobile offers 5G service in Houston, Texas, as well as in the Eastern District of Texas. (*5G & 4G Coverage Map*, T-MOBILE, https://www.t-mobile.com/business/coverage/5g-coverage-map (last visited Nov. 14, 2022)).

[redacted]

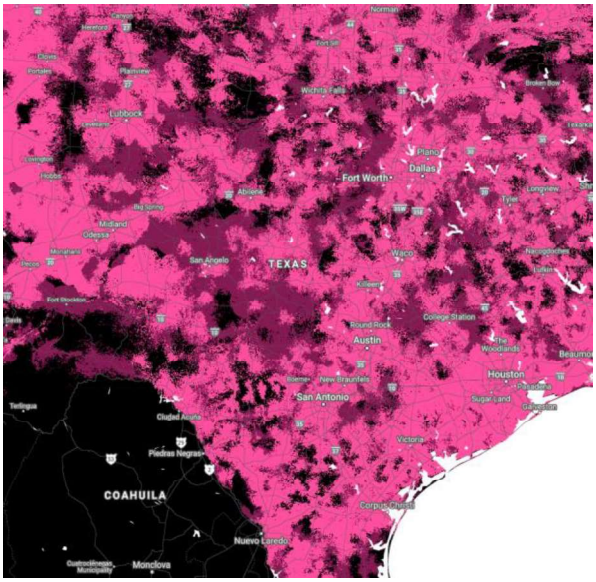

14. Further, according to a press release, LM Ericsson has contracted with Verizon in the deployment of Verizon's 5G Core network. (*Version Awards 5G Contract to Ericsson*, ERICSSON (Dec. 11, 2017), https://www.ericsson.com/en/press-releases/2017/12/verizon-awards-5g-contract-to-ericsson). Verizon offers 5G service in Dallas, Texas; Houston, Texas; and Arlington, Texas. (*Version 5G Ultra Wideband Service Available in More Cities*, VERIZON, https://www.verizon.com/about/news/verizon-5g-ultra-wideband-service-available-more-cities (updated Nov. 20, 2020)).

15. LM Ericsson also has contracted with Verizon to deploy Ericsson's Radio System series, which is compatible with both 4G LTE and 5G. (Monica Alleven, *Verizon Awards New LTE Markets to Ericsson*, FIERCE WIRELESS (July 24, 2018), https://www.fiercewireless.com/wireless/verizon-awards-new-lte-markets-to-ericsson; Corinne Reichert, *Ericsson Bringing Advanced LTE to More Verizon Cities*, ZDNET (July 24, 2018), https://www.zdnet.com/article/ericsson-bringing-advanced-lte-to-more-verizon-cities/). Verizon offers 4G LTE service in numerous cities across Texas, including Abilene, Amarillo, Austin, Beaumont-Port Arthur, Big Springs, Brownsville, Bryan-College Station, Corpus Christi, Dallas-

Fort Worth, El Paso, Houston, Laredo, Longview-Marshall, Lubbock, Lufkin-Nacogdoches, McAllen, Midland, Odessa, Paris, San Angelo, San Antonio, Sherman-Denison, Temple-Killeen, Texarkana, Tyler, Victoria, Waco, and Wichita Falls. (*Verizon LTE Advanced Covers More Than 450 Cities from Coast to Coast*, VERIZON, https://www.verizon.com/featured/lte-advanced/ (last visited Nov. 14, 2022)). LM Ericsson also collaborated with Verizon in its test of advanced LTE technologies that took place in Irving, Texas, using LM Ericsson's Radio 2208 outdoor micro base station, indoor B48 Radio Dot system unit 5216, and radio system comprising 4x4 MIMO and 4x 20MHz carrier aggregation, including the CBRS spectrum. (Corinne Reichert, *Ericsson Bringing Advanced LTE to More Verizon Cities*, ZDNET (Jul. 24, 2018), https://www.zdnet.com/article/ericsson-bringing-advanced-lte-to-more-verizon-cities/).

16. Further, according to a press release, LM Ericsson has contracted with AT&T to be one of AT&T's technology suppliers for its 5G network. AT&T and Ericsson have conducted a 5G data transfer using Ericsson's 5G-NR capable radios in Waco, Texas. (*Ericsson Brings 5G to Life for US Operators*, ERICSSON (Sept. 10, 2018), https://www.ericsson.com/en/news/2018/8/us-5g-milestones). AT&T and LM Ericsson have also collaborated in providing a fixed-wireless 5G signal to select customers in Austin, Texas, using Ericsson's 5G radio access network. (*AT&T Launches 5G Trial With DIRECTV NOW in Austin*, ERICSSON (June 28, 2017), https://www.ericsson.com/en/news/2017/6/att-launches-5g-trial-with-directv-now-in-austin). AT&T offers 5G service in Houston, Texas, and Waco, Texas.

17. Further, LM Ericsson and Ericsson USA are deploying Ericsson's 5G Core system at Ericsson USA's headquarters in Plano, Texas. (*Ericsson Powers North Texas Campuses with 5G Distributed Innovation Network*, ERICSSON (Sept. 3, 2020), https://www.ericsson.com/en/press-releases/6/2020/ericsson-powers-north-texas-campuses-with-5g-distributed-innovation-network).

18. Because this Court has personal jurisdiction over LM Ericsson—a foreign corporation—venue is proper pursuant to 28 U.S.C. § 1391(c).

19. This Court has personal jurisdiction over Ericsson USA because it has its principal place of business in Plano, Texas.

20. Further, Ericsson USA maintains a significant physical presence in the Eastern District of Texas, including maintaining its headquarters at 6300 Legacy Drive, Plano, Texas 75024.

21. Further, upon information and belief, Ericsson USA has developed, marketed, and sold one or more infringing products in the Eastern District of Texas. For example, Ericsson has established a "smart factory" in Lewisville, Texas, at which Ericsson USA is manufacturing 5G base stations. (*Ericsson USA 5G Smart Factory Produces its First Base Stations*, ERICSSON (Mar. 4, 2020), https://www.ericsson.com/en/press-releases/2020/3/ericsson-usa-5g-smart-factory-produces-its-first-base-stations).

22. For the reasons set forth above, venue is proper for Ericsson USA under 28 U.S.C. § 1400.

THE ASSERTED PATENTS

23. This lawsuit asserts causes of action for infringement of U.S. Patent Nos. 7,092,705 B2; 8,660,560 B2; 8,886,772 B2; 9,372,098 B2; and 10,924,500 B2.

A. U.S. Patent No. 7,092,705 B2

24. On August 15, 2006, the United States Patent and Trademark Office ("PTO") issued U.S. Patent No. 7,092,705 B2 (the "'705 Patent"), which is entitled "System and Method for Checking Parameter Settings of Radio Networks." A true and correct copy of the '705 Patent is attached as Exhibit A.

25. KPN owns all substantial rights to the ’705 Patent, including the right to sue and recover damages for all infringement thereof.

B. U.S. Patent No. 8,660,560 B2

26. On February 25, 2014, the PTO issued U.S. Patent No. 8,660,560 B2 (the “’560 Patent”), which is entitled “System for Updating a Neighbour Cell List (NCL) of a Wireless Access Node of a Telecommunications Architecture and Method.” A true and correct copy of the ’560 Patent is attached as Exhibit B.

27. KPN owns all substantial rights to the ’560 Patent, including the right to sue and recover damages for all infringement thereof.

28. KPN has submitted a declaration to ETSI stating, “[t]o the extent that the [U.S. Patent No. 8,660,560] . . . [is] or become[s], and remain[s] ESSENTIAL . . . , the Declarant and/or its AFFILIATES are (1) prepared to grant irrevocable licenses under this[] IPR[] on terms and conditions which are in accordance with Clause 6.1 of the ETSI IPR Policy; and (2) will comply with Clause 6.1 bis of the ETSI IPR Policy.”

29. On information and belief, Ericsson denies that any claim of the ’560 Patent currently is ESSENTIAL IPR to any ETSI standard.

30. On information and belief, Ericsson denies that any claim of the ’560 Patent ever was ESSENTIAL IPR to any ETSI standard.

C. U.S. Patent No. 8,886,772 B2

31. On November 11, 2014, the PTO issued U.S. Patent No. 8,886,772 B2 (the “’772 Patent”), entitled “Method and System for Remote Device Management.” A true and correct copy of the ’772 Patent is attached as Exhibit C.

32. KPN owns all substantial rights to the ’772 Patent, including the right to sue and recover damages for all infringement thereof.

33. KPN has submitted a declaration to ETSI stating, "[t]o the extent that the [U.S. Patent No. 8,886,772] . . . [is] or become[s], and remain[s] ESSENTIAL . . . , the Declarant and/or its AFFILIATES are (1) prepared to grant irrevocable licenses under this[] IPR[] on terms and conditions which are in accordance with Clause 6.1 of the ETSI IPR Policy; and (2) will comply with Clause 6.1 bis of the ETSI IPR Policy."

34. On information and belief, Ericsson denies that any claim of the '772 Patent currently is ESSENTIAL IPR to any ETSI standard.

35. On information and belief, Ericsson denies that any claim of the '772 Patent ever was ESSENTIAL IPR to any ETSI standard.

36. The '772 Patent previously was asserted in *Koninklijke KPN N.V., v. Samsung Electronics Co., Ltd.*, Civil Action Nos. 2:14-cv-1165 and 2:15-cv-948 (E.D. Tex.). The Court in that matter construed various terms of the patent. As stated at D.I. 315 in 2:14-cv-1165, Samsung subsequently entered into a settlement and license agreement with KPN.

37. The '772 Patent also has been asserted in the United States District Court for the District of Delaware against Xiaomi in Civil Action No. 1:21-cv-00041 and u-Blox in Civil Action No. 1:21-cv-00046-LPS. KPN and u-Blox subsequently reached an agreement to resolve the dispute.

38. The '772 Patent also repeatedly has been affirmed to be valid.

39. In IPR2016-00808, the United States Patent and Trademark Office Patent Trial and Appeal Board ("PTAB") declined to institute *inter partes* review of the '772 Patent—finding "no reasonable likelihood" that any claim was invalid or nonpatentable.

40. Similarly, in IPR2022-00025, the PTAB declined to institute *inter partes* review of the '772 Patent—finding "no reasonable likelihood" that claims 2–6, 11, 14, or 16 were invalid or nonpatentable.

D. U.S. Patent No. 9,372,098 B2

41. On June 21, 2016, the PTO issued U.S. Patent No. 9,372,098 B2 (the "'098 Patent"), which is entitled "Telecommunications Network and Method Of Transferring User Data In Signaling Messages From a Communication Unit to a Data Processing Centre." A true and correct copy of the '098 Patent is attached as Exhibit D.

42. KPN owns all substantial rights to the '098 Patent, including the right to sue and recover damages for all infringement thereof.

43. KPN has submitted a declaration to ETSI stating, "[t]o the extent that the [U.S. Patent No. 9,372,098] . . . [is] or become[s], and remain[s] ESSENTIAL . . . , the Declarant and/or its AFFILIATES are (1) prepared to grant irrevocable licenses under this[] IPR[] on terms and conditions which are in accordance with Clause 6.1 of the ETSI IPR Policy; and (2) will comply with Clause 6.1 bis of the ETSI IPR Policy."

44. On information and belief, Ericsson denies that any claim of the '098 Patent currently is ESSENTIAL IPR to any ETSI standard.

45. On information and belief, Ericsson denies that any claim of the '098 Patent ever was ESSENTIAL IPR to any ETSI standard.

E. U.S. Patent No. 10,924,500 B2

46. On February 16, 2021, the PTO issued U.S. Patent No. 10,924,500 B2 (the "'500 Patent"), which is entitled "System to Detect Behaviour in a Telecommunications Network." A true and correct copy of the '500 Patent is attached as Exhibit E.

47. KPN owns all substantial rights to the '500 Patent, including the right to sue and recover damages for all infringement thereof.

48. KPN has submitted a declaration to ETSI stating, "[t]o the extent that the [U.S. Patent No. 10,924,500] . . . [is] or become[s], and remain[s] ESSENTIAL . . . , the Declarant and/or

its AFFILIATES are (1) prepared to grant irrevocable licenses under this[] IPR[] on terms and conditions which are in accordance with Clause 6.1 of the ETSI IPR Policy; and (2) will comply with Clause 6.1 bis of the ETSI IPR Policy."

49. On information and belief, Ericsson denies that any claim of the '500 Patent currently is ESSENTIAL IPR to any ETSI standard.

50. On information and belief, Ericsson denies that any claim of the '500 Patent ever was ESSENTIAL IPR to any ETSI standard.

NOTICE

51. KPN and Ericsson have a long history. Ericsson first negotiated to obtain rights to certain of KPN's patents after KPN filed a lawsuit against it in December 2003. [redacted].

52. [redacted]."

53. [redacted].

54. [redacted]

[redacted]

[redacted].

55. [redacted].

56. [redacted]

57. [redacted]

58. [redacted]

59. [redacted]

60.

61.

.

62.

63.

.

64.

.

65.

66.

67.

68.

69.

70.

71.

72. Despite these and other efforts, Ericsson never obtained a license or other rights to the Asserted Patents, and its infringing products remain unlicensed to this day.

COUNT 1 – INFRINGEMENT OF U.S. PATENT NO. 7,092,705 B2

73. KPN repeats and incorporates by reference each preceding paragraph as if fully set forth herein, and further states:

74. Ericsson has directly infringed, and continues to directly infringe, the '705 Patent in violation of 35 U.S.C. § 271(a) by making, using, selling, and/or offering for sale in the United States, and/or importing into the United States, without authorization, one or more products that practice various claims of the '705 Patent, literally or under the doctrine of equivalents (hereafter "'705 Accused Products"). At a minimum, such '705 Accused Products include all devices that operate as described in the claims of the '705 Patent. These include products like Ericsson's Expert Analytics product, Software Probe product, *Securing 5G Experience with Software Probes*, ERICSSON, https://www.ericsson.com/en/core-network/5g-core/software-probes (last visited Nov. 14, 2022), and associated hardware, which Ericsson markets as allowing carriers and other users to "measure[] the perceived experience of subscribers based on correlated metrics and events from network nodes, probes, devices, OSS/BSS, and other sources":

> As a multi-vendor, cross-domain, big data analytics solution tailored to service providers, Expert Analytics is designed to improve the subscriber experience and drive new revenue through a real-time, end-to-end telecommunication analytics solution offering unique insights and closed-loop actions.
>
> Expert Analytics measures the perceived experience of subscribers based on correlated metrics and events from network nodes, probes, devices, OSS/BSS, and other sources. It helps service providers predict, prioritize, and resolve subscriber-impacting events as well as to retain and upsell based on experience and behavior profiles.
>
> Expert Analytics supports a wide range of services, including challenging new services such as VoLTE and VoWiFi as well as encrypted over-the-top (OTT) traffic. It is 5G enabled for both core and radio, bringing essential insights to help telecommunication service providers successfully bring 5G capabilities to their subscribers.

Expert Analytics, ERICSSON, https://www.ericsson.com/en/portfolio/cloud-software--services/automated-network-operations/analytics-and-assurance/expert-analytics (last visited Nov. 14, 2022).

75. As detailed below, the '705 Accused Products are configured by Ericsson to practice every element of, at least, Claim 1 of the '705 Patent, literally or under the doctrine of equivalents.[1] Further, the identified components and functionality are representative of the components and functionality present in all '705 Accused Products.

76. Claim 1 of the '705 Patent recites "[a] method for verifying a modified parameter obtained from changing an operational parameter of a component of a radio network, the method comprising the steps of: before the modified parameter is implemented in the network, checking the modified parameter on the basis of a rule so as to yield a result, said rule comprising both a technically sufficient parameter setting requirement and a deviation from the setting requirement based on an operational requirement deduced from use of the radio network; and if the result indicates that the rule has been obeyed, storing the modified parameter in the network such that subsequent network operation will respond to the modified parameter."

77. The '705 Accused Products are configured by Ericsson to verify a modified parameter obtained from changing an operational parameter of a component of a radio network. Specifically, as Ericsson has stated, its Expert Analytics function is configured to provide "actionable insights about customer symptoms, root causes and next best actions with . . . real time, near-network correlation" in order to "improve[] customer experience, loyalty and ARPU, as well as increase[] efficiencies." *Telecom Analytics*, ERICSSON, https://www.ericsson.com/en/network-automation/telecom-analytics (last visited Nov. 14, 2022).

[1] This description is illustrative and is not intended to be an exhaustive or limiting explanation of every manner in which each '705 Accused Product infringes the '705 Patent.

It also is configured to "identify subscriber-impacting events in near real time, prioritize based on scope and importance of impact, and automatically identify the most probable cause of the issue before triggering the next best action (policy, configuration, trouble ticket, etc.)." *Expert Analytics*, ERICSSON, https://www.ericsson.com/en/portfolio/cloud-software--services/automated-network-operations/analytics-and-assurance/expert-analytics (Nov. 14, 2022). Further, Ericsson has stated that "Ericsson Expert Analytics analyzes data from any radio technology, 4G/WiFi/Narrowband IoT and any multi-vendor radio, packet core and IMS network." *T-Mobile US Deploys Ericsson Expert Analytics*, ERICSSON (Feb. 26, 2018), https://www.ericsson.com/en/press-releases/2018/2/t-mobile-us-deploys-ericsson-expert-analytics.

78. In addition, Ericsson's Expert Analytics function is configured by Ericsson such that, before the modified parameter is implemented in the network, Ericsson's Expert Analytics function checks the modified parameter on the basis of a rule comprising both a technically sufficient parameter setting requirement and a deviation from the setting requirement based on an operational requirement deduced from use of the radio. For example, Ericsson has stated that its Expert Analytics function is "a real time, multivendor, cross domain, big data analytics platform that produces actionable insights about customer experience and customer behavior" using "[r]eal time, near-network correlation, coupled with unique, proven and patented algorithms, data models and business rules provide actionable insights about customer symptoms, root causes and next best actions, thus reducing handling time, rebound rate and escalations for customer impacting events." Laurie Spiegel, *Use Your Big Data to Tailor an Experience for Every Customer*, ERICSSON (Oct. 23, 2018) https://www.ericsson.com/en/blog/2018/10/use-your-big-data-to-tailor-an-experience-for-every-customer. Ericsson also stated that its Expert Analytics function utilizes a "patented Service Level Index (SLI)" to "measure[] subjective customer satisfaction for every customer" and

"a Cell Level Index (CLI)" that "expresses the quality of service as perceived by the subscribers served by a particular radio cell." *Id*.

79. Further, Ericsson has stated that "[m]achine intelligence then extracts customer behavior insights that can drive targeted retention and upsell-offer recommendations," *id.*, stating that "Telecom Analytics combines technical parameters with advanced psychological measurements to create the patented Service Level Index." Laurie Spiegel, *Linking Network Behavior with Customer Behavior via Analytics*, ERICSSON (Apr. 10, 2018), https://www.ericsson.com/en/blog/2018/4/linking-network-behavior-with-customer-behavior-via-analytics. Ericsson also has stated that "[t]he SLI model is a psychology-based hypothesis that represents these factors mathematically" and explained that "[t]he model is trained using survey-based reference data. In this way, it is calibrated to how service and network experiences are perceived by a particular user base." Ericsson also has stated that "[t]he SLI predicts a user's current level of satisfaction by interpreting observations about their service usage and the delivered service quality" and that the "[a]n analytics model evaluates the observations and delivers a score." In short, the Ericsson Expert Analytics function is configured by Ericsson such that business rules are generated that combine technical parameters with advanced psychological measurements to perform provisioning, traffic shaping, and cell-level parameter and policy changes.

80. In addition, Ericsson's Expert Analytics function is configured by Ericsson such that, if the results indicate that the rule has been obeyed, it stores the modified parameter in the network such that subsequent network operation will respond to the modified parameter. As set forth above, Ericsson's Expert Analytics function makes network changes based on business rules such that a change would not be considered a next-best action if it violates a business rule, for instance, a predicted decrease in SLI. As Ericsson has stated, "[t]he thinking phase derives its decisions from facts and previous experiences stored in a knowledge base. The key is a machine-

readable knowledge representation in the form of a model." Jörg Niemöller & Leonid Mokrushin, *Cognitive Technologies in Network and Business Automation*, ERICSSON (June 28, 2018), https://www.ericsson.com/en/reports-and-papers/ericsson-technology-review/articles/cognitive-technologies-in-network-and-business-automation. Ericsson also has stated that "[g]raph databases and triple stores are frequently used for efficient storage"—demonstrating that such changes are stored for future use. *Id.*

81. Ericsson thus directly infringed, and continues to directly infringe, each element of, at least, Claim 1 of the '705 Patent by selling and offering to sell in the United States, and by importing into the United States, without authorization, '705 Accused Products.

82. In addition, Ericsson indirectly infringed, and continues to directly infringe, Claim 1 of the '705 Patent in violation of 35 U.S.C. § 271(b) by taking active steps to encourage and facilitate direct infringement by third parties, including partners and service providers, in the United States, through the dissemination of the '705 Accused Products and the creation and dissemination of promotional and marketing materials, supporting materials, instructions, product manuals, and/or technical information relating to such products with knowledge and the specific intent that its efforts would result in the direct infringement of the '705 Patent.

83. For example, Ericsson took active steps to encourage service providers and other customers to use the '705 Accused Products in the United States in a manner that would directly infringe each element of at least Claim 1 of the '705 Patent as described above, including by marketing the functionality and creating and distributing various training programs for use of it, as demonstrated by their own papers and press releases. *Id.*; *Ericsson Enables Smarter Networks that Learn and Improve*, ERICSSON (Oct. 20, 2021), https://www.ericsson.com/en/press-releases/2021/10/ericsson-enables-smarter-networks-that-learn-and-improve https://www.ericsson.com/en/press-releases/2021/10/ericsson-enables-smarter-networks-that-

learn-and-improve; BT and Ericsson Join Up to Deliver Cloud Native Dual-Mode 5G Core, Ericsson (Apr. 15 2020), https://www.ericsson.com/en/press-releases/2020/4/bt-and-ericsson-join-up-to-deliver-cloud-native-dual-mode-5g-core; *Swisscom Optimizes Customer Experience with Ericsson Expert Analytics*, ERICSSON (Dec. 6, 2018), https://www.ericsson.com/en/press-releases/2018/12/swisscom-optimizes-customer-experience-with-ericsson-expert-analytics.

84. In short, Ericsson actively induced, and continues to actively induce, the direct infringement of the '705 Patent by service providers and other customers by distributing at least the Ericsson Expert Analytics functionality and, among other things, creating and distributing various programs that train customers to use them in an infringing manner.

85. Further, Ericsson took such active steps after receiving the above-described notice of the '705 Patent and its infringement of it.

86. In addition, Ericsson has indirectly infringed, and continues to indirectly infringe, Claim 1 of the '705 Patent in violation of 35 U.S.C. § 271(c) by selling or offering to sell in the United States, or importing into the United States, the '705 Accused Products with knowledge that they are especially designed or adapted to operate in a manner that infringes the '705 Patent, and despite the fact that the infringing technology or aspects of each '705 Accused Product are not a staple article of commerce suitable for substantial non-infringing use.

87. In addition, Ericsson's infringement of the '705 Patent was willful. As detailed above, KPN provided Ericsson with notice of the '705 Patent and its infringement of it. Nevertheless, without authorization, Ericsson deliberately continued to infringe the '705 Patent and also encouraged others to infringe the '705 Patent as described above, including by selling and/or using '705 Accused Products in the United States.

88. Ericsson's acts of infringement have caused damage to KPN, and KPN is entitled to recover from Ericsson the damages it has sustained as a result of such wrongful acts in an amount to be proven at trial.

89. Further, KPN states that it is entitled to all damages to which it otherwise is entitled because it has complied with 35 U.S.C. § 287 in that it has not manufactured, used, sold, or offered for sale in the United States, or imported into the United States, any product that practices the '705 Patent, and KPN is not aware of any licensee that has been confirmed to have manufactured, used, sold, or offered for sale in the United States, or imported into the United States, a product that practices the '705 Patent prior to KPN providing Ericsson with notice of its infringement of this patent.

COUNT 2 – INFRINGEMENT OF U.S. PATENT NO. 8,660,560 B2

90. KPN repeats and incorporates by reference each preceding paragraph as if fully set forth herein, and further states:

91. Ericsson has directly infringed, and continues to directly infringe, the '560 Patent in violation of 35 U.S.C. § 271(a) by making, using, selling, and/or offering for sale in the United States, and/or importing into the United States, without authorization, one or more products that practice various claims of the '560 Patent, literally or under the doctrine of equivalents (hereafter "'560 Accused Products"). At a minimum, such '560 Accused Products include all devices that operate as described in the claims of the '560 Patent. These include products like the Ericsson 5G Radio Access Network, Ericsson LTE Radio Access Network, and Ericsson WCDMA Radio Access Network components, including their respective gNb, eNodeB (eNB), and/or Radio Network Controller (RNC) components.

92. As detailed below, the '560 Accused Products are configured by Ericsson to practice every element of at least Claim 9 of the '560 Patent, literally or under the doctrine of

equivalents.[2] Further, the identified components and functionality are representative of the components and functionality present in all ’560 Accused Products.

93. Claim 9 of the ’560 Patent recites “a method for updating at least one of the first and second neighbour cell lists . . . [i]n a telecommunications architecture comprising a first wireless access network having a first wireless access node for which at least one first neighbour cell list is defined and a second wireless access network having a second wireless access node for which at least one second neighbour cell list is defined,” the method “comprising the steps of detecting user terminals to be transferred from the first wireless access node of the first wireless access network to the second wireless access node of the second wireless access network; selecting a part of the user terminals; requesting from the first wireless access node one or more of the selected user terminals to report cell information of a plurality of wireless access nodes of at least one of the first wireless access network and the second wireless access network; receiving the cell information from the one or more of the selected user terminals; and updating at least one of the first neighbour cell list and the second neighbour cell list using the received cell information.”

94. The ’560 Accused Products are configured by Ericsson to update at least one of the first and second neighbour cell lists in a telecommunications architecture comprising a first wireless access network having a first wireless access node for which at least one first neighbour cell list is defined and a second wireless access network having a second wireless access node for which at least one second neighbour cell list is defined. Specifically, a gNb, eNB, and/or RNC is a wireless access node and is configured by Ericsson such that it that contains information about neighbouring cells, including neighbour information, neighbour cell lists (NCL), neighbour relations (NR), and/or a neighbour relation table (NRT). Further, each is configured by Ericsson

[2] This description is illustrative and is not intended to be an exhaustive or limiting explanation of every manner in which each ’560 Accused Product infringes the ’560 Patent.

such that it includes an Automatic Neighbour Relation (ANR) function that comprises both (1) a Neighbour Detection Function configured to find new neighbours and to add them to the neighbour relations table and (2) a Neighbour Removal Function configured to remove outdated neighbour relations.

95. Further, such ’560 Accused Products are configured by Ericsson such that each is able to detect user terminals to be transferred from the first wireless access node of the first wireless access network to the second wireless access node of the second wireless access network. Specifically, each is configured by Ericsson to detect whether a terminal supports different radio access technologies (RATs), including to determine whether it is capable of detecting and measuring the other RAT(s) to evaluate if transfer to the other RAT(s) is possible/needed.

96. Further, such ’560 Accused Products are configured by Ericsson such that each is able to select a part of the user terminals and request from the first wireless access node one or more of the selected user terminals to report cell information of a plurality of wireless access nodes of at least one of the first wireless access network and the second wireless access network. Specifically, each is configured by Ericsson such that it will take into account whether a terminal is capable of performing logged Minimization of Drive Tests (MDT) functionality, including to (i) log (i.e. to store/save) the measurement information, (ii) indicate to the network that the terminal has Logged MDT measurements available, and (iii) provide the Logged MDT measurements to an entity in the network. If a terminal does not support logged MDT, the gNb, eNB, and/or RNC will not select it. Such gNb, eNB, and/or RNC is further configured by Ericsson such that it can perform a Measurement Configuration procedure by sending a *LoggedMeasurementConfiguration* message to a selected terminal to cause the terminal to log and report cell information such as cell identity, carrier frequency, and signal strength or signal quality for up to a specified number of cells, including neighbouring cells.

97. Further, such ’560 Accused Products are configured by Ericsson such that each is able to receive the cell information from the one or more of the selected user terminals and update at least one of the first neighbour cell list and the second neighbour cell list using the received cell information. Specifically, each is configured by Ericsson such that it is able to receive the logged measurement report from the terminal and use it to update its neighbour relations table, including to remove outdated neighbour relations and/or information.

98. Ericsson thus directly infringed, and continues to directly infringe, each element of Claim 9 of the ’560 Patent by selling and offering to sell in the United States, and by importing into the United States, without authorization, ’560 Accused Products.

99. In addition, Ericsson indirectly infringed, and continues to indirectly infringe, Claim 9 of the ’560 Patent in violation of 35 U.S.C. § 271(b) by taking active steps to encourage and facilitate direct infringement by third parties, including partners and service providers, in the United States, through the dissemination of the ’560 Accused Products and the creation and dissemination of promotional and marketing materials, supporting materials, instructions, product manuals, and/or technical information relating to such products with knowledge and the specific intent that its efforts would result in the direct infringement of the ’560 Patent.

100. For example, Ericsson took active steps to encourage service providers and other customers to use the ’560 Accused Products in the United States in a manner that would directly infringe each element of at least Claim 9 of the ’560 Patent as described above, including by creating and distributing various training programs for use of the Ericsson 5G Radio Access Network (*Ericsson Training to Suit Your Learning Style and Competence Needs*, ERICSSON, https://www.ericsson.com/en/portfolio/training-offerings?page=learning_path&path=19 (last visited Nov. 14, 2022)); the Ericsson LTE Radio Access Network (*Long Term Evolution (LTE) Radio Access Network (RAN) L18: Training Programs*, ERICSSON, (2018)

https://mediabank.ericsson.net/deployedFiles/ericsson.com/498_03819-FAP%20130%20506_Long%20Term%20Evolution%20Radio%20Access%20Network%20L18%20Rev%20B.pdf); the Ericsson WCDMA Radio Access Network (*WCDMA RN 2019/2020 Learning Services, Ericsson*, (2019), https://mediabank.ericsson.net/deployedFiles/ericsson.com/WCDMA%20RAN%202019_2020%20-%20Rev%20-%20A.pdf); and the Ericsson Network Manager (https://www.ericsson.com/en/portfolio/training-offerings?page=learning_path&path=4).

101. In short, Ericsson actively induced, and continues to actively induce, the direct infringement of the '560 Patent by service providers and other customers by distributing at least the '560 Accused Products and, among other things, creating and distributing various programs that train customers to use them in an infringing manner.

102. Further, Ericsson took such active steps after receiving the above-described notice of the '560 Patent and its infringement of it.

103. In addition, Ericsson has indirectly infringed, and continues to indirectly infringe, Claim 9 of the '560 Patent in violation of 35 U.S.C. § 271(c) by selling or offering to sell in the United States, or importing into the United States, the '560 Accused Products with knowledge that they are especially designed or adapted to operate in a manner that infringes the '560 Patent, and despite the fact that the infringing technology or aspects of each '560 Accused Product are not a staple article of commerce suitable for substantial non-infringing use.

104. In addition, Ericsson's infringement of the '560 Patent was willful. As detailed above, KPN provided Ericsson with notice of the '560 Patent and its infringement of it. Nevertheless, without authorization, Ericsson deliberately continued to infringe the '560 Patent and also encouraged others to infringe the '560 Patent as described above, including by selling and/or using '560 Accused Products in the United States.

105. Ericsson's acts of infringement have caused damage to KPN, and KPN is entitled to recover from Ericsson the damages it has sustained as a result of such wrongful acts in an amount to be proven at trial.

106. Further, KPN states that it is entitled to all damages to which it otherwise is entitled because it has complied with 35 U.S.C. § 287 in that it has not manufactured, used, sold, or offered for sale in the United States, or imported into the United States, any product that practices the '560 Patent, and KPN is not aware of any licensee that has been confirmed to have manufactured, used, sold, or offered for sale in the United States, or imported into the United States, a product that practices the '560 Patent prior to KPN providing Ericsson with notice of its infringement of this patent.

COUNT 3 – INFRINGEMENT OF U.S. PATENT NO. 8,886,772

107. Plaintiff repeats and incorporates by reference each preceding paragraph as if fully set forth herein and further states:

108. Ericsson has directly infringed, and continues to directly infringe, the '772 Patent in violation of 35 U.S.C. § 271(a) by making, using, selling, and/or offering for sale in the United States, and/or importing into the United States, without authorization, one or more products that practice various claims of the '772, Patent literally or under the doctrine of equivalents (hereafter "'772 Accused Products"). At a minimum, such '772 Accused Products include all devices that operate as described in the claims of the '772 Patent. These include products like Ericsson's 5G Radio Network equipment, including those comprising Ericsson's 5G Core and Cloud Core offerings. Additional examples of such product offerings are described in the following sources: *5G Core (5GC)*, ERICSSON, https://www.ericsson.com/en/core-network/5g-core (last visited Nov. 14, 2022); *Cloud Native Applications*, ERICSSON, https://www.ericsson.com/en/cloud-native (last visited Nov. 14, 2022); *Your Quick Guide to Network Functions in 5GC,* ERICSSON,

https://www.ericsson.com/en/blog/2019/2/your-quick-guide-to-network-functions-in-5g-core/ (last visited Nov. 14, 2022).

109. As detailed below, the '772 Accused Products are configured by Ericsson to practice every element of at least Claim 16 of the '772 Patent, literally or under the doctrine of equivalents.[3] Further, the identified components and functionality are representative of the components and functionality present in all '772 Accused Products.

110. Claim 15 of U.S. Patent No. 8,886,772 recites "[a] method for remote device management of a manageable electronic device in a network, the network comprising an auto-configuration server managing device (ACSMD), at least one database storing information for the identification of electronic devices, and a plurality of auto-configuration servers (ACSs), the ACSMD being coupled intermediately between the ACSs and the managed electronic device for controlling access to the ACSs, the method comprising the steps of: the manageable electronic device sending a request for configuration data to the ACSMD via the network, wherein configuration data comprise data for configuring the manageable electronic device, and responsive to receiving the request, the ACSMD: identifying the manageable electronic device using a comparison of at least a portion of the request with the information for the identification of electronic devices of the at least one database, and identifying an ACS from the plurality of ACSs in accordance with the identification of the manageable electronic device to provide configuration data to the manageable electronic device, and relaying the request to the identified ACS." Claim 16 further recites "[t]he method of claim 15, further comprising the steps of the ACSMD receiving a reply from the identified ACS, and relaying the reply to the manageable electronic device."

[3] This description is illustrative and is not intended to be an exhaustive or limiting explanation of every manner in which each '772 Accused Product infringes the '772 Patent.

[redacted]

111. The ’772 Accused Products are configured by Ericsson to perform a method for remote device management of a manageable electronic device in a network, the network comprising an auto-configuration server managing device (ACSMD), at least one database storing information for the identification of electronic devices, and a plurality of auto-configuration servers (ACSs), the ACSMD being coupled intermediately between the ACSs and the managed electronic device for controlling access to the ACSs. Specifically, the below architecture depicts the architecture for Onboarding manageable electronic devices in or to a standalone private network like those Ericsson manufacturers and sells.

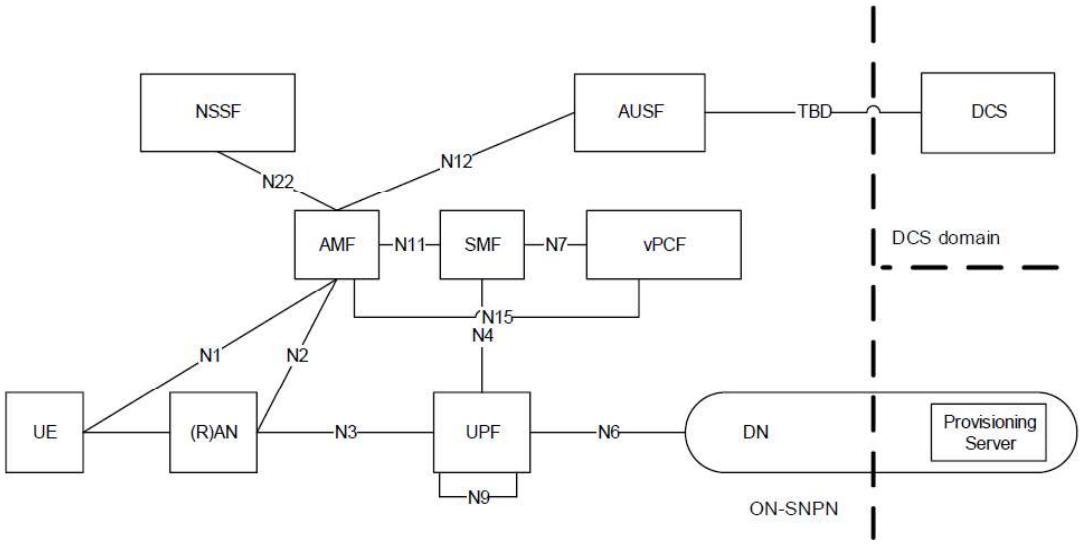

In this exemplary configuration, the UE corresponds to the manageable electronic device, the DCS (Default Credentials Server) corresponds to the ACS, and the AMF + AUSF correspond to the ACSMD. The function of each is further described below. As depicted above, the AMF + AUSF is communicatively coupled between the UE (MED) and the DCS (ACS). Further, the ability to determine the DCS based on the SUCI demonstrates the presence of a database for storing information for the identification of electronic devices.

112. Further, such ’772 Accused Products are configured by Ericsson such that the manageable electronic device (which may comprise, e,g., a 5G-enabled manageable electronic device) is able to send a request for configuration data to the ACSMD via the network, wherein configuration data comprises data for configuring the manageable electronic device. For example, the AMF + AUSF is configured by Ericsson to receive a NAS registration request message with value “SNPN Onboarding” from such a manageable electronic device. Such message is necessary to start the authentication process for the manageable electronic device. If successful, the AMF + AUSF will inform the manageable electronic device that it has been authenticated.

113. Further, such ’772 Accused Products are configured by Ericsson such that, responsive to receiving the request, the ACSMD is configured to identify the manageable electronic device using a comparison of at least a portion of the request with the information for the identification of electronic devices of the at least one database. For example, the AMF + AUSF is configured by Ericsson to receive a NAS registration request message with value “SNPN Onboarding” from such a manageable electronic device. Such message is necessary to start the authentication process for the manageable electronic device and includes a SUCI derived from a SUPI, which uniquely identifies the manageable electronic device.

114. Further, such ’772 Accused Products are configured by Ericsson such that, responsive to receiving the request, the ACSMD is configured to identify an ACS from the plurality of ACSs in accordance with the identification of the manageable electronic device to provide configuration data to the manageable electronic device and to relay the request to the identified ACS. For example, the AMF + AUSF is configured by Ericsson to receive a NAS registration request message with value “SNPN Onboarding” from such a manageable electronic device. Such message is necessary to start the authentication process for the manageable electronic device and includes a SUCI derived from a SUPI, which uniquely identifies the manageable

electronic device. The AMF + AUSF is configured to then determine the corresponding DCS based on such SUCI and relay such request to the identified DCS.

115. Further, such ’772 Accused Products are configured by Ericsson such that the ACSMD receives a reply from the identified ACS and relays the reply to the manageable electronic device. For example, the AMF + AUSF is configured to receive a reply from the DCS and relay that reply to the manageable electronic device, including to inform the manageable electronic device whether it has been authenticated.

116. Further, the above structures and organization are merely one way in which the ’772 Accused Products are configured by Ericsson to infringe. Such products also are configured by Ericsson such that the AUSF may operate as an ACS and the DCS may comprise the recited database.

117. Ericsson thus directly infringed, and continues to directly infringe, each element of Claim 16 of the ’772 Patent by selling and offering to sell in the United States, and by importing into the United States, without authorization, ’772 Accused Products.

118. In addition, Ericsson indirectly infringed, and continues to indirectly infringe, Claim 16 of the ’772 Patent in violation of 35 U.S.C. § 271(b) by taking active steps to encourage and facilitate direct infringement by third parties, including partners and service providers, in the United States, through the dissemination of the ’772 Accused Products and the creation and dissemination of promotional and marketing materials, supporting materials, instructions, product manuals, and/or technical information relating to such products with knowledge and the specific intent that its efforts would result in the direct infringement of the ’772 Patent.

119. In short, Ericsson actively induced, and continues to actively induce, the direct infringement of the ’772 Patent by service providers and other customers by distributing at least

the ’772 Accused Products and, among other things, creating and distributing various programs that train customers to use them in an infringing manner.

120. Further, Ericsson took such active steps after receiving the above-described notice of the ’772 Patent and its infringement of it.

121. In addition, Ericsson has indirectly infringed, and continues to indirectly infringe, Claim 16 of the ’772 Patent in violation of 35 U.S.C. § 271(c) by selling or offering to sell in the United States, or importing into the United States, the ’772 Accused Products with knowledge that they are especially designed or adapted to operate in a manner that infringes the ’772 Patent, and despite the fact that the infringing technology or aspects of each ’772 Accused Product are not a staple article of commerce suitable for substantial non-infringing use.

122. In addition, Ericsson’s infringement of the ’772 Patent was willful. As detailed above, KPN provided Ericsson with notice of the ’772 Patent and its infringement of it. Nevertheless, without authorization, Ericsson deliberately continued to infringe the ’772 Patent and also encouraged others to infringe the ’772 Patent as described above, including by selling and/or using ’772 Accused Products in the United States.

123. Ericsson’s acts of infringement have caused damage to KPN, and KPN is entitled to recover from Ericsson the damages it has sustained as a result of such wrongful acts in an amount to be proven at trial.

124. Further, KPN states that it is entitled to all damages to which it otherwise is entitled because it has complied with 35 U.S.C. § 287 in that it has not manufactured, used, sold, or offered for sale in the United States, or imported into the United States, any product that practices the ’772 Patent, and KPN is not aware of any licensee that has been confirmed to have manufactured, used, sold, or offered for sale in the United States, or imported into the United States, a product that

[redacted]

practices the ’772 Patent prior to KPN providing Ericsson with notice of its infringement of this patent.

COUNT 4 – INFRINGEMENT OF U.S. PATENT NO. 9,372,098 B2

125. KPN repeats and incorporates by reference each preceding paragraph as if fully set forth herein, and further states:

126. Ericsson has directly infringed, and continues to directly infringe, the ’098 Patent in violation of 35 U.S.C. § 271(a) by making, using, selling, and/or offering for sale in the United States, and/or importing into the United States, without authorization, one or more products that practice various claims of the ’098 Patent literally or under the doctrine of equivalents (hereafter “’098 Accused Products”). At a minimum, such ’098 Accused Products include all devices that operate as described in the claims of the ’098 Patent. This includes products like the Ericsson 5G Core and Radio Access Networks and Ericsson LTE Core and Radio Access Networks, including their respective eNodeB (eNB) and/or ng-eNB components supporting NB-IoT. An example of such a product is depicted below.

Massive IoT Radio Access Network

PORTFOLIO | IoT

Ericsson Massive IoT delivers Cat-M (a.k.a.” LTE-M”) and NB-IoT access technologies, supporting battery optimization, extreme coverage and Ericsson unique long cell range solutions.

Cat-M, and NB-IoT are the 3GPP IoT technologies for operation in licensed spectrum and were first defined in 3GPP release 13. These 3GPP access technologies are all capable of supporting massive cellular IoT use cases requiring 15-20 dB extended coverage as compared to today’s baselines for GSM and LTE, as well as 10+ years battery lifetimes at low device cost.

The technology choice depends on the operator network evolution plans and current coverage, as well as a selection of primary use cases. Cat-M and NB-IoT are complementary and broaden the range of available access technologies to enable massive IoT use cases requiring high coverage, very long battery live or high energy efficiency, and low complexity devices in high volumes to be...

Expand

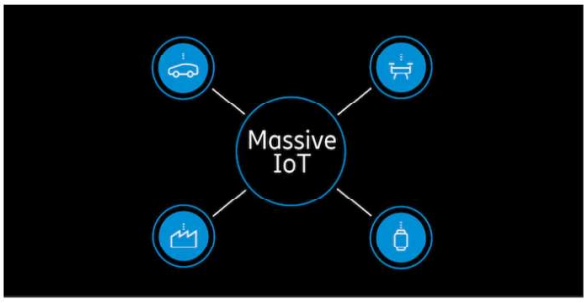

Massive IoT Radio Access Network, ERICSSON, https://www.ericsson.com/en/portfolio/networks/ericsson-radio-system/radio-system-software/massive-iot-radio-access-network (last visited Nov. 14, 2022).

127. As detailed below, the '098 Accused Products are configured by Ericsson to practice every element of at least Claim 17 of the '098 Patent literally or under the doctrine of equivalents.[4] Further, the identified components and functionality are representative of the components and functionality present in all '098 Accused Products.

128. Claim 17 of the '098 Patent recites "[a] node in a telecommunications network, said telecommunications network being configured for transferring data from a communication apparatus to a machine-to-machine server, said node being comprising: one or more processors for carrying out operations including: receiving a wireless signalling message from said communication apparatus, said received wireless signalling message having inserted in it non-signalling application data generated for a machine-to-machine function by the communication apparatus, wherein wireless signalling messages of the telecommunications network are of a message type specified for carrying signalling data for managing connections in the telecommunications network; retrieving said non-signalling application data from the received wireless signalling message; and terminating further transmission of the received wireless signalling message and transferring said retrieved non-signalling application data to said machine-to-machine server."

129. The '098 Accused Products are configured by Ericsson to comprise a node in a telecommunications network, said telecommunications network being configured for transferring data from a communication apparatus to a machine-to-machine server, said node comprising one

[4] This description is illustrative and is not intended to be an exhaustive or limiting explanation of every manner in which each '098 Accused Product infringes the '098 Patent.

or more processors for carrying out operations. Specifically, an eNB and/or a ng-eNB is a wireless access node comprising one or more processors configured by Ericsson to operate as part of a telecommunications network, including for transferring data from a communication apparatus to a machine-to-machine server as set forth below.

130. Further, each ’098 Accused Product is configured by Ericsson such that it can receive a wireless signalling message from a communication apparatus, said received wireless signalling message having inserted in it non-signalling application data generated for a machine-to-machine function by the communication apparatus, wherein wireless signalling messages of the telecommunications network are of a message type specified for carrying signalling data for managing connections in the telecommunications network. Specifically, each eNB and/or a ng-eNB is configured by Ericsson to receive an RRC ConnectionSetupComplete message that includes application data generated for a machine-to-machine function by a communication apparatus.

131. Further, each ’098 Accused Product is configured by Ericsson such that it can retrieve said non-signalling application data from the received wireless signalling message and terminate further transmission of the received wireless signalling message and transfer said retrieved non-signalling application data to said machine-to-machine server. Specifically, each eNB and/or a ng-eNB is configured by Ericsson to receive said RRC ConnectionSetupComplete message that includes application data generated for a machine-to-machine function by a communication apparatus and then transmit an initial UE message that contains such application data to the machine-to-machine server, including through an AMF or SMF component.

132. Ericsson thus directly infringed, and continues to directly infringe, each element of Claim 17 of the ’098 Patent by selling and offering to sell in the United States, and by importing into the United States, without authorization, ’098 Accused Products.

133. In addition, Ericsson indirectly infringed, and continues to indirectly infringe, Claim 17 of the ’098 Patent in violation of 35 U.S.C. § 271(b) by taking active steps to encourage and facilitate direct infringement by third parties, including partners and service providers, in the United States, through the dissemination of the ’098 Accused Products and the creation and dissemination of promotional and marketing materials, supporting materials, instructions, product manuals, and/or technical information relating to such products with knowledge and the specific intent that its efforts would result in the direct infringement of the ’098 Patent.

134. For example, Ericsson took active steps to encourage service providers and other customers to use the ’098 Accused Products in the United States in a manner that would directly infringe each element of at least Claim 17 of the ’098 Patent as described above, including by creating and distributing various training programs for use of the Ericsson 5G Radio Access Network (*Ericsson Training to Suit Your Learning Style and Competence Needs*, ERICSSON, https://www.ericsson.com/en/portfolio/training-offerings?page=learning_path&path=19 (last visited Nov. 14, 2022)) and the Ericsson LTE Radio Access Network (*Long Term Evolution (LTE) Radio Access Network (RAN) L18: Training Programs*, ERICSSON, (2018), https://mediabank.ericsson.net/deployedFiles/ericsson.com/498_03819-FAP%20130%20506_Long%20Term%20Evolution%20Radio%20Access%20Network%20L18%20Rev%20B.pdf).

135. In short, Ericsson actively induced, and continues to actively induce, the direct infringement of the ’098 Patent by service providers and other customers by distributing at least the ’098 Accused Products and, among other things, creating and distributing various programs that train customers to use them in an infringing manner.

136. Further, Ericsson took such active steps after receiving the above-described notice of the ’098 Patent and its infringement of it.

137. In addition, Ericsson has indirectly infringed, and continues to indirectly infringe, Claim 17 of the ’098 Patent in violation of 35 U.S.C. § 271(c) by selling or offering to sell in the United States, or importing into the United States, the ’098 Accused Products with knowledge that they are especially designed or adapted to operate in a manner that infringes the ’098 Patent, and despite the fact that the infringing technology or aspects of each ’098 Accused Product are not a staple article of commerce suitable for substantial non-infringing use.

138. In addition, Ericsson’s infringement of the ’098 Patent was willful. As detailed above, KPN provided Ericsson with notice of the ’098 Patent and its infringement of it. Nevertheless, without authorization, Ericsson deliberately continued to infringe the ’098 Patent and also encouraged others to infringe the ’098 Patent as described above, including by selling and/or using ’098 Accused Products in the United States.

139. Ericsson’s acts of infringement have caused damage to KPN, and KPN is entitled to recover from Ericsson the damages it has sustained as a result of such wrongful acts in an amount to be proven at trial.

140. Further, KPN states that it is entitled to all damages to which it otherwise is entitled because it has complied with 35 U.S.C. § 287 in that it has not manufactured, used, sold, or offered for sale in the United States, or imported into the United States, any product that practices the ’098 Patent, and KPN is not aware of any licensee that has been confirmed to have manufactured, used, sold, or offered for sale in the United States, or imported into the United States, a product that practices the ’098 Patent prior to KPN providing Ericsson with notice of its infringement of this patent.

COUNT 5 – INFRINGEMENT OF U.S. PATENT NO. 10,924,500 B2

141. KPN repeats and incorporates by reference each preceding paragraph as if fully set forth herein, and further states:

142. Ericsson has directly infringed, and continues to directly infringe, the ’500 Patent in violation of 35 U.S.C. § 271(a) by making, using, selling, and/or offering for sale in the United States, and/or importing into the United States, without authorization, one or more products that practice various claims of the ’500 Patent literally or under the doctrine of equivalents (hereafter “’500 Accused Products”). At a minimum, such ’500 Accused Products include all devices that operate as described in the claims of the ’500 Patent. This includes products like the Ericsson 5G Core and Radio Access Networks, including its gNb components.

143. As detailed below, the ’500 Accused Products are configured by Ericsson to practice every element of at least Claim 1 of the ’500 Patent literally or under the doctrine of equivalents.[5] Further, the identified components and functionality are representative of the components and functionality present in all ’500 Accused Products.

144. Claim 1 of the ’500 Patent recites “[a] system comprising: a telecommunications network configured to identify mobile telecommunications device and comprising a core network and a base station, wherein the base station is configured to receive radio signals from the mobile telecommunications device and further process the radio signals into processed signals and to transmit the processed signals to the core network, wherein the telecommunications network is arranged to count in the core network a number of occurrences of a certain predetermined signal associated with the mobile telecommunications device, the certain predetermined signal representing an interaction between network devices in the core network for normal processing of signals, and wherein the telecommunications network is further arranged to register when the number of occurrences of the certain predetermined signal exceeds a level indicating acceptable

[5] This description is illustrative and is not intended to be an exhaustive or limiting explanation of every manner in which each ’500 Accused Product infringes the ’500 Patent.

behaviour of the mobile telecommunications device in the telecommunications network, wherein the certain predetermined signal indicates handover of the mobile telecommunications device."

145. For example, the '500 Accused Products comprise a core network and one or more base stations configured by Ericsson to operate as a telecommunications network configured to identify a mobile telecommunications device. For example, each gNb is a wireless access node configured by Ericsson such that it is able to communicate with one or more mobile devices and the NWDAF in the core network is able to identify mobile devices that display unacceptable behavior with regard to handover.

146. Further, each '500 Accused Product is configured by Ericsson such that the base station is configured to receive radio signals from the mobile telecommunications device and further process the radio signals into processed signals and to transmit the processed signals to the core network. For example, each gNb is configured by Ericsson to receive radio signals such as attach and detach of the mobile device onto the network, signal level reports used by the network for handover decisions, requests to download a video and requests for any kind of service typically provided by the telecommunications network. Further, each gNb is configured by Ericsson such that each base station establishes the wireless channel for a mobile device upon power-up or upon handover, and establishes "Control Plane" (i.e. signaling) connectivity between the mobile device and the core network.

147. Further, each '500 Accused Product is configured by Ericsson to count in the core network a number of occurrences of a certain predetermined signal associated with the mobile telecommunications device, the certain predetermined signal representing an interaction between network devices in the core network for normal processing of signals. For example, the 5G core network is configured to count, in at least its AMF component, the number of re-registrations of a

mobile device, such re-registration attempts corresponding to a predetermined signal associated with the mobile telecommunications device.

148. Further, each ’500 Accused Product is configured by Ericsson to register when the number of occurrences of the certain predetermined signal exceeds a level indicating acceptable behaviour of the mobile telecommunications device in the telecommunications network, wherein the certain predetermined signal indicates handover of the mobile telecommunications device. For example, each is configured to monitor and register when the number of occurrences of the certain predetermined signal (e.g., unexpected mobile device location, abnormal traffic pattern, wrong destination address, etc.) indicates handover of the mobile telecommunications device.

149. Ericsson thus directly infringed, and continues to directly infringe, each element of Claim 1 of the ’500 Patent by selling and offering to sell in the United States, and by importing into the United States, without authorization, ’500 Accused Products.

150. In addition, Ericsson indirectly infringed, and continues to indirectly infringe, Claim 1 of the ’500 Patent in violation of 35 U.S.C. § 271(b) by taking active steps to encourage and facilitate direct infringement by third parties, including partners and service providers, in the United States, through the dissemination of the ’500 Accused Products and the creation and dissemination of promotional and marketing materials, supporting materials, instructions, product manuals, and/or technical information relating to such products with knowledge and the specific intent that its efforts would result in the direct infringement of the ’500 Patent.

151. For example, Ericsson took active steps to encourage service providers and other customers to use the ’500 Accused Products in the United States in a manner that would directly infringe each element of at least Claim 1 of the ’500 Patent as described above, including by creating and distributing various training programs for use of the Ericsson 5G Radio Access Network (*Ericsson Training to Suit Your Learning Style and Competence Needs*, ERICSSON,

https://www.ericsson.com/en/portfolio/training-offerings?page=learning_path&path=19 (last visited Nov. 14, 2022)).

152. In short, Ericsson actively induced, and continues to actively induce, the direct infringement of the ’500 Patent by service providers and other customers by distributing at least the ’500 Accused Products and, among other things, creating and distributing various programs that train customers to use them in an infringing manner.

153. Further, Ericsson took such active steps after receiving the above-described notice of the ’500 Patent and its infringement of it.

154. In addition, Ericsson has indirectly infringed, and continues to indirectly infringe, Claim 1 of the ’500 Patent in violation of 35 U.S.C. § 271(c) by selling or offering to sell in the United States, or importing into the United States, the ’500 Accused Products with knowledge that they are especially designed or adapted to operate in a manner that infringes the ’500 Patent, and despite the fact that the infringing technology or aspects of each ’500 Accused Product are not a staple article of commerce suitable for substantial non-infringing use.

155. In addition, Ericsson’s infringement of the ’500 Patent was willful. As detailed above, KPN provided Ericsson with notice of the ’500 Patent and its infringement of it. Nevertheless, without authorization, Ericsson deliberately continued to infringe the ’500 Patent and also encouraged others to infringe the ’500 Patent as described above, including by selling and/or using ’500 Accused Products in the United States.

156. Ericsson’s acts of infringement have caused damage to KPN, and KPN is entitled to recover from Ericsson the damages it has sustained as a result of such wrongful acts in an amount to be proven at trial.

157. Further, KPN states that it is entitled to all damages to which it otherwise is entitled because it has complied with 35 U.S.C. § 287 in that it has not manufactured, used, sold, or offered

for sale in the United States, or imported into the United States, any product that practices the ’500 Patent, and KPN is not aware of any licensee that has been confirmed to have manufactured, used, sold, or offered for sale in the United States, or imported into the United States, a product that practices the ’500 Patent prior to KPN providing Ericsson with notice of its infringement of this patent.

DEMAND FOR JURY TRIAL

158. Plaintiff hereby demands a jury trial for all issues so triable.

PRAYER FOR RELIEF

WHEREFORE, Plaintiff prays for judgment as follows:

A. Declaring that Ericsson infringed each of the Asserted Patents;

B. Awarding damages to KPN for such infringement, including enhanced damages pursuant to 35 U.S.C. § 284 and pre- and post-judgment interest without any limitation by 35 U.S.C § 287;

C. Awarding KPN its attorneys’ fees pursuant to 35 U.S.C. § 285 or as otherwise permitted by law;

D. Awarding all other costs and relief that the Court deems just and proper.

Date: November 15, 2022

Respectfully submitted,

/s/ Lexie G. White
Lexie G. White
Texas State Bar No. 24048876
lwhite@susmangodfrey.com
Savannah Ezelle
Texas State Bar No. 24125223
sezelle@susmangodfrey.com
SUSMAN GODFREY, L.L.P.
1000 Louisiana Street, Suite 5100
Houston, Texas 77002

Telephone: (713) 651-9366
Facsimile: (713) 654-6666

Andres C. Healy
Washington State Bar No. 45578
ahealy@susmangodfrey.com
SUSMAN GODFREY L.L.P.
401 Union Street, Suite 3000
Seattle, WA 98101-3000
Telephone: (206) 505-3843
Facsimile: (206) 516-3883

Tamar Lusztig (NY 5125174)
tlusztig@susmangodfrey.com
SUSMAN GODFREY L.L.P.
1301 Avenue of the Americas, 32nd Fl.
New York, NY 10019
Telephone: (212) 336-8330
Facsimile: (212) 336-8341

Attorneys for Plaintiff Koninklijke KPN N.V.

CERTIFICATE OF SERVICE

I hereby certify that a copy of the foregoing document was served on all counsel of record by email on this 15th day of November, 2022.

/s/ Lexie G. White

.