Europäisches Patentamt
European Patent Office
Office européen des brevets

Espacenet

JP2003257161A INFORMATION EDITING DEVICE, INFORMATION EDITING METHOD, PROGRAM FOR EDITING INFORMATION, AND INFORMATION RECORDING MEDIUM

Applicants: SANYO ELECTRIC CO,SHARP KK,VICTOR COMPANY OF JAPAN,PIONEER ELECTRONIC CORP,HITACHI LTD

Inventors: KANAI YUICHI,HORI YOSHIHIRO,ONO RYOJI,OISHI TAKESHI,TADA KENICHIRO,TOZAKI AKIHIRO,HIRAI TATSUYA

Classifications:

IPC ***G11B27/02; G11B27/034; G11B27/10; G11B27/11; G11B27/32; G11B27/34; G11B27/36; H04N5/76; H04N5/91;*** (IPC1-7): G11B27/034; G11B27/34; H04N5/76; H04N5/91;

CPC **G11B27/00 (KR); G11B27/034 (EP,KR,US); G11B27/105 (EP,US); G11B27/326 (EP,US); G11B27/329 (EP,US); G11B27/34 (EP,US); H04N5/76 (KR); H04N5/91 (KR);** G11B2220/20 (EP,US);

Priorities: JP2002107158A 2002-03-05

Application: JP2002107158A·2002-03-05

Publication: JP2003257161A·2003-09-12

Published as: **AU2003220876A1; CN100501862C; CN1647201A; EP1482508A1; EP1482508A4; EP1482508B1;** JP2003257161A;**KR100725446B1; KR20040086467A; US2005152672A1; US7421188B2; WO03075276A1**

INFORMATION EDITING DEVICE, INFORMATION EDITING METHOD, PROGRAM FOR EDITING INFORMATION, AND INFORMATION RECORDING MEDIUM

Abstract

PROBLEM TO BE SOLVED: To provide an information editing device capable of preventing a thumbnail image indicating the contents of recording information recorded in an information recording medium from being accidentally changed by an erroneous operation by a user or the like. SOLUTION: The information editing device is provided with a decision means 8 for deciding the permission of the change of the thumbnail image on the basis of change permission information indicating permission of the change of the thumbnail image indicating the contents of the recording information recorded in the recording medium 1. When it is decided that the change is not allowed by the decision means 8, the change of the thumbnail image is inhibited. COPYRIGHT: (C)2003,JPO

JP2003257161A INFORMATION EDITING DEVICE, INFORMATION EDITING METHOD, PROGRAM FOR EDITING INFORMATION, AND INFORMATION RECORDING MEDIUM

Data originating from sources other than the EPO may not be accurate, complete, or up to date.

The wording below is an initial machine translation of the original publication. To generate a version using the latest translation technology, go to the original language text and use Patent Translate.

[0001] The present invention belongs to the technical field of information editing apparatus, information editing method, information editing program and information recording medium. More specifically, the present invention includes at least image information recorded on the recording medium. The present invention belongs to the technical fields of an information editing apparatus, an information editing method, an information editing program, and an information recording medium for editing a reproduction mode of recorded information.

[0002] 2. Description of the Related Art Conventionally, this type of information editing apparatus is disclosed in Japanese Patent Laid-Open No. 2000-353375. This information editing device is an information editing device that edits the reproduction mode of recorded information recorded on an optical disc including one or a plurality of images, and is a part that includes one or a plurality of images as part of the recorded information. Is selected from the recorded information, the playback timing of the selected part is specified, the image included in the part is extracted as a representative image indicating the part, and the specified playback timing and the extracted representative image are played. A list is recorded on the optical disc separately from the recording information.

[0003] That is, the format of a conventional information editing apparatus records information indicating the reproduction position of recorded information on an optical disc as a recording medium, and records information (hereinafter also referred to as content) recorded on the optical disc from the recorded information. A thumbnail image showing the contents was generated.

[0004] However, in the above-described conventional information editing apparatus, although the thumbnail image of the content recorded on the optical disc can be reset, the thumbnail image can be reset, but cannot be reset. There was no means to clearly show that. Therefore, in the conventional information editing apparatus, there is a possibility that the thumbnail image set by the user or the content holder may be inadvertently changed due to an erroneous operation by the user.

[0005] The present invention has been made in view of the above circumstances, and an information editing apparatus, an information editing method, and an information editing program capable of preventing a thumbnail image indicating the contents of recorded information from being inadvertently changed. And an information recording medium.

[0006] In order to solve the above-mentioned problems, the invention according to claim 1 is an information editing method for editing a reproduction mode of recorded information recorded on a recording medium including at least image information. The apparatus further comprises a determination unit that determines whether or not the thumbnail image can be changed based on changeability information indicating whether or not the thumbnail image indicating the content of the recording information recorded on the recording medium can be changed. The change of the thumbnail image is prohibited when it is determined that the change is impossible.

[0007] With this configuration, according to the first aspect of the present invention, the recording information is prohibited by prohibiting the change of the thumbnail image when the determination unit determines that the change cannot be made based on the change enable / disable information indicating whether the thumbnail image can be changed. It is possible to prevent the thumbnail image indicating the contents of the image from being inadvertently changed. As a result, it is possible to protect the thumbnail image and recording information by the content holder and protect the thumbnail image by the user.

[0008] In order to solve the above-described problem, in the invention according to claim 2, in the information editing apparatus according to claim 1, the thumbnail image cannot be changed when the determination unit determines that the change cannot be made. And a generation circuit for generating a display signal for displaying a warning to that effect.

[0009] With this configuration, in the invention described in claim 2, when it is determined that the change is impossible by the determination unit, a warning that the change of the thumbnail image is not possible is displayed, so that the thumbnail image cannot be changed for the user. It can be clearly recognized that there is.

[0010] In order to solve the above-mentioned problem, the invention according to claim 3 is the information editing apparatus according to claim 1, further comprising: a changing unit that changes the thumbnail image when the determining unit determines that the change is possible. It is characterized by having.

[0011] With this configuration, according to the third aspect of the invention, when it is determined that the change is possible by the determination unit, the thumbnail image is changed, so that the user can select whether the thumbnail image is protected or not protected. Image setting operability can be improved.

[0012] In order to solve the above-mentioned problems, the invention according to claim 4 is an information editing method for editing a reproduction mode of recorded information recorded on a recording medium including at least image information, and recorded on the recording medium. A determination step for determining whether or not the thumbnail image can be changed based on changeability information indicating whether or not the thumbnail image can be changed. The determination step determines when the change is impossible. It is characterized by prohibiting the change of thumbnail images.

[0013] With this configuration, in the invention described in claim 4, the recording information is prohibited by prohibiting the change of the thumbnail image when it is determined that the change is impossible by the determination step based on the change enable / disable information indicating whether the thumbnail image can be changed. It is possible to prevent the thumbnail image indicating the contents of the image from being inadvertently changed. As a result, it is possible to protect the thumbnail image and recording information by the content holder and protect the thumbnail image by the user.

[0014] In order to solve the above-described problem, in the information editing method according to claim 4, the thumbnail image cannot be changed when the determination unit determines that the change cannot be made. A generation step of generating a display signal for displaying a warning to that effect.

[0015] With this configuration, in the invention according to claim 5, when it is determined that the change is impossible by the determination step, a warning that the change of the thumbnail image is impossible is displayed, so that the user cannot change the thumbnail image. It can be clearly recognized that there is.

[0016] In order to solve the above-mentioned problem, the invention according to claim 6 is the information editing method according to claim 4, further comprising a changing step of changing the thumbnail image when it is determined by the determining means that the change is possible. It is characterized by having.

[0017] With this configuration, in the invention described in claim 6, when it is determined that the change is possible in the determination step, the thumbnail image is changed, whereby the user can select whether the thumbnail image is protected or unprotected, and the user can select the thumbnail. Image setting operability can be improved.

[0018] In order to solve the above-mentioned problem, the invention described in claim 7 is characterized in that a computer included in an information editing apparatus for editing a reproduction mode of recorded information recorded on a recording medium including at least image information includes the recording It functions as a determination unit that determines whether or not the thumbnail image can be changed based on changeability information indicating whether or not the thumbnail image can be changed, which indicates the content of the recorded information recorded on the medium, and also functions as the determination unit. The computer is caused to function so as to prohibit the change of the thumbnail image when it is determined by the determination means that the change is impossible.

[0019] With this configuration, in the invention described in claim 7, the computer functions so as to prohibit the change of the thumbnail image when it is determined that the change cannot be made by the determination means, so that the thumbnail image indicating the content of the recorded information is not displayed. It is possible to prevent a change in preparation. As a result, it is possible to protect the thumbnail image and recording information by the content holder and protect the thumbnail image by the user.

[0020] In order to solve the above-mentioned problem, the invention according to claim 8 is the information editing program according to claim 7, wherein when it is determined that the computer cannot be changed by the

determination means, the thumbnail image It is characterized by functioning as a generation means for generating a display signal for displaying a warning that the change is impossible.

[0021] According to this configuration, in the invention described in claim 8, when it is determined that the change is not possible by the determination unit, the computer functions so as to display a warning that the change of the thumbnail image is impossible. It is possible to clearly recognize that the image cannot be changed.

[0022] In order to solve the above-described problem, the invention according to claim 9 is the information editing program according to claim 7, wherein the thumbnail image is displayed when the computer determines that the computer can be changed. It is made to function as a change means to change.

[0023] With this configuration, in the invention described in claim 9, when the determination unit determines that the change is possible, the computer functions to change the thumbnail image, so that the user can select whether the thumbnail image is protected or not protected. This makes it possible to improve the operability of setting thumbnail images by the user.

[0024] In order to solve the above-described problem, the invention according to claim 10 is characterized in that the information editing program according to any one of claims 7 to 9 is recorded.

[0025] When the information editing program according to claim 7 is recorded, the computer functions so as to prohibit the change of the thumbnail image when the determination means determines that the change cannot be made. It is possible to prevent the thumbnail image shown from being inadvertently changed. As a result, it is possible to protect the thumbnail image and recording information by the content holder and protect the thumbnail image by the user.

[0026] When the information editing program according to claim 8 is recorded, the computer functions to display a warning that the thumbnail image cannot be changed when it is determined that the change cannot be made by the determination unit. As a result, the user can clearly recognize that the thumbnail image cannot be changed.

[0027] In a case where the information editing program according to claim 9 is recorded, the computer functions to change the thumbnail image when it is determined that the change is possible by the determination unit, so that the user can protect the thumbnail image or Non-protection can be selected, and the operability of setting thumbnail images by the user can be improved.

[0028] DESCRIPTION OF THE PREFERRED EMBODIMENTS Next, preferred embodiments of the present invention will be described with reference to the drawings.

[0029] In the embodiment described below, AV (Audio Visual) information distributed via a network such as the Internet to a hard disk that can be carried and has been subjected to copyright protection processing (When the information editing apparatus according to the present invention is applied to an information recording apparatus capable of both recording processing (including music information or image information) and editing processing on the recorded AV information. It is an embodiment.

[0030] In the following description, it is assumed that the AV information is distributed in accordance with a transport stream standard in the MPEG (Moving Picture Experts Group) 2 standard, which is a well-known standard for moving image compression technology. .

[0031] (I) Embodiment of Recording Format First, before specifically describing the information recording apparatus according to the embodiment, the logical format used when the AV information is recorded on the hard disk by the information recording apparatus. An outline of the recording format will be described with reference to FIGS. 1 to 7 are diagrams schematically and hierarchically showing the recording format after the AV information is recorded on the hard disk based on the recording format.

[0032] The recording format shown in FIGS. 1 to 7 is a logical recording format used when recording the AV information of the present embodiment on the hard disk, and the physical recording format used for the recording is as follows. Well-known physical formats used for hard disks are used as they are.

[0033] First, an outline of various concepts employed in the recording format in order to efficiently manage the content and recording mode of the recorded AV information will be described.

[0034] First, in the following recording format, the concept of a program is used as a unit for handling recorded AV information. That is, the program refers to one piece of AV information recorded in the hard register continuously in time.

[0035] Here, when the distributed AV information is analog information, for example, when one program in television broadcasting is continuously recorded, the one program becomes a program, and only a part of the program is continuously recorded. If the program is recorded, only the continuously recorded portion becomes one program, and when a plurality of programs are recorded simultaneously and continuously, all the plurality of continuously recorded programs become one program. . On the other hand, when the AV information is digital information, for example, when the AV information is distributed as BS (Broadcast Satlight) digital broadcast, one event in the BS digital broadcast becomes one program. Is defined as

[0036] Secondly, in the following recording format, the program list is used in order to logically create a new program by allowing the user (the user viewing the recorded AV information) to freely edit the recorded AV information. The concept is used. In other words, the program list is a list as a set of instruction information (generally also referred to as pointers) for identifying one program as a whole or a part thereof and distinguishing it from another program or another part. In addition, for each program list, a representative image (hereinafter referred to as a thumbnail image) representing the contents of AV information (image information) included in the program list can be defined.

[0037] Therefore, for example, when a user edits a part of one recorded program and a part of another program so as to continuously reproduce in this order, the part of the one program is The user himself / herself creates a program list by combining the instruction information to be displayed and the instruction information indicating a part of the other program in this order. Further, by adopting the concept of this program list, it is possible to reproduce AV information in a reproduction mode desired by the user without changing the recording order or the like in the AV information itself recorded on the hard disk first. It becomes.

[0038] Here, as described above, the program list includes a program list (user-defined program list) set by the user himself / herself with reference to the recorded AV information, and a distributor (vendor) that distributes the recorded AV information.) Is defined in advance as a program list (vendor definition program list).

[0039] Further, the above-described thumbnail image includes a vendor-defined thumbnail image provided by the vendor in advance and distributed together with the AV information, and a user definition newly provided by the user after the distributed AV information is recorded on the hard disk. A thumbnail image is defined.

[0040] Third, in the following recording format, a user-defined program list or a vendor definition created based on a reproduction mode desired by the user (more specifically, a reproduction order for each AV information specified by the user) The concept of a program set is used as an aggregate including a plurality of program lists. Here, the program set includes an initial program set used for reproducing the AV information (program) first recorded on the hard disk in the recorded order (the program list included in the initial program set is the vendor definition). And a user-defined program set including the user-defined program list.

[0041] Fourthly, in the following recording format, the concept of an index is used as a kind of the instruction information described above. That is, the index is instruction information for specifying the whole program or a part thereof and distinguishing it from other programs or other parts, and to improve the ease of handling AV information by the user. Is provided. At this time, the index defines a vendor-defined index distributed by the distributor in advance and a user-defined index newly provided by the user after the distributed AV information is recorded on the hard disk. ing. The vendor-defined index is distributed together with the AV information in the form of an index file, while the user-defined index is expressed as the program list.

[0042] Next, a logical recording format according to this embodiment will be described based on the various concepts described above.

[0043] As shown in FIG. 1, on the hard disk 1 after necessary AV information is recorded, the recorded AV information, which is management information related to the entire program recorded on the one hard disk 1, is reproduced. The management information MI that is referred to first, the initial program set information DPSI that is management information related to the initial program set, and the image information corresponding to

the vendor-defined thumbnail image are specified by the name of the image information itself. Vendor-defined thumbnail image information DFTN included therein, user-defined program set management information UDPM that is management information related to the above-described user-defined program set, and image information corresponding to the above-described user-defined thumbnail image, Uses identified and included by the name of the image information itself User-defined thumbnail image information UDTN, program information PIF which is management information corresponding to each of the above-mentioned programs, AV stream information AVD which is the actual AV information distributed and recorded on the hard disk 1, and the AV information Address information indicating the recording position of the I picture on the hard disk 1 in one access unit constituted by image information corresponding to one I picture (Intra-coded Picture) included, and the one access unit Access unit reference information ACU that includes information indicating the total amount of information of an I picture divided for each access unit, and license that is information for managing the license status of recorded AV information Management information CIF and the vendor A primary index IDX, preliminary thumbnail image information TMN which is image information corresponding to a preliminary image which is an image used as a thumbnail image but which is neither a vendor-defined thumbnail image nor a user-defined thumbnail image, and a hard disk User that is management information relating to each of the user-defined program sets defined in FIG. 1 after AV information is recorded (in the case of FIG. 1, it is assumed that there are n user-defined program sets). Definition program set information UDIF1 to UDIFn are recorded.

[0044] Next, as shown in FIG. 1, the management information MI includes hard disk identification information MID (12 bytes) for identifying the hard disk 1 itself from other hard disks, and version information VRN (2 bytes) indicating the version of the hard disk 1.), Character type information CHS (2 bytes) indicating the type (attribute) of characters included in the recorded AV information, and a name indicating the name itself when a name is assigned to the hard disk 1 itself. Information REP (128 bytes), last access program set number RSM that is the number of the program set that was reproduced last when the reproduction processing of the AV information recorded on the hard disk 1 was completed, and the initial program set Information DPSI file name (ie, so-called path name) Specifically, the name information DPP in which the name “initial program set information DPSI” itself is described and the name of the user-defined program set management information UDPM as a file (similarly the path) The name is a name, and specifically includes name information UMP in which the name “user-defined program set management information UDPM” is described.

[0045] Next, a detailed configuration of the initial program set information DPSI will be described with reference to FIG.

[0046] As shown in FIG. 2, the initial program set information DPSI includes initial program set general information DPI including name information indicating the name of the initial program set, and a plurality of initial program set information DPSI. A plurality of vendor-defined program list information DPL1 to DPLn, which are information related to the vendor-defined program list.

[0047] The initial program set general information DPI includes name information DPST (80 bytes), which is the name of the initial program set, and other information (information indicating the attributes of the initial program set, etc.) as the initial program set general information DPI. Other information DETC (148 bytes) including the memo information and the like, and an initial program which is information regarding image information corresponding to a thumbnail image corresponding to the initial program set (also a thumbnail image representing the entire hard disk 1). Set representative image information PRT (156 bytes) and name information TPP (128 bytes) in which the name of image information corresponding to the initial program set representative image is described only when a thumbnail image specifier valid flag described later is valid. And are included.

[0048] Further, the initial program set representative image information PRT includes attribute information DTT (1 byte) indicating the attribute of the initial program set representative image, and preliminary information RSV which is meaningless information as the initial program set representative image information PRT. (3 bytes) and image information corresponding to the initial program set representative image only when the later-described thumbnail image specifier valid flag is valid (in this case, only the I picture in the recorded AV information is applicable). Initial program set representative image recording position information DTPS (8 bytes) in which the recording position on the hard disk 1 (the first recording position of the information as the I picture) is described, and a thumbnail image specifier valid flag described later are valid. Information amount of image information corresponding to the initial program set representative image only when there is Initial program set representative image information amount information DTSZ (4 bytes) describing the number of bytes), name information DTP (128 bytes) describing the name of the image information itself corresponding to

the initial program set representative image, Offset position information in which the position of the image information corresponding to the initial program set representative image in the vendor-defined thumbnail image information DFTN (specifically, the number of offset bytes from the head of the vendor-defined thumbnail image information DFTN) is described. DFT (4 bytes), initial program set representative image information amount information DLT (4 bytes) in which the information amount (number of bytes) of image information corresponding to the initial program set representative image is described, and saved as a file Water in the image information corresponding to the initial program set representative image Horizontal information amount information DTH (2 bytes) in which the information amount in the direction is described, and vertical information amount in which the information amount in the vertical direction in the image information corresponding to the initial program set representative image stored as a file is described Information DTV (2 bytes).

[0049] Here, the initial program set representative image recording position information DTPS and the initial program set representative image information amount information DTSZ are specifically any one of the still images included in the AV stream information AVD. This shows the recording position and information amount (this still image is used as an initial program set representative image), while name information DTP, offset position information DFT, initial program set representative image information amount information DLT, and horizontal information amount The information DTH and the vertical information amount information DTV indicate a still image specified and recorded by the name in the vendor-defined thumbnail image information DFTN.

[0050] Next, the attribute information DTT includes permission information REL as changeability information indicating whether or not to permit resetting of the initial program set representative image, the initial program set representative image recording position information DTPS, and the initial program. The thumbnail image specifier valid flag VLD indicating whether or not still image designation using the set representative image information amount information DTSZ is valid, and an image other than AV information to which an image used as an initial program set representative image has been distributed Attribute information ETFT indicating the type (attribute) of image information corresponding to the image when selected from the information is included. At this time, regarding the permission information REL, “0” is described as the value when permitting resetting of the initial program set representative image, and “1” as the value when not permitting the resetting. Is described. The thumbnail image specifier valid flag VLD has a value “1” when the still image designation using the initial program set representative image recording position information DTPS and the initial program set representative image information amount information DTZ is valid. Is described, and “0” is described as the value when the designation is invalidated.

[0051] Next, each vendor definition program list information DPL includes name information DPLT (80 which is a name that can be changed by the user) corresponding to the vendor definition program list information DPL. Bytes), other information DPTC (108 bytes) which is other information (including memo information etc. indicating the attribute of the vendor definition program list, etc.) as the vendor definition program list information DPL, and the vendor definition program list Vendor definition program list representative image information PPRT (156 bytes), which is information related to image information corresponding to the thumbnail image corresponding to, and the name of program information to be described later corresponding to the program included in the vendor definition program list are described. Name information PPT (128 Data), start position information STP (8 bytes) describing the recording start position on the hard disk 1 of the program to be accessed based on the vendor-defined program list, and the program to be accessed based on the vendor-defined program list End position information ETP (8 bytes) describing the recording end position on the hard disk 1 and preliminary information RSV (4 bytes), which is meaningless information as vendor-defined program list information DPL, are included. .

[0052] Further, the vendor definition program list representative image information PPRT is attribute information PTT (1 byte) indicating the attribute of the vendor definition program list representative image and meaningless information as the vendor definition program list representative image information PPRT. Preliminary information RSV (3 bytes) and image information corresponding to the representative image of the vendor definition program list only when a thumbnail image specifier valid flag (to be described later) is valid (in this case, only the I picture in the recorded AV information is included). Vendor-defined program list representative image recording position information PTPS (8 bytes) in which the recording position (the corresponding first) recording position on the hard disk 1 is described, and a thumbnail image specifier described later. Vendor-defined program only when valid flag is valid Vendor definition program list representative image information amount information PTSZ (4 bytes) in which the information amount (number of bytes) of image information corresponding to the strike representative image is described, and the name of

the image information itself corresponding to the vendor definition program list representative image And the position of the image information corresponding to the vendor definition program list representative image in the vendor definition thumbnail image information DFTN (specifically, the vendor definition thumbnail image information DFTN). Vendor definition program list representative describing offset position information PFT (4 bytes) describing offset byte count from the beginning) and information amount (byte count) of image information corresponding to vendor definition program list representative image Image information amount information PLT (4 bytes) and file The horizontal information amount information PTH (2 bytes) in which the amount of information in the horizontal direction in the image information corresponding to the existing vendor definition program list representative image is described, and the vendor definition program list representative image saved as a file And vertical information amount information PTV (2 bytes) in which the amount of information in the vertical direction in the corresponding image information is described.

[0053] Here, the vendor definition program list representative image recording position information PTPS and the vendor definition program list representative image information amount information PTSZ are specifically any one of the still images included in the AV stream information AVD. One recording position and information amount (this still image is used as a vendor definition program list representative image), on the other hand, name information PTP, offset position information PFT, vendor definition program list representative image information amount information PLT The horizontal information amount information PTH and the vertical information amount information PTV indicate the still image specified and recorded by the name in the vendor definition thumbnail image information DFTN.

[0054] Next, the attribute information PTT includes permission information REL as change permission / inhibition information indicating whether or not to permit resetting of the vendor definition program list representative image, the vendor definition program list representative image recording position information PTPS, and The thumbnail image specifier valid flag VLD indicating whether or not still image designation using the vendor definition program list representative image information amount information PTSZ is valid, and an image used as the vendor definition program list representative image have been distributed. Attribute information ETFT indicating the type (attribute) of image information corresponding to the image when selected from image information other than AV information is included. At this time, regarding the permission information REL, “0” is described as the value when permitting the resetting of the vendor-defined program list representative image, and “1” is set as the value when the resetting is not permitted. Is described. As for the thumbnail image specifier valid flag (hereinafter also referred to as a content pointer of the thumbnail specifier) VLD, a still image using the vendor definition program list representative image recording position information PTPS and the vendor definition program list representative image amount information PTSZ. When the designation is valid, “1” is described as the value, and when the designation is invalid, “0” is described as the value.

[0055] Next, the detailed configuration of the user-defined program set management information UDPM will be described with reference to FIG.

[0056] As shown in FIG. 3, the user-defined program set management information UDPM includes user-defined program set general information UDPSI in which total number information indicating the total number of the user-defined program sets is described, and the user-defined program sets. Name information UDPT1 in which the names of the program set information UDIF1 to UDIFn themselves (specifically, for example, the name itself of “user-defined program set information UDIF1”) is described in association with each user-defined program set information UDIF. To UDPTn.

[0057] The user-defined program set information UDIF whose name is described by one name information UDPT includes name information indicating the name of the user-defined program set as shown in FIG. User-defined program set general information UPI and a plurality of user-defined program list information UPL1 to UPLn, which are information related to a plurality of user-defined program lists included in the user-defined program set. Here, the user-defined program set general information UPI has the same hierarchical structure as the initial program set general information DPI explained in FIG. 2, while the user-defined program list information UPL is also explained in FIG. The vendor-defined program list information DPL has the same hierarchical structure.

[0058] Next, the detailed structure of the program information PIF will be described with reference to FIGS.

[0059] First, as shown in FIG. 4, the program information PIF includes program general information PI in which general information about the corresponding program is described, and program license information CI in which

information about the license corresponding to the program is described. And index information II that is information relating to an index to which the program belongs, access unit information ACUI that is information relating to an access unit included in the program, and a packet that constitutes a transport stream that is a format when the AV information is distributed And allocation unit information ALUI, which is information related to allocation units including a preset number.

[0060] Next, a detailed configuration of the program general information PI will be described.

[0061] As shown in FIG. 4, the program general information PI is the source of the program (that is, whether the program general information PI is obtained by receiving an analog broadcast or BS digital broadcast). Program source information PST (1 byte) indicating other information PFTC (143 bytes) which is other information as program general information PI, and material information (that is, any of image, sound or data) constituting the program Program material information PESI (104 bytes), which is information related to the data (generally referred to as an elementary stream), and information indicating the recording mode when the program is recorded on the hard disk 1 And state information PRS.

[0062] The program material information PESI includes program material general information PGSI, which is general information as the program material information PESI, and material information (for example, a plurality of material information constituting the program). A plurality of pieces of information describing the positions on the hard disk 1 on which information indicating the contents of a plurality of material information groups preliminarily configured and distributed by image information and audio information to be reproduced in parallel is recorded. The material information group search pointers CGSP1 to CGSPn, a plurality of material information group information CGIF1 to CGIFn in which information indicating the contents of the material information group is specifically described, and the amount of information as the entire program material information PESI are adjusted. And padding data PD.

[0063] Next, the program material general information PGSI includes attribute information ATB (1 byte) indicating the attribute of the program and pointer number information SPN (number of material information group search pointers CGSP included in the program material information PESI). 1 byte).

[0064] Further, one material information group search pointer CGSP indicates the respective positions on the hard disk 1 in which information indicating the contents of the corresponding material information group is recorded, and the hard disk 1 in which the head of the program material information PESI is recorded. It includes group information start address information CGSA (1 byte) described as relative address information from the upper position.

[0065] Next, one material information group information CGIF is obtained by material information number information NES (1 byte) in which the number of material information indicating the number of information on material information included in the material information group information CGIF is described. It is configured.

[0066] The material information ESI includes preliminary information RSV (1 byte) which is meaningless information as the material information ESI, and the type of the material information (that is, whether the material information is image information or audio information). Type information CTY indicating the type) and material packet identification information CPD including packet identification information PID for identifying the packet including the material information, and the identified type are specifically described. Type description information CMD.

[0067] Next, a detailed configuration of the index information II will be described with reference to FIG.

[0068] As shown in FIG. 5, the index information II includes index general information IGI, which is general information as the index information II, and the start position on the hard disk 1 for each of the plurality of indexes. A plurality of pieces of index entry information IE1 to IEn.

[0069] The index general information IGI includes index number information NI (1 byte) in which information indicating the number of indexes included in the program is described.

[0070] One index entry information IE includes index description information IDC (100 bytes) including other information about the index, and index representative image information IPRT (information about image information corresponding to the thumbnail image corresponding to the index). 156 bytes), index start position information ISP indicating the start position of the area on the hard disk 1 in which the program included in the

program list corresponding to the index is recorded, and the program included in the program list corresponding to the index And index end position information IEP indicating the end position of the recorded area on the hard disk 1.

[0071] The index representative image information IPRT includes attribute information ITT (1 byte) indicating the attribute of the index representative image, preliminary information RSV (3 bytes) that is meaningless information for the index representative image information IPRT, Only when the thumbnail image specifier valid flag described later is valid, the recording position of the image information corresponding to the index representative image (in this case, only the I picture in the recorded AV information is applicable) on the hard disk 1 The index representative image recording position information ITPS (8 bytes) in which the first recording position of information as an I picture) is described and an image corresponding to the index representative image only when a thumbnail image specifier valid flag described later is valid Index representative that describes the amount of information (number of bytes) Image information amount information ITSZ (4 bytes), name information ITP (128 bytes) describing the name of the image information itself corresponding to the index representative image, and the user-defined thumbnail of the image information corresponding to the index representative image Offset position information IFT (4 bytes) in which a position in the image information UDTN (specifically, the number of offset bytes from the head of the user-defined image information UDTN) is described, and image information corresponding to the index representative image The index representative image information amount information ILT (4 bytes) in which the information amount (number of bytes) is described, and the horizontal information amount in the image information corresponding to the index representative image stored as a file are described. Horizontal information amount information ITH (2 bytes) and index saved as a file Amount vertical information amount of information in the vertical direction of image information corresponding to the scan representative image is described information ITV and (2 bytes) contains.

[0072] Here, the index representative image recording position information ITPS and the index representative image information amount information ITSZ are specifically any one of the still images included in the AV stream information AVD (this still image). Are used as index representative images), while name information ITP, offset position information IFT, index representative image information amount information ILT, horizontal information amount information ITH, and vertical information amount information. The ITV indicates a still image specified and recorded by a name in the user-defined thumbnail image information UDTN.

[0073] Next, in the attribute information ITT, still information using permission information REL indicating whether or not to permit resetting of the index representative image, the index representative image recording position information ITPS, and the index representative image information amount information ITSZ is used. Corresponding to the thumbnail image specifier validity flag VLD indicating whether or not the designation of the image is valid, and the image when the image used as the index representative image is selected from image information other than the distributed AV information Attribute information ETFT indicating the type (attribute) of image information to be included. At this time, regarding the permission information REL, “0” is described as the value when permitting the resetting of the index representative image, and “1” is described as the value when the resetting is not permitted. Has been. The thumbnail image specifier valid flag VLD is described with “1” as the value when the designation of the still image using the index representative image recording position information PTPS and the index representative image amount information ITSZ is valid. When the designation is invalidated, “0” is described as the value.

[0074] Next, the access unit information ACUI and the allocation unit information ALUI will be described with reference to FIG.

[0075] First, the access unit information ACUI includes access unit header ACUH as header information and name information ACIP1 to ACIPn (128 respectively) in which the name of each access unit information included in the access unit reference information ACU is described. Byte).

[0076] Next, the access unit header ACUH includes attribute information ACUT in which attributes of the access unit information are described, and spare information RSV (7 bytes) that is meaningless information as the access unit header ACUH. Yes.

[0077] The attribute information ACUT includes an access unit valid flag AVLD (1 bit) indicating whether or not recording or reproduction is performed in units of access units, and information indicating the total number of access units recorded on the hard disk 1. The number of units described NACU (3 bits), spare information RSV (3 bits) which is meaningless information as attribute information ACUT, and an access unit in which

information indicating how to handle the access unit is described Handling information ACUM (1 bit). At this time, when only the time information related to the allocation unit is recorded for the access unit valid flag AVLD, “0” is described as the value thereof, and any one of the time information related to the allocation unit and the time information related to the access unit is recorded. In the case where a message is recorded, “1” is described as its value. Further, the access unit handling information ACUM has a value of “when the access unit is handled using display control time information (also referred to as a presentation time stamp) distributed in the AV information. “0” is described, and “1” is described as the value when the access unit is handled using the arrival (reception) time of the packet distributed including the head.

[0078] Next, the allocation unit information ALUI includes allocation unit general information ALGI, which is general information as allocation unit information, and a plurality of allocation unit entry information ALE1 in which time information about each allocation unit is described for each allocation unit. Thru | or ALEn.

[0079] The allocation unit general information ALGI indicates allocation unit information amount information ALSZ (4 bytes) indicating the number of bytes of information included in one allocation unit, and the name of AV information included in the allocation unit. Name information ADP (128 bytes) in which information is described and unit number information NALU (4 bytes) in which information indicating the total number of allocation units recorded in the hard disk 1 are described.

[0080] Further, one allocation unit entry information ALE includes start time stamp information SATS (4 bytes) in which information indicating the time when the first packet included in the corresponding allocation is received, and the corresponding allocation. And end time stamp information EATS (4 bytes) in which information indicating the time when the last included packet is received is described.

[0081] Finally, a detailed configuration of the AV stream information AVD will be described with reference to FIG. Only the recording format in which the AV stream information AVD is physically analyzed is shown in FIG.

[0082] First, as shown in FIG. 7, the AV stream information AVD is recorded on the hard disk 1 in a state where one or a plurality of the allocation units ALU are collected. The information amount of one allocation unit ALU is, for example, about 1 megabyte, and is composed of one allocation unit ALU or a plurality of aligned units AU.

[0083] At this time, one aligned unit AU is composed of 12 sectors (one sector is 512 bytes), and is composed of four aligned subunits ASU. One aligned subunit ASU is composed of eight recording packets RP. One recording packet RP is obtained by adding a 4-byte recording packet header RPH before a packet (the amount of information included in the transport stream is constant at 188 bytes) PKT in the transport stream. Here, the recording packet header RPH includes a flag CF (1 bit) in which information indicating whether or not the AV information included and distributed in the packet PKT is encrypted, and the recording packet header Preliminary information RSV (2 bits) which is meaningless information as RPH, reception time information ATS1 which is information indicating the reception time of the packet PKT measured at a frequency of 90 kHz, and packet PKT which is timely measured at a frequency of 27 MHz And reception time information ATS2 which is information indicating the reception time of.

[0084] By adopting the logical recording format as described above, recording / editing processing according to an embodiment described later becomes possible.

[0085] (II) Embodiment of Information Recording Device Next, the configuration and operation of an information recording device that performs AV information recording / editing processing based on the above-described recording format will be described.

[0086] First, the overall configuration and outline operation of the information recording apparatus will be described with reference to FIG.

[0087] As shown in FIG. 8, the information recording apparatus S according to the embodiment is directly connected to an external television apparatus TV and is connected to an external video server SV via a network IT such as the Internet. .

[0088] Then, the hard disk 1 as a recording medium on which AV information is recorded in the recording format described above, the digital broadcast receiving circuit 2, the demultiplexer 3, the video decoder 4, the

audio decoder 5, the data decoder 6, and the modem 7 And a controller 8 as a judging means and a changing means, an analog AV receiving circuit 9, a video encoder 10, an audio encoder 11, a multiplexer 12, a display section 13, an operating section 14, and a kind of solid recording medium. A memory card 15, a digital interface 16, an OSD unit 20 as a generation circuit, and an adder circuit 21 are included.

[0089] The operation unit 14 includes, for example, a play key 14a for reproducing recorded information recorded in the hard disk 1 as shown in FIG. 9 using a remote controller, and contents of the recorded information recorded in the hard disk 1. A thumbnail image to be displayed is selected from images corresponding to the image information, and the multi-dial 14b is rotated and searched to select the thumbnail image from images other than the image corresponding to the image information in the record information, and the multi-dial 14b , And an enter key 14c that is pressed to determine when reproducing a selected thumbnail image, a thumbnail image-attached content list display button 14d, and a thumbnail setting operation start button 14e.

[0090] Further, the controller 8 determines whether or not the thumbnail image can be changed based on the permission information REL indicating whether or not the thumbnail image can be changed, which indicates the content of the recorded information recorded in the hard disk 1. The OSD unit 20 as a generation circuit generates a display signal for prohibiting the change of the thumbnail image and displaying a warning that the change of the thumbnail image is impossible, and the generated display signal is generated by the addition circuit 21. If necessary, it is added to the output of the video decoder 4 and displayed on the television set TV. On the other hand, when it is determined that the change is possible, the thumbnail image is changed.

[0091] Next, an outline operation will be described.

[0092] First, the video server SV generates AV information stored in the video server SV according to the format of the transport stream, and distributes the AV information to the controller 8 in the information recording apparatus S via the network IT.

[0093] On the other hand, an analog terrestrial broadcast that is currently generalized is received by an analog AV receiving circuit via an antenna (not shown), and image information and audio information are separated from the received broadcast. The audio information is output to the audio encoder 11 to the encoder 10.

[0094] The video encoder 10 digitally encodes the image information and outputs it to the multiplexer 12.

[0095] In parallel with this, the audio encoder 11 digitally encodes the audio information and outputs it to the multiplexer 12.

[0096] As a result, the multiplexer 12 superimposes the digitized image information and audio information on each other, and outputs them to the controller 8.

[0097] In addition, for example, AV information distributed via a high-speed serial network is received by the digital interface 16 and output to the controller 8.

[0098] Further, for example, the BS digital broadcast described above is received by an antenna (not shown), demodulated by the modem 7 operating under the control of the controller 8, and output to the demultiplexer 3 through the digital broadcast receiving circuit 2. .

[0099] Then, under the control of the controller 8, the demultiplexer 3 obtains image information, audio information, and data information (the data information is, for example, from the AV information included in the input BS digital broadcast. Are output to the video decoder 4, the audio decoder 5 and the data decoder 6 and demodulated separately under the control of the controller 8, respectively. At this time, the data information generated as a result of the decoding in the data decoder 6 is superposed on the image information or the audio information as necessary, and then used for each demodulation process.

[0100] Thereafter, the decoded image information and audio information are output to the external television apparatus TV for viewing.

[0101] At this time, the controller 8 performs overall control of the series of processes described above, and instructions and the like necessary for the overall control are given by the user in the operation unit 14, and an operation signal corresponding to the instruction and the like is further transmitted from the operation unit 14.

When input to the controller 8, the controller 8 recognizes the instruction content and performs necessary processing. In addition, the OSD unit 20 serving as a generation circuit generates a display signal for the operation state during the overall control, and the generated display signal is added to the output of the video decoder 4 as necessary by the addition circuit 21. And displayed on the television device TV.

[0102] That is, the controller 8 determines whether the thumbnail image can be changed based on the permission information REL indicating whether to permit resetting of the initial program set representative image, and resets the initial program set representative image. “0” is described as the value when the permission is permitted, and “1” is described as the value when the resetting is not permitted. When “0” is described, the change of the thumbnail image is prohibited, and a display signal for displaying a warning that the change of the thumbnail image is impossible is generated by the OSD unit 20, and the generated display signal is displayed. Is added to the output of the video decoder 4 as necessary by the adder circuit 21 and displayed on the television device TV. On the other hand, when “0” is described, the thumbnail image is changed.

[0103] In addition to these, AV information to be stored in the hard disk 1 is demodulated by the video decoder 4 or the audio decoder 5 and outputted to the controller 8. Then, the controller 8 reconfigures the demodulated image information and the like so as to conform to the recording format described above and records it on the hard disk 1.

[0104] Further, when editing the AV information recorded on the hard disk 1, the AV information is once read from the hard disk 1, and necessary editing work is executed based on the operation in the operation unit 14.

[0105] On the other hand, the memory card 15 stores image information used as the above-described thumbnail image, and the controller 8 copies the thumbnail image to the hard disk 1 and uses it as the user-defined thumbnail image. A thumbnail image may be copied to the hard disk 1 via the digital interface 16 or a floppy (registered trademark) drive (not shown) and used as a user-defined thumbnail image.

[0106] Next, the operation of this embodiment will be described in more detail.

[0107] FIG. 10 is a flowchart of thumbnail setting by the user of recorded content. FIG. 10 is a flowchart in a case where it is permitted to reset the initial program set representative image by the permission information REL shown in FIG.

[0108] As shown in FIG. 10, when the thumbnail setting operation start button 14e is pressed in the operation unit 14 of FIG. 9 (step P1; Yes), the process proceeds to step P2, and the content recorded on the television device TV is displayed as shown in FIG.) Is displayed. If a content is selected from the displayed recorded content (step P3; Yes), the process proceeds to step P4, and a thumbnail specifier selection screen is displayed as shown in FIG.

[0109] Next, when the selection from the content pointer is selected in step P5, the process proceeds to step P6, and the content pointer designation operation screen is displayed as shown in FIG. If the designation operation is finished (step P7; Yes), the process is finished. If the designation operation is not finished (step P7; No), it is determined whether or not the content pointer is designated in step P8. If it is specified (step P8; Yes), the process proceeds to step P9, and a thumbnail image confirmation screen is displayed as shown in FIG. If not specified (step P8; No), the process returns to step P7.

[0110] Further, in step P10, it is determined whether to prohibit the change of the thumbnail image, the change is prohibited (step P10; Yes), and “Yes” is pressed in the thumbnail image confirmation screen shown in FIG. In the case (Step P11; Yes), the specification by the pointer of the thumbnail specifier is validated and the value of the pointer is stored (Step P12). If prohibition of changing the thumbnail image is not performed (step P10; No) and “Cancel” is pressed on the thumbnail image confirmation screen (step P11; No), the process returns to step P7.

[0111] On the other hand, if the content pointer is not selected in step P5, the process proceeds to step P13, and the external file designation operation screen is displayed as shown in FIG. Then, in step P14, it is determined whether or not the designation operation has been completed. If the file has not been designated and the file has been designated (step P15; Yes), the process proceeds to step P16, and the thumbnail image confirmation screen is displayed as shown in FIG. Display as shown in d). Here, when the designation operation is completed in step P14, the process is terminated at that time.

[0112] Next, when “Yes” is pressed on the thumbnail image confirmation screen shown in FIG. 11D (step P17; Yes), the specification by the pointer of the thumbnail specifier is invalidated, and the value of the file name or the like is set. Store (step P18). If no file is specified in step P15 or if “Cancel” is pressed on the thumbnail image confirmation screen (step P17; No), the process returns to step P13.

[0113] Next, a flowchart for determining whether thumbnail images can be reset in the present embodiment will be described with reference to FIG.

[0114] First, when the thumbnail setting operation start button is pressed in step S1, the recorded content is displayed on the display unit 13 shown in FIG. 8 as shown in FIG. 13A (step S2). Next, a content for setting a thumbnail is selected by the operation unit 14 from the content displayed on the screen of the television apparatus TV in step S3, and it is determined in step S4 whether the content is a content that can be reset to a thumbnail. If the content is resettable (step S4; Yes), thumbnail setting is started in step S5 according to the flowchart shown in FIG. Then, when the thumbnail setting is completed (step S6) according to the flowchart shown in FIG. 10, the process is terminated.

[0115] On the other hand, if the content cannot be reset in step S4 (step S4; No), the process proceeds to step S7, and an operation warning is displayed on the screen of the television device TV as shown in FIG. 13B. . If the thumbnail can be reset (step S8; Yes), the process proceeds to step S9 to determine whether or not the file having the flag can be rewritten, and the file can be rewritten. In the case (step S9; Yes), thumbnail setting is started in step S5 described above according to the flowchart shown in FIG. Then, when the thumbnail setting is completed (step S6) according to the flowchart shown in FIG. 10, the process is terminated.

[0116] When the thumbnail cannot be reset (step S8; No) and when the file having the flag cannot be rewritten (step S9; No), as shown in FIG. A warning indicating the end of the operation is displayed on the screen of the John device TV (step S10).

[0117] Next, FIG. 14 shows a flowchart for setting the thumbnail non-resettable bit in this embodiment.

[0118] As shown in FIG. 14, after executing the thumbnail setting operation in step S11, a confirmation screen as to whether or not thumbnail resetting is disabled is displayed on the television apparatus TV as shown in FIG. 15 (step S12). . Next, when resetting is impossible (step S13; Yes), the process proceeds to step S14, where the value of the permission information REL is set to 1, and the thumbnail management structure is recorded. On the other hand, when the resetting is not disabled (step S13; No), that is, when the resetting is permitted, the process proceeds to step S15, the value of the permission information REL is set to 0, and the thumbnail management structure is recorded.

[0119] As described above, according to the information recording / reproducing apparatus of the present embodiment, the change of the thumbnail image is prohibited when the controller 8 determines that the change cannot be made based on the change availability information indicating whether the thumbnail image can be changed. As a result, it is possible to prevent the thumbnail image indicating the content of the recorded information from being inadvertently changed. As a result, it is possible to protect the thumbnail image and recording information by the content holder and protect the thumbnail image by the user.

[0120] In addition, according to the present embodiment, when the controller 8 determines that the thumbnail image cannot be changed, a warning that the thumbnail image cannot be changed is displayed, so that it is clear to the user that the thumbnail image cannot be changed. Can be recognized.

[0121] Furthermore, according to the present embodiment, when it is determined that the controller 8 can change the thumbnail image, the thumbnail image is changed so that the user can select whether the thumbnail image is protected or not protected. Can be improved.

[0122] The present invention is not limited to the above-described embodiment, and various modifications can be made. For example, in the above-described embodiment, the image signal and the like are acquired by receiving radio waves such as normal analog terrestrial TV broadcasting and digital satellite broadcasting such as BS (broadcast satellite) digital. A video signal or the like may be acquired from a server VOD (Video On Demand) using as a communication path.

[0123] In the above embodiment, the case where the hard disk 1 is used as the recording medium has been described. However, various recording media such as a DVD and a flash memory capable of rewriting information can be used.

[0124] In addition, the program corresponding to the flowcharts shown in FIGS. 10, 12 and 14 is recorded on an information recording medium such as a flexible disk or a hard disk, and this is read and executed by a general-purpose microcomputer. It is possible to cause the microcomputer to function as the controller 8 according to the present embodiment.

[0125] As described above, according to the first aspect of the present invention, when it is determined that the change is impossible by the determination means based on the change enable / disable information indicating whether the thumbnail image can be changed, By prohibiting the change, it is possible to prevent the thumbnail image indicating the content of the recording information from being changed carelessly. As a result, it is possible to protect the thumbnail image and recording information by the content holder and protect the thumbnail image by the user.

[0126] According to the invention described in claim 2, in addition to the effect of the invention described in claim 1, when it is determined by the determination means that the change is impossible, a warning that the change of the thumbnail image is impossible is displayed. As a result, the user can clearly recognize that the thumbnail image cannot be changed.

[0127] According to the invention described in claim 3, in addition to the effect of the invention described in claim 1, when the determination unit determines that the change is possible, the thumbnail image is changed, so that the user can protect the thumbnail image or Non-protection can be selected, and the operability of setting thumbnail images by the user can be improved.

[0128] According to the fourth aspect of the present invention, the content of the recorded information is prohibited by prohibiting the change of the thumbnail image when it is determined that the change is impossible by the determination step based on the change enable / disable information indicating whether the thumbnail image can be changed. It is possible to prevent the thumbnail image indicating “” from being inadvertently changed. As a result, it is possible to protect the thumbnail image and recording information by the content holder and protect the thumbnail image by the user.

[0129] According to the invention described in claim 5, in addition to the effect of the invention described in claim 4, when it is determined that the change is impossible by the determination step, a warning that the thumbnail image cannot be changed is displayed. As a result, the user can clearly recognize that the thumbnail image cannot be changed.

[0130] According to the invention described in claim 6, in addition to the effect of the invention described in claim 4, when it is determined that the change is possible in the determination step, the thumbnail image is changed, thereby protecting the thumbnail image by the user or Non-protection can be selected, and the operability of setting thumbnail images by the user can be improved.

[0131] According to the seventh aspect of the invention, the computer functions so as to prohibit the change of the thumbnail image when it is determined that the change cannot be made by the determination means, so that the thumbnail image indicating the contents of the recorded information is inadvertently generated. It is possible to prevent the change from occurring. As a result, it is possible to protect the thumbnail image and recording information by the content holder and protect the thumbnail image by the user.

[0132] According to the invention described in claim 8, in addition to the effect of the invention described in claim 7, a warning that the thumbnail image cannot be changed is displayed when the determination unit determines that the change is impossible. In addition, when the computer functions, the user can clearly recognize that the thumbnail image cannot be changed.

[0133] According to the ninth aspect of the present invention, in addition to the effect of the seventh aspect of the invention, the computer functions so as to change the thumbnail image when it is determined that the change can be made by the determination means, so that the thumbnail by the user can be obtained. Image protection or non-protection can be selected, and the user can improve the setting operability of thumbnail images.

[0134] According to the tenth aspect of the present invention, when the information editing program according to the seventh aspect is recorded, the computer prohibits the change of the thumbnail image when the determination means determines that the change is impossible. By functioning, it is possible to prevent the thumbnail image indicating the contents of the recorded information from being inadvertently changed. As a result, it is possible to protect the thumbnail image and recording information by the content holder and protect the thumbnail image by the user.

[0135] When the information editing program according to claim 8 is recorded, the computer functions to display a warning that the thumbnail image cannot be changed when it is determined that the change cannot be made by the determination unit. As a result, the user can clearly recognize that the thumbnail image cannot be changed.

[0136] In a case where the information editing program according to claim 9 is recorded, the computer functions to change the thumbnail image when it is determined that the change is possible by the determination unit, so that the user can protect the thumbnail image or Non-protection can be selected, and the operability of setting thumbnail images by the user can be improved.

JP2003257161A INFORMATION EDITING DEVICE, INFORMATION EDITING METHOD, PROGRAM FOR EDITING INFORMATION, AND INFORMATION RECORDING MEDIUM

Data originating from sources other than the EPO may not be accurate, complete, or up to date.

The wording below is an initial machine translation of the original publication. To generate a version using the latest translation technology, go to the original language text and use Patent Translate.

In an information editing apparatus that edits the reproduction mode of recorded information recorded on a recording medium including at least image information, changeability indicating whether or not a thumbnail image indicating the content of the recorded information recorded on the recording medium can be changed An information editing apparatus comprising: a determination unit that determines whether or not the thumbnail image can be changed based on information, and prohibiting the change of the thumbnail image when the determination unit determines that the change is impossible.

The information editing apparatus according to claim 1, further comprising: a generation circuit that generates a display signal for displaying a warning that the thumbnail image cannot be changed when the determination unit determines that the change cannot be made. An information editing apparatus characterized by that.

The information editing apparatus according to claim 1, further comprising a changing unit that changes the thumbnail image when the change is determined by the determining unit.

In an information editing method for editing a reproduction mode of recorded information recorded on a recording medium including at least image information, changeability indicating whether or not a thumbnail image indicating the content of the recorded information recorded on the recording medium can be changed An information editing method comprising a determination step of determining whether or not the thumbnail image can be changed based on information, and prohibiting the change of the thumbnail image when the determination step determines that the change is impossible.

5. The information editing method according to claim 4, further comprising a generation step of generating a display signal for displaying a warning that the thumbnail image cannot be changed when the determination unit determines that the change is impossible. An information editing method characterized by that.

5. The information editing method according to claim 4, further comprising a changing step of changing the thumbnail image when it is determined by the determining means that the change is possible.

Whether a thumbnail image indicating the content of the recorded information recorded on the recording medium can be changed by a computer included in the information editing apparatus for editing the reproduction mode of the recorded information recorded on the recording medium including at least the image information Functioning as a judging means for judging whether or not the thumbnail image can be changed based on the changeability information indicating, and when the judging means judges that the computer that functions as the judging means cannot be changed, the thumbnail An information editing program which functions so as to prohibit image change.

8. The information editing program according to claim 7, wherein when the determination means determines that the computer cannot be changed, the computer generates a display signal for displaying a warning that the thumbnail image cannot be changed. An information editing program characterized in that it functions as a generation means.

8. The information editing program according to claim 7, wherein the computer is caused to function as a changing unit that changes the thumbnail image when the determining unit determines that the change is possible.

An information recording medium on which the information editing program according to any one of claims 7 to 9 is recorded.

【図1】

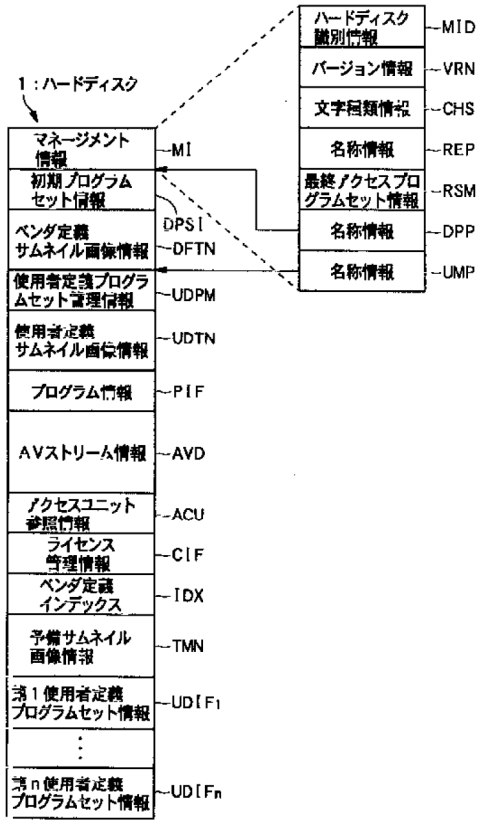
1：ハードディスク
マネージメント情報
初期プログラムセット情報
ベンダ定義サムネイル画像情報
使用者定義プログラムセット管理情報
使用者定義サムネイル画像情報
プログラム情報
AVストリーム情報
アクセスユニット参照情報
ライセンス管理情報
ベンダ定義インデックス
予備サムネイル画像情報
第1使用者定義プログラムセット情報
第n使用者定義プログラムセット情報
MI
DPSI
DFTN
UDPM
UDTN
PIF
AVD
ACU
CIF
IDX
TMN
UDIF1
UDIFn
ハードディスク識別情報
バージョン情報
文字種類情報
名称情報
最終アクセスプログラムセット情報
名称情報
名称情報
MID
VRN
CHS
REP
RSM
DPP
UMP

【図2】

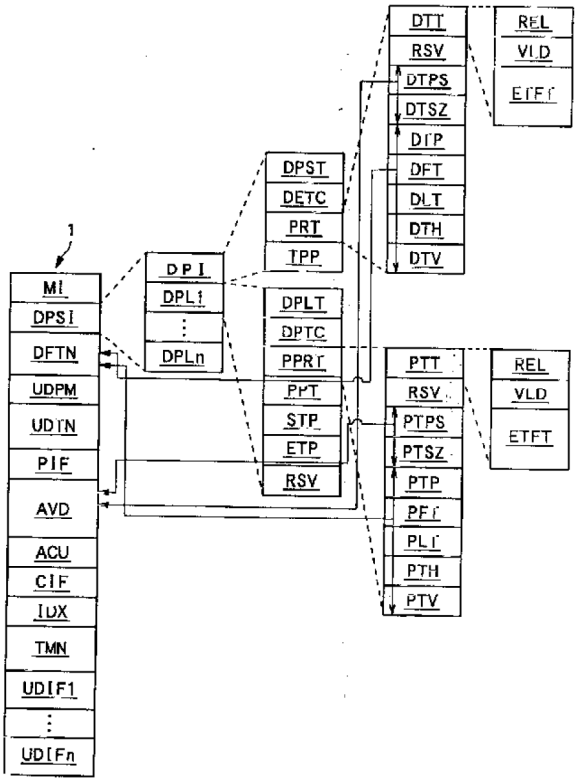
1
MI
DPSI
DFTN
UDPM
UDTN
PIF
AVD
ACU
CIF
IDX
TMN
UDIF1
UDIFn
DPI
DPL1
DPLn
DPST
DETC
PRT
TPP
DPLT
DPTC
PPRT
PPT
STP
ETP
RSV
DTT
RSV
DTPS
DTSZ
DTP
DFT
DLT
DTH
DTV
REL
VLD
ETFT
PTT
RSV
PTPS
PTSZ
PTP
PFT
PLT
PTH
PTV
REL
VLD
ETFT

【図3】

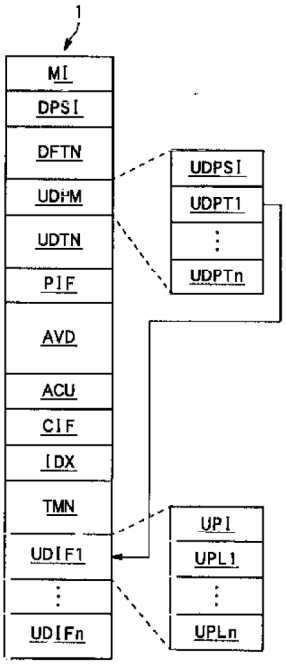
1
MI
DPSI
DFTN
UDPM
UDTN
PIF
AVD
ACU
CIF
IDX
TMN
UDIF1
UDIFn
UDPSI
UDPT1
UDPTn
UPI
UPL1
UPLn

【図4】

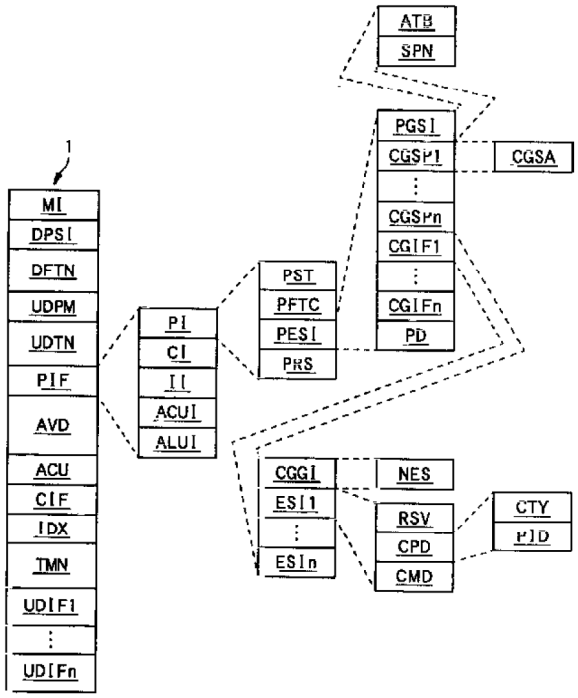
1
MI
DPSI
DFTN
UDPM
UDTN
PIF
AVD
ACU
CIF
IDX
TMN
UDIF1
UDIFn
PI
CI
II
ACUI
ALUI
PST
PFTC
PESI
PRS
ATB
SPN
PGSI
CGSP1
CGSA
CGSPn
CGIF1
CGIFn
PD
CGGI
ESI1
ESIn
NES
RSV
CPD
CMD
CTY
PID

【図9】

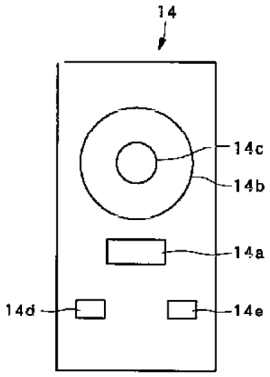
14
14c
14b
14a
14d
14e

【図5】

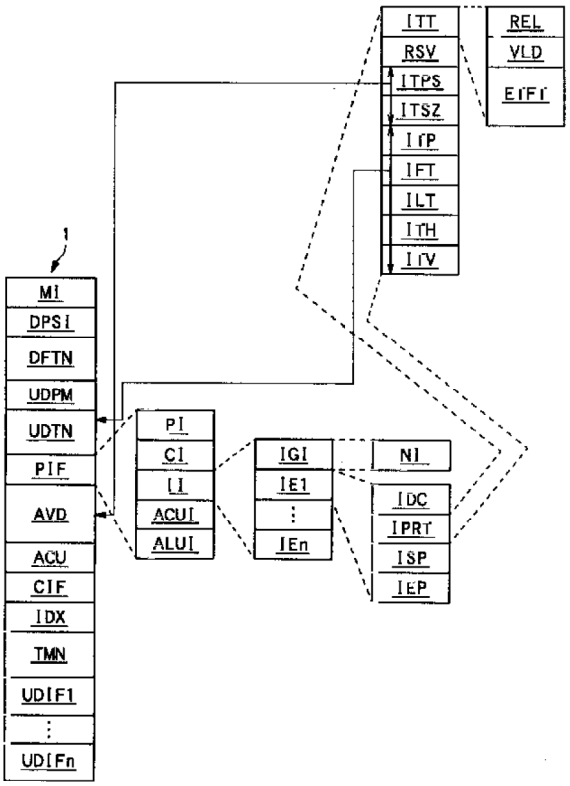
1
MI
DPSI
DFTN
UDPM
UDTN
PIF
AVD
ACU
CIF
IDX
TMN
UDIF1
UDIFn
PI
CI
II
ACUI
ALUI
IGI
IE1
IEn
NI
IDC
IPRT
ISP
IEP
ITT
RSV
ITPS
ITSZ
ITP
IFT
ILT
ITH
ITV
REL
VLD
EIFI

【図6】

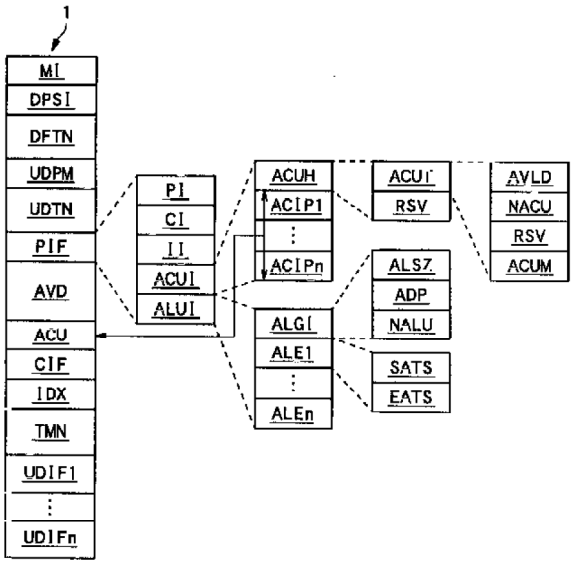
1
MI
DPSI
DFTN
UDPM
UDTN
PIF
AVD
ACU
CIF
IDX
TMN
UDIF1
UDIFn
PI
CI
II
ACUI
ALUI
ACUH
ACIP1
ACIPn
ACUT
RSV
AVLD
NACU
RSV
ACUM
ALSZ
ADP
NALU
ALGI
ALE1
ALEn
SATS
EATS

【図７】

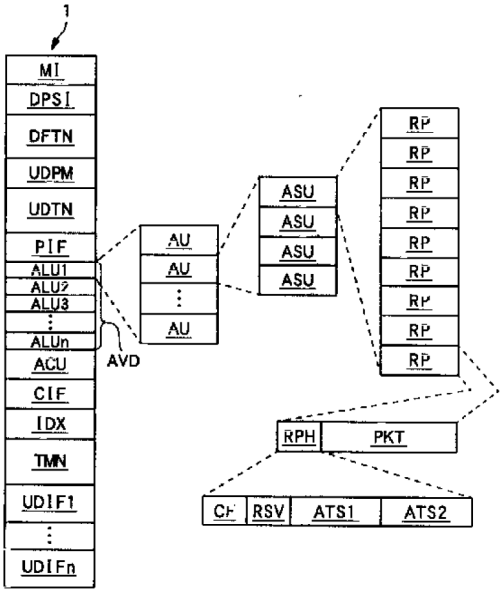
1
MI
DPSI
DFTN
UDPM
UDTN
PIF
ALU1
ALU2
ALU3
ALUn
ACU
CIF
IDX
TMN
UDIF1
UDIFn
AVD
AU
AU
AU
ASU
ASU
ASU
ASU
RP
RP
RP
RP
RP
RP
RP
RP
RP
RPH
PKT
CF
RSV
ATS1
ATS2

【図１１】

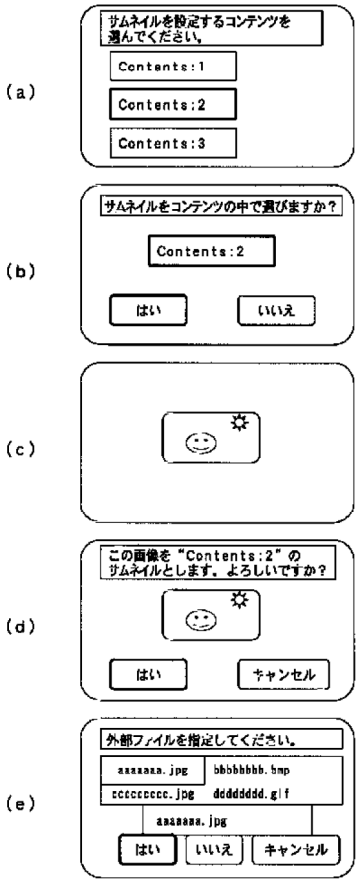
(a)
サムネイルを設定するコンテンツを選んでください。
Contents:1
Contents:2
Contents:3
(b)
サムネイルをコンテンツの中で選びますか？
Contents:2
はい
いいえ
(c)
(d)
この画像を"Contents:2"のサムネイルとします。よろしいですか？
はい
キャンセル
(e)
外部ファイルを指定してください。
aaaaaaa.jpg
bbbbbbbb.bmp
ccccccccc.jpg
ddddddddd.gif
aaaaaaa.jpg
はい
いいえ
キャンセル

【図8】

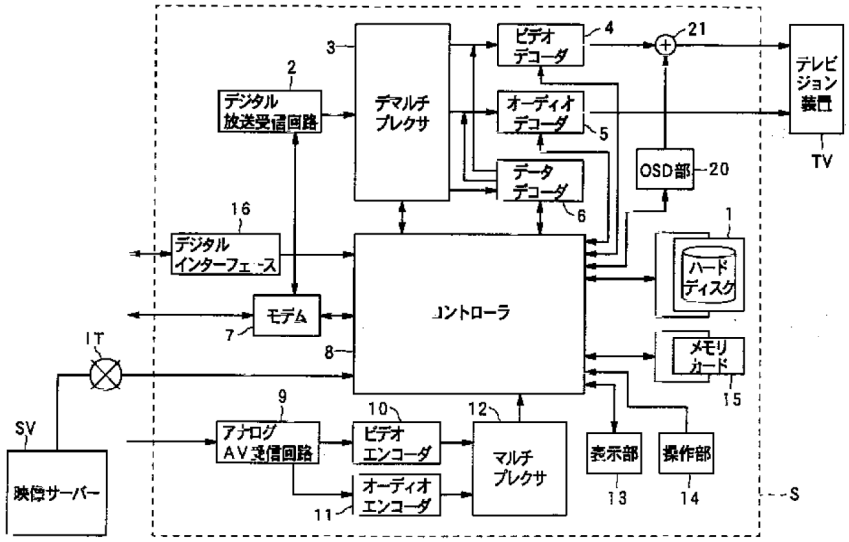
デジタル放送受信回路
デマルチプレクサ
ビデオデコーダ
オーディオデコーダ
データデコーダ
OSD部
テレビジョン装置
TV
デジタルインターフェース
モデム
コントローラ
ハードディスク
メモリカード
IT
SV
映像サーバー
アナログAV送信回路
ビデオエンコーダ
オーディオエンコーダ
マルチプレクサ
表示部
操作部
S

【図12】

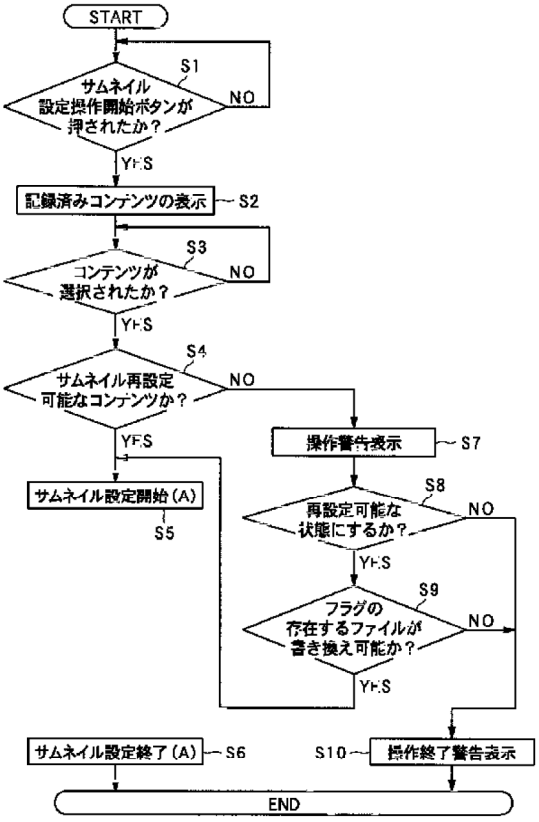
START
サムネイル設定操作開始ボタンが押されたか？
NO
YES
記録済みコンテンツの表示
コンテンツが選択されたか？
サムネイル再設定可能なコンテンツか？
サムネイル設定開始(A)
操作警告表示
再設定可能な状態にするか？
フラグの存在するファイルが書き換え可能か？
サムネイル設定終了(A)
操作終了警告表示
END

【図13】

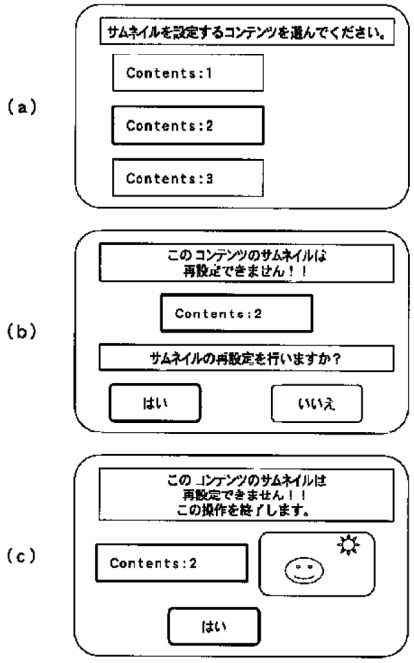
(a)
サムネイルを設定するコンテンツを選んでください。
Contents:1
Contents:2
Contents:3
(b)
このコンテンツのサムネイルは再設定できません！！
Contents:2
サムネイルの再設定を行いますか？
はい
いいえ
(c)
このコンテンツのサムネイルは再設定できません！！この操作を終了します。
Contents:2
はい

【図10】

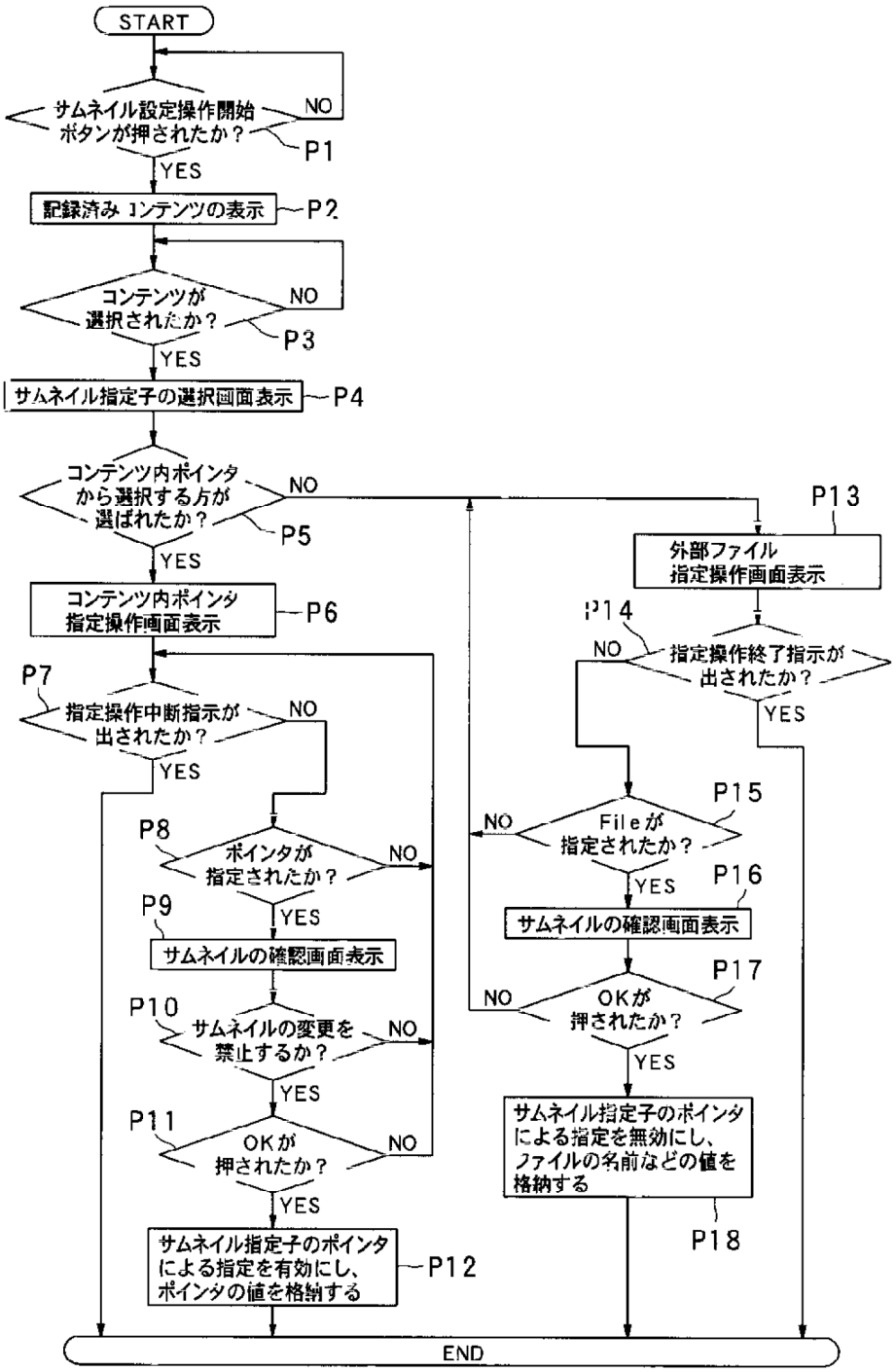
START
サムネイル設定操作開始ボタンが押されたか？
NO
P1
YES
記録済みコンテンツの表示
P2
コンテンツが選択されたか？
NO
P3
YES
サムネイル指定子の選択画面表示
P4
コンテンツ内ポインタから選択する方が選ばれたか？
NO
P5
YES
コンテンツ内ポインタ指定操作画面表示
P6
P7
指定操作中断指示が出されたか？
NO
YES
P8
ポインタが指定されたか？
NO
YES
P9
サムネイルの確認画面表示
P10
サムネイルの変更を禁止するか？
NO
YES
P11
OKが押されたか？
NO
YES
サムネイル指定子のポインタによる指定を有効にし、ポインタの値を格納する
P12
P13
外部ファイル指定操作画面表示
P14
指定操作終了指示が出されたか？
NO
YES
P15
Fileが指定されたか？
NO
YES
P16
サムネイルの確認画面表示
P17
OKが押されたか？
NO
YES
サムネイル指定子のポインタによる指定を無効にし、ファイルの名前などの値を格納する
P18
END

【図14】

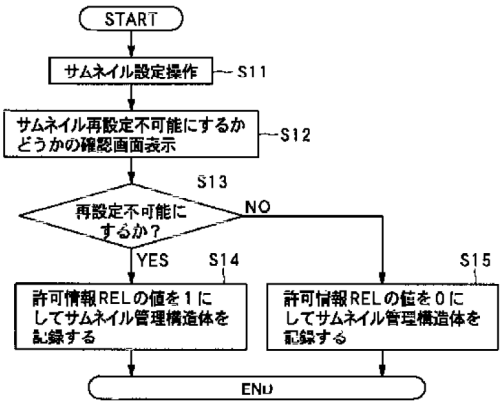

【図15】

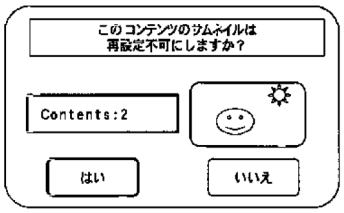

フロントページの続き

(71)出願人　000005016
パイオニア株式会社
東京都目黒区目黒１丁目４番１号
(71)出願人　000005108
株式会社日立製作所
東京都千代田区神田駿河台四丁目６番地
(72)発明者　金井　雄一
大阪府守口市京阪本通２丁目５番５号　三洋電機株式会　社内
(72)発明者　堀　吉宏
大阪府守口市京阪本通２丁目５番５号　三洋電機株式会　社内
(72)発明者　大野　良治
大阪府大阪市阿倍野区長池町22番22号　シャープ株　式会社内
(72)発明者　大石　剛士
神奈川県横浜市神奈川区守屋町３丁目12番地　日本ビ　クター株式会社内
(72)発明者　多田　謙一郎
埼玉県所沢市花園４丁目2610番地　パイオニア株式　会社所沢工場内
(72)発明者　戸崎　明宏
埼玉県所沢市花園４丁目2610番地　パイオニア株式　会社所沢工場内
(72)発明者　平井　達哉
神奈川県川崎市麻生区王禅寺1099番地　株式会社日立製作所システム開発研究所内

Ｆターム(参考)　5C052 AA01 AC08 CC11 DD04
5C053 FA06 FA23 GA11 GB37 HA29
5D077 AA22 BA15 HA07 HC17 HC25 HC50
5D110 AA13 AA27 AA29 BB20 CA07 CA43 DA20 FA09 FA10