UNITED STATES PATENT AND TRADEMARK OFFICE

BEFORE THE PATENT TRIAL AND APPEAL BOARD

AXON ENTERPRISE, INC. AND DEDRONE HOLDINGS, INC.,
Petitioners,

v.

AIRSPACE SYSTEMS, INC.,
Patent Owner.

Case IPR2025-00530
Patent No. 10,249,199

DECLARATION OF DR. GIRISH CHOWDHARY

TABLE OF CONTENTS

I. INTRODUCTION & QUALIFICATIONS 9
II. TASK SUMMARY AND MATERIALS REVIEWED 16
III. LIST OF EXHIBITS 16
IV. SUMMARY OF CONCLUSIONS AND GROUNDS FOR CHALLENGE. 18
V. LEGAL STANDARDS 19
A. Level of Ordinary Skill in the Art 19
B. Legal Standard for Claim Construction 20
C. Anticipation 21
D. Obviousness 22
VI. OVERVIEW OF THE CHALLENGED PATENT 25
A. The Subject Matter of the Challenged Patent 25
B. The Challenged Claims of the '199 Patent 28
C. Prosecution History of the '199 Patent 29
VII. LEVEL OF ORDINARY SKILL IN THE ART 31
VIII. CLAIM CONSTRUCTION 31
A. "Permission Module" 32
IX. TECHNOLOGY BACKGROUND AND STATE OF THE ART 34
A. Radio Transmissions and Antennae. 34
B. Air Traffic Management and its history with respect to UAS 37
1. Early Radio Communication (1920s–1940s): 37
2. Post-War Developments (1940s–1960s): 38
3. Advent of Automation and Data Links (1970s–1990s): 38
4. Modernization and ADS-B (2000s–Present): 39
C. Radio Frequency Communication and Security Challenges 39
D. Integration of UAS into Airspace Management have obviously required radio frequency communication and encryption 40

E. Identification and Tracking technologies 41
F. Interdiction of unidentified (presumed unfriendly) aircraft 42
X. OVERVIEW OF THE PRIOR ART 45
A. *Whitmarsh* (Ex. 1005) 45
1. Status of *Whitmarsh* 45
2. Overview of the Disclosure of *Whitmarsh* and *Whitmarsh Provisional* 46
B. *Viggiano* (Ex. 1007) 47
1. Status of *Viggiano* 47
2. Overview of the Disclosure of *Viggiano* 47
C. *Goodrich* (Ex. 1008) 47
1. Status of *Goodrich* 47
2. Overview of the Disclosure of *Goodrich* 48
D. *Falk* (Ex. 1011) 48
1. Status of *Falk* 48
2. Overview of the Disclosure of *Falk* and *Falk Provisional* 49
XI. GROUND 1: Whitmarsh Renders Obvious Claims 1-3 and 5-9 50
A. Claim 1 50
1. 1[p]: A discrimination system comprising: 50
2. 1[a]: an identifier transmission system coupled to an aerial system, wherein the identifier transmission system is configured to broadcast an aerial system identifier signal unique to the aerial system; 51
3. 1[b]: an identification receiver; 54
4. 1[c]: a permission module, ... 55
5. 1[d]: wherein the identification receiver is configured to receive the aerial system identifier signal and to provide the aerial system identifier signal to the permission module, ... 55

6. 1[e]: wherein the permission module is configured to determine that the aerial system associated with the aerial system identifier signal is not permitted to be in an airspace; and 57

7. 1[f]: a disruption system configured to disrupt an operation of the aerial system, wherein the disruption system is preemptively enabled based the received aerial system identifier signal 63

B. Claim 2 66

1. The system of claim 1, wherein the identifier transmission system and the identification receiver communicate using a radio chipset that is compatible with a communication protocol selected from the following: WiFi, LTE, or Bluetooth. 66

C. Claim 3 67

1. The system of claim 1, wherein the identification receiver is a mobile device. 67

D. Claim 5 68

1. The system of claim 1, wherein when the disruption system is enabled the aerial system is caused to be removed from the airspace. 68

E. Claim 6 69

1. The system of claim 1, wherein the disruption system comprises of a projectile launcher and an interdiction module. 69

F. Claim 7 70

1. The system of claim 1, wherein the disruption system comprises of an interceptor drone coupled with an interdiction module. 70

G. Claim 8 71

1. The system of claim 1, further comprising a control system for controlling the disruption system. 71

H. Claim 9 72

1. The system of claim 8, further comprising a logging system that is configured to record activity of at least one of the identification receiver, the permission module, or the control system. 72

XII. Ground 2: Whitmarsh and Falk Render Obvious Claim 4 74

A. Motivation to Combine 74

1. Whitmarsh and Falk 74

B. Claim 4 77

1. The system of claim 1, wherein the identifier transmission system is configured to be reassigned from a first aerial system to a second aerial system. 77

XIII. Ground 3: Whitmarsh and Goodrich Renders Obvious Claims 1-3 and 5-9 .. 80

A. Motivation to Combine 80

1. *Whitmarsh* and *Goodrich* 80

B. Claim 1 84

1. 1[p]: A discrimination system comprising: 84

2. 1[a]: an identifier transmission system coupled to an aerial system, wherein the identifier transmission system is configured to broadcast an aerial system identifier signal unique to the aerial system; 84

3. 1[b]: an identification receiver; 84

4. 1[c]: a permission module, ... 85

5. 1[d]: wherein the identification receiver is configured to receive the aerial system identifier signal and to provide the aerial system identifier signal to the permission module, ... 85

6. 1[e]: wherein the permission module is configured to determine that the aerial system associated with the aerial system identifier signal is not permitted to be in an airspace; and 85

7. 1[f]: a disruption system configured to disrupt an operation of the aerial system, wherein the disruption system is preemptively enabled based the received aerial system identifier signal. 85

C. Claim 2 88

D. Claim 3 88

E. Claim 5 89

1. The system of claim 1, wherein when the disruption system is enabled the aerial system is caused to be removed from the airspace. 89

F. Claim 6 90

1. The system of claim 1, wherein the disruption system comprises of a projectile launcher and an interdiction module. 90

G. Claim 7 91

1. The system of claim 1, wherein the disruption system comprises of an interceptor drone coupled with an interdiction module. 91

H. Claim 8 92

1. The system of claim 1, further comprising a control system for controlling the disruption system. 92

I. Claim 9 92

XIV. Ground 4: Whitmarsh, Goodrich, and Falk render Obvious Claim 4 92

A. Motivation to Combine 92

1. Whitmarsh and Goodrich 92

2. Whitmarsh with Falk 93

B. Claim 4 93

XV. GROUND 5: Viggiano and Goodrich Render Obvious Claims 1 and 5-9 93

A. Motivation to Combine 93

1. Viggiano and Goodrich 93

B. Claim 1 98

1. 1[p]: A discrimination system comprising: 98

2. 1[a]: an identifier transmission system coupled to an aerial system, wherein the identifier transmission system is configured to broadcast an aerial system identifier signal unique to the aerial system 99

3. 1[b]: an identification receiver; 102

4. 1[c]: a permission module, ... 103

5. 1[d]: wherein the identification receiver is configured to receive the aerial system identifier signal and to provide the aerial system identifier signal to the permission module,..... 103

6. 1[e]: wherein the identification receiver is configured to receive the aerial system identifier signal and to provide the aerial system identifier signal to the permission module,..... 104

7. 1[f]: a disruption system configured to disrupt an operation of the aerial system, wherein the disruption system is preemptively enabled based the received aerial system identifier signal; and..... 108

C. Claim 3..... 112

1. The system of claim 1, wherein the identification receiver is a mobile device..... 112

D. Claim 5..... 112

1. The system of claim 1, wherein when the disruption system is enabled the aerial system is caused to be removed from the airspace. 112

E. Claim 6..... 114

1. The system of claim 1, wherein the disruption system comprises of a projectile launcher and an interdiction module. 114

F. Claim 7..... 114

1. The system of claim 1, wherein the disruption system comprises of an interceptor drone coupled with an interdiction module..... 114

G. Claim 8..... 115

1. The system of claim 1, further comprising a control system for controlling the disruption system. 115

H. Claim 9..... 115

1. The system of claim 8, further comprising a logging system that is configured to record activity of at least one of the identification receiver, the permission module, or the control system. 115

XVI. Ground 6: Viggiano, Goodrich, and Falk Render Obvious Claim 4 117

A. Motivation to Combine..... 117

1. Viggiano and Goodrich 117

2. Viggiano and Goodrich with Falk 117

B. Claim 4 121

1. The system of claim 1, wherein the identifier transmission system is configured to be reassigned from a first aerial system to a second aerial system. 121

XVII. SECONDARY CONSIDERATIONS 124

XVIII. CONCLUSION 125

I, Girish Chowdhary, hereby declare as follows:

I. INTRODUCTION & QUALIFICATIONS

1. My name is Dr. Girish Chowdhary. I make this declaration based upon my own personal knowledge and, if called upon to testify, would testify competently to the matters contained herein.

2. I have been asked to provide technical assistance in the *inter partes* review of U.S. Patent No. 10,249,199, which I may abbreviate as "the '199 Patent" or refer to as the "Challenged Patent." This declaration is a statement of my opinions on issues related to the unpatentability of claims of the '199 Patent. I am being compensated at my normal hourly rate for my analysis, plus reimbursement for expenses. My compensation does not depend on the content of my opinions or the outcome of this proceeding.

3. In formulating my opinions, I have relied upon my knowledge, training, and experience in the relevant art. My qualifications are stated more fully in my curriculum vitae, which has been provided as Appendix A. My CV also lists publications on which I am a named author and identifies parties on behalf of whom I have previously provided expert testimony within the past four years. Here, I provide a brief summary of my qualifications.

4. I have over 19 years of experience with drone design and in unmanned aerial systems ("UAS") vehicle design and autonomous control. I also have

significant experience in the design and deployment of other field robotic systems. I have designed sensor systems, control systems, guidance systems, navigation systems, and software for a variety of such vehicles, as well as led UAS autonomy design projects and other field robotics design and autonomy projects. I have also led projects related to air traffic management for UAS, including projects whose scope directly overlaps with the matters discussed in this patent.

5. I am currently an Associate Professor at the University of Illinois at Urbana Champaign in the Department of Aerospace Engineering, as well as the Department of Agricultural and Biological Engineering and Department of Computer Science. In my capacity as a professor at the University of Illinois, I founded the Distributed Autonomous Systems Laboratory, for which I am currently the Director. I also founded the Field Robotics Engineering and Sciences (FRESH) hub, for which I am the director. I am also the director of the US Department of Agriculture funded Farm of the Future, in which UAS feature prominently.

6. Prior to my position at the University of Illinois, I was an Assistant Professor at Oklahoma State University, in the School of Mechanical and Aerospace Engineering. While at Oklahoma State University, I also founded and directed their Distributed Autonomous Systems Laboratory. I led several UAS related projects at Oklahoma State University, including those funded by NASA and Air Force

Research Laboratory (AFRL). I was relied upon as an expert to contribute to projects relating to UAS Air Traffic Management.

7. In 2013, I served as a visiting professor for the Massachusetts Institute of Technology; in particular, I was a visiting professor in the Laboratory for Information and Decision Systems and for the Department of Aeronautics and Astronautics. Between 2011 and 2013, I worked at the Massachusetts Institute of Technology as a Postdoctoral Research Associate for the Laboratory for Information and Decision Systems and for the Department of Aeronautics and Astronautics. At MIT I led and contributed to several projects relating to multi-aircraft coordination, including those funded by Boeing.

8. Between 2006 and 2011, I worked at the Georgia Institute of Technology, first as a graduate research assistant, and then as a research engineer. I was employed by the School of Aerospace Engineering. I contributed to several projects funded by NASA, Air Force, and many other institutions.

9. Between 2003 and 2006 I was a Research Engineer at the German Aerospace Center (DLR). In that role I contributed to one of the first UAS projects in Germany.

10. I also have substantial industry experience. In 2016, I co-founded "Unmanned Cowboys," a multi-product company that specializes in the commercialization of state-of-the-art UAS technologies. In 2016 I co-founded

EarthSense Inc., a company that provides autonomous drones and robots for applications in the field.

11. In 2013 through 2016, I have served as a consultant with Quarkonics Incorporated, a company that works with Fortune 500 oil and gas mining companies to create intelligent autonomous drilling techniques to improve oil well drilling.

12. From 2015 to 2016, I provided consulting services to Luminati Aerospace, a company focused on high altitude UAS.

13. Between 2008 and 2010, I was employed as a consulting controls engineer for Adaptive Flight Incorporated. In my capacity as a consulting controls engineer, I designed, developed, and tested the automation of the AFI Hornet UAS, the world's smallest commercially available UAS.

14. From 2008 to 2011, I was the team leader for the Control and Dynamics group of the Georgia Tech Aerial Robotics Team.

15. I am also the author of more than 200 publications on drone and UAS design, and am a named inventor on U.S. patents. I have been cited nearly 10,000 times for my published works in these areas.

16. I received a Bachelor of Engineering in Aerospace (with honors) from the Royal Melbourne Institute of Technology in 2003. I received my Masters in Aerospace Engineering in 2008 from the Georgia Institute of Technology, and my Ph.D. in 2010, also from the Georgia Institute of Technology. My dissertation was

on "Concurrent Learning for Convergence in Adaptive Control Without Persistency of Excitation."

17. I was the recipient of the Air Force Young Investigator Award in 2015, and the Ward Memorial Lecture award (2015) by the Aerospace Controls and Guidance Systems Committee for outstanding contributions to adaptive control for aerospace systems.

18. I have been or am the Principle Investigator on several federally funded projects relating to aerospace systems and unmanned aerial vehicles.

19. Below is a list of some of my relevant publications

20. Borkar Aseem V, **Chowdhary G.**, Multi-Agent Aerial Monitoring of Moving Convoys using Elliptical Orbits, International Conference on Robotics and Automation (**ICRA**), XiAn China and online, June 2021.

21. Joshi Girish, Virdi Jasvir, **Chowdhary G.**, Asynchronous Deep Model Reference Adaptive Control, Conference on Robot Learning (**CORL**), Massachusetts Institute of Technology (held online due to COVID-19), MA, Nov 2020.

22. Ure N. K., **Chowdhary G.**, How J. P., Vian J., Health-Aware Planning Under Uncertainty for Collaborative Heterogeneous Teams of Mobile Agents, Unmanned Systems, Vol 3, No. 2, pp 89-107, April 2015.

23. Allamaraju R., Kingravi H., Axelrod A., **Chowdhary G.**, Grande R., How J. P., Crick C., Sheng W., Human Aware Path Planning in Urban Environments with Nonstationary MDPs, IEEE International Conference on Robotics and Automation (**ICRA**), Hong-Kong China, May 2014.

24. Kannan S., **Chowdhary G.**, Johnson E., Adaptive Control of Unmanned Aerial Vehicles – Theory and Flight Test Results, Springer handbook of UAVs, January 2014.

25. Ure N. K., **Chowdhary G.**, Toksoz T., How J. P., Vavrina M., Vian J., An Automated Battery Management System to Enable Persistent Missions with Multiple Aerial Vehicles, IEEE Transactions on Mechatronics, Vol. 20, No. 1, pp. 275-286, Jan 2014.

26. Chowdhary G., Frazzoli E., **How J.**, Lui H., Nonlinear Flight Control Techniques for Unmanned Aerial Vehicles, to appear in the Springer handbook of UAVs, January 2014.

27. How J., Frazzoli E., **Chowdhary G.**, Linear Flight Control Techniques for Unmanned Aerial Vehicles, to appear in the Springer handbook of UAVs, January 2014.

28. **Chowdhary G.**, Johnson E., Theory and Flight Test Validation of a Concurrent Learning Adaptive Controller, AIAA Journal of Guidance Control and Dynamics (JGCD), Vol. 34, No. 2, pp. 592-607, March-April 2011.

29. **Chowdhary G.**, Johnson E., Chandramohan R., Kimbrell M. S., Calise A., Guidance and Control of Airplanes Under Actuator Failures and Severe Structural Damage, AIAA Journal of Guidance Control and Dynamics (JGCD), vol 36, No. 4, pp. 1093-1104, 2013.

30. **Chowdhary G.**, Sobers M., Salün E., Ottander J., Fully Autonomous Indoor Flight Relying on Five Very Low-Cost Range Sensors, AIAA Journal of Aerospace Information Systems (JAIS), Vol 10, No. 1, pp 21-31, January 2013.

31. **Chowdhary G.**, Johnson E., Magree D., Wu D., Shein A., GPS-Denied Indoor and Outdoor Monocular Vision Aided Navigation and Control of Unmanned Aircraft, Journal of Field Robotics (JFR), Vol 30, No. 3, pp 415-438, March 2013.

32. **Chowdhary G.**, Johnson E., Adaptive Neural Network Flight Control using both Current and Stored data, Proc. of AIAA Guidance Navigation and Control Conference (GNC), NC, USA 2007.

33. **Chowdhary G.**, Sobers M., Christmann C. H., Kimbrell S. M., Johnson E., Georgia Tech Aerial Robotics Team: 2009 International Aerial Robotics Competition Entry, First Symposium on Indoor Flight Issues, University of Puerto Rico Mayagüez, PR, USA 2009, winner of best paper award.

34. Therefore, based on my education, professional experience of over 19 years, and scholarly publications, I am an expert in the relevant field of the ’199 Patent and have been an expert in this field since before the ‘199 Patent was filed

with the United States Patent and Trademark Office ("USPTO"). I am familiar with how a person having ordinary skill in the art would have understood and used the terminology found in the '199 Patent at the time of filing.

II. TASK SUMMARY AND MATERIALS REVIEWED

35. I have been asked to review the Challenged Patent and its prosecution history, to provide an understanding of the technology relevant to the Challenged Patent, to review certain prior-art references, and analyze whether or not those references disclose or teach limitations of claims from the Challenged Patent. The opinions stated in this declaration are from the perspective of a person of ordinary skill in the art (POSITA).

III. LIST OF EXHIBITS

36. In forming my opinions, I have reviewed the Challenged Patent, its prosecution history and references cited by the Examiner, the materials cited in the List of Exhibits, and the materials cited throughout my declaration.

Ex.	Description
1001	U.S. Patent No. 10,249,199 to Banga, "System and Method for Aerial System Discrimination and Action" (the "'199 Patent")
1002	File History for U.S. Patent No. 10,249,199
1003	Declaration of Dr. Girish Chowdhary
1004	Complaint for Patent Infringement, *Airspace Systems, Inc. v. Dedrone Holdings, Inc.*, Case No. 1-24-cv-01625 (E.D. VA), September 16, 2024

1005	U.S. Patent Application Publication No. 2019/0003807 to Whitmarsh *et al*., "UAV Defense System," ("*Whitmarsh*") filed December 8, 2016 and published January 3, 2019
1006	U.S. Provisional Application No. 62/267,393 to Whitmarsh *et al.*, "UAV Defense System," ("*Whitmarsh Provisional*"), filed December 15, 2015
1007	U.S. Patent Application Publication No. 2007/0239986 to Viggiano *et al.*, "Secure ADS-B Authentication System and Method," ("*Viggiano*") filed April 7, 2006 and published October 11, 2007
1008	U.S. Patent Application Publication No. 2016/0023760 to Goodrich, "Systems and Methods Countering an Unmanned Aerial Vehicle," ("*Goodrich*") filed July 16, 2015 and published January 28, 2016
1009	U.S. Patent No. 10,733,894 to Beard et al., "Direct-broadcast Remote Identification (RID) Device for Unmanned Aircraft Systems (UAS)," filed February 26, 2018 and issued August 4, 2020
1010	U.S. Provisional Application No. 62/209,221 to Beard, "Automatic Dependent Surveillance Broadcast Transmission within Whitespace," filed August 24, 2015
1011	U.S. Patent No. 9,805,238 to *Falk et al*., "System for Identifying and Controlling Unmanned Aerial Vehicles," ("*Falk*") filed July 11, 2016 and issued October 31, 2017
1012	U.S. Provisional Application No. 62/301,858 to Falk, "System for Identifying and Controlling Unmanned Aerial Vehicles ("*Falk Provisional*"), filed March 1, 2016
1013	Claim Listing of Challenged Claims
1014	Kayton, Myron and Fried, Walter, *Avionics Navigation Systems*, John Wiley and Sons, 1997.
1015	International Publication No. WO2016/154949 A1 to Gong et al., "Authentication Systems and Methods for Generating Flight Regulations," filed March 31, 2015 and published October 6, 2016

1016	International Publication No. WO2015/043123 A1 to Wang *et al*., "Data Communication Systems and Methods," filed January 14, 2014 and published April 2, 2015
1017	Burnside, Joseph E., "ADS-B Out: 978 UAT or 1090ES?," Aviation Safety, published March 15, 2016
1018	Nichols, Randall et al., *Counter Unmanned Aircraft Systems Technology and Operations*, New Prairie Press, 2020
1019	Austin, Reg, *Unmanned Aircraft Systems, UAVS Design, Development and Deployment*, Wiley, John Wiley and Sons, 2010

IV. SUMMARY OF CONCLUSIONS AND GROUNDS FOR CHALLENGE

37. After reviewing the materials identified in the List of Exhibits, I have concluded that each of the Challenged Claims of the '199 Patent would have been obvious to a person of ordinary skill in the art, based on the following grounds.

Ground	'199 Claims	Basis for Challenge
1	1-3, 5-9	Obvious over *Whitmarsh*
2	4	Obvious over *Whitmarsh* in view of *Falk*
3	1-3, 5-9	Obvious over *Whitmarsh* in view of *Goodrich*
4	4	Obvious over *Whitmarsh* in view of *Goodrich* and *Falk*
5	1, 3, 5-9	Obvious over *Viggiano* in view of *Goodrich*

6	4	Obvious over *Viggiano* in view of *Goodrich* and *Falk*

V. LEGAL STANDARDS

A. LEVEL OF ORDINARY SKILL IN THE ART

38. When interpreting a patent, I understand that it is important to identify the relevant art pertaining to the patent-in-suit as well as the level of ordinary skill in that art at the time of the claimed invention. The "art" is the field of technology to which the patent is related.

39. I have been instructed by counsel that the person of ordinary skill in the art (**"POSITA"**) is a hypothetical person who is presumed to know the relevant prior art. I understand that the actual inventor's skill is not determinative of the level of ordinary skill. I further understand that the factors that may be considered in determining the level of skill include: the types of problems encountered in the art; prior art solutions to those problems; rapidity with which innovations are made; sophistication of the technology; and educational level of active workers in the field. I understand that not all such factors may be present in every case, and one or more of them may predominate.

B. LEGAL STANDARD FOR CLAIM CONSTRUCTION

40. I understand that the first step in determining whether a patent claim would have been anticipated or obvious is to ascertain how a POSITA would have understood the claim terms.

41. I have been instructed by counsel on the law regarding claim construction and patent claims, and I understand that a patent may include two types of claims: independent claims and dependent claims. An independent claim stands alone and includes only the limitations it recites. A dependent claim can depend from an independent claim, or it can further depend from another dependent claim. I understand that a dependent claim includes all the limitations that it recites, in addition to all the limitations recited in the claim(s) from which it depends.

42. It is my understanding that in proceedings before the USPTO, the claims of a patent are to be construed under what is referred to as the "Phillips standard." I understand that this means that claim terms of a patent are given the meaning the terms would have to a POSITA, in view of the description provided in the patent itself and the patent's file history.

43. I understand that to determine how a person of ordinary skill would understand a claim term, one should look to those sources available that show what a person of skill in the art would have understood the disputed claim language to mean. I understand that, in construing a claim term, one looks primarily to the

intrinsic patent evidence, including the words of the claims themselves, the remainder of the patent, and the patent's prosecution history. I understand that extrinsic evidence, which is evidence external to the patent and the prosecution history, may also be useful in interpreting patent claims when the intrinsic evidence itself is insufficient.

44. I understand that words or terms should be given their ordinary and accepted meaning unless it appears that the inventors were using them to mean something else. In making this determination, the claims, the remainder of the patent, and the prosecution history are of paramount importance. Additionally, the patent and its prosecution history must be consulted to confirm whether the patentee has acted as its own lexicographer (i.e., provided its own special meaning to any disputed terms), or intentionally disclaimed, disavowed, or surrendered any claim scope.

45. In comparing the claims of the Challenged Patent to the prior art, I have considered the Challenged Patent and its file history in light of the understanding of a person of skill at the time of the alleged invention.

C. ANTICIPATION

46. It is my understanding that the claims of a patent are anticipated by a prior art reference if each and every element of the claim is found either explicitly or inherently in a single prior art reference or system. I understand that inherency

requires a showing that the missing descriptive matter in the claim is necessarily or implicitly present in the allegedly anticipating reference, and that it would have been so recognized by a POSITA. In addition, I understand that an enabling disclosure is a disclosure that allows a POSITA to make the invention without undue experimentation. Although anticipation typically involves the analysis of a single prior art reference, I understand that additional references may be used to show that the primary reference has enabling disclosure, to explain the meaning of a term used in the primary reference, and/or to show that a characteristic is inherent in the primary reference.

D. OBVIOUSNESS

47. I understand that the prior art may render a patent claim "obvious." I understand that two or more prior art references (e.g., prior art articles, patents, or publications) that each disclose fewer than all elements of a patent claim may nevertheless be combined to render a patent claim obvious if the combination of the prior art collectively discloses all elements of the claim and one of ordinary skill in the art at the time would have been motivated to combine the prior art in such a way. I understand that this motivation to combine need not be explicit in any of the prior art, but may be inferred from the knowledge of one of ordinary skill in the art at the time the patent was filed. I also understand that one of ordinary skill in the art is not an automaton, but is a person having ordinary creativity. I further understand that

one or more prior art references, articles, patents or publications that disclose fewer than all of the elements of a patent claim may render a patent claim obvious if including the missing element would have been obvious to one of skill in the art (e.g., the missing element represents only an insubstantial difference over the prior art or a reconfiguration of a known system).

48. I understand that under the doctrine of obviousness, a claim may be invalid if the differences between the invention and the prior art are such that the subject matter as a whole would have been obvious at the time the invention was made to a POSITA to which the subject matter pertains.

49. To assess obviousness, I understand that I am to consider the scope and content of the prior art, the differences between the prior art and the claim, the level of ordinary skill in the art, and any secondary considerations to the extent they exist.

50. I understand that any evidence of secondary indicia of non-obviousness should be considered when evaluating whether a claimed invention would have been obvious to one of ordinary skill at the time of invention. These secondary indicia of non-obviousness may include, for example:

- a long felt but unmet need in the prior art that was satisfied by the claimed invention;
- commercial success of processes claimed by the patent;
- unexpected results achieved by the invention;
- praise of the invention by others skilled in the art;

- the taking of licenses under the patent by others; and
- deliberate copying of the invention.

51. I understand that there must be a nexus between any such secondary indicia and the claimed invention.

52. It is also my understanding that there are additional considerations that may be used as further guidance as to when the above factors will result in a finding that a claim is obvious, including the following:

- the claimed subject matter is simply a combination of prior art elements according to known methods to yield predictable results;
- the claimed subject matter is a simple substitution of one known element for another to obtain predictable results;
- the claimed subject matter uses known techniques to improve similar devices or methods in the same way;
- the claimed subject matter applies a known technique to a known device or method that is ready for improvement to yield predictable results;
- the claimed subject matter would have been "obvious to try" choosing from a finite number of identified, predictable solutions, with a reasonable expectation of success;
- there is known work in one field of endeavor that may prompt variations of it for use in either the same field or a different one based on design incentives or other market forces if the variations would have been predictable to a POSITA;
- there existed at the time of the invention a known problem for which there was an obvious solution encompassed by the patent's claims; and

- there is some teaching, suggestion, or motivation in the prior art that would have led a POSITA to modify the prior art reference or to combine prior art reference teachings to arrive at the claimed subject matter.

53. Finally, I understand that a claim may be deemed invalid for obviousness in light of a single prior art reference, without the need to combine references, if the elements of the claim that are not found in the reference can be supplied by the knowledge or common sense of one of ordinary skill in the relevant art.

VI. OVERVIEW OF THE CHALLENGED PATENT

54. I have reviewed U.S. Patent No. 10,249,199 ("the '199 Patent"), which is entitled "Low Altitude Aircraft Identification System." I understand that the patent was filed on December 10, 2018, and that it was issued on July 14, 2020. The '199 Patent claims priority to Provisional application No. 62/175,153 filed on June 12, 2015 and to Provisional application No. 62/566,450 filed on October 1, 2017. Ex. 1001, item (60).

A. THE SUBJECT MATTER OF THE CHALLENGED PATENT

55. The '199 Patent generally relates to an "aerial system discrimination system" that "functions to determine whether an aerial system is authorized or unauthorized to be in the airspace." Ex. 1001, Abstract. The discrimination system comprises several components, including an "aerial system disruption system 105, an aerial system identification system 111, and a permissions module 103." *Id.*,

1:60-63. Figure 1 of the '199 Patent, copied below, depicts discrimination system 110:

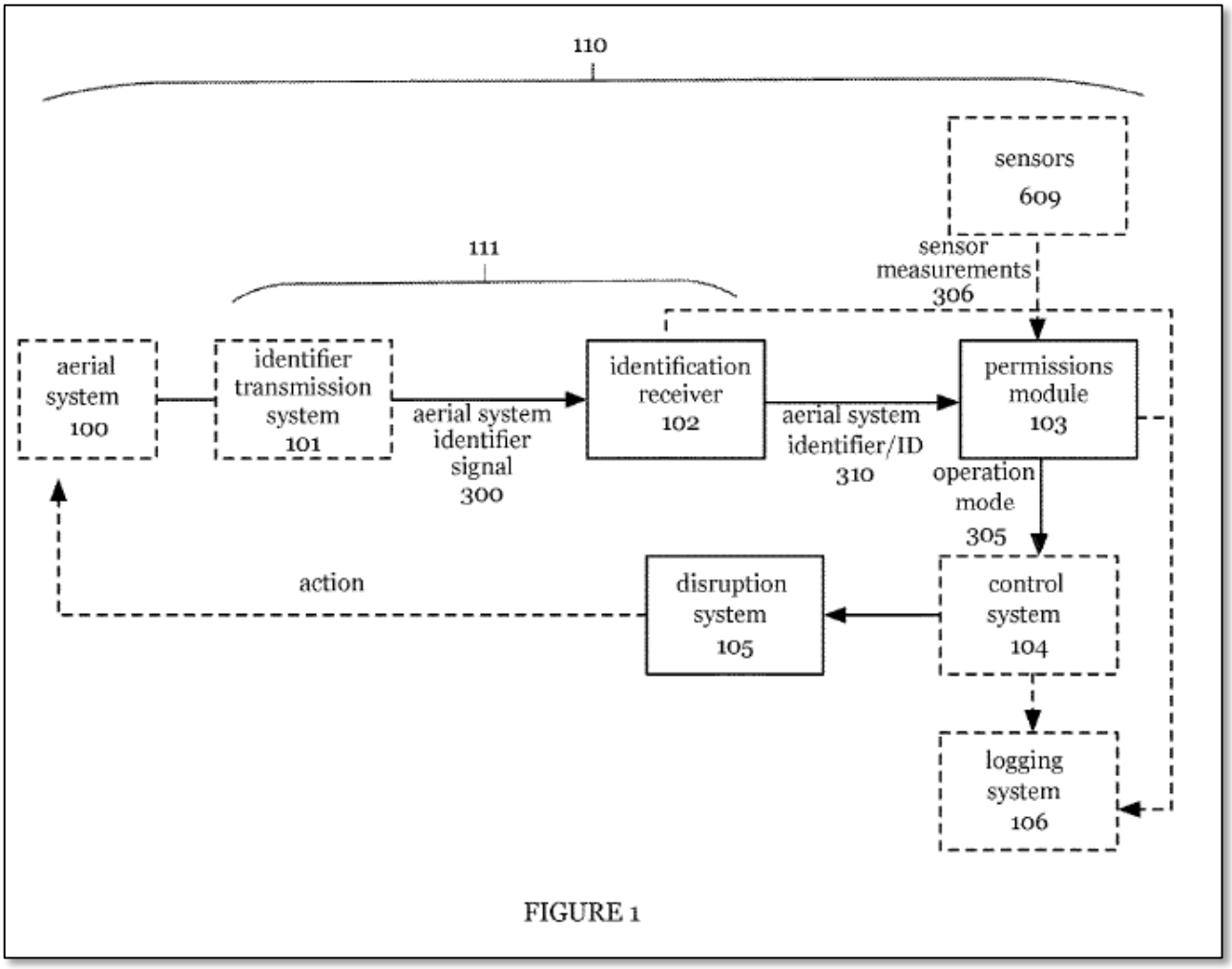

Ex. 1001, Fig. 1.

56. In operation, the '199 Patent explains that the identification system "receives an aerial system identifier 300 broadcast from a aerial system 100. The aerial system identifier 300 is checked against the permissions module 103, which determines whether the aerial system identifier 300 is associated with an authorized or unauthorized UAV." *Id.*, 2:10-15. When the detected UAV is authorized, the

disruption system can be "automatically activated (e.g., unlocked)," which means that a "launcher 303 can launch the interdiction module 304 toward the UAV, wherein the interdiction module 304 can immobilize the motive mechanism of the aerial system 100 (e.g., by disabling the power system, entangling the motive mechanism, etc.)." *Id*., 2:15-26. Figure 3 of the '199 Patent, copied below, depicts such implementation of the interdiction module:

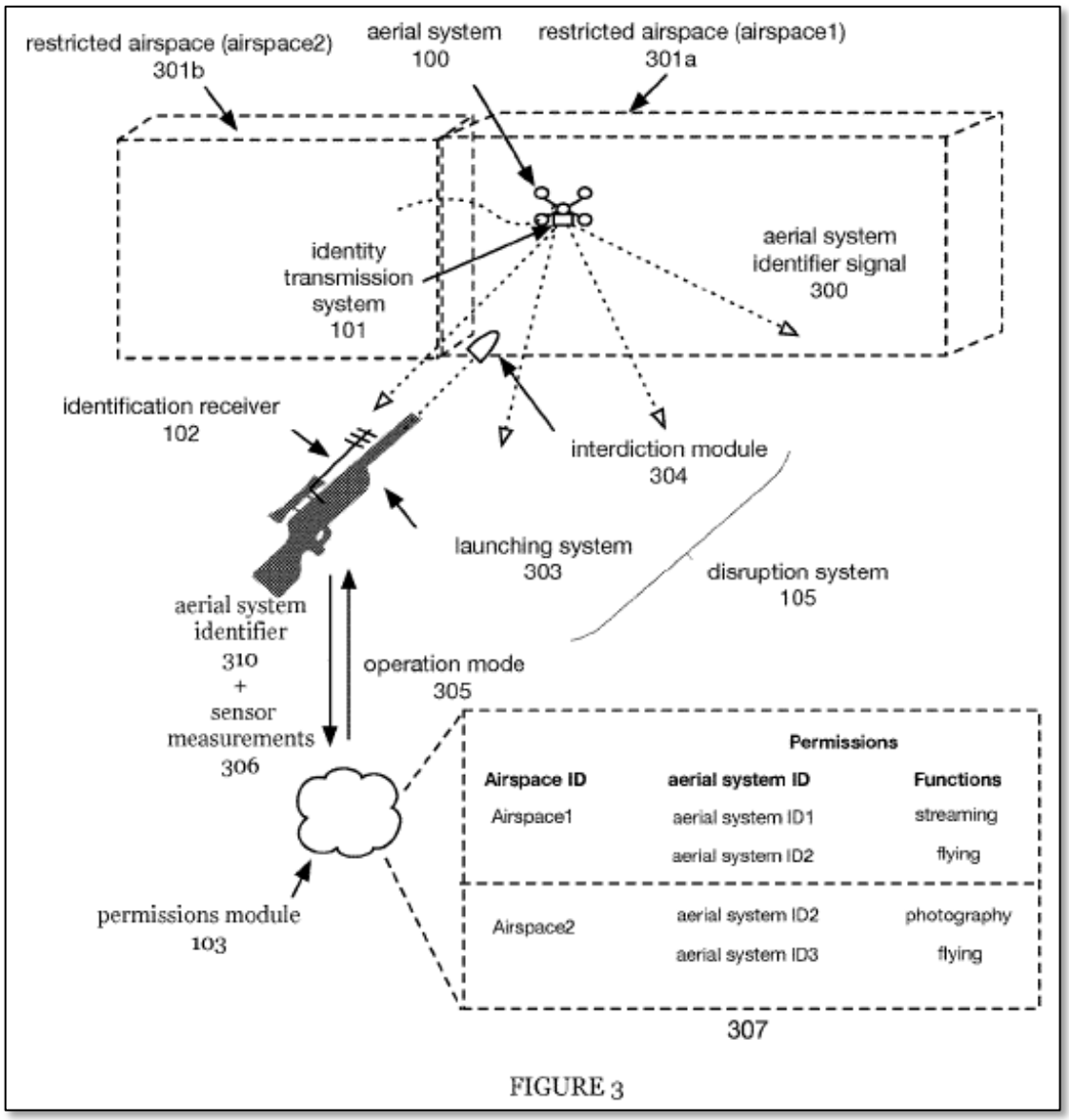

FIGURE 3

Id., Fig. 3.

B. THE CHALLENGED CLAIMS OF THE '199 PATENT

57. The Challenged Claims of the '199 Patent are set forth below.

#	Limitation
1[p]	A discrimination system comprising:
1[a]	an identifier transmission system coupled to an aerial system, wherein the identifier transmission system is configured to broadcast an aerial system identifier signal unique to the aerial system;
1[b]	an identification receiver;
1[c]	a permission module,
1[d]	wherein the identification receiver is configured to receive the aerial system identifier signal and to provide the aerial system identifier signal to the permission module,
1[e]	wherein the permission module is configured to determine that the aerial system associated with the aerial system identifier signal is not permitted to be in an airspace; and
1[f]	a disruption system configured to disrupt an operation of the aerial system, wherein the disruption system is preemptively enabled based the received aerial system identifier signal.
2	The system of claim 1, wherein the identifier transmission system and the identification receiver communicate using a radio chipset that is compatible with a communication protocol selected from the following: WiFi, LTE, or Bluetooth.
3	The system of claim 1, wherein the identification receiver is a mobile device.
4	The system of claim 1, wherein the identifier transmission system is configured to be reassigned from a first aerial system to a second aerial system.

5	The system of claim 1, wherein when the disruption system is enabled the aerial system is caused to be removed from the airspace.
6	The system of claim 1, wherein the disruption system comprises of a projectile launcher and an interdiction module.
7	The system of claim 1, wherein the disruption system comprises of an interceptor drone coupled with an interdiction module.
8	The system of claim 1, further comprising a control system for controlling the disruption system.
9	The system of claim 8, further comprising a logging system that is configured to record activity of at least one of the identification receiver, the permission module, or the control system.

C. PROSECUTION HISTORY OF THE '199 PATENT

58. The application leading to the '199 Patent was filed on May 17, 2017, as U.S. Application 15/598,303 (the "'303 Application"). Ex. 1001, items (21), (22). The '199 Patent claims priority to provisional application No. 62/309,838 (the "'838 Provisional"), which was filed on March 17, 2016. *Id.*, item (60). Because the '303 Application was filed more than 12 months after the '838 Provisional's filing date, applicant filed a petition to restore priority to the '838 Provisional on March 23, 2018. Ex. 1002, 157-158. This petition was granted on April 5, 2018. *Id.*, 146-149. For the purposes of this petition, I assume without conceding that the priority date of the '199 Patent is March 17, 2016.

59. The Patent Office issued a first Non-Final Office Action on September 17, 2019, rejecting Claims 1-5, 10, and 11 as anticipated by U.S. Patent No.

9,792,613 ("*Gong*"), Claims 6-7 as obvious over *Gong* in view of U.S. Patent No. 9,835,709 ("*Tran*"), Claim 8 as obvious over *Gong* in view of *Tran* and U.S. Patent No. 9,689,976 ("*Parker*"), Claim 9 as obvious over Gong in view of Tran and U.S. Patent Publication No. 2017/0059692 ("*Laufer*"). Ex. 1002, 120-126. Further, Claims 1-11 were rejected as being indefinite based on Claim 1's recitation of the limitation "the identification receiver system," and Claims 1-11 were objected to for various informalities. Ex. 1002, 119-120.

60. In response, applicant made various amendments, including adding the limitation "a disruption system configured to disrupt an operation of the aerial system, wherein the disruption system is preemptively enabled based the received aerial system identifier signal," to independent Claim 1. Ex. 1002, 106-109. Applicant acknowledged that *Gong* "separately discloses UAV identifiers and a countermeasure system," but argued that "Gong does not appear to disclose that the countermeasure system is preemptively enabled based on the UAV identifiers." *Id*., 111-112. Applicant further amended Claim 1 to address the written description rejection and informalities objections. *Id*., 111.

61. On January 2, 2019, the Patent Office issued a notice of allowance. *Id*., 88-92.

VII. LEVEL OF ORDINARY SKILL IN THE ART

62. A person of ordinary skill in the art would have either (1) a Bachelor of Science in Mechanical Engineering, Electrical Engineering, Aerospace Engineering, Aviation Technologies, Avionics, or an equivalent field as well as at least 2 years of academic or industry experience in the same fields, or (2) at least four years of industry experience in any of the above.

VIII. CLAIM CONSTRUCTION

63. I have been informed by counsel for Petitioner that the challenged claims of the ’199 Patent are to be given their ordinary and customary meaning as understood by one of ordinary skill in the art at the time of the invention in light of the specification and the prosecution history pertaining to the patent. I also understand, however, that a claim term will not receive its ordinary meaning if the patentee acted as his own lexicographer and clearly set forth a definition of the claim term in the specification. In this case, the claim term will receive the definition set forth in the patent. I have followed these principles in my analysis set forth in this Declaration.

64. To the extent the Applicant has expressly defined a claim term in the specification, I have used that definition. With respect to claim terms for which the applicant has not provided an express definition, I have applied the ordinary and

customary meaning of the claim terms in light of the specification and the prosecution history in my analysis of the claims and the prior art herein.

65. I identify the terms from challenged Claims 1-9 for construction.

A. "PERMISSION MODULE"

66. The challenged claims all recite a "*permission module*." I understand that Federal Circuit has in some circumstances interpreted the term "module" in computer-related uses to be a nonce term subject to 35 U.S.C. §112(f). *See, e.g.*, *Williamson v. Citrix Online*, LLC, 792 F.3d 1339, 1350 (Fed. Cir. 2015) ("'Module' is a well-known nonce word that can operate as a substitute for 'means' in the context of § 112, para. 6."). To the extent that this term[1] needs to be construed under §112(f), and without conceding that the claim limitations satisfy 35 U.S.C. §112, Petitioners identify below this term's corresponding function and structure.[2]

67. Claim 1 recites "*a permission module*" and "*wherein the permission module is configured to determine that the aerial system associated with the aerial system identifier signal is not permitted to be in an airspace*." If §112(f) applies, the term's function is "determining that the aerial system associated with the aerial

[1] I note that Claims 6 and 7 include the term "*interdiction module*." I do not believe that this term is subject to §112(f), as this is not a computer-related term. A POSITA would instead understand, based on its use in the claim and specification, it to refer to specific structures. *See, e.g.*, Ex. 1001, 11:40-12:52 (identifying a "net" and a "set of masses (e.g., bullets)" as examples of the "interdiction module").
[2] All structure identified below includes equivalents thereof,

system identifier signal is not permitted to be in an airspace." Ex. 1001, 20:53-56. The '199 Patent discloses that the permission module can be: "storage on-board the disruption module 105, storage on-board the identification receiver 102, a remote computing system connected to the disruption module…, or [] any other suitable computing system." Ex. 1001, 9:64-10:4. When describing the claimed functionality of the permissions module 103 (e.g., determining that the aerial system is not permitted to be in an airspace), the patent states that the aerial system parameter permission can be determined by "comparing the aerial system parameters (e.g., identifier, function, etc.) with the permissions for the airspace." *Id*., 18:21-42. Under a §112(f) application, comparing an aerial system parameter, such as an identifier, with the permissions for the airspace would therefore be the algorithm disclosed for performing the claimed function. *MS Gaming, Inc. v. Int'l Game Tech.*, 184 F.3d 1339, 1349 (Fed. Cir. 1999) ("In a means-plus-function claim in which the disclosed structure is a computer, or microprocessor, programmed to carry out an algorithm, the disclosed structure is not the general purpose computer, but rather the special purpose computer programmed to perform the disclosed algorithm").

68. Thus, to the extent the claimed permission module is interpreted under §112(f), its function is "determining that the aerial system associated with the aerial system identifier signal is not permitted to be in an airspace;" and its corresponding structure for performing that function is "storage on-board the disruption system,

storage on-board the identification receiver, a remote computing system connected to the disruption system or any other suitable computing system programmed to compare an aerial system parameter, such as an identifier, with the permissions for the airspace."

IX. TECHNOLOGY BACKGROUND AND STATE OF THE ART

69. In the subsections below, I describe some of the basic principles of engineering that would have been used, or at least considered for use, in the aerospace, avionics, and/or electronics industries. The principles discussed I the subsections below would have been well-known to a POSITA in the 2015 timeframe, and long before. Several of the facts discussed below can be found in standard textbooks, such as *Avionics Navigation Systems* by Kayton and Fried, John Wiley and Sons, 1997 (Ex. 1014), *Counter Unmanned Aircraft Systems Technologies and Operations* by Nichols et al., New Prairie Press, 2020 (Ex. 1018), and *Unmanned Aircraft Systems, UAVS Design, Development and Deployment*, by Reg Austin, John Wiley and Sons, 2010 (Ex. 1019).

A. RADIO TRANSMISSIONS AND ANTENNAE.

70. Radio Frequency transmission is a preferred method of communicating with aircraft, and in particular Unmanned Aerial Systems (UAS). This is because these aircraft are flying in the air, and as such it is not possible to ensure that a physical connection with a cable can be established with them. Therefore, the only

mechanisms of communication that are feasible will require some form of over-the-air transmission. There are only three primary ways in which this can be done:

a. Radio Frequency: The only reasonable and commonly used way to communicate with remote devices without a wire or wirelessly is using radio communication. In this method signals are transcribed in non-visible spectrum electromagnetic radiation and transmitted using an antenna. An antenna is inherently required for any kind of radio frequency communication. Various different part of the electromagnetic spectra are used for radio frequency communication. In the US for example, LTE operates on 600 MHz, 700 MHz, 850 MHz, 1700/2100 MHz, 1900 MHz, and 2500 MHz bands. There are several benefits to using electromagnetic radiation that is not in the visible spectrum. Non-visual spectrum electromagnetic radiation, such as radio waves, enables long-distance transmission, better penetration through obstacles, and reduced scattering compared to the visible light spectrum.

b. Visible spectrum signals: This includes sending signals as visible spectrum light, which can then be perceived by a visual light sensor, such as a cameras or human eyes. This method is often preferred when communicating with humans or animals since they natively perceive

visual spectrum electromagnetic radiation, also referred to as "light". However, it is not a preferred method for communicating with UAS or other aircraft due to its line of sight dependency, limited ability to penetrate obstacles (e.g., clouds, fog, and physical barriers), high susceptibility to scattering and atmospheric interference, and the need for precise alignment between the transmitter and receiver. These limitations make it less reliable than radio frequency (RF) communication, which offers greater range, obstacle penetration, and robustness in diverse environments.

c. Audio signals: Also referred to as sonar, this method requires receivers on both ends that can capture audio signal. This method is heavily limited in its range, and is clearly not a good choice for any kind of sustained communication with a UAS.

71. In summary, an antenna is an indispensable part of a UAS because it facilitates the transmission and reception of electromagnetic signals, enabling essential functions such as remote control, telemetry, data transfer, and communication with other systems. Antennas ensure efficient coupling of radio frequency (RF) energy to the medium (air), support reliable long-range communication, and allow integration with various frequency bands for navigation (e.g., GPS), payload data, and command-and-control links critical to UAS

operations. Without antennas, these communication and navigation capabilities would be significantly impaired.

72. Therefore, a POSITA would find it obvious to consider that a UAS is equipped with an antenna.

B. AIR TRAFFIC MANAGEMENT AND ITS HISTORY WITH RESPECT TO UAS

73. Air Traffic Management System refers to mechanisms, apparatus, and protocols for ensuring that multiple aircraft can fly safely in the same airspace. Unlike ships, which travel on surface, aircraft travel at different altitudes. It is harder to establish a clear line of sight with aircraft due to clouds, fog, glare, or obstacles. Therefore, visual spectrum methods such as Light-houses, signal flags, semaphore, Morse code with light (Aldis Lamp), or other colored lights or patterns are not practical for aircraft. Hence radio frequency-based Air Traffic Management has been an integral part of the growth of the aviation industry. A brief history is below.

1. Early Radio Communication (1920s–1940s):

74. **Initial Adoption**: Radio technology was introduced to aviation in the 1920s, allowing air traffic controllers to communicate directly with pilots instead of relying on visual signals or written messages.

75. **Frequency Allocation**: Early systems used AM (amplitude modulation) frequencies, which were susceptible to interference and eavesdropping.

76. **Need for Secure Channels**: The rapid growth in air traffic during World War II emphasized the importance of reliable and secure communication to avoid collisions and ensure national security.

2. <u>Post-War Developments (1940s–1960s):</u>

77. **Standardization**: ICAO established global standards for aviation radio frequencies in the **VHF (Very High Frequency) band**, typically 118–137 MHz.

78. **Improved Reliability**: VHF offered clearer communication and less interference than AM, and rapidly emerged as the preferred method.

79. **Emerging Security Needs**: Cold War-era aviation brought heightened concerns about unauthorized interception of communications, highlighting the need for secure radio channels.

3. <u>Advent of Automation and Data Links (1970s–1990s):</u>

80. **Secondary Surveillance Radar (SSR)**: Introduced transponders to communicate with radar stations, providing automatic aircraft identification.

81. **Data Link Communication**: Systems like CPDLC (Controller-Pilot Data Link Communications) began supplementing voice communication, reducing reliance on congested radio channels.

82. **Encryption**: Although voice channels remained unencrypted, secure systems for data links started emerging to protect sensitive information from interception.

4. Modernization and ADS-B (2000s–Present):

83. **Satellite Navigation and Surveillance**: Automatic Dependent Surveillance–Broadcast (ADS-B) uses radio frequencies to broadcast aircraft position, altitude, and velocity. However, these broadcasts are unencrypted, raising concerns about spoofing and interception.

84. **Frequency Congestion**: The increasing demand for spectrum by modern systems such as ADS-B and UAS traffic management (UTM) requires careful regulation and secure management to prevent interference.

C. RADIO FREQUENCY COMMUNICATION AND SECURITY CHALLENGES

85. From its inception, radio frequency communication in aviation has been pivotal for ensuring safe operations. Frequencies in the VHF (Very High Frequency) range were adopted to reduce interference and improve clarity. Despite these advancements, early systems lacked encryption, leaving them vulnerable to interception and unauthorized use. The reliance on open channels for voice communication between air traffic controllers and pilots persisted as a legacy feature, even as digital systems began to supplement traditional methods.

86. The introduction of data link communications, such as Controller-Pilot Data Link Communications (CPDLC), provided a partial solution by enabling encrypted exchanges for critical information. Similarly, advancements in cybersecurity and spectrum management have sought to protect the integrity of

communication systems. Nevertheless, technologies like ADS-B continue to operate without encryption, illustrating the tension between accessibility, operational simplicity, and security in aviation systems. Although it should be noted that military versions of ADS-B have used encryption to ensure security.

D. INTEGRATION OF UAS INTO AIRSPACE MANAGEMENT HAVE OBVIOUSLY REQUIRED RADIO FREQUENCY COMMUNICATION AND ENCRYPTION

87. Unmanned Aircraft Systems (UAS) have introduced new complexities to airspace management. Unlike manned aircraft, which operate within well-established ATM frameworks, UAS often function at low altitudes and in urban environments, where traditional radar and transponder-based systems are impractical. In addition, the number of these aircraft in a single unit of airspace could be significantly higher than commercial aviation aircraft. This is because UAS are designed to be small, and often also designed for short duration missions. This would lead to unprecedented congestion of small units of air space. Furthermore, due to their low-flying nature, occlusions are commonplace.

88. Therefore, a POSITA would have been naturally motivated to consider using radio frequency for communication with UAS. This would have included using transponders with antenna and computers that would transmit signals of interest between UAS and ground control stations. In addition, given the very high number of UASs in any given unit of airspace, and the potential for spoofing,

confusion, and other issues, as POSITA would have been naturally motivated to use encryption or other secure channels.

89. The principles underpinning Remote ID are analogous to longstanding practices in ATM, particularly those associated with ADS-B and transponder-based identification. The broadcast of identification and positional information via radio frequencies is not a novel concept; rather, it represents an adaptation of established technologies to meet the unique requirements of UAS. Additionally, the need for secure communication in Remote ID systems reflects a broader aviation priority to mitigate risks associated with unauthorized access, spoofing, and interference.

E. IDENTIFICATION AND TRACKING TECHNOLOGIES

90. Technologies for identifying and tracking friendly and unfriendly aircraft were commonly in use before the priority date of the patent under question.

91. **The Identification Friend or Foe (IFF) system:** IFF systems have been used extensively since the mid-20th century to differentiate friendly and hostile aircraft. By 2015, advanced IFF systems, such as Mode 4 and Mode 5 transponders, were widely implemented in military aircraft. A POSITA would have been motivated to use these types of technologies for drone traffic management, and drone intrusion detection in restricted airspaces.

92. **ASB-S technology:** ADS-B technologies were used to communicate locations of known aircraft via transponders. ADS-B transponders transmit location and unique identifiers, which is similar to what the 199 patent describes.

93. **Radar Based Drone Detection:** Radar based drone detection systems are derived from aircraft detection and tracking systems for manned aircraft. They were widely in use for detection of threats in restricted airspace, including drone based threats. Such systems could use jamming, missiles, or other interdiction mechanisms.

94. **Geofencing:** Geofencing involves marking areas where drones are allowed to and not allowed to operate. An onboard GPS device, which is common on most drones, provides the drone location and depending on the reported location actions such as no-fly, return, or land can be enforced.

F. INTERDICTION OF UNIDENTIFIED (PRESUMED UNFRIENDLY) AIRCRAFT

95. Air Defense systems are concerned with protecting restricted airspace from intrusions from aerial objects. Interdiction systems are technologies or strategies designed to detect, deter, or disable threats, typically aimed at neutralizing adversarial entities before they achieve their objectives. These systems have played a vital role in military, law enforcement, and security applications for decades, evolving significantly over time to address emerging threats.

96. **Early History and Development**: The concept of interdiction traces its roots to traditional defense mechanisms in warfare, where physical barriers, traps, and artillery were used to obstruct or neutralize enemy forces. During the mid-20th century, interdiction evolved with the advent of radar-guided air defense systems. These early systems, developed during World War II and the Cold War, focused on detecting and intercepting incoming aircraft and missiles. Surface-to-air missile (SAM) systems, radar networks, and anti-aircraft guns were among the key technologies developed during this period to create an effective aerial interdiction framework.

97. As technology advanced, interdiction systems diversified to include electronic warfare measures, such as radio jamming and electronic countermeasures, which aimed to disrupt the guidance systems of enemy aircraft and missiles. The concept of interdiction also expanded to naval and ground-based applications, including anti-submarine warfare, minefields, and border control systems.

98. **Transition to Counter-Unmanned Aircraft Systems (C-UAS):** By the early 21st century, the proliferation of unmanned aerial systems (UAS) or uncrewed aerial systems, commonly referred to as drones, introduced a new challenge for interdiction technologies. Initially developed for military surveillance and reconnaissance, drones quickly became accessible for civilian and commercial use. This accessibility, however, also presented security risks, as unauthorized or

hostile drones could be used for espionage, smuggling, or attacks on sensitive infrastructure.

99. To address this emerging threat, interdiction systems were adapted and repurposed into Counter-Unmanned Aircraft Systems (C-UAS). Early C-UAS efforts focused on leveraging existing radar and electronic warfare technologies to detect, identify, and neutralize drones. These systems consisted of a mechanism to interfere with the target drone's flight, and were by their nature preemptively enabled whenever events triggered activation, such as drones being within range, security alters, etc.

100. Key adaptations included:

101. **Detection and Tracking**: Traditional radar systems were enhanced to detect small, low-flying, and slow-moving drones, which posed detection challenges due to their size and flight patterns.

102. **Electronic Countermeasures**: Building on radio jamming technologies, C-UAS systems employed radio frequency (RF) jammers to disrupt the communication links between drones and their operators, effectively disabling them.

103. **Kinetic and Non-Kinetic Interception**: C-UAS systems explored various means of physically or electronically neutralizing drones. Kinetic methods

included net launchers and interceptor drones, while non-kinetic approaches used high-power microwaves or directed energy to disrupt onboard electronics.

104. **Sensor Fusion**: Multi-sensor systems combining radar, acoustic sensors, optical cameras, and RF detectors were developed to improve detection accuracy and minimize false positives.

105. A POSITA would have been aware of existing technologies for defense against unauthorized drones, since incidences involving unauthorized drones were increasingly common since 2010. In addition, it would have been natural for a POSITA to start from the state-of-the-art in air defense systems, counter UAS systems, and obvious to develop an interdiction system that can be preemptively enabled for defense against unauthorized UAS.

X. OVERVIEW OF THE PRIOR ART

A. *WHITMARSH* (EX. 1005)

1. Status of *Whitmarsh*

106. *Whitmarsh* is a U.S. Patent Application Publication filed December 8, 2016, as PCT App. No. PCT/US16/65606, and published on January 3, 2019. Ex. 1005. *Whitmarsh* claims priority to U.S. Provisional Application No. 62/267,393 (Ex. 1006, "*Whitmarsh Provisional*") filed on December 15, 2015, which is before the March 17, 2016 priority date of the '199 Patent. The portions of *Whitmarsh* on which I rely are supported by *Whitmarsh Provisional*.

2. **Overview of the Disclosure of *Whitmarsh* and *Whitmarsh Provisional***

107. Like the '199 Patent, *Whitmarsh* describes a "UAV [unmanned aerial vehicle] defense system" 10 that determines whether a UAV is authorized to be in a certain area. Ex. 1005, [0002], [0013], [0028], [0033], [0050]; Ex. 1006, [0001] ("The present invention relates to defense systems in general and more particularly to systems for defending against unauthorized incursions by unmanned aerial vehicles."), [0009] ("The primary function of the RTSS [remote transmission security system] is to identified [sic] and detect unauthorized or hostile drones in and around the area or region that is to be protected."), [0010] ("RTSS determines threat level and identifies (IDs) the drones. In one embodiment, the RTSS identifies, classifies, and categorizes the unauthorized or hostile drones by their signatures."), [0013] ("The DDS [drone defense system] will be able to determine between friendly and hostile drones."). If the UAV is not authorized, *Whitmarsh* develops and deploys a "countermeasures system" to disable the UAV or otherwise remove it from a given area. Ex. 1005, [0017]-[0018]; Ex. 1006, [0011], [0018]. Thus, *Whitmarsh* is from the same field of art as the '199 Patent and describes a defense system similar to the system described in the '199 Patent.

B. *VIGGIANO* (EX. 1007)

1. Status of *Viggiano*

108. "*Viggiano*" is a U.S. Patent Application Publication filed on April 7, 2006, and published on October 11, 2007, both of which are before the earliest possible priority date of the '199 Patent.

2. Overview of the Disclosure of *Viggiano*

109. *Viggiano* describes "authentication apparatus" that "employs an authentication challenge-response methodology and encryption techniques to authenticate the identity of an ADS-B [Automatic Dependent Surveillance-Broadcast] equipped aircraft." Ex. 1007, [0012]. The authentication apparatus further determines if the identity of an ADS-B equipped aircraft is "authenticated" and, if the authentication fails, it notifies "responsible higher command authority" or "other ADS-B equipped aircraft, vehicles, vessels or stations," to take further action. Id., [0015]. Thus, *Viggiano* is from the same field of art as the '199 Patent and describes an aircraft authentication system that is similar to the system described in the '199 Patent.

C. *GOODRICH* (EX. 1008)

1. Status of *Goodrich*

110. "*Goodrich*" is a U.S. Patent Application Publication filed on July 16, 2015 and published on January 28, 2016, both of which are before the earliest possible priority date of the '199 Patent.

2. Overview of the Disclosure of *Goodrich*

111. *Goodrich* discloses a counter-UAV system that deploys "an interceptor UAV 110 configured to disable or destroy a target UAV 199." Ex. 1008, [0011], [0014]. Upon detecting a "target UAV," the counter-UAV system tracks the path of the target UAV (e.g., by determining the "azimuth, elevation, and range of the target UAV"), calculates an "intercept track for the interceptor UAV 110," and then "launch[es]" the interceptor UAV 110. Id., [0024]. When the interceptor UAV is in range of the target UAV, an "engagement decision" is made to direct the interceptor UAV to either "abort" the intercept track and return to its base or engage the target UAV by executing a "terminal maneuver." Id., [0027]-[0030]. *Goodrich* explains that a "terminal maneuver" may comprise various techniques for disabling the target UAV, including deploying a "disabling system 150 . . . that make[s] contact with, tangle with, and/or otherwise disable the target UAV." Id., [0031]. Thus, *Goodrich* is from the same field of art as the '199 Patent and describes an aircraft disruption system that is similar to the system described in the '199 Patent.

D. *FALK* (EX. 1011)

1. Status of *Falk*

112. "*Falk*" is a U.S. Patent filed on October 6, 2017, and published on July 11, 2016 and issued on October 31, 2017. Ex. 1011. *Falk* claims priority to U.S. Provisional Application No. 62/301,858 (Ex. 1012, "*Falk Provisional*") filed on

March 1, 2016, which is before the priority date of the ’199 Patent. The portions of *Falk* on which I rely are supported by *Falk Provisional*.

2. Overview of the Disclosure of *Falk* and *Falk Provisional*

113. *Falk* discloses a “beacon” that is “attached to an unmanned aerial vehicle” and “includes an attachment mechanism configured to securely and removably attach the [beacon] to the unmanned aerial vehicle.” Ex. 1011, 3:35-36; Ex. 1012 [0009]. “The beacon includes first indicia identifying an owner or responsible party, and second indicia identifying a particular unmanned aerial vehicle. At least a portion of the first and second indicia together form a unique identifier associating the owner or responsible party with the unmanned aerial vehicle.” Ex. 1011, 3:42-47; Ex. 1012, [0010]. *Falk* further provides that the beacon “may also include” a “remote communications module configured to participate on at least one wireless communications system as well as transmit and receive information across the at least one wireless communications system to and from a remote operator.” Ex. 1011, 3:56-64; Ex. 1012, [0011]. Thus, *Falk* is from the same field of art as the ’199 Patent and describes an identifier transmission system similar to the system described in the ’199 Patent.

XI. GROUND 1: WHITMARSH RENDERS OBVIOUS CLAIMS 1-3 AND 5-9

A. CLAIM 1

1. 1[p]: A discrimination system comprising:

114. To the extent the preamble is limiting, *Whitmarsh* discloses the preamble through its disclosure of a UAV defense system. *Whitmarsh* describes a "UAV defense system" 10 that determines whether a UAV is authorized to be in a certain area. Ex. 1005, [0002], [0013], [0028], [0033], [0050]; Ex. 1006, [0001] ("The present invention relates to defense systems in general and more particularly to systems for defending against unauthorized incursions by unmanned aerial vehicles."), [0009] ("The primary function of the RTSS [remote transmission security system] is to identified [sic] and detect unauthorized or hostile drones in and around the area or region that is to be protected."), [0010] ("RTSS determines threat level and identifies (IDs) the drones. In one embodiment, the RTSS identifies, classifies, and categorizes the unauthorized or hostile drones by their signatures."), [0013] ("The DDS [drone defense system] will be able to determine between friendly and hostile drones.").

115. Accordingly, *Whitmarsh*'s system "*discriminates*" between authorized/friendly and unauthorized/hostile drones to provide security to a protected area, and therefore discloses Limitation 1[p].

2. 1[a]: an identifier transmission system coupled to an aerial system, wherein the identifier transmission system is configured to broadcast an aerial system identifier signal unique to the aerial system;

116. *Whitmarsh* discloses, or at least renders obvious, Limitation 1[a] through its disclosure of its UAV defense system receiving wireless communications that include a MAC address associated with a UAV. *Whitmarsh* describes that its UAV defense system receives from nearby UAVs wireless communications that include information or signatures unique to the UAVs, such as a MAC address of the UAV, that is used to identify the transmitting UAV. *See* Ex. 1005, [0020] ("UAVs 114 are provided with one or more wireless communication system(s) 56 that periodically broadcast radio signals 54. . . . The information that is periodically broadcast by the wireless communication system(s) 56 of UAV 14 typically includes at least a beacon frame which contains ***certain information and data about the UAV 14, including its media access control address or MAC address***."), [0027] ("First, the UAV defense system 10 is able to identify the UAVs 14 by passive means, i.e., by simply detecting radio signals 54 that are periodically broadcast by the UAVs 14. . . . Second, ***the information broadcast by the UAVs 14 not only allows the UAV defense system 10 to detect them, but also allows the UAV defense system 10 to identify and control the detected UAVs 14. For example, by capturing the MAC address, which is unique to each UAV 14, the UAV defense system 10 will be able to specifically identify the detected UAV 14***.") (emphasis added); Ex. 1006, [0008]

("The RTSS constantly analyzes all of the parameters of the network that it is monitoring ***and it continuously processes all information from different UAS or drone signatures*** that are hostile and non-hostile that come within a 10-mile, 5-mile, and 1-mile area of a defined airspace system that is to be protected."), [0010] ("In one embodiment, the ***RTSS identifies, classifies, and categorizes the unauthorized hostile drones by their signatures***."), [0013] ("***All drones have a unique identifier, such as a media access control (MAC) address, that can be determined or read by the DDS*** [drone defense system] and can be used to identify the drone."), [0015] ("***In some embodiments, the DDS constantly scans and surveys WIFI, RF, and sensor signals***"), [0016] ("***The DDS monitors all signals and distinguishes between non-drones and UAV or UAS***. In one embodiment, all tracked drones are considered rogue. ***All drones with definable MAC addresses are tagged by the DDS.*** All non-MAC address drones activate the countermeasures system."), [0017] ("***DDS Tags all drones and does a MAC address check*** at the local and national registry.") (emphasis added).

117. A POSITA would have understood that because *Whitmarsh*'s drone defense system receives wireless communications/signals that indicate a MAC address of a UAV/UAS (which identifies the UAV/UAS), the UAVs disclosed by *Whitmarsh* include a component for transmitting such communications/signals. Indeed, it was well-known in the art that UAVs would include such a component for

performing wireless communication. *See, e.g.*, Ex. 1015, [0024] (describing a UAV comprising a "communication unit configured to receive or transmit wireless communications"); Ex. 1016 [0060], [00141] (describing a "communication terminal 1200 can be implemented by a mobile platform (e.g., UAV) or other remotely-controlled movable object capable of transmitting downlink data and receiving uplink data" in a wireless communication environment, and that "communication terminal 1200 includes an uplink receiver 1204, a downlink transmitter 1202, and an antenna 1206."). Accordingly, a POSITA would have understood that *Whitmarsh*'s UAVs are "*aerial systems*" that are "*coupled to*" an "*identifier transmission system*" that broadcasts a MAC address ("*identifier*") of the UAV.

118. In the alternative, it would have been obvious to a POSITA that *Whitmarsh*'s UAVs would be coupled to "*an identifier transmission system*" in view of *Whitmarsh*'s disclosure of receiving wireless communications/signals containing a MAC address of UAVs from the UAVs. A POSITA would have considered it obvious that a UAV would include (be "*coupled to*") a transmission system in order to perform any wireless communication, as such a transmission system was well-known in the art. *See, e.g.*, Ex. 1015, [0024]; Ex. 1016, [0060], [00141].

119. Finally, the wireless communications/signals comprising MAC address information discloses "*an aerial system identifier signal unique to the aerial*

system," because these signals include a MAC address of the UAV, which *Whitmarsh* describes as unique information that is used to identify the associated UAV. *See* Ex. 1005, [0027] ("For example, by capturing the MAC address, which is unique to each UAV 14, the UAV defense system 10 will be able to specifically identify the detected UAV 14."); Ex. 1006, [0013] ("All drones have a unique identifier, such as a media access control (MAC) address, that can be determined or read by the DDS and can be used to identify the drone.").

120. Accordingly, *Whitmarsh*'s disclosure of transmitting the MAC address in wireless communications/signals to the UAV defense system discloses, or at least renders obvious, Limitation 1[a].

3. <u>1[b]: an identification receiver;</u>

121. *Whitmarsh* discloses, or at least renders obvious, Limitation 1[b] at least through its disclosure of its UAV defense system. As discussed above with reference to Limitation 1[a], *Whitmarsh* describes that its UAV defense system receives from nearby UAVs wireless communications that include information or signatures unique to the UAVs, such as a MAC address of the UAV, that is used to identify the broadcasting UAV. *Supra*, VIII.A.1.(b); Ex. 1005, [0020], [0027]; Ex. 1006, [0008], [0010], [0013], [0015]-[0017]. Accordingly, a POSITA would have understood that *Whitmarsh*'s UAV defense system comprises "*an identification receiver*" that acts as the component for actually receiving these wireless

communications and the identification information (*e.g.*, the MAC address) contained therein. Such a component was well-known in the art. *See, e.g.*, Ex. 1015, [0046] (describing "and an air control system configured to receive a UAV identifier for the authenticated UAV").

122. In the alternative, it would have been obvious to a POSITA that *Whitmarsh*'s UAV defense system includes an "*identification receiver*" in view of *Whitmarsh*'s disclosure of receiving wireless communications/signals containing MAC address that identifies the broadcasting UAV. It would have been obvious to a POSITA that *Whitmarsh*'s UAV defense system comprises "*an identification receiver*" that acts as the component for actually receiving these wireless communications and the identification information (*e.g.*, the MAC address) contained therein. Indeed, such a component was well-known in the art. *See, e.g.*, Ex. 1015, [0046].

4. <u>1[c]: a permission module,</u>

123. I discuss in Limitation 1[e] below why *Whitmarsh* discloses, or at least renders obvious, Limitation 1[c]. *See* XI.A.6.

5. <u>1[d]: wherein the identification receiver is configured to receive the aerial system identifier signal and to provide the aerial system identifier signal to the permission module,</u>

124. As discussed above with reference to Limitation 1[b] and below with reference to Limitation 1[e], *Whitmarsh* discloses, or at least renders obvious, a

UAV defense system that comprises (1) an "*identification receiver*" that receives wireless communications that include a unique MAC address that identifies a transmitting UAV ("*wherein the identification receiver is configured to receive the aerial system identifier signal*") and (2) a "*permission module*" that determines to deploy a particular countermeasure based at least in part on the detected UAV's identity. *Supra*, X.A.3; *infra*, X.A.6. And as discussed above with reference to Limitation 1[a], *Whitmarsh* explains that the UAV's identity is determined based on the MAC address contained in the received wireless communication. *Supra*, X.A.2. Accordingly, a POSITA would have understood that for the "*permission module*" to use the UAV's identity (as indicated by the received MAC address) to determine to deploy a particular countermeasure, the "*identification receiver*" would have first provided the wireless communication comprising the MAC address ("*the aerial system identifier signal*") to the "*permission module*."

125. In the alternative, it would have been obvious to a POSITA that the UAV defense system's "*identification receiver*," which receives wireless communications that include a unique MAC address, would provide to the "*permission module*," which determines to deploy a particular countermeasure based at least in part on the detected UAV's identity, because the MAC address contained in the received wireless communication indicates a transmitting UAV's identity. Ex. 1005, [0027]; Ex. 1006, [0013]. Accordingly, it would have been obvious to a

POSITA that in order for the permission module to determine the UAV identity based on the MAC address, the "*identification receiver*" would have first provided the wireless communication comprising the MAC address ("*the aerial system identifier signal*") to the "*permission module*."

6. 1[e]: wherein the permission module is configured to determine that the aerial system associated with the aerial system identifier signal is not permitted to be in an airspace; and

126. In my opinion, *Whitmarsh* discloses, or at least renders obvious, this limitation, regardless of whether the "*permission module*" term is subject to §112(f).

a) Function:

127. *Whitmarsh* discloses, or at least renders obvious, the claimed function "determin[ing] that the aerial system associated with the aerial system identifier signal is not permitted to be in an airspace." *Whitmarsh* discloses that after its UAV defense system receives a MAC address from a UAV within its area, the UAV defense system determines if a countermeasure against the detected UAV should be performed "based on the identity and/or position of the detected UAV 14." Ex. 1005, [0017]; Ex. 1006, [0013] ("The DDS will be able to determine between friendly and hostile drones."), [0016] ("All drones with definable MAC addresses are tagged by the DDS. All non-MAC address drones activate the countermeasures system."), [0017] ("DDS Tags all drones and does a MAC address check at the local and national registry. If no MAC address is detected, or if it is not registered, the DDS

activates the countermeasures system. All drones MAC addresses are recorded at the national and local registry. . . . Only drones registered on the local registry as 'friendly' or 'authorized' will allowed to travel from x miles marks to point zero."), [0018] ("2) Drones are considered unauthorized or hostile if they have no registration from their MAC addresses. 3) Drones are considered hostile and activate the countermeasures system if they have a MAC address but it's not registered with the local registry or no MAC address and has crossed the 5 mile safe zone.").

128. *Whitmarsh* explains that upon receiving a UAV identity, the UAV defense system may "interface with a UAV registry database 36" to allow the UAV defense system to "correlate the unique MAC addresses of the UAV systems with information relating to the identity of the persons or entities that acquired the UAV 14," as well as "update such a UAV database 36 with information and data relating to prior detection and countermeasures activities, thereby allowing troublesome or suspect UAVs 14 to be identified so that appropriate action can be taken." Ex. 1005, [0029]; Ex. 1006, [0010] ("Each tracking signature may be processed in conjunction with one or more information databases, including, for example a local database or a national database (the national registry database structure is currently being defined) to record the signature of each non-recognized signature and each event. … If the tracking signature matches a rule in the logic system that the unauthorized or

hostile drone's identification signatures are a threat, the RTSS 'tags' the drone as unauthorized or even as hostile.").

129. And *Whitmarsh* explains that a determined countermeasure may be a "disable countermeasure" that is "used to actually disable the detected UAV." Ex. 1005, [0018], [0028] ("However, more robust countermeasures may be employed in other circumstances and may ultimately involve the immediate interception of the unauthorized UAV 14."); Ex. 1006, [0009] ("The system creates a buffer between the protected facility and the unauthorized or hostile drone with specific countermeasures applied to each zone."), [0010] ("If the tracking signature matches a rule in the logic system that the unauthorized or hostile drone's identification signatures are a threat, the RTSS 'tags' the drone as unauthorized or even as hostile. Immediately, a series of processes are started to determine what rule of engagement will be applied on the intruding drone."), [0011] (describing (1) an "intercept" countermeasure wherein "armed drone systems" are notified "that there is an intrusion in the protected area" and "then intercept (e.g., shoot down) the unauthorized or hostile drone" and (2) a "drone destruct" countermeasure wherein a hostile or unauthorized drone is caused "to self-destruct or otherwise become inoperable (e.g., by initiating a power overload in the drone's power supply system")), [0017]-[0018].

130. Accordingly, a POSITA would have understood, or at least considered it obvious, that *Whitmarsh*'s UAV defense system discloses the claimed determining functionality based on its description of determining to deploy a disabling countermeasure based at least in part on the detected identity of the unauthorized UAV. That is, a POSITA would have understood, or at least considered it obvious, that by determining to deploy a disabling countermeasure based at least in part on the detected identity of the unauthorized UAV, the UAV defense system would have determined that the UAV does not have permission to be in a given area.

b) Structure:

131. *Whitmarsh* discloses, or at least renders obvious, the claimed "*permission module*" regardless of whether that term is subject to §112(f). As discussed above, *Whitmarsh*'s UAV defense system discloses, or at least renders obvious, the claimed determining functionality. *Supra*, XI.A.6.(a). POSITA would have understood, or considered it obvious, that *Whitmarsh*'s UAV defense system would comprise a "*permission module*" to perform its disclosed functionality of determining to deploy a particular countermeasure based at least in part on the detected UAV's identity. A POSITA would have understood that this functionality—generally, computing a decision based on inputted information—is routinely performed by well-known computing and/or processing components of electronics systems, so that it would have been obvious to a POSITA that such

functionality would be performed by a computer system, processor, or similar component of the UAV defense system that is configured to determine an outcome based on inputted data. *See, e.g.*, Ex. 1005, [0045] (describing that the disclosed determination of countermeasures may be "implemented on or more general purpose computer(s) programmed with executable instructions that, when executed, cause the computer(s) to perform the various steps and operations" described by *Whitmarsh*), Ex. 1015, [0030] (describing the use of "one or more processors configured to individually or collectively: authenticate an identity of a UAV, wherein the identity of the UAV is uniquely distinguishable from other UAVs"); [0300] (describing that a UAV may need to be authenticated to "operate within a selected airspace, such as a restricted region"). Such an understanding is consistent with the '199 Patent's disclosure that its permission module could be "storage on-board the disruption module 105, storage on-board the identification receiver 102, a remote computing system connected to the disruption module…, or [] any other suitable computing system." Ex. 1001, 9:64-10:4.

132. And if "*permission module*" is subject to §112(f), *Whitmarsh* discloses, or at least renders obvious, the corresponding structure – "storage on-board the disruption system, storage on-board the identification receiver, a remote computing system connected to the disruption system or any other suitable computing system programmed to compare an aerial system parameter, such as an identifier, with the

permissions for the airspace." *See supra*, VIII.A. As discussed above, *Whitmarsh* determines that the aerial system associated with the aerial system identifier signal is not permitted to be in an airspace by "interfac[ing] with a UAV registry database 36" to allow the UAV defense system to "correlate the unique MAC addresses of the UAV systems with information relating to the identity of the persons or entities that acquired the UAV 14," such as "information and data relating to prior detection and countermeasures activities, thereby allowing troublesome or suspect UAVs 14 to be identified so that appropriate action can be taken." *Supra*, XI.A.6.(a); Ex. 1005, [0029]; Ex. 1006, [0010]. A POSITA would have understood, or at least considered it obvious, that this correlation would involve "compar[ing]" the "unique MAC addresses of the UAVs" (*i.e.*, "aerial system parameter, such as an identifier") with "information and data relating to prior detection and countermeasures activities" (*i.e.*, "the permissions for the airspace") to allow the system to identify "troublesome or suspect UAVs." And it would be a computer system or processor of *Whitmarsh* programmed to perform this "comparing" step. *See, e.g.*, Ex. 1005, [0045]; Ex. 1015, [0030], [0300]. Accordingly, *Whitmarsh* discloses, or at least renders obvious, the corresponding structure for performing the claimed function.

7. 1[f]: a disruption system configured to disrupt an operation of the aerial system, wherein the disruption system is preemptively enabled based the received aerial system identifier signal

133. *Whitmarsh* discloses Limitation 1[f] at least through its disclosure of determining a countermeasure upon identifying a detected UAV at an extended distance from a protected asset. *Whitmarsh* describes a countermeasures system that "develops one or more countermeasures based on the identity and/or position of the detected UAV 14," where the identity of the detected UAV is determined based on a MAC address included in a wireless communication received by the UAV defense system. Ex. 1005, [0017], [0027]; Ex. 1006, [0010] ("The behavior of the unauthorized or hostile drone is recorded with its signature identification. If the tracking signature matches a rule in the logic system that the unauthorized or hostile drone's identification signatures are a threat, the RTSS 'tags' the drone as unauthorized or even as hostile. Immediately, a series of processes are started to determine what rule of engagement will be applied on the intruding drone."), [0016]-[0018] (describing activating "the countermeasures system" based on a received MAC address identifier of a UAV); *supra*, X.A.2, X.A.5 (describing the UAV defense system determining the detected UAV's identity based on the received MAC address).

134. The determined countermeasure may be, for example, an "intercept countermeasure" wherein "the UAV defense system 10 may dispatch one or more

security vehicles 44 and operate it so that it actually collides with the detected UAV 14." Ex. 1005, [0017]-[0018], [0028] ("However, more robust countermeasures may be employed in other circumstances and may ultimately involve the immediate interception of the unauthorized UAV 14."); Ex. 1006, [0010]-[0011] (describing that the intercept countermeasure may be used in response to determining that a detected UAV is unauthorized or hostile). Accordingly, *Whitmarsh*'s countermeasures system discloses "*a disruption system configured to disrupt an operation of the aerial system*."

135. Further, *Whitmarsh* describes determining these countermeasures when a UAV is identified as many as five miles from a protected asset. Ex. 1005, [0031] ("UAVs 14 located in the intermediate detection zone 26 may be more carefully scrutinized and limited countermeasures applied."), [0036] (explaining that the "intermediate detection zone" may extend between the 5-mile and 1-mile radiuses from "the primary defense point 28 that is to be protected"); Ex. 1006, [0017] ("In one embodiment, MAC addresses are checked at the tracking and tagged stages at 10 and 5 mile marks. Untracked drones that show up under the 5 mile mark may activate the countermeasure system. Only drones registered on the local registry as 'friendly' or 'authorized' will allowed to travel from x miles marks to point zero."), [0018] ("Drones are considered hostile and activate the countermeasures system if

they have a MAC address but it's not registered with the local registry or no MAC address and has crossed the 5 mile safe zone.”).

136. A POSITA would have understood that in first determining a countermeasure in response to receiving a wireless communication including the MAC address of an unauthorized UAV (“*the received aerial system identifier signal*,” *see supra*, XI.A.2, XI.A.5) that is 5 miles from a protected asset, *Whitmarsh*’s countermeasure system (“*disruption system*”) is “*preemptively enabled*” because it is enabled before the detected UAV is within range of a protected asset. A POSITA would have understood that by activating the countermeasures system when an unauthorized UAV is detected 5 miles from a protected asset, the countermeasures system has time to develop and deploy an appropriate countermeasure ***before*** the detected UAV is proximate to, and at risk of damaging or otherwise interfering with, the protected asset. A POSITA would also have understood that detection range is a good way to preemptively enable the countermeasure system. Thus, *Whitmarsh* discloses “*preemptively enabl[ing]*” its countermeasures system.

137. This preemptive enabling of *Whitmarsh*’s countermeasure system based on the MAC address of an unauthorized UAV is consistent with the ’199 Patent, which explains that the “the disruption system 105 may thus be preemptively enabled if certain conditions are met (e.g. aerial system detected w/o an identifier

500, ***identifier is received but is invalid 501, identifier is valid but is not permissioned 502***, etc.)." Ex. 1001, 19:16-20.

138. Accordingly, *Whitmarsh* discloses Limitation 1[f].

B. <u>CLAIM 2</u>

1. <u>The system of claim 1, wherein the identifier transmission system and the identification receiver communicate using a radio chipset that is compatible with a communication protocol selected from the following: WiFi, LTE, or Bluetooth.</u>

139. As discussed above with reference to Limitation 1[a], *Whitmarsh* discloses a drone defense system that monitors wireless communications for signals transmitted by UAVs that include information that identifies the UAVs. *Supra*, XI.A.1; Ex. 1005, [0020], [0027]; Ex. 1006, [0008], [0013], [0015]-[0017]. *Whitmarsh* further describes that these signals may be transmitted according to the WiFi protocol. Ex. 1005, [0039]-[0041] ("The sensor network 12 and the various radios 18 comprising the sensor network 12 may comprise any of a wide range of systems and devices now known in the art or that may be developed in the future that are (or would be) suitable for detecting radio signals produced by UAVs 14 and for producing radio signals that can be received by the UAVs 14. . . . Supported medium range protocols include ZigBee, 802.15.4, DigiMesh, and WiFi."); Ex. 1006, [0015] (describing that the drone defense system "scans and surveys WIFI, RF, and sensor signals" to identify drones in an area).

140. Accordingly, a POSITA would have understood that *Whitmarsh*'s "*identifier transmission system*" (which transmits signals from a UAV to the UAV defense system, *see supra*, XI.A.2) and "*identification receiver*" (which receives signals from the UAV, *see supra*, XI.A.3) use a "radio chipset that is compatible with" the WiFi communication protocol in view of *Whitmarsh*'s disclosure of these components communicating via WiFi signals.

141. In the alternative, it would have been obvious to a POSITA that *Whitmarsh*'s "*identifier transmission system*" and "*identification receiver*" use a "radio chipset that is compatible with" the WiFi communication protocol in view of *Whitmarsh*'s disclosure of these components communicating via WiFi signals.

C. CLAIM 3

1. The system of claim 1, wherein the identification receiver is a mobile device.

142. *Whitmarsh* discloses that its UAV defense system may deployed in a variety of mobile environments, including "on an aircraft to protect such aircraft against UAVs," and "[s]ea-based applications" such as on a "ship or vessel." Ex. 1005, [0066]; Ex. 1006, [0004] ("Other embodiments may be configured for use on aircraft (commercial and passenger jets, helicopters, and military aircraft, including military drones), ships, submarines, and land vehicles."). A POSITA would have understood that in such implementations, *Whitmarsh*'s "*identification receiver*" (see

supra, XI.A.3), which is a component of the UAV defense system, would be a "*mobile device*," because it located on a mobile vehicle such as an aircraft or a ship.

D. CLAIM 5

1. The system of claim 1, wherein when the disruption system is enabled the aerial system is caused to be removed from the airspace.

143. As discussed above with reference to Limitation 1[f], *Whitmarsh* discloses developing and deploying various countermeasures against a detected UAV, including an "intercept countermeasure" wherein the countermeasures system ("*the disruption system*") "may dispatch one or more security vehicles 44 and operate it so that it actually collides with the detected UAV 14." *Supra*, XI.A.7; Ex. 1005, [0017]-[0018]; Ex. 1006, [0011] (describing the intercept countermeasure). A POSITA would have understood that when the intercept countermeasures is executed, the collision between the dispatched security vehicle(s) and the detected UAV would have resulted in damage to the detected UAV such that it would have been "*removed from the airspace*" (e.g., as a result of falling to the ground). Accordingly, *Whitmarsh* discloses Claim 5 when it executes the intercept countermeasure.

E. CLAIM 6

1. The system of claim 1, wherein the disruption system comprises of a projectile launcher and an interdiction module.

144. *Whitmarsh* discloses, or at least renders obvious, Claim 6 at least through its teaching of an intercept countermeasure wherein an armed drone system shoots down a detected UAV. *Whitmarsh Provisional* (Ex. 1006), which is incorporated by reference in *Whitmarsh*, discloses an intercept countermeasure performed by the countermeasures system wherein "armed drone systems" are deployed to "intercept (e.g., shoot down) the unauthorized or hostile drone." Ex. 1006, [0011]; Ex. 1005, [0001] (incorporating by reference *Whitmarsh Provisional*). A POSITA would have understood that when implementing the intercept countermeasure, *Whitmarsh*'s UAV defense system ("*the disruption system*") comprises armed drone systems that include a "*projectile launcher*" and projectiles ("*interdiction module[s]*") that are used to "shoot down" the detected UAV.

145. In the alternative, it would have been obvious to a POSITA that in order for *Whitmarsh*'s "armed drone systems" to "shoot down" a detected UAV, these drones would need to be equipped with projectiles (*e.g.*, bullets) that are show as well as a "*projectile launcher*" for shooting the projectiles. Accordingly, it would have been obvious that when implementing the intercept countermeasure, *Whitmarsh*'s UAV defense system ("*the disruption system*") comprises armed drone

systems that include a "*projectile launcher*" and projectiles ("*interdiction module[s]*") that are used to "shoot down" the detected UAV.

146. This understanding of *Whitmarsh*'s projectiles used to "shoot down" a detected UAV as "*interdiction module[s]*" is consistent with the '199 Patent, which identifies "a set of masses (e.g., bullets) that physically intercept the aerial system motive mechanism and/or electronics" as "a second variation" of "the interdiction module." *See* Ex. 1001, 11:58-60; *see also id*., 11:61-63 ("The set of masses can include a single mass (e.g., one bullet), a plurality of masses (e.g., birdshot), or any other suitable number of masses."). Accordingly, *Goodrich* discloses Claim 6.

F. CLAIM 7

1. The system of claim 1, wherein the disruption system comprises of an interceptor drone coupled with an interdiction module.

147. As discussed above with reference to Claim 6, *Whitmarsh*'s countermeasures system ("*the disruption system*") comprises an armed drone system that shoots down a detected UAV. *See supra*, XI.E; Ex. 1006, [0011]; Ex. 1005, [0001]. And as discussed with reference to Claim 6, a POSITA would have understood, or at least considered it obvious, that the armed drone system comprises ("*is coupled with*") a "projectile launcher" that shoots projectiles ("*an interdiction module*") at the detected UAV. *See supra*, XI.E. Accordingly, *Whitmarsh* discloses, or at least renders obvious, discloses Claim 7 for the same reasons.

G. CLAIM 8

1. The system of claim 1, further comprising a control system for controlling the disruption system.

148. As discussed above with reference to Limitation 1[f], *Whitmarsh*'s countermeasures system ("*disruption system*") may develop a "commandeer countermeasure" wherein the detected UAV is caused "to follow instructions from the UAV defense system 10 rather than from the original operator of the detected UAV 14." *Supra*, VIII.A.1.(g); Ex. 1005, [0017]; Ex. 1006, [0011]. A POSITA would have understood that to control a detected UAV in such a manner, the UAV defense system would also implement a "control system" that would provide instructions to the detected UAV through the countermeasure system, effectively controlling both the countermeasures system and the detected UAV. *See, e.g.*, Ex. 1005, [0017] (describing that the UAV defense system may utilize "processing system 46 and the various radio transceivers 18" to effectuate the commandeer countermeasure).

149. In the alternative, it would have been obvious to a POSITA that *Whitmarsh*'s UAV defense system would comprise a "control system" that would provide instructions to the countermeasures system ("*control the disruption system*") for controlling the commandeered UAV. As discussed above with reference to Limitation 1[f], *Whitmarsh*'s countermeasures system ("*the disruption system*") is configured to develop a countermeasure to enforce against a detected UAV. Supra,

XI.A.7. It would have been obvious to a POSITA to implement additional components, such as a "control system," to control the countermeasures system when it is implementing the commandeering countermeasure, as this measure involves additional functionality of providing to the commandeered UAV instructions, which a POSITA would have recognized is better handled by a distinct component of the UAV defense system (e.g., a separate computing system or processer). *See, e.g.*, Ex. 1005, [0017].

150. Accordingly, *Whitmarsh* discloses, or at least renders obvious, Claim 8.

H. CLAIM 9

1. The system of claim 8, further comprising a logging system that is configured to record activity of at least one of the identification receiver, the permission module, or the control system.

151. *Whitmarsh* discloses, or at least renders obvious, Claim 9 at least through its teaching of recording signature information of a detected UAV. *Whitmarsh* Provisional (Ex. 1006), which is incorporated by reference in *Whitmarsh*, discloses recording "the signature of each non-recognized signature" received from a detected UAV. As discussed above with reference to Limitation 1[b], *Whitmarsh* discloses, or at least renders obvious, an "identification receiver" that receives wireless communications that include a MAC address, where the MAC address operates as an identifier, or signature, of the associated UAV. *See supra*, XI.A.3.

Accordingly, a POSITA would have understood that *Whitmarsh* discloses a "*logging system*" that records any non-recognized signatures (e.g., MAC address) received from detected UAVs at the "*identification receiver*," which constitutes recording the activity of the "*identification receiver*" (*i.e.*, the information received by the "*identification receiver*" during its operation).

152. Further, *Whitmarsh* discloses that "[l]ocal database 32 may also be used to store information and data relating to the operation of the UAV defense system 10 for subsequent analysis, troubleshooting, or system diagnostics." Ex. 1005, [0046]; Ex. 1006, [0010] (describing the recording of non-recognized signatures received from a detected UAV). A POSITA would have understood that in this role, the local database 32 operates as a "*logging system*" that is configured to record activity of the UAV defense system and its components (*e.g.*, "*the identification receiver*," "*the permission module*," and "*the control system*") and therefore discloses Claim 9.

153. In the alternative, it would have been obvious to a POSITA that *Whitmarsh*'s UAV defense system would comprise a "*logging system*" for recording the activity of the "*identification receiver*" (i.e., the reception of any non-recognized signatures, such as MAC addresses, received from detected UAVs), because recording information is a distinct function that is handled by memory components of a system. Accordingly, it would have been obvious to a POSITA that any

recording that occurs in a system would be handled by a "logging system" such as a memory component.

154. This understanding is consistent with the '199 Patent, which explains that the "logging system" "functions to store and/or provide histories for aerial system identifiers 310," wherein said histories may be generated "in response to aerial system identification within the airspace (e.g., wherein the logging system can be coupled to the identification receiver)." Ex. 1001, 13:34-52.

155. Thus, *Whitmarsh* discloses, or at least renders obvious, Claim 9.

XII. GROUND 2: WHITMARSH AND FALK RENDER OBVIOUS CLAIM 4

A. MOTIVATION TO COMBINE

1. Whitmarsh and Falk

156. *Whitmarsh* discloses a UAV defense system that receives wireless communications from nearby UAVs that include information or signatures unique to the UAVs, such as a MAC address of the UAV, that is used to identify the transmitting UAV. *See* Ex. 1005, [0020], [0027]; Ex. 1006, [0008], [0010], [0013], [0015]-[0017].

157. *Falk* discloses a "beacon" that is "attached to an unmanned aerial vehicle" and "includes an attachment mechanism configured to securely and removably attach the [beacon] to the unmanned aerial vehicle." Ex. 1011, [0010]; Ex. 1012 [0009]. "The beacon includes first indicia identifying an owner or

responsible party, and second indicia identifying a particular unmanned aerial vehicle. At least a portion of the first and second indicia together form a unique identifier associating the owner or responsible party with the unmanned aerial vehicle." Ex. 1011, [0012]; Ex. 1012, [0010]. *Falk* further provides that the beacon "may also include" a "remote communications module configured to participate on at least one wireless communications system as well as transmit and receive information across the at least one wireless communications system to and from a remote operator." Ex. 1011, [0012]; Ex. 1012, [0011]. *Falk* explains that the "indicia" (*e.g.*, the information identifying a particular unmanned aerial vehicle) may be encoded into transmissions to a remote operator along with other data collected by a "sensory package," which a POSITA would have understood to occur via wireless communications. Ex. 1011, [0029]; Ex. 1012, [0024].

158. A POSITA would have been motivated for several reasons to implement *Falk*'s "beacon" as the mechanism used by UAVs to transmit their identification information (e.g., MAC addresses) to *Whitmarsh*'s UAV defense system.

159. First, design incentives and market forces would have motivated a POSITA to implement *Falk*'s beacon alongside *Whitmarsh*'s UAV defense system. A POSITA implementing *Whitmarsh*'s UAV defense system would have understood that its underlying authentication mechanism relies on receiving an identifier from a

UAV. Accordingly, a POSITA would have recognized that to improve the viability and effectiveness of the UAV defense system, they would need to outfit UAVs that are not manufactured with the ability to communicate their identifiers (or other identification information) over wireless resources with some mechanism for performing such communications, such as *Falk*'s beacon. The POSITA would have realized that radar or other traditional methods of detecting larger aircraft would have been less effective at detecting small UAS. There was already an understanding of this challenge at that time as it was clear that the UAS were much smaller than larger aircraft, and FAA had imposed a ban for flying of UAS due to security concerns. Thus a POSITA would have been motivated to find solutions to enable authorized aircraft to fly and identify themselves, such as *Falk*'s beacon, which is capable of wireless communication according to various protocols. Indeed, one of *Falk*'s design goals is to provide a more accessible solution for UAVs to identify themselves in an effort to improve UAV regulation and security, and minimize chance of midsection by radar. Ex. 1011, [0003]-[0009]; Ex. 1012, [0002]-[0008].

160. A POSITA would have also recognized that UAV owners often own multiple UAVs, such that *Falk*'s beacon, which can be removed and attached to multiple UAVs, would have been an attractive mechanism for UAV identification for a considerable customer base.

161. Second, incorporating *Falk's* beacon to transmit UAV identity information is applying a known technique (*Falk*'s beacon for wireless communication of UAV identity information) to improve similar devices (*Whitmarsh*'s UAVs transmitting identity information such as a MAC address) in the same way. The results of the combination would be predictable: UAVs that are configured with attachable (and removable) beacons for transmitting UAV identity information. Indeed, this functionality is entirely consistent with *Falk*'s beacon operation, which is further configured for Wi-Fi-based wireless communication as is done in *Whitmarsh*. Ex. 1011, [0029], [0034] (describing beacon's wireless communication via Wi-Fi networks); Ex. 1012, [0024], [0028] (describing beacon's wireless communication via Wi-Fi networks).

162. Accordingly, a POSITA would have been motivated to combine *Whitmarsh* with *Falk* and would have reasonably expected success in doing so.

B. CLAIM 4

1. The system of claim 1, wherein the identifier transmission system is configured to be reassigned from a first aerial system to a second aerial system.

163. The *Whitmarsh-Falk* combination renders obvious Claim 4. *Falk* discloses a "beacon" that is "attached to an unmanned aerial vehicle" and "includes an attachment mechanism configured to securely and removably attach the [beacon] to the unmanned aerial vehicle." Ex. 1011, [0010]; Ex. 1012 [0009]. "The beacon

includes first indicia identifying an owner or responsible party, and second indicia identifying a particular unmanned aerial vehicle. At least a portion of the first and second indicia together form a unique identifier associating the owner or responsible party with the unmanned aerial vehicle." Ex. 1011, [0012]; Ex. 1012, [0010]. *Falk* further provides that the beacon "may also include" a "remote communications module configured to participate on at least one wireless communications system as well as transmit and receive information across the at least one wireless communications system to and from a remote operator." Ex. 1011, [0012]; Ex. 1012, [0011]. *Falk* explains that the "indicia" (e.g., the information identifying a particular unmanned aerial vehicle) may be encoded into transmissions to a remote operator along with other data collected by a "sensory package," which a POSITA would have understood to occur via wireless communications. Ex. 1011, [0029]; Ex. 1012, [0024].

164. Further, *Falk* explains that "once information is encoded in the indicia 120, including first or second indicia 121, 122, the information cannot be easily changed without detectible modifications to the beacon 100. This type of indicia is particularly useful when it is desirable to associate certain information with the particular owner or the UAV itself." Ex. 1011, [0026]; Ex. 1012, [0022].

165. In the *Whitmarsh-Falk* combination, a POSITA would have understood that *Falk*'s beacon would be incorporated into *Whitmarsh*'s UAV defense system to

act as the "identifier transmission system" that wirelessly transmits a MAC address of an associated UAV, consistent with *Falk*'s description of the beacon as a component that configured to transmit information identifying a UAV to a remote operator via wireless communications.

166. Under this combination, a POSITA would have understood that the beacon ("*the identifier transmission system*") is "*configured to be reassigned from a first aerial system to a second aerial system*." First, the beacon is configured to "securely and removably attach" to a UAV, which a POSITA would have understood to mean it can attach (and reattach) to multiple different UAVs. Ex. 1011, 3:38-41; Ex. 1012 [0009]. Accordingly, a POSITA would have understood that the beacon is able to be physically reassigned from one UAV ("*aerial system*") to another.

167. Second, it would have been obvious to a POSITA that the beacon would be reassigned electronically from one UAV to another. Although *Falk* explains that information associated with indicia of the beacon (*e.g.*, the UAV identity information) is not "easily" changeable, a POSITA would have understood that nothing in *Falk* suggests that the information associated with the indicia cannot be changed or reconfigured. Indeed, *Falk*'s explanation that it is not desirable to change a beacon's indicia when one wants to "associate certain information with the ***particular*** owner or the ***UAV that was used to collect the information***," suggests to

a POSITA that changing the indicia (*e.g.*, UAV identity information) ***would be*** warranted when *Falk*'s beacon is removed from a first UAV and attached to a second UAV. It should also be noted that changing of such indicia or other parameters associated with devices when they are reconfigured or reassigned is a common practice in industries in which POSITA would have been familiar with. Accordingly, it would have been obvious that under the *Whitmarsh-Falk* combination, the "*identifier transmission system*" (implemented as *Falk*'s beacon) would "*configured to be reassigned from a first aerial system to a second aerial system*."

XIII. GROUND 3: WHITMARSH AND GOODRICH RENDERS OBVIOUS CLAIMS 1-3 AND 5-9

A. MOTIVATION TO COMBINE

1. *Whitmarsh* and *Goodrich*

168. *Whitmarsh* discloses a UAV defense system that receives wireless communications from nearby UAVs that include information or signatures unique to the UAVs, such as a MAC address of the UAV, that is used to identify the transmitting UAV. *See* Ex. 1005, [0020], [0027]; Ex. 1006, [0008], [0010], [0013], [0015]-[0017]. Upon determining that the transmitting UAV is unauthorized or hostile, the UAV defense system "develops one or more countermeasures based on the identity and/or position of the detected UAV 14." Ex. 1005, [0017], [0027]; Ex. 1006, [0010], [0016]-[0018]. For example, the countermeasure system may employ an "intercept countermeasure" wherein "the UAV defense system 10 may dispatch

one or more security vehicles 44 and operate it so that it actually collides with the detected UAV 14." Ex. 1005, [0017]-[0018]; Ex. 1006, [0011]. Similarly, *Whitmarsh Provisional* (Ex. 1006), which is incorporated by reference in *Whitmarsh*, discloses an intercept countermeasure performed by the countermeasures system wherein "armed drone systems" are deployed to "intercept (e.g., shoot down) the unauthorized or hostile drone." Ex. 1006, [0011]; Ex. 1005, [0001] (incorporating by reference *Whitmarsh Provisional*).

169. *Goodrich* discloses a counter-UAV system that deploys "an interceptor UAV 110 configured to disable or destroy a target UAV 199." Ex. 1008, [0011], [0014]. Upon detecting a "target UAV," the counter-UAV system tracks the path of the target UAV (e.g., by determining the "azimuth, elevation, and range of the target UAV"), calculates an "intercept track for the interceptor UAV 110," and then "launch[es]" the interceptor UAV 110. *Id*., [0024]. When the interceptor UAV is in range of the target UAV, an "engagement decision" is made to direct the interceptor UAV to either "abort" the intercept track and return to its base or engage the target UAV by executing a "terminal maneuver." *Id*., [0027]-[0030]. The engagement decision may be based on information of the target UAV that was gathered by the intercepting UAV and/or other devices. *Id*., [0025], [0030]. Figure 4 of *Goodrich*, copied below, depicts the process of deploying an intercepting UAV and executing an engagement decision:

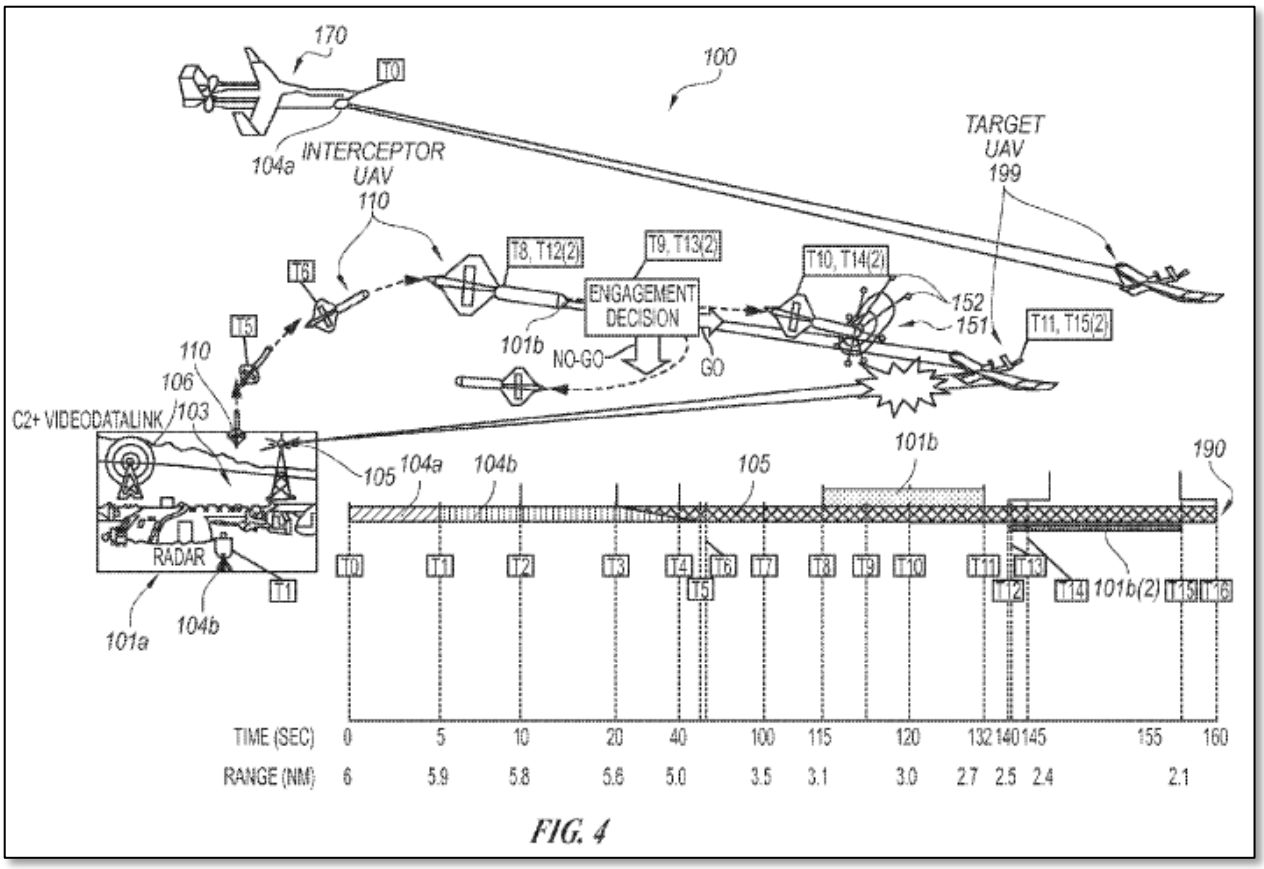

FIG. 4

Ex. 1008, Fig. 4.

170. *Goodrich* explains that a "terminal maneuver" may comprise various techniques for disabling the target UAV, including deploying a "disabling system 150 . . . that make[s] contact with, tangle with, and/or otherwise disable the target UAV." *Id*., [0031].

171. A POSITA would have been motivated for several reasons to implement *Goodrich*'s counter-UAV system, including the intercepting UAV and its disabling system 150, alongside *Whitmarsh*'s UAV defense system to disable any UAV that do not pass *Whitmarsh*'s authentication check.

172. First, a POSITA implementing *Whitmarsh*'s UAV defense system and intercept countermeasure would have recognized that *Whitmarsh* (and *Whitmarsh Provisional*) does not provide all details about implementing the intercept countermeasure. Accordingly, a POSITA would have been motivated to look for other sources providing particular details for launching an intercepting UAV/drone and executing an intercept countermeasure, such as *Goodrich*.

173. Second, market forces and design incentives would have motivated a POSITA to implement *Whitmarsh*'s intercept countermeasure as described by *Goodrich*. As discussed above, *Whitmarsh* explains that its intercept countermeasure may involve "dispatch[ing] one or more security vehicles 44 and operat[ing] it so that it actually collides with the detected UAV 14." Ex. 1005, [0017]-[0018]; Ex. 1006, [0011]. A POSITA would have recognized that by operating the "security vehicle" in such a manner, there is a risk that the security vehicle is destroyed or otherwise damaged in the process, thereby introducing additional cost to *Whitmarsh*'s solution to account for repairing or replacing the damaged security vehicle. Accordingly, a POSITA implementing *Whitmarsh*'s countermeasures system would have been motivated to look for other solutions for deploying an intercepting UAV, such as that provided by *Goodrich*, wherein an intercepting drone can be reused multiple times because it is, for example, capable

of launching a net to disable a target UAV and returning to base when engagement is abandoned.

174. Third, incorporating *Goodrich*'s counter-UAV system and its use of intercepting UAVs with *Whitmarsh*'s UAV defense system is applying a known technique (*Goodrich*'s counter-UAV system and intercepting drone) to improve similar devices (*Whitmarsh*'s UAV defense system and countermeasures system) in the same way. The results of the combination would be predictable: launching intercepting UAVs (as taught by *Goodrich*) to disable detected UAV if the authentication of the detected UAV fails (as taught by *Whitmarsh*).

175. Accordingly, a POSITA would have been motivated to combine *Whitmarsh* and *Goodrich* and would have had a reasonable expectation of success in doing so.

B. CLAIM 1

1. 1[p]: A discrimination system comprising:

176. *See supra*, XI.A.1.

2. 1[a]: an identifier transmission system coupled to an aerial system, wherein the identifier transmission system is configured to broadcast an aerial system identifier signal unique to the aerial system;

177. *See supra*, XI.A.2.

3. 1[b]: an identification receiver;

178. *See supra*, XI.A.3.

4. <u>1[c]: a permission module,</u>

179. *See supra*, XI.A.4

5. <u>1[d]: wherein the identification receiver is configured to receive the aerial system identifier signal and to provide the aerial system identifier signal to the permission module,</u>

180. *See supra*, XI.A.5.

6. <u>1[e]: wherein the permission module is configured to determine that the aerial system associated with the aerial system identifier signal is not permitted to be in an airspace; and</u>

181. *See supra*, XI.A.6.

7. <u>1[f]: a disruption system configured to disrupt an operation of the aerial system, wherein the disruption system is preemptively enabled based the received aerial system identifier signal.</u>

182. For the same reasons discussed above for Ground 1, Limitation 1[f], *Whitmarsh* discloses Limitation 1[f]. *Supra*, XI.A.7.

183. In the alternative, the *Whitmarsh-Goodrich* combination renders obvious this limitation. *Goodrich* discloses a counter-UAV system that deploys "an interceptor UAV 110 configured to disable or destroy a target UAV 199." Ex. 1008, [0011], [0014]. Upon detecting a "target UAV," the counter-UAV system tracks the path of the target UAV (*e.g.*, by determining the "azimuth, elevation, and range of the target UAV"), calculates an "intercept track for the interceptor UAV 110," and then "launch[es]" the interceptor UAV 110. *Id.*, [0024]. When the interceptor UAV is in range of the target UAV, an "engagement decision" is made to direct the

interceptor UAV to either "abort" the intercept track and return to its base or engage the target UAV by executing a "terminal maneuver." *Id.*, [0027]-[0030]. The engagement decision may be based on information of the target UAV that was gathered by the intercepting UAV and/or other devices. *Id.*, [0025], [0030]. Figure 4 of *Goodrich*, copied below, depicts the process of deploying an intercepting UAV and executing an engagement decision:

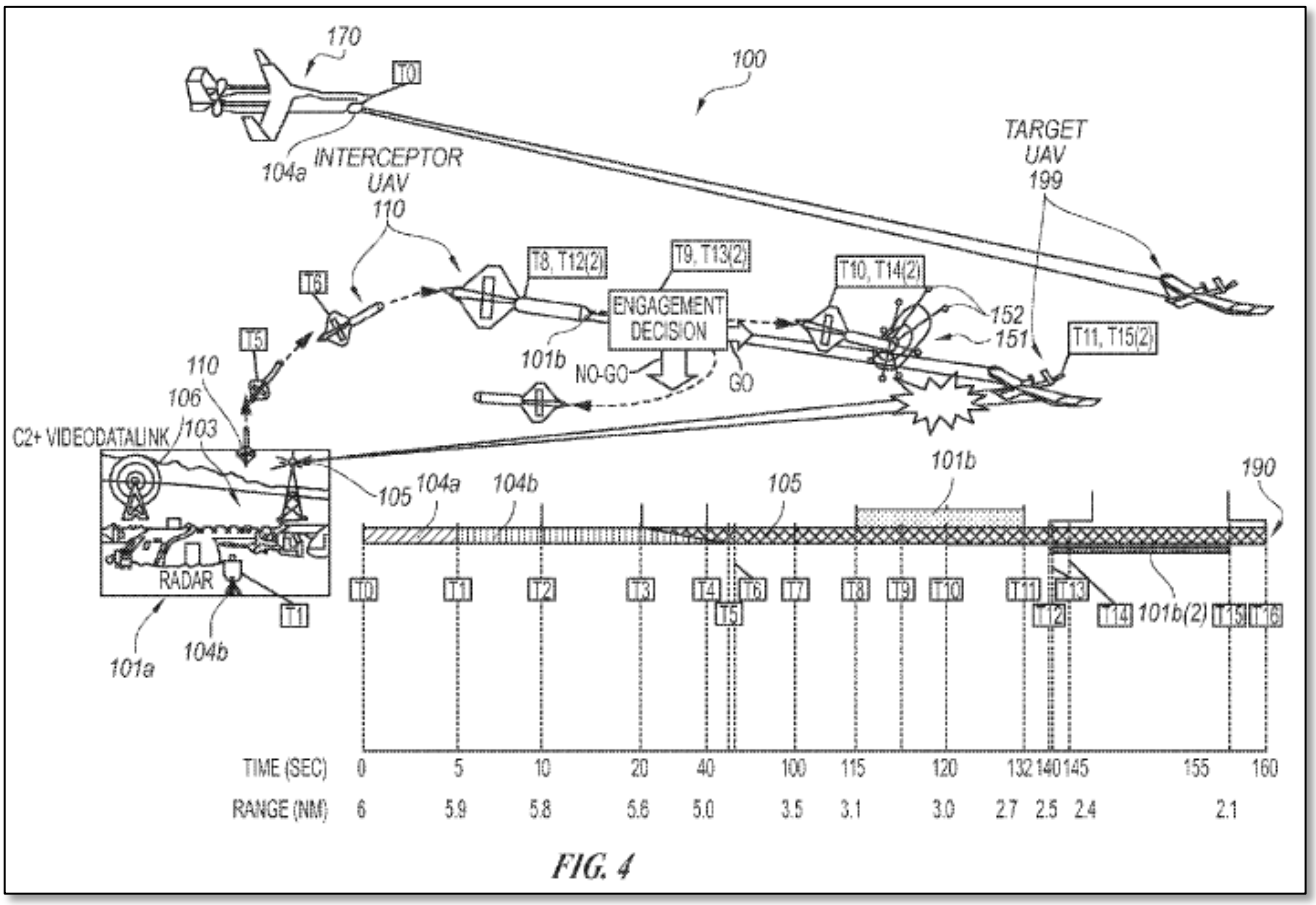

FIG. 4

Ex. 1008, Fig. 4.

184. *Goodrich* explains that a "terminal maneuver" may comprise various techniques for disabling the target UAV, including deploying a "disabling system

150 . . . that make[s] contact with, tangle with, and/or otherwise disable the target UAV." *Id*., [0031]. Examples of the disabling system 150 include a "net gun 153" that "directs a net 151" with "weights 152," as well as "projectile, explosive, and/or energy-based components (e.g., lasers and/or high-powered RF generators)." *Id*., [0037]. Because *Goodrich*'s intercepting UAV is configured to disable a target UAV as described, the intercepting UAV discloses "*a disruption system*."

185. In the combined *Whitmarsh-Goodrich* system, a POSITA would have understood that *Goodrich*'s counter-UAV system, including the intercepting UAV and its disabling system 150, would be implemented alongside *Whitmarsh*'s UAV defense system to disable UAVs that do not pass *Whitmarsh*'s authentication check. In particular, in the combined *Whitmarsh-Goodrich* system, *Goodrich*'s intercepting UAV would be launched when *Whitmarsh*'s UAV defense system first detects a UAV upon receiving the UAV's signature (*e.g.*, MAC address) from the UAV (as described above with reference to Limitations 1[a]-[b], *see supra*, XIII.B.2-3).

186. In the combined *Whitmarsh-Goodrich* system, the process of launching intercepting UAV 110 (as described by *Goodrich*) upon receiving a UAV signature (*e.g.*, MAC address) ("*the received aerial system identifier signal*") from a UAV (as described by *Whitmarsh*) constitutes "*preemptively enabl[ing]*" intercepting UAV 110 "*based [on] the received aerial system identifier signal*," because intercepting

UAV 110 is deployed (*i.e.*, launched) before an "engagement decision" is made to actually disrupt the detected UAV.

187. In the alternative, under the combined *Whitmarsh-Goodrich* system, the process of tracking a detected UAV (as described by *Goodrich*) upon receiving a UAV signature (e.g., MAC address) ("*the received aerial system identifier signal*") from a UAV (as described by *Whitmarsh*) constitutes "*preemptively enabl[ing]*" intercepting UAV 110 "*based [on] the received aerial system identifier signal*," because at the time of tracking, the intercepting UAV 110 is not yet deployed (*i.e.*, launched) to actually engage in disrupting the detected UAV. Only when additional steps occur—launching the intercepting UAV and making an "engagement decision"—does the intercepting UAV 110 disable the detected UAV.

188. Accordingly, the *Whitmarsh-Goodrich* combination renders obvious this limitation.

C. <u>CLAIM 2</u>

189. *See supra*, XI.B.

D. <u>CLAIM 3</u>

190. *See supra*, XI.C.

E. CLAIM 5

1. The system of claim 1, wherein when the disruption system is enabled the aerial system is caused to be removed from the airspace.

191. As discussed above with reference to Ground 1, Claim 5, *Whitmarsh* discloses Claim 5 when its intercept countermeasure is deployed. *See supra*, XI.D. Thus, Claim 5 is disclosed for at least the same reasons.

192. In the alternative, when the "*disruption system*" is rendered obvious by the *Whitmarsh-Goodrich* combination (as discussed above with reference to Limitation 1[f], *supra* XIII.B.7), Claim 5 is taught by *Goodrich*'s disclosure of executing a terminal maneuver to disable a target UAV. As discussed above with reference to Limitation 1[f], *Goodrich* describes that after intercepting UAV 110 is launched, an "engagement decision" is made to direct the intercepting UAV to perform a "terminal maneuver," which includes deploying a "disabling system 150 . . . that make[s] contact with, tangle with, and/or otherwise disable the target UAV." *Supra*, XIII.B.7; Ex. 1008, [0031]. Examples of the disabling system 150 include a "net gun 153" that "directs a net 151" with "weights 152," as well as "projectile, explosive, and/or energy-based components (e.g., lasers and/or high-powered RF generators)." *Id.*, [0037]. When implemented as a net gun, the disabling system causes the net to "tangle with or otherwise become caught in the propeller(s), fuselage, lifting surfaces and/or other elements of the target UAV 199,

so as to interfere with and disable the controlled flight of the target UAV 199." *Id.*, [0032]. A POSITA would have understood that disabling the controlled flight of a target UAV would cause the target UAV to be "removed from the airspace," *e.g.*, as a result of the UAV falling to the ground due to being unable to fly.

193. Accordingly, when *Goodrich*'s intercepting UAV is configured by an engagement decision to perform a terminal maneuver, the intercepting UAV ("*the disruption system*") is enabled to remove a target UAV (*e.g.*, an unauthenticated UAV as taught by *Whitmarsh*) from an airspace. Thus, the *Whitmarsh-Goodrich* combination renders Claim 5 obvious.

F. CLAIM 6

1. The system of claim 1, wherein the disruption system comprises of a projectile launcher and an interdiction module.

194. As discussed above with reference to Ground 1, Claim 6, *Whitmarsh* discloses Claim 6. *See supra*, XI.E. Thus, Claim 6 is disclosed for at least the same reasons.

195. In the alternative, when the "*disruption system*" is rendered obvious by the *Whitmarsh-Goodrich* combination (as discussed above with reference to Limitation 1[f] and Claim 5, *supra* XIII.B.7 and XIII.E), Claim 6 is taught by *Goodrich*'s disclosure of interceptor UAV 110 including a disabling system such as a "net gun 153" ("*a projectile launcher*") that launches a "net 151." ("*an interdiction module*"). *See supra*, XIII.B.7 and XIII.E; Ex. 1008, [0037]. This understanding of

Goodrich's net 151 as an "*interdiction module*" is consistent with the '199 Patent, which identifies "a net that entangles the aerial system motive mechanism" as "a first variation" of "the interdiction module." *See* Ex. 1001, 11:40-41. Accordingly, *Goodrich* discloses Claim 6, and the *Whitmarsh-Goodrich* combination renders Claim 6 obvious.

G. CLAIM 7

1. The system of claim 1, wherein the disruption system comprises of an interceptor drone coupled with an interdiction module.

196. As discussed above with reference to Ground 1, Claim 7, *Whitmarsh* discloses, or at least renders obvious, Claim 7. *See supra*, XI.F. Thus, Claim 7 is disclosed, or at least rendered obvious, for at least the same reasons.

197. In the alternative, when the "*disruption system*" is rendered obvious by the *Whitmarsh-Goodrich* combination (as discussed above with reference to Limitation 1[f] and Claim 5, *supra* XIII.B.7 and XIII.E), Claim 7 is taught by *Goodrich*'s "interceptor drone" that is equipped with ("*coupled t*o") a "net gun 153" that launches a "net 151" ("*an interdiction module*"), as discussed above with reference to Limitation 1[f] and Claims 5 and 6. *See supra*, XIII.B.7 and XIII.E-F; Ex. 1008, [0037]. Accordingly, *Goodrich* discloses Claim 7 for the same reasons, and the *Whitmarsh-Goodrich* combination renders Claim 7 obvious.

H. CLAIM 8

1. The system of claim 1, further comprising a control system for controlling the disruption system.

198. As discussed above with reference to Ground 1, Claim 8, *Whitmarsh* discloses, or at least renders obvious, Claim 8. *See supra*, XI.G. Thus, Claim 8 is disclosed, or at least rendered obvious, for at least the same reasons.

199. In the alternative, when the "*disruption system*" is rendered obvious by the *Whitmarsh-Goodrich* combination (as discussed above with reference to Limitation 1[f], *supra* XIII.7), Claim 8 is taught by *Goodrich*'s guidance system. *Goodrich* describes that its interceptor UAV 110 ("*the disruption system*") includes a "guidance system 130 (e.g., computer-based or controlled)" that "control[s] and guide[s] the interceptor UAV 110 toward its target" ("*a control system for controlling the disruption system*"). Ex. 1008, [0014], [0019]. Accordingly, *Goodrich* discloses Claim 8, and the *Whitmarsh-Goodrich* combination renders Claim 8 obvious.

I. CLAIM 9

200. *See supra*, XI.H.

XIV. GROUND 4: WHITMARSH, GOODRICH, AND FALK RENDER OBVIOUS CLAIM 4

A. MOTIVATION TO COMBINE

1. Whitmarsh and Goodrich

201. *See supra*, XIII.A.1.

2. Whitmarsh with Falk

202. *See supra*, XII.A.1.

B. CLAIM 4

203. *See supra*, XII.B.

XV. GROUND 5: VIGGIANO AND GOODRICH RENDER OBVIOUS CLAIMS 1 AND 5-9

A. MOTIVATION TO COMBINE

1. Viggiano and Goodrich

204. *Viggiano* discloses an "authentication apparatus" that "employs an authentication challenge-response methodology and encryption techniques to authenticate the identity of an ADS-B [Automatic Dependent Surveillance-Broadcast] equipped aircraft, vehicle or station." Ex. 1007, [0012]. The employed authentication challenge-response methodology generally comprises issuing, by an "Authenticator," an authentication challenge to the ADS-B equipped aircraft/vehicle. *Id*., [0012]-[0013]. Based on information included in the authentication challenge, as well as other information unique to the ADS-B equipped aircraft/vehicle, the ADS-B equipped aircraft/vehicle generates and returns an "authentication response" to the authenticator. *Id*., [0015]. The authenticator then compares information included in the authentication response with an expected response—if the values match, the identity of the ADS-B equipped aircraft/vehicle is authenticated. *Id*. If "two or more consecutive authentication response

comparisons" have failed, however, then additional action is taken, including notifying "a responsible higher command authority of the authentication failures, so that the responsible higher command authority can respond appropriately" or issuing "an alert that is displayed to other ADS-B equipped aircraft, vehicles, vessels or stations." *Id*.

205. *Goodrich* discloses a counter-UAV system that deploys "an interceptor UAV 110 configured to disable or destroy a target UAV 199." Ex. 1008, [0011], [0014]. Upon detecting a "target UAV," the counter-UAV system tracks the path of the target UAV (e.g., by determining the "azimuth, elevation, and range of the target UAV"), calculates an "intercept track for the interceptor UAV 110," and then "launch[es]" the interceptor UAV 110. Id., [0024]. When the interceptor UAV is in range of the target UAV, an "engagement decision" is made to direct the interceptor UAV to either "abort" the intercept track and return to its base or engage the target UAV by executing a "terminal maneuver." *Id*., [0027]-[0030]. The engagement decision may be based on information of the target UAV that was gathered by the intercepting UAV and/or other devices. *Id*., [0025], [0030]. Figure 4 of *Goodrich*, copied below, depicts the process of deploying an intercepting UAV and executing an engagement decision:

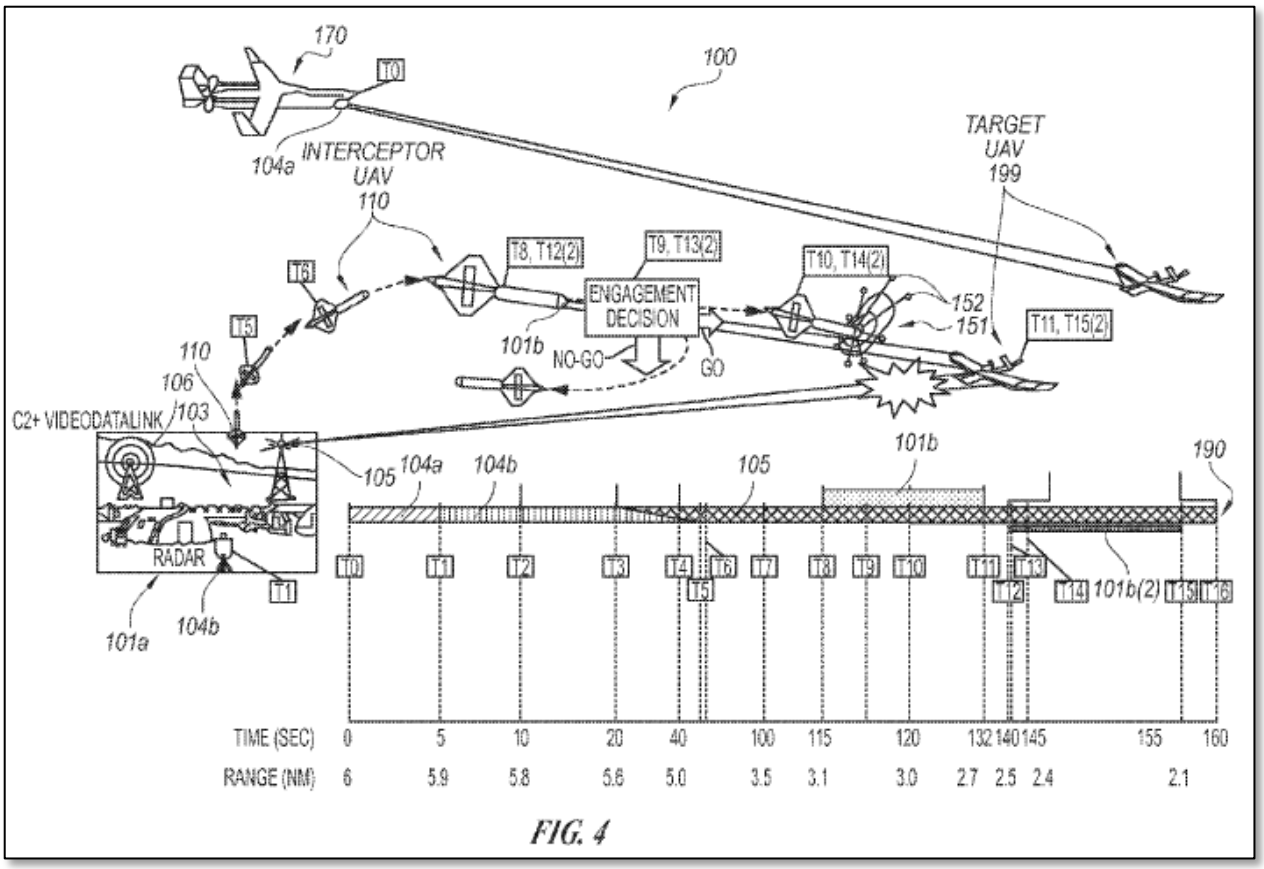

FIG. 4

Ex. 1008, Fig. 4.

206. *Goodrich* explains that a "terminal maneuver" may comprise various techniques for disabling the target UAV, including deploying a "disabling system 150 . . . that make[s] contact with, tangle with, and/or otherwise disable the target UAV." *Id*., [0031].

207. A POSITA would have been motivated for several reasons to implement *Goodrich*'s counter-UAV system, including the intercepting UAV and its disabling system 150, alongside *Viggiano*'s authentication apparatus to disable any ADS-B equipped aircraft/vehicle that do not pass *Viggiano*'s authentication

check. Further, although *Viggiano* does not provide examples of an "ADS-B equipped aircraft, vehicle or station," a POSITA would have understood that a UAV, such as a "target UAV" as taught by *Goodrich*, could be one such aircraft/vehicle, as it was known in the art that UAVs (also referred to as UASs or drones) could be equipped with ADS-B transceivers. *See, e.g.*, Ex. 1009, 2:66-3:2, 6:20-29; Ex. 1010, [0013], Ex. 1011, [0029], [0046] (describing compliance with ADS-B standard); Ex. 1012, [0024], [0027] (describing beacon's use of wireless communications networks operating on "frequencies from 500-980 MHz," where the 978 MHz UAT frequency band is a well-known ADS-B resource (*see* Ex. 1009, 6:23-24 ("Designated ADS-B frequencies, e.g., 978 MHz (Universal Access Transceiver, or UAT)"), Ex. 1017 (describing availability of "978 UAT" band for ADS-B Out transmissions)).

208. First, *Viggiano* provides an express motivation to implement *Goodrich*'s counter-UAV system for disabling aircraft. *Viggiano* explains that a goal of its disclosed invention is to develop a "method of authenticating an aircraft's identity, thereby making it more difficult for unauthorized third parties to enter a given air traffic control region by broadcasting false identification data for an aircraft." Ex. 1007, [0004]. However, *Viggiano* only teaches the identification of authorized or unauthorized UAVs—it does not describe the prevention or removal of unauthorized UAVs upon their detection. *See generally*, Ex. 1007. Thus, a POSITA would have been motivated to look for other solutions for protecting a

given air traffic control region against unauthorized aircraft and would have understood that *Goodrich* offers one such solution.

209. Second, design incentives and market forces would have motivated a POSITA to incorporate *Goodrich*'s counter-UAV system alongside *Viggiano*'s authentication apparatus. At the time of the alleged invention, operators of an airspace, such as an "air traffic control region" disclosed by *Viggiano*, would have been motivated to protect the airspace and its occupants (e.g., personnel and equipment) from exposure to unauthorized aircraft (e.g., certain ADS-B equipped UAVs or drones), which could improperly survey or otherwise damage the airspace's occupants. Accordingly, in addition to identifying such unauthorized aircraft (as taught by *Viggiano*), a POSITA would have understood that having a system for disabling such unauthorized aircraft (as taught by *Goodrich*) would improve the security and overall viability of an airspace. Indeed, this strategy is well-known in security and military settings, and would have been an obvious technique to supplement *Viggiano*'s authentication apparatus.

210. Third, incorporating *Goodrich*'s counter-UAV system and its use of intercepting UAVs with *Viggiano*'s authentication apparatus is applying a known technique (*Goodrich*'s counter-UAV system) to improve similar devices (*Viggiano*'s authentication apparatus) in the same way. The results of the combination would be predictable: launching intercepting UAVs (as taught by

Goodrich) to disable detected ADS-B equipped aircraft (e.g., an ADS-B equipped UAV or drone) if the authentication of the detected ADS-B equipped aircraft fails (as taught by *Viggiano*).

211. Accordingly, a POSITA would have been motivated to combine *Viggiano* and *Goodrich* and would have had a reasonable expectation of success in doing so.

B. CLAIM 1

1. 1[p]: A discrimination system comprising:

212. To the extent the preamble is limiting, *Viggiano* discloses the preamble through its description of an authentication apparatus. *Viggiano* describes an "authentication apparatus" that "employs an authentication challenge-response methodology and encryption techniques to authenticate the identity of an ADS-B equipped aircraft." Ex. 1007, [0012]. The employed authentication challenge-response methodology generally comprises issuing, by an "Authenticator," an authentication challenge to the ADS-B equipped aircraft. *Id*., [0012]-[0013] (explaining that the "Authenticator" may be another "ADS-B equipped aircraft, vehicle, vessel or ground station"). Based on information included in the authentication challenge, as well as other information unique to the ADS-B equipped aircraft, the ADS-B equipped aircraft generates and returns an "authentication response" to the authenticator. *Id*., [0015]. The authenticator then processes the

authentication response to determine if "the identity of the ADS-B transmitter" (*i.e.*, the ADS-B equipped aircraft) is "authenticated." *Id*. If this authentication process fails, the authenticator notifies "responsible higher command authority" or "other ADS-B equipped aircraft, vehicles, vessels or stations," to take further action. *Id*.

213. Accordingly, *Viggiano*'s authentication apparatus, which discriminates between authorized and unauthorized aircraft, discloses a "*discrimination system*."

2. 1[a]: an identifier transmission system coupled to an aerial system, wherein the identifier transmission system is configured to broadcast an aerial system identifier signal unique to the aerial system

214. *Viggiano* teaches Limitation 1[a] at least through its disclosure of an ADS-B transmitting system. *Viggiano* describes an "ADS-B equipped aircraft" "transiting through an airspace [that] is broadcasting its specific position data 24 and a unique ID 22, for example, a Mode S address." Ex. 1007, [0012]; see also id., [0024] (referring to "ADS-B transmitter ID, 22 and 32"). The aircraft ("aerial system") broadcasts the unique ID via an "ADS-B transmitting system." Id., [0013], Fig. 1 (depicting "ADS-B transmitting system 20").

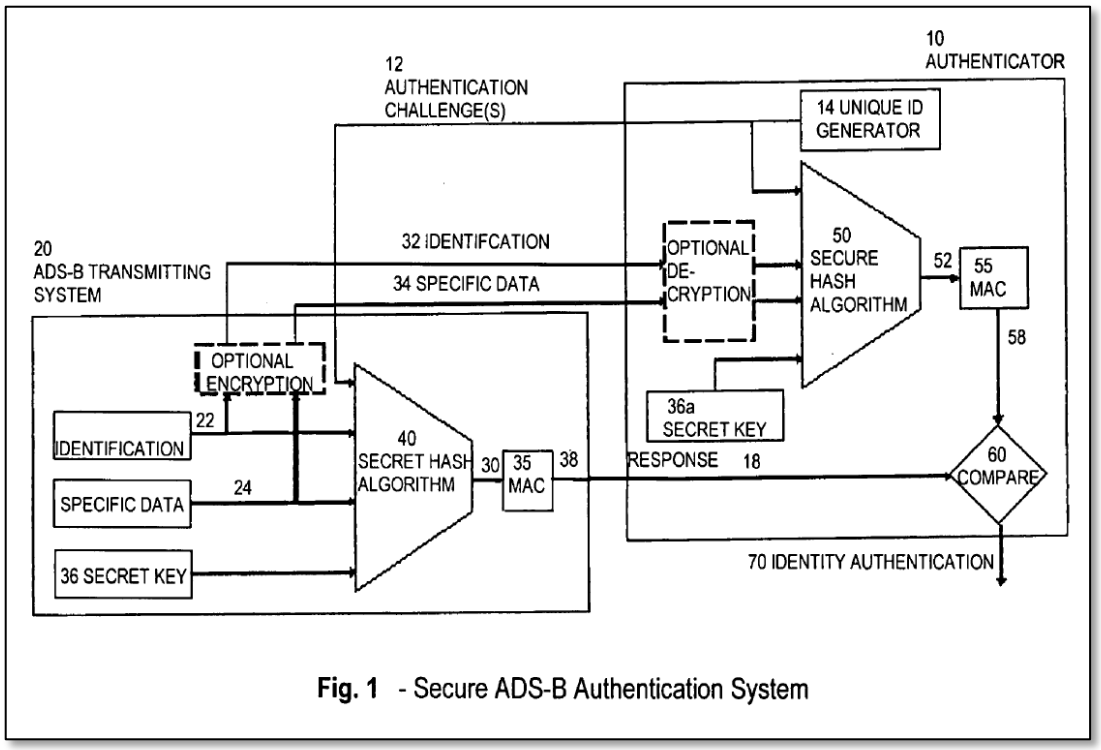

Fig. 1 - Secure ADS-B Authentication System

Ex. 1007, Fig. 1.

215. The unique ID, along with other information, such as a Message Authentication Code (MAC) 38, specific data 24 (which may include "such data as position, velocity, and intent" of an aircraft), are transmitted in an "authentication response 18," which "is broadcast as part of the Mode S ADS-B message." Id., [0013], [0016] ("In a preferred embodiment, . . . the authentication response 18 is broadcast as part of the Mode S ADS-B message, using unused and/or reserved bits in the Mode S ADS-B message."). *Viggiano* explains that the MAC 38 included in the authentication response is produced based in part on a unique identifier received in an authentication challenge from a ground-based Authenticator, such that a POSITA would have understood that the MAC 38 is itself unique. *Id.*, [0012]-

[0013]. The MAC 38 is then compared against an "Authenticator-generated MAC 58" to authenticate the identity of the transmitting ADS-B transmitting system. *Id*., [0015]. The unique identifier received in the authentication challenge "can be random values, [but] it need only be unique so that attackers cannot 'learn' a valid response by observing the challenges 12 of the authenticator and the corresponding responses 38." *Id*., [0013].

216. Accordingly, the authentication response is an "aerial system identifier signal," because it is a signal broadcast by the ADS-B transmission system that includes a unique ID 22 associated with the aircraft. Further, the authentication response is "unique to the aerial system" because it includes both the unique ID 22—which is unique to the transmitting aircraft—and the MAC 38—which is generated based on data unique to the transmitting system (e.g., the unique identifier received in an authentication challenge) in a manner that is designed to prevent illicit duplication. *See id*., [0012]-[0013].

217. Finally, *Viggiano*'s "ADS-B transmitting system" is "coupled" to its associated aircraft. As noted above, *Viggiano*'s system and methods are employed to "authenticate the identity of an ADS-B equipped aircraft, vehicle, or station." Ex. 1007, [0012]. A POSITA would have understood that the ADS-B transmitting system is the component with which the "ADS-B equipped aircraft" is equipped, because ADS-B transmitters were well-known components added to aircrafts as part

of aviation surveillance solutions. Accordingly, a POSITA would have understood that the ADS-B transmitting system ("identifier transmission system") is coupled to the ADS-B equipped aircraft ("aerial system").

218. Accordingly, *Viggiano*'s ADS-B transmission system ("an identifier transmission system coupled to an aerial system"), which broadcasts an authentication response that comprises a unique ID and a MAC unique to the ADS-B transmission system ("is configured to broadcast an aerial system identifier signal unique to the aerial system") teaches Limitation 1[a].

3. <u>1[b]: an identification receiver;</u>

219. *Viggiano* discloses Limiation 1[b] at least through its disclosure of an Authenticator (e.g., "Authenticator 10"). As discussed above with reference to Limitations 1[p] and 1[a], *Viggiano*'s authentication apparatus comprises an "Authenticator" that issues an authentication challenge to ADS-B equipped aircraft and receives an authentication response from the ADS-B transmitting system of the ADS-B equipped aircraft. *Supra*, XV.B.1-2; Ex. 1007, [0012]-[0015]. And as discussed above with reference to Limitation 1[a], the authentication response comprises, among other information, a "unique ID" of the ADS-B transmitting system. *Supra*, XV.B.2; Ex. 1007, [0013]. Accordingly, *Viggiano*'s Authenticator, which receives a unique ID of an ADS-B transmitting system of an ADS-B equipped aircraft, discloses an "identification receiver."

4. <u>1[c]: a permission module,</u>

220. I discuss in Limitation 1[e] below why *Whitmarsh* discloses, or at least renders obvious, Limitation 1[c]. *See* XV.B.6.

5. <u>1[d]: wherein the identification receiver is configured to receive the aerial system identifier signal and to provide the aerial system identifier signal to the permission module,</u>

221. As discussed above with reference to Limitations 1[a] and 1[b], *Viggiano*'s authenticator ("*the identification receiver*") is configured to receive the authentication response ("*the aerial system identifier signal*") from the ADS-B transmitting system. *Supra*, XV.B.2-3; Ex. 1007, [0015] (describing authenticator 10's reception of authentication response 18). As depicted in Figure 1, annotated below, authenticator 10 passes authentication response 18 ("provide[s] the aerial system identifier signal") to comparator 60 ("to the permission module"):

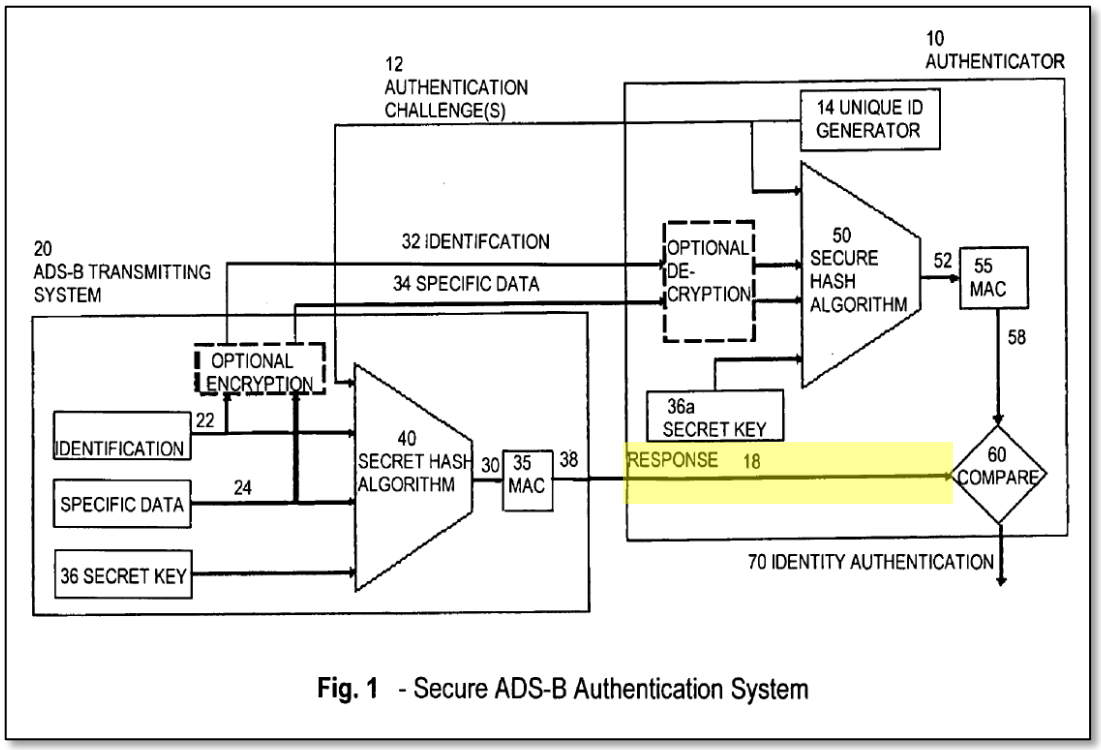

Fig. 1 - Secure ADS-B Authentication System

Ex. 1007, Fig. 1 (annotated).

222. Accordingly, *Viggiano* discloses this limitation.

6. <u>1[e]: wherein the identification receiver is configured to receive the aerial system identifier signal and to provide the aerial system identifier signal to the permission module,</u>

223. The *Viggiano-Goodrich* combination discloses this limitation, regardless of whether the "*permission module*" term is subject to §112(f).

a) Function:

224. *Viggiano* discloses the claimed function "determin[ing] that the aerial system associated with the aerial system identifier signal is not permitted to be in an airspace." As discussed above with reference to Limitation 1[p], *Viggiano*'s authenticator is configured to process the authentication response received from the

ADS-B transmitting system to authenticate the ADS-B transmitter's identity. *Supra*, XV.B.1; Ex. 1007, [0015]. This processing is performed by "comparator 60" included in the authenticator. In particular, comparator 60 is configured to compare MAC 38, which is received in the authentication response sent by the ADS-B transmitting system (*see supra*, XV.B.2, Ex. 1007, [0013]-[0014]), with an "Authenticator-generated MAC 58;" if these values match, "the identity of the ADS-B transmitter is authenticated" (Ex. 1007, [0015]). If "two or more consecutive authentication response comparisons" are failed, however, then "authenticator 10 notifies a responsible higher command authority of the authentication failures, so that the responsible higher command authority can respond appropriately." *Id*. Alternatively, authenticator 10 may "issue[] an alert that is displayed to other ADS-B equipped aircraft, vehicles, vessels or stations." *Id*.

225. *Viggiano* explains that authenticating an aircraft's identity in this manner addresses its goal of "making it more difficult for unauthorized third parties to enter a given air traffic control region by broadcasting false identification data for an aircraft." Ex. 1007, [0004]-[0005]. Thus, when comparator 60 authenticates an aircraft's identity through the method just described, it also determines whether the aircraft permitted to enter ("*to be in*") a given air traffic region ("an airspace"), where two consecutive authentication failures indicate that the aircraft does **not** have

permission to be in the air traffic region. Accordingly, *Viggiano* discloses the claimed determining functionality.

b) Structure:

226. *Viggiano* discloses the claimed "*permission module*" regardless of whether that term is subject to §112(f). As discussed above, *Viggiano*'s "comparator" is the component that compares received MAC 38 with Authenticator-generated MAC 58, thereby determining an aircraft's identity and permission to enter a given air traffic region. *See supra*, XV.B.6.(a). It "compares" two values—a MAC 38 and an Authenticator-generated MAC 58—to determine whether they match. *Viggiano* explains that MAC 38 may be "the last 8-bits of [a] computed hash value 30," which a POSITA would have understood to mean that the MAC 38 (and, by extension, the Authenticator-generated MAC 58) is a digital signal. Ex. 1007, [0018]. Accordingly, a POSITA would have understood that *Viggiano*'s comparator is, or at least renders obvious, a "computing system" capable of comparing digital signals, which is a well-known functionality of such a component. Further, *Viggiano* provides that the comparator's functionality may be performed by "identity authentication processing including comparison processing for comparing the independently generated authentication codes," which a POSITA would have understood to mean that the "comparator" may be a "processor" (*i.e.*, "computing system") for performing the comparing function. Ex. 1007, [0011].

227. If "*permission module*" is subject to §112(f), *Viggiano*'s comparator also discloses, or at least renders obvious, the corresponding structure identified above. *See supra*, VIII.A. As discussed above, the comparator compares a received MAC 38 with an Authenticator-generated MAC 58 to determine if the two values match, thereby indicating whether the transmitting aircraft is authenticated and permitted to be in an airspace. *See supra*, XV.B.6.(a). And as discussed above with reference to Limitation 1[a], the MAC 38 is generated based on data unique to the transmitting system (*e.g.*, the unique identifier received in an authentication challenge), such that a POSITA would have understood that the MAC 38 is an "aerial system parameter." *Supra*, XV.B.2; Ex. 1007, [0012]-[0013]. The Authenticator-generated MAC 58 is generated by *Viggiano*'s authenticator and is the value that the authenticator expects MAC 38 to be if the transmitting aircraft is an authentic (and, therefore, permitted), such that a POSITA would have understood Authenticator-generated MAC 58 to be a "permission of the airspace." Ex. 1007, [0015]. Thus, *Viggiano*'s comparator discloses, or at least renders obvious, a computing system programmed to compare an aerial system parameter, such as an identifier, with the permissions for the airspace.

7. 1[f]: a disruption system configured to disrupt an operation of the aerial system, wherein the disruption system is preemptively enabled based the received aerial system identifier signal; and

228. The *Viggiano-Goodrich* combination renders obvious Limitation 1[f]. *Goodrich* discloses a counter-UAV system that deploys "an interceptor UAV 110 configured to disable or destroy a target UAV 199." Ex. 1008, [0011], [0014]. Upon detecting a "target UAV," the counter-UAV system tracks the path of the target UAV (e.g., by determining the "azimuth, elevation, and range of the target UAV"), calculates an "intercept track for the interceptor UAV 110," and then "launch[es]" the interceptor UAV 110. *Id*., [0024]. When the interceptor UAV is in range of the target UAV, an "engagement decision" is made to direct the interceptor UAV to either "abort" the intercept track and return to its base or engage the target UAV by executing a "terminal maneuver." *Id*., [0027]-[0030]. The engagement decision may be based on information of the target UAV that was gathered by the intercepting UAV and/or other devices. *Id*., [0025], [0030]. Figure 4 of *Goodrich*, copied below, depicts the process of deploying an intercepting UAV and executing an engagement decision:

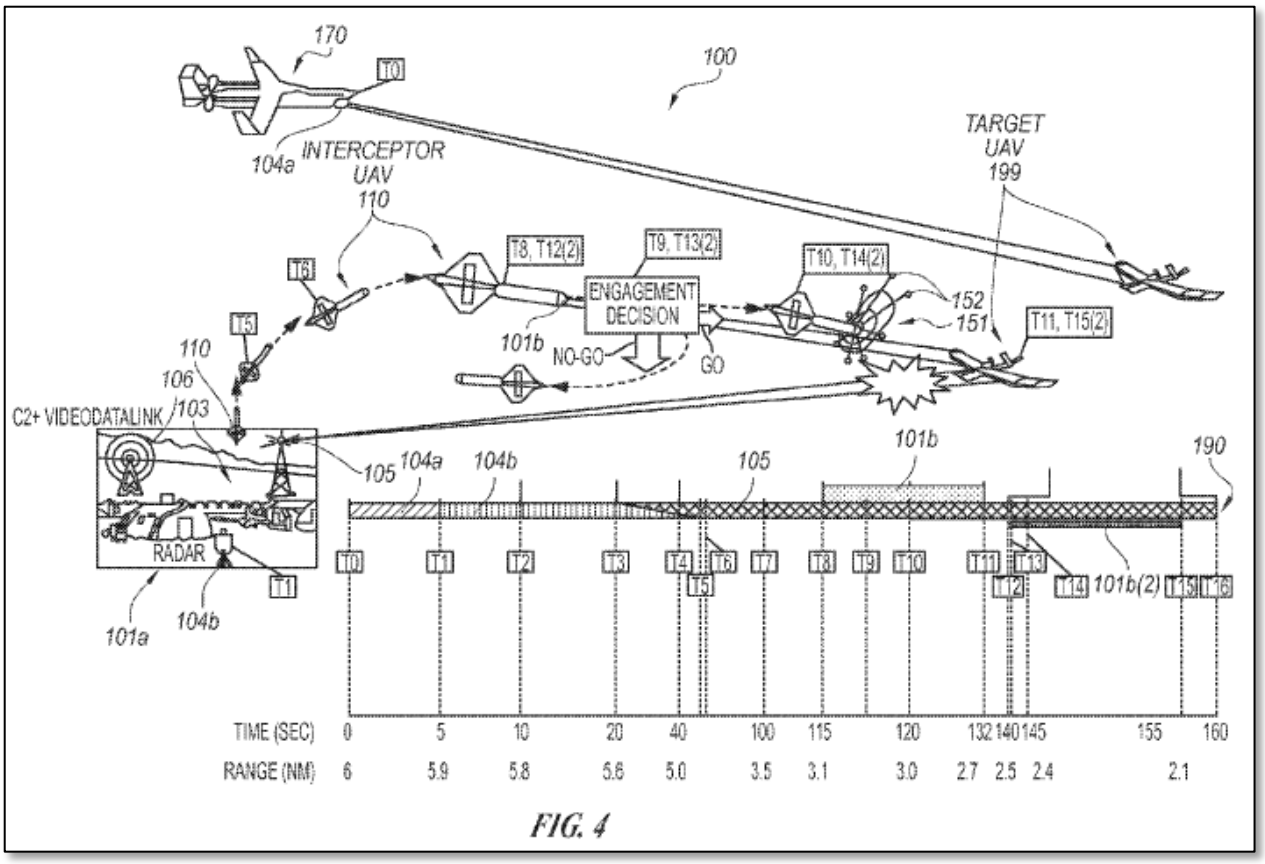

FIG. 4

Ex. 1008, Fig. 4.

229. *Goodrich* explains that a "terminal maneuver" may comprise various techniques for disabling the target UAV, including deploying a "disabling system 150 . . . that make[s] contact with, tangle with, and/or otherwise disable the target UAV." *Id*., [0031]. Examples of the disabling system 150 include a "net gun 153" that "directs a net 151" with "weights 152," as well as "projectile, explosive, and/or energy-based components (e.g., lasers and/or high-powered RF generators)." *Id*., [0037]. Because *Goodrich*'s intercepting UAV is configured to disable a target UAV as described, the intercepting UAV discloses "a disruption system."

230. In the combined *Viggiano-Goodrich* system, a POSITA would have understood that *Goodrich*'s counter-UAV system, including the intercepting UAV and its disabling system 150, would be implemented alongside *Viggiano*'s authentication apparatus to disable any ADS-B equipped aircraft that do not pass *Viggiano*'s authentication check. In particular, in the combined *Viggiano-Goodrich* system, *Goodrich*'s intercepting UAV would be launched when *Viggiano*'s authenticator first detects an ADS-B equipped aircraft upon receiving an authentication response from the aircraft (as described above with reference to Limitations 1[a]-[b], *see supra*, XV.B.2-3).

231. As discussed above with reference to Limitation 1[e], two or more consecutive failures of *Viggiano*'s authentication check results in additional action taken by the authenticator (e.g., notifying higher command authority and/or nearby vehicles, see Ex. 1007, [0015]); in the combined *Viggiano-Goodrich* system, a POSITA would have understood that two or more consecutive failures of *Viggiano*'s authentication check—which indicate that the detected ADS-B equipped aircraft is not authenticated—would result in *Goodrich*'s intercepting UAV ("disruption system") deploying its disabling system to disrupt the unauthenticated ADS-B equipped aircraft ("configured to disrupt an operation of the aerial system"). This is consistent with *Goodrich*'s description of first launching the intercepting UAV upon initial detection of the target UAV and waiting for additional analysis before

determining an "engagement decision" for the intercepting UAV. Ex. 1008, [0025]-[0030].

232. In the combined *Viggiano*-*Goodrich* system, the process of launching intercepting UAV 110 (as described by *Goodrich*) upon receiving an authentication response ("*the received aerial system identifier signal*") from an ADS-B equipped aircraft (as described by *Viggiano*) constitutes "*preemptively enabl[ing]*" intercepting UAV 110 "*based [on] the received aerial system identifier signal*," because intercepting UAV 110 is deployed (i.e., launched) prior to being enabled to actually engage in disrupting the ADS-B equipped aircraft. Only when the additional step of making an "engagement decision" occurs does the intercepting UAV disrupt the detected ADS-B equipped aircraft.

233. In the alternative, under the combined *Viggiano*-*Goodrich* system, the process of tracking a detected UAV (as described by *Goodrich*) upon receiving an authentication response ("the received aerial system identifier signal") from an ADS-B equipped aircraft (as described by *Viggiano*) constitutes "preemptively enabl[ing]" intercepting UAV 110 "based [on] the received aerial system identifier signal," because at the time of tracking, the intercepting UAV 110 is not yet deployed (i.e., launched), let alone enabled, to actually engage in disrupting the ADS-B equipped aircraft. Only when additional steps occur—launching the intercepting UAV and determining two consecutive authentication failures by the

detected ADS-B equipped aircraft—does an "engagement decision" get made to enable the intercepting UAV 110 to disable the ADS-B.

234. Accordingly, the *Viggiano*-*Goodrich* combination renders obvious this limitation.

C. CLAIM 3

1. The system of claim 1, wherein the identification receiver is a mobile device.

235. As discussed above with reference to Limitation 1[b], *Viggiano*'s Authenticator, which receives a unique ID of an ADS-B transmitting system of an ADS-B equipped aircraft, discloses an "*identification receiver*." *Supra*, XV.B.3. And as discussed above with reference to Limitation 1[p], the "Authenticator" may be another "ADS-B equipped aircraft, vehicle, vessel or ground station." *Supra*, XV.B.1. When implemented as an "ADS-B equipped aircraft, vehicle, [or] vessel," *Viggiano*'s Authenticator ("*identification receiver*") is a "*mobile device*," and therefore discloses Claim 3.

D. CLAIM 5

1. The system of claim 1, wherein when the disruption system is enabled the aerial system is caused to be removed from the airspace.

236. The *Viggiano*-*Goodrich* combination discloses this claim at least through *Goodrich*'s disclosure of executing a terminal maneuver to disable a target UAV. As discussed above with reference to Limitation 1[f], *Goodrich* describes that

after intercepting UAV 110 is launched, an "engagement decision" is made to direct the intercepting UAV to perform a "terminal maneuver," which includes deploying a "disabling system 150 . . . that make[s] contact with, tangle with, and/or otherwise disable the target UAV." Supra, XV.B.7; Ex. 1008, [0031]. Examples of the disabling system 150 include a "net gun 153" that "directs a net 151" with "weights 152," as well as "projectile, explosive, and/or energy-based components (e.g., lasers and/or high-powered RF generators)." *Id*., [0037]. When implemented as a net gun, the disabling system causes the net to "tangle with or otherwise become caught in the propeller(s), fuselage, lifting surfaces and/or other elements of the target UAV 199, so as to interfere with and disable the controlled flight of the target UAV 199." *Id*., [0032]. A POSITA would have understood that disabling the controlled flight of a target UAV would cause the target UAV to be "removed from the airspace," e.g., as a result of the UAV failing to the ground due to being unable to fly.

237. Accordingly, when *Goodrich*'s intercepting UAV is configured by an engagement decision to perform a terminal maneuver, the intercepting UAV ("the disruption system") is enabled to remove a target UAV (e.g., an ADS-B equipped aircraft as taught by *Viggiano*) from an airspace. Thus, the *Viggiano*-*Goodrich* combination renders this limitation obvious.

E. CLAIM 6

1. The system of claim 1, wherein the disruption system comprises of a projectile launcher and an interdiction module.

238. As discussed above with reference to Limitation 1[f] and Claim 5, *Goodrich*'s interceptor UAV 110 includes disabling system such as a "net gun 153" ("a projectile launcher") that launches a "net 151" ("an interdiction module"). See *supra*, XV.B.7, XV.D; Ex. 1008, [0037]. This understanding of *Goodrich*'s net 151 as an "interdiction module" is consistent with the '199 Patent, which identifies "a net that entangles the aerial system motive mechanism" as "a first variation" of "the interdiction module." *See* Ex. 1001, 11:40-41. Accordingly, *Goodrich* discloses Claim 6.

F. CLAIM 7

1. The system of claim 1, wherein the disruption system comprises of an interceptor drone coupled with an interdiction module.

239. As discussed above with reference to Limitation 1[f] and Claims 5 and 6, *Goodrich*'s interceptor UAV 110 ("disruption system") is an "interceptor drone" that is equipped with ("coupled to") a "net gun 153" that launches a "net 151" ("an interdiction module"). See supra, XV.B.7, XV.D, XV.E; Ex. 1008, [0037]. Accordingly, *Goodrich* discloses Claim 7 for the same reasons.

G. CLAIM 8

1. The system of claim 1, further comprising a control system for controlling the disruption system.

240. *Goodrich* describes that its interceptor UAV 110 ("the disruption system") includes a "guidance system 130 (e.g., computer-based or controlled)" that "control[s] and guide[s] the interceptor UAV 110 toward its target" ("a control system for controlling the disruption system"). Ex. 1008, [0014], [0019]. Accordingly, *Goodrich* discloses Claim 8.

H. CLAIM 9

1. The system of claim 8, further comprising a logging system that is configured to record activity of at least one of the identification receiver, the permission module, or the control system.

241. *Viggiano* teaches Claim 9 at least through its disclosure of tracking the results of consecutive authentication checks. As discussed above with reference to Limitation 1[e], *Viggiano* describes that if "two or more consecutive authentication response comparisons" are failed, "authenticator 10" ("the identification receiver," see supra, XV.B.3) "notifies a responsible higher command authority of the authentication failures, so that the responsible higher command authority can respond appropriately" or "issues an alert that is displayed to other ADS-B equipped aircraft, vehicles, vessels or stations." *See supra*, XV.B.6; Ex. 1007, [0015]. A POSITA would have understood that authenticator 10 operates as a "*logging system*" that "*records*" the comparisons made by comparator 60 ("*the activity of . . . the*

permission module," *see supra*, XV.B.4), to track the occurrence of "two or more consecutive" authentications. Accordingly, *Viggiano* discloses, or at least renders obvious, Claim 9.

242. In addition, it would have been obvious to a POSITA that for authenticator 10 to recognize that "two or more consecutive authentication response comparisons" are failed, authenticator 10 would have to record each failed comparison. Without such recording, every failed comparison would be interpreted as the first (or only) failure, and the detection of consecutive failures would not be possible. Thus, it would have been obvious that authenticator 10 operates as a "*logging system*" that "*records*" the comparisons made by comparator 60 ("*the activity of . . . the permission module*," *see supra*, XV.B.4), to track the occurrence of "***two or more*** consecutive" failed authentication comparisons.

243. Moreover, *Viggiano* explains that "if the ADS-B transmitter's message fails the MAC comparison, the authenticator recomputes the MAC using the last challenge unique identifier for the ADS-B transmitter, thereby reducing false identity authentication comparisons." Ex. 1007, [0029]. A POSITA would have understood that the authenticator operates as a "*logging system*" that "*records*" the "last challenge unique identifier" sent by the authenticator ("*the activity of . . . the identification receiver*," *see supra*, XV.B.3) to re-use that information in the case of a failed MAC comparison.

244. In addition, it would have been obvious to a POSITA that for the authenticator to use the last challenge unique identifier to recompute the MAC, the authenticator would have to record the last challenge unique identifier. Without such recording, it would not be possible for the authenticator to use that identifier to recompute the MAC. Thus, it would have been obvious that the authenticator operates as a "*logging system*" that "*records*" the "last challenge unique identifier" sent by the authenticator ("*the activity of . . . the identification receiver*," *see supra*, XV.B.3) to later use it as needed.

245. Accordingly, *Viggiano* discloses, or at least renders obvious, Claim 9.

XVI. GROUND 6: VIGGIANO, GOODRICH, AND FALK RENDER OBVIOUS CLAIM 4

A. MOTIVATION TO COMBINE

1. Viggiano and Goodrich

246. A POSITA would be motivated to combine *Viggiano* and *Goodrich* for the same reasons discussed above in Ground 3. *See supra*, XV.A.1.

2. Viggiano and Goodrich with Falk

247. A POSITA would have been motivated to combine and had a reasonable expectation of success in combining *Viggiano* and *Goodrich* as described above. *Supra*, XV.A.1, XVI.A.1. A POSITA would have been motivated to also combine those references with *Falk*. *Viggiano* discloses "authentication apparatus" that "employs an authentication challenge-response methodology and encryption

techniques to authenticate the identity of an ADS-B equipped aircraft." Ex. 1007, [0012]. As part of the disclosed authentication system, *Viggiano* explains that an ADS-B equipped aircraft includes an ADS-B transmitting system, which is used to broadcast the aircraft's "specific position data 24 and a unique ID 22, for example, a Mode S address." Ex. 1007, [0012]-[0013], Fig. 1. The unique ID, along with other information, such as a Message Authentication Code (MAC) 38, specific data 24 (which may include "such data as position, velocity, and intent" of an aircraft), are transmitted in an "authentication response 18," which "is broadcast as part of the Mode S ADS-B message." *Id*., [0013], [0016] ("In a preferred embodiment, . . . the authentication response 18 is broadcast as part of the Mode S ADS-B message, using unused and/or reserved bits in the Mode S ADS-B message."). The MAC 38 is then processed to determine if "the identity of the ADS-B transmitter" (i.e., the ADS-B equipped aircraft) is "authenticated." *Id*., [0015].

248. *Falk* discloses a "beacon" that is "attached to an unmanned aerial vehicle" and "includes an attachment mechanism configured to securely and removably attach the [beacon] to the unmanned aerial vehicle." Ex. 1011, [0010]; Ex. 1012 [0009]. "The beacon includes first indicia identifying an owner or responsible party, and second indicia identifying a particular unmanned aerial vehicle. At least a portion of the first and second indicia together form a unique identifier associating the owner or responsible party with the unmanned aerial

vehicle." Ex. 1011, [0012]; Ex. 1012, [0010]. *Falk* further provides that the beacon "may also include" a "remote communications module configured to participate on at least one wireless communications system as well as transmit and receive information across the at least one wireless communications system to and from a remote operator." Ex. 1011, [0012]; Ex. 1012, [0011]. *Falk* explains that the "indicia" (e.g., the information identifying a particular unmanned aerial vehicle) may be encoded into transmissions to a remote operator along with other data collected by a "sensory package," which a POSITA would have understood to occur via wireless communications. Ex. 1011, [0029]; Ex. 1012, [0024].

249. A POSITA would have been motivated for several reasons to implement *Falk*'s "beacon" as the "ADS-B transmission system" used by *Viggiano*'s aircraft to transmit their identification information (e.g., unique IDs) to *Viggiano*'s authentication apparatus.

250. First, design incentives and market forces would have motivated a POSITA to implement *Falk*'s beacon alongside *Viggiano*'s authentication apparatus. A POSITA implementing *Viggiano*'s authentication apparatus would have understood that its underlying authentication mechanism relies on receiving information, such as a unique ID and a MAC, from an "ADS-B equipped aircraft." Accordingly, a POSITA would have recognized that to improve the viability and effectiveness of the authentication apparatus, they would need to outfit aircrafts that

are not manufactured with the ability to communicate over wireless resources (e.g., ADS-B resources) with some mechanism for performing such communications, such as *Falk*'s beacon. Indeed, one of *Falk*'s design goals is to provide a more accessible solution for aircrafts (e.g., UAVs) to identify themselves in an effort to improve UAV regulation and security. Ex. 1011, [0003]-[0009]; Ex. 1012, [0002]-[0008].

251. A POSITA would have also recognized that UAV owners often own multiple UAVs, such that *Falk*'s beacon, which can be removed and attached to multiple UAVs, would have been an attractive mechanism for UAV identification for a considerable customer base.

252. Second, incorporating *Falk*'s beacon to transmit aircraft identity information is applying a known technique (*Falk*'s beacon for wireless communication of UAV identity information) to improve similar devices (*Whitmarsh*'s ADS-B equipped aircraft transmitting information such as a unique ID and MAC) in the same way. The results of the combination would be predictable: aircrafts that are configured with attachable (and removable) beacons for transmitting aircraft information. Indeed, this functionality is entirely consistent with *Falk*'s beacon operation, which is further configured for ADS-B-based wireless communication (e.g., on the 978 MHz UAT frequency band, a well-known ADS-B resource) as is done in *Viggiano*. Ex. 1011, [0029], [0046] (describing beacon's

compliance with ADS-B standard); Ex. 1012, [0024], [0027] (describing beacon's use of wireless communications networks operating on "frequencies from 500-980 MHz); Ex. 1009, 6:23-24 (describing the 978 MHz frequency as a "[d]esignated ADS-B" frequency known as the Universal Access Transceiver (UAT) band), Ex. 1017 (describing use of "978 UAT" resources for ADS-B out transmissions).

253. Accordingly, a POSITA would have been motivated to combine *Viggiano* with *Falk* and would have reasonably expected success in doing so.

B. CLAIM 4

1. The system of claim 1, wherein the identifier transmission system is configured to be reassigned from a first aerial system to a second aerial system.

254. The *Viggiano-Falk* combination renders obvious Claim 4. *Falk* discloses a "beacon" that is "attached to an unmanned aerial vehicle" and "includes an attachment mechanism configured to securely and removably attach the [beacon] to the unmanned aerial vehicle." Ex. 1011, [0010]; Ex. 1012 [0009]. "The beacon includes first indicia identifying an owner or responsible party, and second indicia identifying a particular unmanned aerial vehicle. At least a portion of the first and second indicia together form a unique identifier associating the owner or responsible party with the unmanned aerial vehicle." Ex. 1011, [0012]; Ex. 1012, [0010]. *Falk* further provides that the beacon "may also include" a "remote communications module configured to participate on at least one wireless communications system as

well as transmit and receive information across the at least one wireless communications system to and from a remote operator." Ex. 1011, [0012]; Ex. 1012, [0011]. *Falk* explains that the "indicia" (*e.g.*, the information identifying a particular unmanned aerial vehicle) may be encoded into transmissions to a remote operator along with other data collected by a "sensory package," which a POSITA would have understood to occur via wireless communications. Ex. 1011, [0029]; Ex. 1012, [0024].

255. Further, *Falk* explains that "once information is encoded in the indicia 120, including first or second indicia 121, 122, the information cannot be easily changed without detectible modifications to the beacon 100. This type of indicia is particularly useful when it is desirable to associate certain information with the particular owner or the UAV itself." Ex. 1011, [0026]; Ex. 1012, [0022].

256. In the *Viggiano-Goodrich-Falk* combination, a POSITA would have understood that *Falk*'s beacon would be incorporated into *Whitmarsh*'s UAV defense system to act as the ADS-B transmitting system ("*identifier transmission system*") that wirelessly transmits an associated ADS-B equipped aircraft's information, such unique ID and MAC, consistent with *Falk*'s description of the beacon as a component that configured to transmit information identifying an aircraft (*e.g.*, UAV) to a remote operator via wireless communications.

257. Under this combination, a POSITA would have understood that the beacon ("*the identifier transmission system*") is "*configured to be reassigned from a first aerial system to a second aerial system*." First, the beacon is configured to "securely and removably attach" to an aircraft, which a POSITA would have understood to mean it can attach (and reattach) to multiple different aircrafts. Ex. 1011, 3:38-41; Ex. 1012 [0009]. Accordingly, a POSITA would have understood that the beacon is able to be physically reassigned from one UAV ("*aerial system*") to another.

258. Second, it would have been obvious to a POSITA that the beacon would be reassigned electronically from one UAV to another. Although *Falk* explains that information associated with indicia of the beacon (*e.g.*, the UAV identity information) is not "easily" changeable, a POSITA would have understood that nothing in *Falk* suggests that the information associated with the indicia cannot be changed or reconfigured. Indeed, *Falk*'s explanation that it is not desirable to change a beacon's indicia when one wants to "associate certain information with the ***particular*** owner or the ***UAV that was used to collect the information***," suggests to a POSITA that changing the indicia (*e.g.*, UAV identity information) ***would be*** warranted when *Falk*'s beacon is removed from a first aircraft and attached to a second aircraft. Accordingly, it would have been obvious that under the *Viggiano-Goodrich-Falk* combination, the "*identifier transmission system*" (implemented as

Falk's beacon) would be "*configured to be reassigned from a first aerial system to a second aerial system*."

XVII. SECONDARY CONSIDERATIONS

259. I am not aware of any evidence of secondary considerations that would support a finding of nonobviousness of the '199 Patent. Should the Patent Owner put forth any alleged evidence of secondary considerations, I reserve the right to consider such evidence, to consider whether any such evidence has a nexus to any claims of the '199 Patent, and to update my analysis.

XVIII. CONCLUSION

260. All statements made herein of my own knowledge are true, and all statements made on information and belief are believed to be true. I further understand that willful false statements and the like are punishable by fine or imprisonment, or both under Section 1001 of Title 18 of the United States Code. I declare under penalty of perjury that the foregoing is true and correct.

Executed on February 10, 2025.

Dr. Girish Chowdhary

Appendix A

Girish Chowdhary

girishc@illinois.edu, 404-409-8518, 2003 Mullikin Drive, Champaign, IL 61822

1. PERSONAL HISTORY AND PROFESSIONAL EXPERIENCE

I. Educational Background

Royal Melbourne Institute of Technology	Aerospace Engineering	B.E. Hons. 2003
Georgia Institute of Technology	Aerospace Engineering	M.S. 2008
Georgia Institute of Technology	Aerospace Engineering	Ph.D. 2010

B. List of Academic Positions since Final Degree

Associate Professor, Donald Biggar Willet Faculty Fellow, ACES Office of Research Fellow
University of Illinois at Urbana-Champaign, Department of Agricultural and Biological Engineering *and* Department of Computer Science (*joint appointment*), Coordinated Sciences Lab (full member), Department of Aerospace Engineering (affiliate), Department of Electrical and Computer Engineering (affiliate)
Director, Distributed Autonomous Systems (DAS) Lab, and Field Robotics Science and Engineering Hub (FRESH)
Director, USDA Farm of the Future: I-FARM testbesd
Director, USDA-NRES Biden Harris Climate Smart Commodities Grant: I-COVER
Associate Director of Research, AI-FARMS National AI Institute
2020-

Assistant Professor
University of Illinois at Urbana-Champaign, Department of Agricultural and Biological Engineering (home), Coordinated Sciences Lab (full member), Department of Computer Science (affiliate), Department of Aerospace Engineering (affiliate), Department of Electrical and Computer Engineering (affiliate),), Institute of Genomic Biology (affiliate)
2016-2020

Assistant Professor
Oklahoma State University, School of Mechanical and Aerospace Engineering
2013-2016

Visiting Professor
Massachusetts Institute of Technology, Laboratory for Information and Decision Systems (LIDS)
Summer 2013

Postdoctoral Associate
Massachusetts Institute of Technology, Laboratory for Information and Decision Systems (LIDS), School of Aeronautics and Astronautics 2011-2013

Research Engineer II,
Georgia Institute of Technology, School of Aerospace Engineering 2010-2011

Postdoctoral Researcher,
Georgia Institute of Technology, School of Aerospace Engineering 2010-2010

C. Other Professional Employment

Chief Technology Officer and co-founder,
EarthSense Inc., Champaign, Illinois 2016-

VP of Autonomous Systems and co-founder
Unmanned Cowboys LLC, Stillwater, Oklahoma 2015-2016

Research Engineer,
The German Aerospace Center (DLR), Braunschweig, Germany 2004-2006

D. Honors, Recognitions, and Outstanding Achievements

1. **Illinois Innovation Network Award**, Food and Agriculture Category, Aug 2021
2. UIUC Campus internal competition for Blavatnik award nomination, August 2021
3. **ACES Office of Research Faculty Fellow**, University of Illinois at Urbana Champaign, College of Agricultural and Consumer Economics Sciences (ACES), 08/16/2020 – 08/15/2023
4. **Donald Biggar Willet Faculty Fellow**, University of Illinois at Urbana Champaign, Grainger College of Engineering, 08/16/2020 – 08/15/2023
5. **Dean's award for Excellence in Research**, University of Illinois at Urbana Champaign, Grainger College of Engineering, April 2020.
6. **Campus Insight presentation to the UIUC Board of Trustees**, University of Illinois Urbana Champaign, March 2020
7. Principle Investigator on Office of Naval Research prestigious Multi University Research Initiative (**MURI**) grant: A Cyberoctopus that learns, evolves, and adapts, 2019.
8. **Dave Ward Memorial award** by Aerospace Control Guidance and Systems Group (ACGSC) for outstanding contributions to Aerospace GNC, 2015
9. Recipient of the Air Force Office of Scientific Research **(AFOSR) Young Investigator Research Program (YIP)** award (AFOSR's most prestigious young faculty grant), 2015
10. Recipient of **best systems paper award at the 2018 Robotics Science and Systems** conference
11. Recipient of **best paper award** at the 2012 AIAA Guidance Navigation and Control Conference, out of over 600 papers
12. **Associated Fellow** (by nomination), American Institute of Aeronautics and Astronautics, 2017
13. **Senior Member** (elected), Institute of Electrical and Electronics Engineers, 2017
14. Sponsored **visiting professor** at The Institute of Flight Systems Dynamics of the Technical University of Munich, Summer 2014
15. Leader of the Georgia Tech Team that stood first overall, first in outdoor autonomy, and first in outdoor flight dynamics in the 2011 IMAV competition
16. Leader of the Georgia Tech Aerial Robotics Team that stood first in the 2010 AUVSI International Aerial Robotics Competition (IARC)

E. Invited Lectures and Invited Conference Presentations

1. Where are the Field Robots, Stanford Robotics Seminar, December 2024.
2. Farms of the Future, Lessons from the US MidWest, invited talk in Vision for Ag at CVPR 2024, June 2024.
3. Advancing AI for Agricultural and Environmental Sustainability, Cornell University, NY, May 2024
4. Advancing AI for Autonomous Field Robots, University of Florida, FL, March 2024
5. Small Robots for All Farms, Future of Agriculture Symposium, organized by Mahtma Phule Krishi Vidyapith (prominent agricultural university in India), Pune, December 2023
6. AIFARMS view on Digital Agriculture in India, Workshop on Digital Agriculture at the IEEE HiPC conference, Goa, India, December 2023
7. Farms of the Future, a View from Under the Canopy, Corteva Plant Sciences Symposia Series, "DA3: Digital Agriculture and Advanced Analytics – Innovation to the Service of Farmers", Kansas State University, October 2023
8. Farms of the Future for Saudi Arabia: Lessons from the US MidWest, King Abdullah University of Science and Technology (KAUST), Saudi Arabia, May 2023
9. The robots are coming to your farm to plant cover crops, US Soybean Research Collaborative, April 2023
10. Shell.AI Upskilling series: AI Advances for Field Robotics, July 2022
11. The robots are coming to you farm: Autonomous and Intelligent Robots in Unstructured Field Environments, Phenorob center of excellence, Bonn University, July 2022.
12. The robots are coming to you farm, Michigan State Univeristy, Robotics and Control Seminar, November 2021.

13. The robots are coming to your farm, ICT Applications in Agriculture, Agricultural College NAIRA, Andhra Pradesh, India, October 2021.
14. IoT for Agriculture, IoT Day @ ACM MobiSys 2021, June 2021
15. The robots are coming to your farm, King Abdullah University of Science and Technology (KAUST) research conference on robotics and autonomy, April 2021
16. The robots are coming to your farm, Berkeley Sankar Sastry Semi-Autonomous Seminar, March 2021
17. Keynote speaker, SEMATRON National Symposium on Mechatronics from Undergraduate Students, Brazil chapter webinar, Nov 2020
18. Invited speaker: IEEE Robotics and Automation Society (RAS) SB Webinar, Nov 2020
19. Invited speaker: RSS workshop 'Robots in the Wild: Challenges in Deploying Robust Autonomy for Robotic Exploration', July 2020, Robotics Science and Systems conference, (held online due to COVID-19)
20. Invited` speaker in the AAAS Policy Fellows symposium, Living with AI: The Human Impacts of AI, Interactive Panel: The Role of AI in Producing Your Produce, June 2020 (held online due to COVID-19)
21. Tackling the herbicide resistant weed crisis with teams of mechanical weeding agbots, Weed Science Society of America (WSSA) annual Symposium, Maui, HI, March 2020
22. The Robots are Coming, to Your Farms, Carnegie Mellon Robotics Institute (RI) seminar, Nov 2019
23. The Robots are Coming, to Your Farms, Massachusetts Institute of Technology, LIDS seminar, September 2019
24. The Robots are Coming, to Your Farms, Brown University, Robotics Talk, March 2019
25. Compact and Autonomous robots for High-Throughput Phenotyping, invited talk at 2019 Genomes to Fields collaborator meeting at Phenome conference, January 2019
26. Autonomous and Intelligent Robots in Unstructured Field Environments, Zhejiang University, Invited lecture, College of Agriculture and Biotechnology, Hangzhou, China, July 2018
27. Autonomous and Intelligent Robots in Unstructured Field Environments, Bio Robotics conference at the China Agricultural University, invited semi-plenary speech, Beijing, China, July 2018
28. Autonomous and Intelligent Robots in Unstructured Field Environments, Robotics Seminar, Cornell University, April 2018
29. The Robots are Coming, to Your Farm, Iowa State, INTRANS seminar, March 2018
30. The Robots are Coming, to Your Farm, Iowa State, Department of Aerospace Engineering seminar, March 2018
31. The Robots are Coming – For your Food, Colorado State University, Sept 2017
32. Differentially Constrained Machine Learning for Distributed Autonomy, United Technologies Research Center (UTRC), Feb 2017
33. Differentially Constrained Machine Learning, Coordinated Science Laboratory Decision and Control Seminar, University of Illinois at Urbana Champaign, Nov 2016
34. Hardware-in-the-Loop Simulation for UAS Research, Workshop on Realistic Rapid and Repeatable Robot Simulations (R4SIM), Robotics Science and Systems Conference, July 2015
35. Algorithms for Data-Driven Monitoring of Massive Scaled Spatiotemporal Processes with Unmanned Aerial Systems, IEEE Real-Time Computing and Robotics Conference (RCAR), June 2015, *Keynote speech*
36. Systems Theoretic Bayesian Machine Learning for Autonomous Decision Making over Massive Spatiotemporal Scales, Georgia Institute of Technology, Institute of Robotics and Intelligent Machines seminar, May 2015.
37. Data-Driven Adaptive Systems for Robust Autonomy, Stanford Department of Aeronautics and Astronautics, San Jose, CA, December 2014.
38. Data-Driven Autonomous Monitoring of Massive Scaled Spatiotemporal Processes, Massachusetts Institute of Technology, Laboratory of Information and Decision Systems, Cambridge, MA, December 2014

39. Data-Driven Autonomous Monitoring of Massive Scaled Spatiotemporal Processes, The Lincoln Lab at Massachusetts Institute of Technology, Lexington, MA, December 2014.

F. Offices Held in Professional Societies

1. IEEE (Institute of Electrical and Electronics Engineers), Senior Member (elected), Robotics and Automation Society member, Control Systems Society member, Technical Committee on System Identification member,
2. AIAA (American Institute of Aeronautics and Astronautics) Associate Fellow (by nomination) Guidance, Navigation, and Control Committee member, AIAA Intelligent Systems Committee, member
3. ASABE (American Society of Agricultural and Biological Engineers), member, committee member representing ASABE on IFAC (International Federation of Automatic Control) Control in Agriculture committee

G. Editorships of Journals or Other Publications

1. **IEEE Transactions on Neural Networks and Learning Systems** (TNNLS, impact factor 11.683), associate editor, Jan 2018-
2. **AIAA Journal of Aerospace Information Systems**, Guest Editor for Special Issue on Estimation and Information Theory Applications for Resilient and Distributed Operation of Aerospace Systems, with Girish Chowdhary (lead), Raj Sharma, Adam Rutkowski
3. **AIAA Journal of Aerospace Information Systems**, Guest editor for Special issue on applications of Reinforcement Learning and Learning Based Adaptive Control to Mechanical and Aerospace Systems, with J. P. How (lead), Alborz Geramifard, Thomas Walsh, Nicholas Roy
4. **AIAA Guidance Navigation and Control Conference**, associate edtor 2017, 18, 19
5. **IEEE Conference on Decision and Controo,** associate editor 2018

H. Review committees for peer-reviewed conferences

1. Robotics Science and Systems (**RSS**): Since 2014
2. International Conference on Robotics and Automation (**ICRA**): Since 2012
3. International Conference on Intelligent Robots and Systems (**IROS**): Since 2010
4. Neural Information processing Systems (**NeurIPS**): Since 2015
5. International Conference on Machine Learning (**ICML**): Since 2015
6. Control and Decision Making: IEEE Conference on Decision and Control (**CDC):** Since 2008
7. American Control Conference (**ACC):** Since 2008
8. Reinforcement Learning and Decision Making (**RLDM**): 2013, 14, 16
9. AIAA Guidance Navigation and Control Conference (**GNC**) now part of AIAA SciTech Forum: Since 2009

I. Grants Received

Principal Investigator (PI), Co-P Investigator (Co-PI)	Funding Agency	Title	Funding Year(s)	Total Funding	Funding Specific to Candidate
Competitive External Funding					

Principal Investigator (PI), Co-P Investigator (Co-PI)	Funding Agency	Title	Funding Year(s)	Total Funding	Funding Specific to Candidate
PI: G. Chowdhary Co-PIs: Di Fulvio A., Atallah S., Soman C., Quansah J., Schange R.	USDA/NRCS	iCOVER: Innovative Cover-crop Opportunity, Verification, and Economy stimulating technology for underserved farmers using Robotics	2023-2027	$4,999,999	$400,000
PI. G. Chowdhary CO-PIs**:** K. Guan, I. Condotta, M. Khanna, D. Vashishth, V. Adve, S. Atallah, D. K. Lee, A. Margenot	NIFA	Supplement to: I-FARM: Illinois Farming and Regenerative Management Testbed (NIFA Farm of the Future)	2023-2025	$370,000	$50,000
PI. G. Chowdhary CO-PIs**:** K. Guan, I. Condotta, M. Khanna, D. Vashishth, V. Adve, S. Atallah, D. K. Lee, A. Margenot	NIFA	I-FARM: Illinois Farming and Regenerative Management Testbed (NIFA Farm of the Future)	2022-2025	$3,936,000.00	$300,000
PI: G. Chowdhary Co-PIs: K. Hauser, G. Krishnan, R. Mittal Collaborative proposal with Iowa State, Iowa State PI: S. Sarkar, Co-PIs: B. Ganapatisubramanyam (Iowa State), A. Singh (Iowa State), N. Merchant (Arizona State), A. Johri (George Mason)	NSF-NIFA	CPS: Frontier: Collaborative Research: COALESCE: COntext Aware LEarning for Sustainable CybEr-agricultural systems	2021-2026	2,000,000 (to UIUC) 5,000,000 (to Iowa state)	500,000
PI: G. Chowdhary Co-PIs: H. Tran, Sreenivas Ramavarappu, J. Yedetore, H. Fillippini	ARL	Robust and Adaptive Autonomy for Multi-Agent Maneuvers (RAAMM)	2020-22	$865,755	$288,000
PI: G. Chowdhary Co-PIs: H. Tran, Sreenivas Ramavarappu, J. Yedetore, H. Fillippini	CERL	RAIDE: Robust Autonomy in Denied Environments, Option 1	2020-21	$723,783	$369,656

Principal Investigator (PI), Co-P Investigator (Co-PI)	Funding Agency	Title	Funding Year(s)	Total Funding	Funding Specific to Candidate
PI: G. Chowdhary Co-PIs: M. Gazzolla, P. Mehta, R. Gillette (UIUC), I. Solstestz, W Gilly (Stanford), J. Rogers (NorthWestern)	ONR	A *Cyberoctopus* that Learns, Evolves, and Adapts	2019-24	$7,500,000	$1,420,000
PI: G. Chowdhary Co-PIs: H. Tran, Sreenivas Ramavarappu, J. Yedetore, H. Fillippini	CERL	RAIDE: Robust Autonomy in Denied Environments	2019-20	$400,459	$200,000
PI: G. Chowdhary Co-PIs: G. Krishnan, M. Gazzolla, S. Lovell	NSF-USDA	NRI:INT: Multipurpose Dexterous Soft and Continuum Arms for Compact Ag-bots	2018-21	$899,998	$300,000
PI: G. Chowdhary Co-PIs: Adam Davis, R. Srikant, Chinmay Soman	NSF-USDA	CPS: Medium: Robust Deep-Learning and Decision-Making for Mechanical Weeding Agbots	2018-21	$885,168	$295,056
PI: G. Chowdhary Co-PIs: Christopher Crick, Charles Abramson, Prabhakar Pagilla	NSF	NRI: Collaborative Goal and Policy Learning from Human Operators of Construction Co-Robots	2015-18	$900,000	$300,000
PI: G. Chowdhary	NSF	I-Corps: Online Image Analysis and Dynamic Mission Planning for Unmanned Aerial Vehicles	2017-18	$50,000	$50,000
PI: G. Chowdhary	AFOSR	Young Investigator Proposal: Robust Adaptive Autonomy in Contested Environments	2015-18	$365,655	$365,655
PI: G. Chowdhary	Sandia	Robust Autonomy in Contested Environments	2017-19	$160,000	$160,000
PI: G. Chowdhary	Sandia	Fault-Tolerant Adaptive Control for Over Actuated Aircraft	2018-2020	$150,000	$150,000

Principal Investigator (PI), Co-P Investigator (Co-PI)	Funding Agency	Title	Funding Year(s)	Total Funding	Funding Specific to Candidate
PI: G. Chowdhary	NASA	Adaptive Multi-Objective Optimization Control for Active Wing Shaping on Efficient Lightweight Transport Aircraft	2014	$35,515	$35,515
PI: E. Soltanaghai Co-PIs: Alipour M., **Chowdhary G.**, Gabriel R., Watts A.	NASA	UAS-Mounted Canopy Penetrating Radar-Tag System for Understory Fuel Sensing	2025-2028	$1,893,864	$250,00
PI: G. Krishnan Co-PIs: **G. Chowdhary**, Uppalpati N., Ahers K., Shady A.	NIFA	Robotics Integrated High Tunnels (RobInHighTs): Creating Profitable food oases in Urban ecosystems	2023-2026	$975,000	$360,000
PI: S. McCouch, M. (Cornell) Jose (Cornell), S. Moose (UIUC), R. Mosher (U. Arizona), A. Stook (Cornell), and others including G. Chowdhary	NSF	Center for Research on Programmable Plant Systems (CROPPS)	2021	$25,000,000	$280,000
PI: V. Adve, Co-PI: L. Ainsworth, **G. Chowdhary**, S. Guha (U. Chicago), T. Mockler (Danforth)	NSF-NIFA	AI Institute: Artificial Intelligence for Future Agricultural Resilience, Management, and Sustainability (AIFARMS)	2020-25	$20,000,000	$525,000
PI: C. Soman (EarthSense Inc.), Co-PI: **G. Chowdhary**	NSF	SBIR Phase I: TerraSentia: Ultra-compact, Autonomous, Teachable Under-canopy Phenotyping Robot for Plant Breeders and Crop Scientists	2018-19	$225,000	$75,000

Principal Investigator (PI), Co-P Investigator (Co-PI)	Funding Agency	Title	Funding Year(s)	Total Funding	Funding Specific to Candidate
PI: C. Soman (EarthSense Inc.), Co-PI: **G. Chowdhary,** V. Adve	NSF	STTR Phase II: TerraSentia: Ultra-compact, Autonomous, Teachable Under-canopy Phenotyping Robot for Plant Breeders and Crop Scientists	2020-22	$750,000	$228,558
PI: C. Soman (EarthSense Inc.), Co-PI: **G. Chowdhary,** K. Hauser	NSF	STTR Phase I: Autonomous disinfecting robot for crowded spaces Source of Support	2020-21	$256,000	$80,377
PI: H. Tran, Co-PIs: **G. Chowdhary**, Sreenivas Ramavarappu	ONR	Explainable AI for Mission Planning and Execution with Interpretable Courses of Action	2020-22	$899,069	$200,000
PI: H. Tran, Co-PIs: **G. Chowdhary**, Sreenivas Ramavarappu, H. Filippini, J. Yedetore	DARPA	A Demonstration Platform for Dynamic Mission Planning with Multi-Domain Autonomous Systems	2018-2018	$250,458	$200,000
PI: S. Long **Co-PIs**: University of Illinois (**G. Chowdhary,** D. Ort, P. Brown, C. Bernacchi, K. Guan, D. LeBauer), Cornell University (E. Buckler, M. Gore), Signetron Inc. (A. Zakhor)	ARPA-E (DOE)	TERRA-MEPP (Mobile Energy-Crop Phenotyping Platform)	2015-17	$3,100,000	$898,374
PI: S. Long Co-PIs: University of Illinois (**G. Chowdhary**, D. Ort, C. Bernacchi, K. Guan, D. LeBauer), Cornell University (E. Buckler, M. Gore), Signetron Inc. (A. Zakhor)	ARPA-E (DOE)	Plus-Up TERRA-MEPP (Mobile Energy-Crop Phenotyping Platform)	2017-19	$2,000,000	$457,439

Principal Investigator (PI), Co-P Investigator (Co-PI)	Funding Agency	Title	Funding Year(s)	Total Funding	Funding Specific to Candidate
PI: S. Long Co-PIs: University of Illinois (**G. Chowdhary**, D. Ort, C. Bernacchi, L. Ainsworth)	Bill and Melinda Gates Foundation	RIPE (Realizing Increased Photosynthetic Efficiency)	2017-19	$28,730,247	$205,838
PI: J. Czarnecki (Mississippi state) Co-PIs: **G. Chowdhary** (UIUC), Alex Thomasson (TAMU)	USDA	Enhancing Accessibility, Reliability, and validation of actionable information from Unmanned Aerial Vehicle Image Data	2018-20	$593,397	$156,830
PI: S. Joshi (NextGen Aeronautics) Co-PIs: **G. Chowdhary** E. Kapaniya (VT)	NASA	LEARN: Versatile Experimental Autonomy Research Aircraft Technology (VEARAT)	2016	$250,000	$97,106
PI: S. Joshi (NextGen Aeronautics) Co-PI: **G. Chowdhary**	DARPA	IMPROV: Kamikaze Autonomous Swarms	2016-17	$130,000	$60,000
PI: S. Karaman (MIT) Co-PI: **G. Chowdhary**	AFOSR	Dynamic Data-Driven Motion-Planning and Control for Pervasive Situational Awareness Application Systems	2014-17	$956,674	$359,951
PI: P. Clark (OSU) Co-PIs: OSU (J. Jacob, **G. Chowdhary,** T. Lay, J. Pashin, N. Materer)	DOE	Surface and Airborne Monitoring Technology for Detecting Geological Leakage in a COR-Enhanced Oil Recovery Pilot	2013-16	$894,674	$250,000
PI: **G. Chowdhary**	NASA	Developing Adaptive Controllers for Active Wing Shaping on Efficient Lightweight Transport Aircraft	2013	$2500	$2500

I. Grant Review Panels

NSF (National Science Foundation): participated in multiple panels including CISE, ENG, and joint NSF-NIFA panels; **Singapore Ministry of Education**; **AFOSR** (Air Force Office of Scientific Research); **National Research Foundation of Korea** (South Korea); **The Nederland Organization for Scientific Research** (Netherlands); **United Arab Emirates University** (UAE).

2. PUBLICATIONS AND CREATIVE WORKS

Candidate name appears in bold font**;** Names of student and post-doc authors primarily advised by the candidate are underlined; *Names of students* on whose thesis committee the candidate is/was, but was not the primary advisor, appear in italics

A. Doctoral thesis

Concurrent Learning for Convergence in Adaptive Control Without Persistency of Excitation, **Girish Chowdhary**, Georgia Institute of Technology, December 2010

B. Chapters in Books (in print or accepted)

1. **Chowdhary G.**, *Muhlegg M.*, How J. P., Holzapfel F., Concurrent Learning Adaptive Model Predictive Control, pp. 29-47, in Advances in Aerospace Guidance, Navigation, and Control, Springer Berlin Heidelberg, 2013.
2. Kannan S., **Chowdhary G.**, Johnson E., Adaptive Control of Unmanned Aerial Vehicles – Theory and Flight Test Results, Springer handbook of UAVs, January 2014.
3. Chowdhary G., Frazzoli E., **How J.**, Lui H., Nonlinear Flight Control Techniques for Unmanned Aerial Vehicles, Springer handbook of UAVs, January 2014.
4. How J., Frazzoli E., **Chowdhary G.**, Linear Flight Control Techniques for Unmanned Aerial Vehicles, to appear in the Springer handbook of UAVs, January 2014.
5. Ure, N. K., **Chowdhary G.**, How J. P., Vian J., Multi-Agent Planning for Persistent Surveillance, in Planning Under Uncertainty, Chapt. 12, MIT Press, February 2014.
6. Axelrod A., **Chowdhary G.**, The Explore-Exploit Dilemma in Nonstationary Decision Making under Uncertainty, in Handling Uncertainty and Networked Structure in Robot Control, edited by Lucian Bucinou and Levante Tamas, Vol. 42, Chapt. 2, Springer Switzerland, February 2016.
7. Carlone L., Axelrod A., Karman S., **Chowdhary G.**, Aided Optimal Search: Data-Driven Target Pursuit from On-Demand Delayed Binary Observations, Dynamic Data Driven Application Systems, October 2017.
8. Axelrod A., Carlone L., **Chowdhary G.**, Karaman S., Data-driven Prediction of Confidence for EVAR in Time-varying Datasets, Dynamic Data Driven Application Systems, October 2017.
9. Mehendiratta M., Kayacan Erkan, Patel S., Kayacan Erdal and **Chowdhary G.**, Learning-based Fast Nonlinear Model Predictive Control for Custom-made 3D Printed Ground and Aerial Robots, Handbook of Model Predictive Control, Springer, Control Engineering Series, editor Saša V. Raković, William S. Levine, 2018.
10. **Chowdhary G.**, Joshi G., Havens A., Reinforcement Learning and Adaptive Control, In Encyclopedia of Systems and Control, Baillieul J., Samad T. (eds). Springer, London, 2020.

C. Articles in Journals (in print or accepted)

1. Anderson R., **Chowdhary G.**, Johnson E., Comparison of RBF and SHL Neural Network Based Adaptive Control, **Journal of Intelligent and Robotic Systems** (**JIRS**), Springer, vol. 54, no. 1-3, pp. 183-199, Sept 2008.
2. **Chowdhary G.**, Jategaonkar R.., Parameter Estimation from Flight Data Applying Extended and Unscented Kalman Filter, **Aerospace Science and Technology** (**AST**), Vol. 14, no. 2, pp. 106-117, March 2010.
3. **Chowdhary G.**, Srinivasan S., Johnson E., Frequency Domain Method for Real-Time Detection of Oscillations, **AIAA Journal of Aerospace Computing, Information, and Communication** (JACIC now **JAIS**), Vol. 8, No.2, pp. 42-52, February 2011.
4. **Chowdhary G.**, Johnson E., Theory and Flight Test Validation of a Concurrent Learning Adaptive Controller, **AIAA Journal of Guidance Control and Dynamics** (**JGCD**), Vol. 34, No. 2, pp. 592-607, March-April 2011.

5. Kingravi H., **Chowdhary G.**, Vela P., Johnson E., A Reproducing Kernel Hilbert Space Approach for the Online Update of Radial Bases in Neuro-Adaptive Control, **IEEE Transactions on Neural Networks and Learning Systems** (**TNNLS**), Vol 23, no. 7, pp 1130-1141, July 2012.
6. **Chowdhary G.**, Sobers D. M., Pravitra C., Christmann C., Wu A., Hashimoto H., Ong C., Kalghatgi R., Johnson E., Self-Contained Ranging Sensor Aided Guidance, Navigation, and Control for Autonomous Indoor Flight, **AIAA Journal of Guidance Control and Dynamics** (**JGCD**), Vol. 35, No. 6, pp. 1843-1854, Nov-Dec 2012.
7. **Chowdhary G.**, Yucelen T., Mühlegg M, Johnson E, Concurrent Learning Adaptive Control of Linear Systems with Exponentially Convergent bounds, **Wiley International Journal of Adaptive Control and Signal Processing** (**IJACSP**), Vol 27, No. 4, pp 280-301, April 2013.
8. **Chowdhary G.**, Mühlegg M., Johnson E., Exponential Stability Guarantees for Adaptive Systems using Online Recorded Data, **International Journal of Control** (**IJC**), Vol 87, No. 8, pp 1583-1603, Dec 2013.
9. **Chowdhary G.**, Johnson E., Chandramohan R., Kimbrell M. S., Calise A., Guidance and Control of Airplanes Under Actuator Failures and Severe Structural Damage, **AIAA Journal of Guidance Control and Dynamics** (**JGCD**), vol 36, No. 4, pp. 1093-1104, 2013.
10. **Chowdhary G.**, Sobers M., Salün E., Ottander J., Fully Autonomous Indoor Flight Relying on Five Very Low-Cost Range Sensors, **AIAA Journal of Aerospace Information Systems** (**JAIS**), Vol 10, No. 1, pp 21-31, January 2013.
11. **Chowdhary G.**, Johnson E., Magree D., Wu D., Shein A., GPS-Denied Indoor and Outdoor Monocular Vision Aided Navigation and Control of Unmanned Aircraft, **Journal of Field Robotics** (**JFR**), Vol 30, No. 3, pp 415-438, March 2013.
12. Wu D., Johnson E., Dallaert F., Kaess M., **Chowdhary G.**, Autonomous Flight in GPS-Denied Environments Using Monocular Vision and Inertial Sensors, **AIAA Journal of Aerospace Information Systems** (**JAIS**), Vol 10., No. 4, pp. 172-186, April 2013.
13. Geramifard A., Walsh T. J., Tellex S., **Chowdhary G.**, Roy N., How J. P., A Tutorial on Linear Function Approximators for Dynamic Programming and Reinforcement Learning, **Foundations and Trends in Machine Learning** (**FTML**), vol. 6, No. 4, December 2013.
14. Ure N. K., **Chowdhary G.**, Chen Y. F., How J. P., Distributed Learning for Planning Under Uncertainty Problems with Heterogeneous Teams, **Journal of Intelligent and Robotic Systems** (**JIRS**), Vol 74, No. 1-2, pp 529-544, April 2014.
15. Ure N. K., **Chowdhary G.**, Toksoz T., How J. P., Vavrina M., Vian J., An Automated Battery Management System to Enable Persistent Missions with Multiple Aerial Vehicles, **IEEE Transactions on Mechatronics**, Vol. 20, No. 1, pp. 275-286, Jan 2014.
16. Grande R., **Chowdhary G.**, How J. P., Experimental Validation of Bayesian Nonparametric Adaptive Control using Gaussian Processes, **AIAA Journal of Aerospace Information Systems** (**JAIS**), special issue on applications of reinforcement learning and learning based adaptive control to mechanical and aerospace systems, Vol 11, pp 565-578, July 2014.
17. Mu B., **Chowdhary G.**, How J. P., Efficient Distributed Sensing using Adaptive Censoring Based Inference, **Automatica**, Vol 50, No 6, pp 1590-1602, June 2014.
18. **Chowdhary G.**, Kingravi H., How J. P, Patricio V., Bayesian Nonparametric Adaptive Control using Gaussian Processes, **IEEE Transactions in Neural Networks and Learning Systems** (**TNNLS**), Vol 26, No. 3, pp. 537-550, March 2015.
19. **Chowdhary G.**, Liu M., Grande R., Walsh T., How J. P., Carrin L., Off-Policy Reinforcement Learning with Gaussian Processes, IEEE/CAA Journal of **Automatica Sinica** special issue on advances in reinforcement learning and adaptive control, Vol 1, No. 3, pp 227-238, Jan 2015.
20. Ure N. K., **Chowdhary G.**, How J. P., Vian J., Health-Aware Planning Under Uncertainty for Collaborative Heterogeneous Teams of Mobile Agents, **Unmanned Systems**, Vol 3, No. 2, pp 89-107, April 2015.

21. Grande R., Walsh T., Fergusson S., **Chowdhary G.**, and How J. P., Online Regression for Data with Changepoints using Gaussian Processes and Reusable Models, **IEEE Transactions of Neural Networks and Learning Systems** (**TNNLS**), vol. 28, no. 9, pp 2115-2128, June 2016.
22. Kamalapurkar R., Reish B., **Chowdhary G.**, Dixon W., Concurrent Learning for Parameter Estimation Using Dynamic State-Derivative Estimators, **IEEE Transactions on Automatic Control** (**TAC**), Vol. 62, Issue 7, pp 3594-3601, February 2017.
23. Liu M., **Chowdhary G.**, Bruno D. S., How J. P., Shih-Yuan L., Gaussian Processes for Learning and Control: Tutorial with Examples, **IEEE Control Systems Magazine** (**CSM**), vol. 38, no. 5, pp. 53-86, Oct 2018.
24. Kayacan E., Peschel J., **Chowdhary G.**, A Self-Learning Disturbance Observer for Nonlinear Systems, **IFAC Engineering Applications of Artificial Intelligence**, Vol. 62, pp 276-285, April 2017.
25. Kayacan E., Young S., Peschel J., **Chowdhary G.**, High Precision Control of Tracked Field Robots in the Presence of Unknown Traction Coefficients, Journal of Field Robotics (**JFR**), Vol. 35, no. 7, pp 1050-1062, June 2018.
26. Sheng W., Tran D., Manh Do H., Bai H., **Chowdhary G.**, Real-Time Detection of Distracted Driving based on Deep Learning, **IET Intelligent Transport Systems**, vol 12, no. 10, pp 1210-1219, July 2018.
27. Shamshiri, Redmond R. S., Weltzien C., Hameed I. A., Yule I. J., Grift T. E., Balasundram S. K., Pitonakova L., Ahmad D., and **Chowdhary G.**, Simulation software and virtual environments for acceleration of agricultural robotics: Features highlights and performance comparison, **International Journal of Agricultural and Biological Engineering**, Vol. 11, no. 4, pp. 15-31, Aug 2018.
28. Shamshiri, Redmond R. S., Weltzien C., Hameed I. A., Yule I. J., Grift T. E., Balasundram S. K., Pitonakova L., Ahmad D., and **Chowdhary G.**, Research and development in agricultural robotics: A perspective of digital farming, **International Journal of Agricultural and Biological Engineering**, Vol. 11, no. 4, pp 1-14, Aug 2018.
29. Kayacan E., **Chowdhary G.**, Tracking Error Learning Control for Precise Mobile Robot Path Tracking in Outdoor Environment, **Journal of Intelligent Robotic Systems** (**JIRS**), https://doi.org/10.1007/s10846-018-0916-3, Aug 2018.
30. Kieson E., Harshal M., Charles A., Crick C., Chowdhary G., Robots Can Train Humans Using Principles of Operant Conditioning Through Visual Reinforcement Tools, **Journal of Comparative Psychology**, vol. 31 September 2018.
31. Higuti Vitor A. H., Velasquez A. E. B., Magalhaes D. V., Becker M., **Chowdhary G.**, Under canopy light detection and ranging-based autonomous navigation, **Journal of Field Robotics** (**JFR**), Vol. 36, no. 3, pp. 547-567, May 2019.
32. McAllister W., Osipychev D., **Chowdhary G.**, Davis A., Agbots: Weeding a Field with a Team of Autonomous Robots, **Computers and Electronics in Agriculture** (**CEA**), Vol. 163, pp. 104827, May 2019.
33. Jayaraman B., Lu C., Whitman J., **Chowdhary G.**, Spare Feature-Map based Markov Models for Nonlinear Fluid Flows, **Computers and Fluids**, 191, 104252, 2019.
34. Abdollahi A., Chowdhary G., Adaptive-Optimal Control under Time-varying Stochastic Uncertainty Using Past Learning, **International Journal of Adaptive Control and Signal Processing (IJACSP)**, Vol. 33, pp 1803–1824, September 2019.
35. Cai Y., Guan K., Nafziger E., **Chowdhary G.**, Peng B., Jin Z., Wang S., and Wang S., Detecting in-season crop nitrogen stress of corn for field trials using UAV- and CubeSat-based multispectral sensing, **IEEE Journal of Selected Topics in Applied Earth Observations and Remote Sensing**, vol. 12, no. 12, pp. 5153-5166, Dec. 2019.
36. Gage J., Richard E., Lepak N., Kaczmar N., Soman C., **Chowdhary G.**, Gore M., Buckler E., In-Field Whole-Plant Maize Architecture Characterized by Subcanopy Rovers and Latent Space Phenotyping, the **Plant Phenome Journal**, 2: 1-11 190011, 2019.
37. **Chowdhary G.**, Gazzola M., Krishnan G., Soman C., Lovell S., Soft Robotics as an Enabling Technology for Agroforestry Practice and Research, **Sustainability** special issue on Agroforestry and Ecosystem Regeneration, Nov 2019, 11, 6751.

38. Guoxiang R., Yibin Y., **Chowdhary G.**, Lin T., Ting K.C., Agricultural Robotics Research Applicable to Poultry Production: A Review, **Computers and Electronics in Agriculture**, (**CEA**) Vol. 169, 2020 .
39. Kayacan E., Zhongzhong Z., Thompson B., **Chowdhary G.**, High Precision Control and Deep Learning-based Corn Stand Counting Algorithms for Agricultural Robot, **Autonomous Robots**, Vol. 44, pp. 1289–1302, Jun 2020.
40. Zongyao J., Maske H., **Chowdhary G.**, Pagilla P., Task Learning, Intent Prediction, and Adaptive Blended Shared Control with Application to Excavators, **IEEE Transactions on Control Systems Technologies** (**TCS**), Vol. 29, Issue 1, pp. 18-28 Jan 2021.
41. Sun, R., Greene M., Le D., Zachary B., **Chowdhary G.**, Dixon W., Lyapunov-Based Real-Time and Iterative Adjustment of Deep Neural Networks, **IEEE Control Systems Letters** (**L-CSS**), vol. 6, pp. 193-198, January 2021.
42. Mohamadipanah H., Heydari M., **Chowdhary G.**, Deep Kernel Recursive Least-Squares Algorithm, Springer **Nonlinear Dynamics**, Vol. 104, pp 2515–2530, April 2021.
43. Whitman J., Maske H., Kingravi H., **Chowdhary G.**, Evolving Gaussian Processes and Kernel Observers for Learning and Control in Spatiotemporally Varying Domains, **IEEE Control Systems Magazine** (**CSM**), Vol. 41, no. 1, pp. 30-69, Feb 2021, *cover-page article*.
44. Naughton N., Sun J., Tekinalp A., **Chowdhary G.**, Gazzola M., Elastica: A compliant mechanics environment for soft robotic control, **IEEE Robotics and Automation Letters** (**RA-L**), vol. 6, no. 2, pp. 3389-3396, April 2021.
45. McAllister W., Whitman J., Varghese J. D., Davis A., **Chowdhary G.,** Agbots 3.0: Adaptive Weed Growth Prediction for Mechanical Weeding Agbots, **IEEE Transactions on Robotics** (**TRO**), vol. 38, no. 1, pp. 556-568, Feb. 2022.
46. Sun, R., Greene M., Le D., Zachary B., **Chowdhary G.**, Dixon W., Lyapunov-Based Real-Time and Iterative Adjustment of Deep Neural Networks, **IEEE Control Systems Letters** (**L-CSS**), Vol 6, pp 193-198, June 2021.
47. Tianchen J., Sivakumar A. N., **Chowdhary G.**, Driggs-Campbell K., Proactive Anomaly Detection for Robot Navigation with Multi-Sensor Fusion, **Robotics and Automation Letters** (R-AL), vol. 7, no. 2, pp. 4975-4982, April 2022.
48. Mishra P., **Chowdhary G.**, Mehta G., Minimum Variance Constrained Estimator, **Automatica**, Vol. 137, March 2022
49. Choi J. W., Borkar A., Singer A., **Chowdhary G.**, Broadband Acoustic Communication Aided Underwater Inertial Navigation**, Robotics and Automation Letters** (**R-AL** joint with **ICRA**), accepted January 2022
50. Baquero A., Higuti V. A., Gasparino M. V., Sivakumar A. N., Becker M., **Chowdhary G.** Multi-Sensor Fusion based Robust Row Following for Compact Agricultural Robots, **Journal of Field Robotics** (**JFR**), accepted February 2022.
51. Kamtikar S., Marri S., Walt B., Uppalapati K. N., Krishnan G., **Chowdhary G.**, Visual Servoing for Pose Control of Soft Continuum Arm in a Structured Environment, Jointly published in **Robotics and Automation Letters** (**R-AL** joint with IEEE 5th International Conference on Soft Robotics (**RoboSoft**)), Edinburgh, Scotland, UK, April 2022.
52. Khanna M., Atallah S., Saurajyoti K., Sharma B., Wu L., Yu C., **Chowdhary G.**, Soman C., Guan K., Digital Transformation for a Sustainable Agriculture in the US: Opportunities and Challenges, **Agricultural Economics**, Vol. 53, No. 6, pp 924-937, July 2022
53. Gasparino M., Narenthiran A., Liu Y., Velasquez A., Higuti A., Rogers J. III, Tran H. T., **Chowdhary G.**, WayFAST: Traversability Predictive Navigation for Field Robots, **Robotics and Automation Letters** (**R-AL)** joint with **IROS** 2022
54. Davidson C., Jagannath V., Narenthiran A. S., Czarnecki J. P., Chowdhary G., NDVI/NDRE Prediction from Standard RGB Aerial Imagery Using Deep Learning, **Computers and Electronics in Agriculture** (**CEA**), Vol 203, 107396, December 2022.
55. Zegers F., Sun R., **Chowdhary G.**, Dixon W.Distributed State Estimation with Deep Neural Networks for Uncertain Nonlinear Systems under Event-Triggered Communication, **IEEE Transactions on Automatic Control** (**TAC**), vol. 68, no. 5, pp. 3107-3114 May 2023

56. Estêvão Serafim Calera, Gabriel Correa de Oliveira, Gabriel Lima Araujo, Jorge Id Facuri Filho, Lucas Toschi, Andre Carmona Hernandes, Andres Eduardo Baquero Velasquez, Mateus Valverde Gasparino, **Girish Chowdhary**, Vitor Akihiro Hisano Higuti, Marcelo Becker, Under-Canopy Navigation for an Agricultural Rover Based on Image Data, Journal of Intelligent and Robotics Systems (JIRS), vol. 108, no. 2, ,pp 29, June 2023.
57. Wu, J., Ackerman, A., Gaire, R., **Chowdhary, G.**, & Rutkoski, J. A neural network for phenotyping *Fusarium*-damaged kernels (FDKs) in wheat and its impact on genomic selection accuracy. The **Plant Phenome Journa**l, 6, 1– 14, March 2023.
58. Valenzuela Jose Curan, Gasprino Mateus, Uppalpati Naveen, Narenthiran Arun, Wasserman Justin, Ali Huzaifa, Adve Sarita, **Chowdhary Girish**, Under-Canopy Dataset for Advancing Simultaneous Localization and Mapping in Agricultural Robotics, **International Journal of Robotics Research** (**IJRR**), Vol. 43, no. 46, Nov 2023.
59. Schreiber Andre, Sivakumar Arun Narenthiran, Du Peter, Valverde Gasparino Mateus, **Chowdhary Girish**, Driggs-Campbell, Katherine, W-RIZZ: A Weakly-Supervised Framework for Relative Traversability Estimation in Mobile Robotics, **Robotics and Automation Letters** (**R-AL)**, vol. 9, no. 6, pp. 5623-5630, June 2024.
60. Gummadi Shreya, Gasparino Mateus, Vashisht Deepak, **Chowdhary Girish**, Fed-EC: Bandwidth-Efficient Clustering-Based Federated Learning For Autonomous Visual Robot Navigation, Robotics and Automation Letters (R-AL), accepted October 2024
61. Mishra Prabhat, Gasparino Mateus, **Chowdhary Girish,** Deep Model Predictive Control with Stability Guarantees, **IEEE Transactions on Automatic Control (TAC),** accepted October 2024
62. Akcal Ugur, Raikov Ivan, Gribkova Ekatrina, Choudhuri Anwesa, Kim Seung Hyun, Gazzola Mattia, Gillette Rhanor, Soltesz Ivan, **Chowdhary Girish**, Localizing convolutional spikin neural network for fast visual place recognition, Frontiers in Neurorobotics, accepted December 2024.

D. Peer-Reviewed Conference Papers and Presentations (including Top-Tier conferences)

1. Danapalasingam A. K., Cour-Harbo A., **Chowdhary G.**, Bisgaard A., A Robust Stabilization using State Feedback with Feedforward, American Control Conference (**ACC**), MD, USA 2010.
2. **Chowdhary G.**, Johnson E., Recursively Updated Least Squares Based Modification Term for Adaptive Control, American Control Conference (**ACC**), MD, USA 2010.
3. **Chowdhary G.**, Johnson E., Least Squares Based Modification for Adaptive Control, IEEE Conference on Decision and Control (**CDC**), GA, USA 2010.
4. **Chowdhary G.**, Johnson E., Concurrent Learning for Convergence in Adaptive Control without Persistency of Excitation, IEEE Conference on Decision and Control (**CDC**), GA, USA 2010.
5. **Chowdhary G.,** Johnson E., Adaptive Flight Control with Guaranteed Convergence, CEAS **EuroGNC**, Munich, Germany 2011.
6. **Chowdhary G.**, Johnson E., A Singular Value Maximizing Data Recording Algorithm for Concurrent Learning, American Control Conference (**ACC**), CA, USA 2011, winner of best presentation in session award.
7. **Chowdhary G.**, Egerstedt M., Johnson E., Network Discovery: An Estimation Based Approach, American Control Conference (**ACC**), CA, USA 2011, winner of best presentation in session award.
8. Kingravi H., **Chowdhary G.**, Vela P., Johnson E., A Reproducing Kernel Hilbert Space Approach for the Online Update of Radial Bases in Neuro-Adaptive Control, IEEE Conference on Decision and Control (**CDC**), FL 2011.
9. Pravitra C., **Chowdhary G.**, Johnson E., A Compact Exploration Strategy for Indoor Flight Vehicle, IEEE Conference on Decision and Control (**CDC**), FL 2011.
10. Üre N. K., **Chowdhary G.**, Redding J., Toskoz T., How J., Vavrina M., Vian J., Experimental Demonstration of Efficient Multi-Agent Learning and Planning for Persistent

Missions in Uncertain Environments, AIAA Guidance Navigation and Control Conference (GNC), MN 2012, *winner of best paper* of **AIAA GNC** 2012 out of over 600 papers.

11. *Üre N. K.*, Geramifard A., **Chowdhary G.**, How J., Adaptive Planning for Markov Decision Processes with Uncertain Transition Models via Incremental Feature Dependency Discovery, European Conference on Machine Learning (**ECML**), Bristol, UK 2012. *Acceptance rate < 25%*.
12. Mu B., **Chowdhary G.**, How J. P., Efficient Distributed Sensing using Adaptive Censoring Based Inference, IEEE American Control Conference (**ACC**), DC 2013.
13. *De La Torre G.*, **Chowdhary G.**, Johnson E. N., Concurrent Learning Adaptive Control of Linear Switched Systems, IEEE American Control Conference (**ACC**), DC 2013.
14. **Chowdhary G.**, Kingravi H., How J. P., Vela P. A., Nonparametric Adaptive Control of Time-Varying Systems using Gaussian Processes, IEEE American Control Conference (**ACC**), DC 2013.
15. **Chowdhary G.**, Wu T., Cutler M., How J. P., Rapid Transfer of Controllers Between UAVs using Learning Based Adaptive Control, IEEE International Conference on Robotics and Automation (**ICRA**), Germany 2013.
16. **Chowdhary G.**, Muhlegg M., How J. P., Holzapfel F., Concurrent Learning Adaptive Model Predictive Control, European Guidance, Navigation, and Control Conference (**E-GNC**), Netherlands 2013.
17. *Üre N. K.*, **Chowdhary G.**, How J. P., Vavrina M., Vian J., Health Aware Planning Under Uncertainty for UAV Missions with Heterogeneous Teams, IEEE European Control Conference (**ECC**), Switzerland 2013.
18. *Ure N. K.*, **Chowdhary G.**, Chen Y. F., How J. P., Vian J., Decentralized Learning and Planning for Multiagent Missions in Presence of Actuator Failures, International Conference on Unmanned Aircraft Systems (**ICUAS**), GA, May 2013.
19. Amato C., **Chowdhary G.**, Geramifard A., Ure N. K., Kochenderfer M. J., Decentralized Control of Partially Observable Markov Decisions Processes, IEEE Conference on Decisions and Control (**CDC**), Firenze, Italy, December 2013.
20. Grande R., **Chowdhary G.**, How J. P., Nonparametric Adaptive Control using Gaussian Processes with Online Hyperparameter Estimation, IEEE Conference on Decisions and Control (**CDC**), Firenze, Italy, December 2013.
21. **Chowdhary G.**, *Muhlegg M.*, How J. P., Holzapfel F., A Concurrent Learning Adaptive-Optimal Architecture for Nonlinear Systems, IEEE Conference on Decisions and Control (**CDC**), Firenze, Italy, December 2013.
22. **Chowdhary G.**, Kingravi H., How J. P., Patricio V., A Bayesian Nonparametric Approach to Adaptive Control using Gaussian Processes, IEEE Conference on Decisions and Control (**CDC**), Firenze, Italy, December 2013.
23. Ure N. K., Chen Y. F., **Chowdhary G.**, How J. P., Vian J., Planning for Large-Scale Multiagent Problems via Hierarchical Decomposition with Applications to UAV Health Management, American Control Conference (**ACC**), OR, June 2014.
24. Allamaraju R., Kingravi H., Axelrod A., **Chowdhary G.**, Grande R., How J. P., Crick C., Sheng W., Human Aware Path Planning in Urban Environments with Nonstationary MDPs, IEEE International Conference on Robotics and Automation (**ICRA**), Hong-Kong China, May 2014.
25. Abdollahi A., Allamaraju R., **Chowdhary G.**, Adaptive Optimal Control of Nonstationary Dynamical Systems, European Guidance Navigation and Control conference (**E-GNC**), Tolouse, France, 2015.
26. Reish, B., **Chowdhary G.**, Concurrent Learning Adaptive Control for Systems with Unknown Sign of Control Effectiveness, IEEE Conference on Decision and Control (**CDC**), CA, Dec 2015.
27. Peterson, J. D., Yucelen T., Kannan K., **Chowdhary G.**, Exploitation of Heterogeneity in Distributed Sensing: An Active-Passive Networked Multiagent Systems Approach, American Control Conference (**ACC**), IL 2015.
28. *Quindlen J.*, **Chowdhary G.**, How J., Hybrid Model Reference Adaptive Control for Unmatched Uncertainties, American Control Conference (**ACC**), IL 2015.

29. Axelrod A., Kingravi H., **Chowdhary G.**, Gaussian Process based Subsumption of Parasitic Control, American Control Conference (**ACC**), IL 2015.
30. Axelrod A., **Chowdhary G.**, Karaman S., Exploitation by informed exploration between isolated operatives for information theoretic data harvesting, IEEE Conference on decision and control (**CDC**), Osaka, Japan, Dec 2015.
31. Kingravi H., Maske H., Chowdhary G., Kernel Controllers: A Systems Theoretic Approach for Modeling and Control of Spatiotemporally Evolving Processes, IEEE Conference on decision and control (**CDC**), Osaka, Japan, Dec 2015.
32. Quindlen J., Topcu U., How J. P., **Chowdhary G.**, Region of Convergence Estimation for Learning based Adaptive Controllers, American Control Conference (**ACC**), Boston MA, May 2015.
33. Muehlegg M., **Chowdhary G.**, Holzapfel F., State Monitoring of Systems Augmented by Model Reference Adaptive Control using Analytic Time-Series Forecasting, 24th Mediterranean Conference on Control and Automation, Athens Greece, June 2016.
34. Maske H., **Chowdhary G.**, Pagilla P., Intent Aware Shared Control in Off-Nominal Situations, Conference on Decision and Controls (**CDC**), Las Vegas, NV, Dec 2016.
35. Axelrod A., Carlone L., **Chowdhary G.**, Karaman S., Data-driven Prediction of EVAR with Confidence in Time-varying Datasets, Conference on Decision and Controls (**CDC**), Las Vegas, NV, Dec 2016.
36. Kingravi H., Maske H., **Chowdhary G.**, Kernel Observers: Systems-Theoretic Modeling and Inference of Spatiotemporally Varying Processes, Neural Information Processing Systems (**NeurIPS**), Barcelona, Spain Dec 2016, *acceptance rate 22.5%*.
37. Osipychev D., Duy T., Sheng W., **Chowdhary G.**, Human Intention based Collision Avoidance for Autonomous Cars, American Control Conference, Seattle WA, May 2017.
38. Seiferth D., **Chowdhary G.**, *Muhlegg M.*, Holzapfel F., Online Gaussian Process Regression with Non-Gaussian Likelihood, American Control Conference (**ACC**), Seattle WA, May 2017.
39. Allamaraju R., **Chowdhary G.**, Communication Efficient Decentralized Gaussian Process Fusion for Multi-UAS Path Planning, American Control Conference (**ACC**), Seattle WA, May 2017.
40. Allain M., Konduri S., Maske H., Pagilla P., **Chowdhary G.**, Blended Shared Control of a Hydraulic Excavator, 20th International Federation of Automatic Control (**IFAC**) World Congress, France, July 2017.
41. Whitman J., **Chowdhary G.**, Learning Dynamics Across Similar Spatiotemporally Evolving Systems, Conference on Robot Learning (**CORL**), San Jose, CA, Nov 2017, accepted for long-talk, *long-talk acceptance rate 10%.*
42. Maske H., Kingravi H., **Chowdhary G.**, Sensor Selection via Observability Analysis in Feature Space, American Control Conference (**ACC**), WI, 2018.
43. *Quindlen J.*, Topcu U., **Chowdhary G.**, How J. P., Closed-Loop Statistical Verification of Stochastic Nonlinear Systems Subject to Parametric Uncertainties, American Control Conference (**ACC**), WI, 2018.
44. *Quindlen J.*, Topcu U., **Chowdhary G.**, How J. P., Active Sampling for Closed-Loop Statistical Verification of Uncertain Nonlinear Systems, American Control Conference (**ACC**), WI, 2018.
45. Maske H., **Chowdhary G.**, *Kieson E.*, Abramson C., Learning Instructional Policy to Teach Construction Task, International Conference on Robotics and Automation (**ICRA**), Brisbane, Australia, June 2018.
46. Joshi G., **Chowdhary G.**, Cross-Domain Transfer in Reinforcement Learning using Target Apprentice, International Conference on Robotics and Automation (**ICRA**), Brisbane, Australia, June 2018.
47. Kayacan E., Zhongzhong Z., **Chowdhary G.**, Embedded High Precision Control and Corn Stand Counting Algorithms for an Ultra-Compact 3D Printed Field Robot, Robotics Science and Systems (**RSS**), Pittsburg, PA, June 2018, *acceptance rate 31%*. **Winner of best systems paper award**.

48. McAllistar W., Osipychev D., **Chowdhary G.**, Davis A., Multi-Agent Planning for Coordinated Robotic Weed Killing, IEEE/RSJ International Conference on Intelligent Robots and Systems (**IROS**), Madrid, Spain, Sept 2018.
49. Zongyao J., Pagilla P., Maske H., **Chowdhary G.**, Task Learning, Intent Prediction, and Blended Shared Control of a Hydraulic Excavator, IEEE Conference on Decision and Control (**CDC**), Miami, FL, Dec 2018.
50. Maske H., **Chowdhary G.**, Likelihood Rate based Estimation of Nonstationary Markov Models, IEEE Conference on Decision and Control (**CDC**), Miami, FL, Dec 2018.
51. Joshi G., **Chowdhary G.**, Adaptive Control using Gaussian-Process with Model Reference Generative Network, IEEE Conference on Decision and Control (**CDC**), Miami, FL, Dec 2018.
52. Satheeshbabu S., *Uppalpati N. K.*, **Chowdhary G.**, Krishnan G. Open loop position control of soft continuum arms using deep reinforcement learning, , International Conference on Robotics and Automation (**ICRA**), Montreal, CA, May 2019.
53. Madhusudhan. M., **Chowdhary G.**, Deep SRGM, Sequence Classification and Ranking in Indian Classical Music via Deep Learning, International Society of Music Information Retrieval (**ISMIR**), Delft, Nethelands, Sept 2019.
54. Joshi G., Chowdhary G., Deep Model Reference Adaptive Control, IEEE Conference on Decision and Control (**CDC**), Nice FR, Dec 2019.
55. Van Stralen N., Seung Huyn K., Tran H., **Chowdhary G.**, Evaluating Adaptive Performance of Hierarchical Deep Reinforcement Learning, IEEE International Conference on Robotics and Automation (**ICRA**), Paris Fr, May 2020.
56. Uppalpati N., Havens A., Walt B., Chowdhary G., Krishnan G., A Berry Picking Robot With A Hybrid Soft-Rigid Arm: Design and Task Space Control, Robotics Science and Systems (**RSS**), Oregon State University (held online due to COVID-19), OR, July 2020. *Average acceptance rate 28.6%.*
57. McAllistar W., Whitman J., Axelrod A., Varghese J., Davis A., Chowdhary G., Agbots 2.0: Weeding Denser Fields with Fewer Robots, Robotics Science and Systems (**RSS**), Oregon State University (held online due to COVID-19), OR, July 2020. *Average acceptance rate 28.6%.*
58. Joshi Girish, Virdi Jasvir, **Chowdhary G.**, Asynchronous Deep Model Reference Adaptive Control, Conference on Robot Learning (**CORL**), Massachusetts Institute of Technology (held online due to COVID-19), MA, Nov 2020. *Average acceptance rate 34%.*
59. Ji Tianchen, Vuppala Sri, **Chowdhary G.**, Driggs-Campbell K., Multi-Modal Anomaly Detection for Unstructured and Uncertain Environments, Conference on Robot Learning (**CORL**), Massachusetts Institute of Technology (held online due to COVID-19), MA, Nov 2020. *Average acceptance rate 34%.*
60. Borkar Aseem V, **Chowdhary G.**, Multi-Agent Aerial Monitoring of Moving Convoys using Elliptical Orbits, International Conference on Robotics and Automation (**ICRA**), XiAn China and online, June 2021.
61. Havens Aaron, **Chowdhary G.**, Forced Variational Integrator Networks for Prediction and Control of Mechanical Systems, Learning for Decision and Control (**L4DC**), ETH Zurich, Switzerland, June 2021.
62. Narenthiran A., Modi S., Valverde Mateus, Baquero Andres, Ellis Che, **Chowdhary G.,** Gupta S., Learned Visual Navigation for Under-Canopy Agricultural Robots, Robotics Science and Systems (**RSS**), July 2021
63. Cui Hang, Wu Junzhe, Zhang Jiaming, **Chowdhary G.**, Norris W., 3D Detection and Tracking for On-road Vehicles with a Monovision Camera and Dual Low-cost 4D mmWave Radars, IEEE International Intelligent Transportation Systems Conference (**ITSC**), 2021
64. Choudhuri A., **Chowdhary G.**, Schwing A., Structured Prediction on Top-K Assignments for Multi-Object Tracking and Segmentation, International Conference on Computer Vision (**ICCV**), virtual due to COVID-19, 2021, acceptance rate 25.9%
65. Joshi G., **Chowdhary G.**, Stochastic Deep Model Reference Adaptive Control, IEEE Conference on Decision and Control (**CDC**), Austin TX, December 2021

66. Kim S. H., Van Stralen N., **Chowdhary G.**, Tran H. , Disentangling Successor Features for Coordination in Multi-agent Reinforcement Learning, International Conference on Autonomous Agents and Multi-Agent Systems (**AAMAS**-2022), accepted as full paper, held virtual due to COVID-19, 2022, acceptance rate 26% for full papers.
67. Tianchen J., Sivakumar A. N., **Chowdhary G.**, Driggs-Campbell K., Proactive Anomaly Detection for Robot Navigation with Multi-Sensor Fusion, Jointly published in Robotics and Automation Letters, and International Conference on Robotics and Automation (**ICRA**), PA, May 2022.
68. Choi J. W., Borkar A., Singer A., **Chowdhary G.**, Broadband Acoustic Communication Aided Underwater Inertial Navigation, Jointly published in Robotics and Automation Letters, and International Conference on Robotics and Automation (**ICRA**), PA, May 2022.
69. Kamtikar S., Marri S., Walt B., Uppalapati K. N., Krishnan G., **Chowdhary G.**, Visual Servoing for Pose Control of Soft Continuum Arm in a Structured Environment, Jointly published in Robotics and Automation Letters, and IEEE 5th International Conference on Soft Robotics (**RoboSoft**), Edinburgh, Scotland, UK, April 2022.
70. Gasparino M., Narenthiran A., Liu Y., Velasquez A., Higuti A., Rogers J. III, Tran H. T., **Chowdhary G.**, WayFAST: Traversability Predictive Navigation for Field Robots, R-AL joint with **IROS** 2022
71. Wasserman J., Yadav K., **Chowdhary G.**, Gupta Abhinav, Jain Unnat, Last Mile Embodied Visual Navigation, Conference on Robot Learning (**CORL**), Auckland NZ, Dec. 2022
72. Mateus Valverde Gasparino, Vitor Akihiro Hisano Higuti, Arun Narenthiran Sivakumar, Andres Eduardo Baquero Velasquez, Marcelo Becker, **Chowdhary G.,** CropNav: A Framework for Autonomous Navigation in Real Farms, in IEEE International Conference on Robotics and Automation (**ICRA**), London, UK, June 2023
73. Choudhari A., **Chowdhary G.**, Schwing A., Context-Aware Relative Object Queries to Unify Video Instance and Panoptic Segmentation, in IEEE Conference on Computer Vision and Pattern Recognition (**CVPR**), Vancouver, CA, June 2023
74. Yifan Zhao, Hashim Sharif, Peter Pao-Huang, Vatsin Shah, Arun Narenthiran Sivakumar, Mateus Valverde Gasparino, Mahmoud A., Zhao N., Adve S., **Girish Chowdhary**, Misailovic S., Adve V.. 2023. ApproxCaliper: A Programmable Framework for Application-aware Neural Network Optimization, Sixth Conference on Machine Learning and Systems (**MLSys**), Miami, Florida, June 2023.
75. Wang Q., Li M., Chan Pong Hou, Huang L., Hockenmaier J., Ji Heng, **Chowdhary G.**, Multimedia Generative Script Learning for Task Planning, 61st Annual Meeting of the Association of Computational Linguistics (**ACL**) 2023, Toronto Canada, July 2023.
76. Gaparino M., Mishra P., **Chowdhary G.**, Learning Based Model Predictive Control with Deep Neural Network, IEEE Conference on Decision and Control (**CDC**), Singapore, 2023
77. Gasparino M., Sivakumar A., **Chowdhary G.**, WayFASTER: a Self-Supervised Traversability Prediction for Increased Navigation Awareness, International Conference on Robotics and Automation (**ICRA**), Yokohoma, Japan, May 2024.
78. Wasserman Justin, **Chowdhary Girish**, Gupta Abhinav, Jain Unnat, Exploitation-Guided Exploration for Semantic Embodied Navigation, International Conference on Robotics and Automation (**ICRA**), Yokohoma, Japan, May 2024.
79. Arun Narenthiran Sivakumar, Mateus Valverde Gasparino, Michael McGuire, Akihiro Higuti, Ugur Ackal, Girish Chowdhary, Demonstrating CropFollow++: Robust Under-Canopy Navigation with Keypoints, Robotics Science and Systems (**RSS**), acceptance rate 29%, Delft, Netherlands, July 2024, **Finalist for Best Demonstration Track Paper Award**.
80. Jiarui Sun, **Girish Chowdhary**, CoMusion: Towards Consistent Stochastic Human Motion Prediction via Motion Diffusion, European Conference on Computer Vision (**ECCV**), acceptance rate 27.9, Milan, Italy, September 2024.
81. Jiarui Sun, Yujie Fan, Chin-Chia Michael Yeh, Wei Zhang and **Girish Chowdhary**, Revealing the Power of Masked Autoencoders in Traffic Forecasting, 33rd ACM International Conference on Information and Knowledge Management (**CIKM**), acceptance rate 27%, Boise, Idaho, October 2024.

82. Anwesa Choudhuri, **Chowdhary Girish**, Schwing Alex, OW-VISCapTor: Abstractors for Open-World Video Instance Segmentation and Captioning, Neural Information Processing Systems (**NeurIPS**), Vancouver, CA, December 2024.
83. Wasserman Justin, Agarwal Ananye, Jangir Rishabh, **Chowdhary Girish**, Pathak Deepak, Gupta Abhinav, Legolas: Deep Leg-Inertial Odometry, Conference on Robot Learning (**CORL**), Munich, Germany, November 2024, acceptance rate 39.49%.
84. Cuaran Jose, Ahluwalia Kulbir, Koe Kendall, Uppalpati Naveen Kumar, **Girish Chowdhary**, Active Semamtic Mapping with Mobile Manipulators in Horticultural Environments, IEEE International Conference on Robotics and Automation (**ICRA**), Atlanta GA, May 2025

E. Patents

1. **Chowdhary G.**, Johnson E., Oh S. M., USPTO# US 8489528 B2, Systems and methods for training neural networks based on concurrent use of current and recorded data, Patent assigned to Georgia Institute of Technology, Feb 2013.
2. **Chowdhary G.**, Choudhuri A., Zhang Z., Soman C., Kayacan E., Thompson B., OTM Ref: 2017-030-04, PCT/US18/47947, "Apparatus and Method for Agricultural Data Collection and Agricultural Operations" filed Aug 24, 2018.
3. **Chowdhary G.**, Soman C., OTM Ref: 2016-199-02, PCT/US2018/014695 "Adaptive Cyber-Physical System for Efficient Monitoring of Unstructured Environments" filed Jan 22, 2018.
4. Choudhuri A., **Chowdhary G.**, Kayacan E., Soman C., Tompson B., Zhonzhon Z., Apparatus and method for agricultural data collection and agricultural operations, AU2018320964B2, under review
5. **Chowdhary G.**, Soman C., Liu P., McGuire M., Hansen M., Agricultural Analysis Robotic Systems and Methods Thereof, WO2022208219A1, awaiting issuance
6. Chowdhary G., Joshi G., Virdi J., Deep Model Reference Adaptive Controller, 17/354,912, priority date June 22 2021, allowed August 7 2024

F. Papres in regular conferences and conferences requiring only abstract submissions
These conference proceedings require peer review of abstracts or extended abstracts

1. **Chowdhary G.**, Jategaonkar R., Aerodynamic Parameter Estimation from Flight Data applying Extended and Unscented Kalman Filter, AIAA Atmospheric Flight Mechanics (AFM), CO, USA 2006.
2. **Chowdhary G.**, Lorenz S., Control of VTOL UAV via Online Parameter Identification, AIAA Guidance Navigation and Control Conference (GNC), CA, USA 2005.
3. **Chowdhary G.**, Johnson E., Adaptive Neural Network Flight Control using both Current and Stored data, Proc. of AIAA Guidance Navigation and Control Conference (GNC), NC, USA 2007.
4. Kutay A., **Chowdhary G.**, Calise A., Johnson E., A Comparison of Two Novel Direct Adaptive Control Methods under Actuator Failure Accommodation, Proc. of AIAA Guidance Navigation and Control Conference (GNC), HI, USA 2008.
5. **Chowdhary G.**, Johnson E., Theory and Flight Test Validation of Long Term Learning Adaptive Controller, Proc. of AIAA Guidance Navigation and Control Conference (GNC), HI, USA 2008.
6. **Chowdhary G.**, Gadre R., Komerath N., Policy Issues for Retail Beamed Power Transmission, Science and Innovation Policy, GA, USA 2009.
7. **Chowdhary G.**, Sobers M., Christmann C. H., Kimbrell S. M., Johnson E., Georgia Tech Aerial Robotics Team: 2009 International Aerial Robotics Competition Entry, First Symposium on Indoor Flight Issues, University of Puerto Rico Mayagüez, PR, USA 2009, winner of best paper award.
8. Sobers M., **Chowdhary G.**, Johnson E., Indoor Navigation for Unmanned Aerial Vehicles, Proc. of AIAA Guidance Navigation and Control Conference (GNC), IL, USA 2009.
9. Rooz N., Johnson E., **Chowdhary G.**, and others, Experience with Highly Automated Unmanned Aircraft Performing Complex Missions, Proc. of AIAA Guidance Navigation and Control Conference (GNC), IL, USA 2009.

10. Kimbrell S., Johnson E., **Chowdhary G.**, Calise A., Chandramohan R., A Process to Obtain Robustness Metrics for Adaptive Flight Controllers, AIAA Guidance Navigation and Control Conference (GNC), IL, USA 2009.
11. Debusk W., **Chowdhary G.**, Johnson E., Real-Time System Identification of a Small Multi-Engine Aircraft, AIAA Guidance Navigation and Control Conference (GNC), IL, USA 2009.
12. **Chowdhary G.**, Johnson E., Flight Validation of a Long Term Learning Adaptive Controller, Proc. of AIAA Guidance Navigation and Control Conference (GNC), IL, USA 2009.
13. **Chowdhary G.**, Salaün E., Ottander J., Johnson E., Low Cost Guidance Navigation and Control Solution for Miniature UAV in GPS Denied Environment, First Symposium on Indoor Flight Issues, University of Puerto Rico Mayagüez, PR, USA 2009.
14. **Chowdhary G.**, Srinivasan S., Johnson E., Frequency Domain Method for Real-Time Detection of Oscillations, AIAA Infotech@Aerospace, GA, USA 2010, finalist for best student paper award.
15. **Chowdhary G.**, Komerath N., Innovations Required for Retail Beamed Power Transmission Over Short Range, Proc. of IMETI, FL, USA 2010.
16. **Chowdhary G.**, Sobers M. D., Chintasiddhi P., Hiroyuki H., Kalghatgi R., Ong C., Christmann C. H., Johnson E., Georgia Tech Team Entry for the 2010 AUVSI International Aerial Robotics Competition, Second Symposium on Indoor Flight Issues, University of Puerto Rico Mayagüez, PR, 2010.
17. Chandramohan R., Yucelen T., Calise A., **Chowdhary G.**, Johnson E., Experimental Evaluation of Derivative Free Model Reference Adaptive Control, AIAA Guidance Navigation and Control Conference (GNC), Toronto, Canada 2010.
18. Chandramohan R., Yucelen T., Calise A., **Chowdhary G.**, Johnson E., Flight Test Results for Kalman Filter Modification in Adaptive Control, AIAA Guidance Navigation and Control Conference (GNC), Toronto, Canada 2010.
19. **Chowdhary G.**, Sobers M., Salün E., Ottander J., Johnson E., Design, Development, and Testing of a Low Cost, Fully Autonomous Indoor Unmanned Aerial System, AIAA Guidance Navigation and Control Conference (GNC), Toronto, Canada 2010.
20. **Chowdhary G.**, Johnson E., Concurrent Learning for Improved Parameter Convergence in Adaptive Flight Control, AIAA Guidance Navigation and Control Conference (GNC), Toronto, Canada 2010.
21. Chowdhary G., Johnson E., Kimbrell S., Chandramohan R., Calise A., Flight Test Results of Adaptive Controllers in the Presence of Significant Aircraft Faults, AIAA Guidance Navigation and Control Conference (GNC), Toronto, Canada 2010. Invited Paper.
22. Komerath N., **Chowdhary G.**, Retail Beamed Power for Micro Renewable Energy Architectures: A Survey, Proc. of ISED, Bhubaneswar, India 2010.
23. Johnson E., **Chowdhary G.**, Chandramohan R., Calise A., UAV Flight Control using Flow Control Actuators, AIAA Guidance Navigation and Control Conference (GNC), OR 2011.
24. **Chowdhary G.**, Sobers D. M., Pravitra C., Christmann C., Wu A., Hashimoto H., Ong C., Kalghatgi R., Johnson E., Integrated Guidance Navigation and Control for a Fully Autonomous Indoor UAS, AIAA Guidance Navigation and Control Conference (GNC), OR 2011.
25. **Chowdhary G.**, Johnson E., Lyapunov-based Integration of a Data Recording Algorithm in Adaptive Control, AIAA Guidance Navigation and Control Conference (GNC), OR 2011.
26. Mühlegg M., **Chowdhary G.**, Johnson E. N., Concurrent Learning Adaptive Control of Linear Systems with Noisy Measurements, AIAA Guidance Navigation and Control Conference (GNC) MN, 2012.
27. Campbell T., Ponda S., **Chowdhary G.**, How J., Planning under Uncertainty using Nonparametric Bayesian Models, AIAA Guidance Navigation and Control Conference (GNC), MN 2012.

28. **Chowdhary G.**, Mühlegg M., Üre N. K., Johnson E. N., How J., Experimental Results of Concurrent Learning Adaptive Controllers, AIAA Guidance Navigation and Control Conference (GNC) MN, 2012, Invited Paper.
29. Liu M., **Chowdhary G.**, Carrin L., How J. P., Transfer Learning for Reinforcement Learning with Dependent Dirichlet Process and Gaussian Process, workshop on Bayesian Nonparametric Modeling in Planning and Learning, NIPS Conference, Lake Tahoe NV 2012.
30. **Chowdhary G.**, Kingravi H., Grande R., How J. P., Vela P., Model Reference Adaptive Control using Gaussian Processes, RLDM 2013, Princeton NJ.
31. **Chowdhary G.**, Liu M., Grande R., Walsh T., How J. P., Off-Policy Reinforcement Learning with Gaussian Processes, Reinforcement Learning and Decision Making workshop 2013, Princeton, NJ.
32. Allamaraju R., Kingravi H., Axelrod A., **Chowdhary G.**, Grande R., How J. P., Crick C., Sheng W., Human Aware Path Planning in Urban Environments with Nonstationary MDPs, NIPS Advances in Machine Learning for Sensorimotor Control workshop, Lake Tahoe NV 2013.
33. **Chowdhary G.**, Üre N. K., How J., Kingravi H., Model Reference Adaptive Control using Nonparametric Adaptive Elements, AIAA Guidance Navigation and Control Conference (GNC), MN 2012, Invited Paper.
34. Scheper K., **Chowdhary G.**, Johnson E., Aerodynamic Parameter Identification of a Fixed Wing UAV, AIAA Atmospheric Flight Mechanics Conference (AFM), DC 2013.
35. *Muhlegg M.*, **Chowdhary G.**, Holzapfel F., How J., Adaptive-Optimal Control of Constrained Nonlinear Uncertain Dynamical Systems using Concurrent Learning Model Predictive Control, AIAA Guidance, Navigation, and Control Conference (GNC), MA 2013.
36. Modares H., Lewis F., Naghibi-Sistani M., **Chowdhary G.**, Yucelen T., Adaptive Optimal Control of Partially Constrained-input Systems using Policy Iteration and Experience Replay, AIAA Guidance, Navigation, and Control Conference (GNC), MA 2013.
37. Mu B., **Chowdhary G.**, How J. P., Value-of-Information Aware Active Task Assignment, SPIE Conference on Radar Systems, NJ 2013.
38. Mu B., **Chowdhary G.**, How J. P., Value-of-Information Aware Active Task Assignment, AIAA Guidance, Navigation, and Control Conference (GNC), MA 2013.
39. *Muhlegg M.*, **Chowdhary G.**, Holzapfel, F., Optimizing Reference Commands for Concurrent Learning Adaptive-Optimal Control of Uncertain Dynamical Systems, AIAA Guidance, Navigation, and Control Conference (GNC), MA 2013.
40. **Chowdhary G.**, *Ure N. K.*, How J., Vian J., Concurrent Learning Adaptive Control in Presence of Uncertain Control Allocation Matrix, AIAA Guidance, Navigation, and Control Conference (GNC), MA 2013.
41. **Chowdhary G.**, Kingravi H., How J., Vela P. Nonparametric Adaptive Control using Gaussian Processes, AIAA Guidance, Navigation, and Control Conference (GNC), MA 2013.
42. Osipychev D., Tran D., Sheng W., **Chowdhary G.**, Proactive MDP based Collision Avoidance Algorithms for Autonomous Car, NIPS From Bad Models to Good Policies workshop, Montreal, CA 2014
43. Maske H., Matthews M., Axelrod A., **Chowdhary G.**, Crick C., Pagilla P., Collaborative Goal and Policy Learning from Human Operators of Construction Co-Robots, Neural Information Processing Systems (NIPS) Autonomous Learning Robots workshop, Montreal, CA 2014, winner of student travel award.
44. *Quindlen J.*, **Chowdhary G.**, How J. P., Output Feedback Concurrent Learning Model Reference Adaptive Control, AIAA GNC@SciTech, FL, 2015.
45. Axelrod A., **Chowdhary G.**, Efficiently Informed Exploration between Isolated Operatives for Distributed Systems, AIAA GNC@SciTech, FL, 2015, finalist for best student paper award.

46. Muehlegg M., Holzapfel F., **Chowdhary G.**, Trusting Learning Based Adaptive Flight Control Algorithms, Self-Confidence in Autonomous Systems, AAAI Fall Symposium Series 2015, At Arlington, Virginia, Oct 2015.
47. Roy S., Crick C., Maske H., **Chowdhary G.**, Teaching and learning using semantic labels, IEEE Human Robot Interaction, Breaking Report, Vienna Austria, March 2017.
48. Axelrod A., **Chowdhary G.**, Data-driven Prediction of EVAR with Confidence in Time-varying Datasets, RLDM 2017, Ann Arbor, MI.
49. Pattanaik A., Sui V., Osipychev D., **Chowdhary G.**, Adversarial attacks on deep reinforcement learning, RLDM 2017, Ann Arbor, MI.
50. Joshi G., **Chowdhary G.**, Cross-Domain transfer learning using target apprentice, RLDM 2017, Ann Arbor, MI.
51. Maske H., *Kieson E.*, **Chowdhary G.**, Abramson C., Learning instruction policy from demonstrations, RLDM 2017, Ann Arbor, MI.
52. Whitman J., **Chowdhary G**, Learning Dynamics Across Similar Spatiotemporally Evolving Systems, Reinforcement Learning and Decision Making (RLDM) 2017, Ann Arbor, MI
53. *Quindlen J.*, Topcu U., **Chowdhary G.**, How J., Active Sampling-based Binary Verification of Dynamical Systems, AIAA GNC@SciTech, Kissimmee FL, January 2018. ^
54. Choudhuri A., **Chowdhary G.**, Crop Stem Width Estimation in Highly Cluttered Field Environments, Computer Vision Problems in Plant Phenotyping 2018, Newcastle UK.
55. Choudhuri A., **Chowdhary G.**, Feasibility of Dimension Reduction and Reconstruction of Occluded Plants using Generative Adversarial Networks, AFITA 2018 workshop on phenotyping, Mumbai, India.
56. Whitman J., **Chowdhary G.**, Path Planning for Mobile Inference of Spatiotemporal Systems, NeurIPS workshop on Modeling and Decision Making in the Spatiotemporal Domain, NeurIPS 2018 (previously called NIPS), Montreal, CA.
57. Madhusudhan S. T., **Chowdhary G.**, Tonic Independent Raag Classification in Indian Classical Music, NeurIPS workshop on Modeling and Decision Making in the Spatiotemporal Domain, NeurIPS 2018 (previously called NIPS), Montreal, CA.
58. Guoxiang R., Tao L., Ying Y, **Chowdhary G.**, Ting K. C., Mobile robotics platform for a whole-poultry-house approach to egg production, ASABE annual meeting 2019, Boston, MA.
59. Joshi, G., Virdi J., **Chowdhary G.**, Design and Flight Evaluation of Deep Model Reference Adaptive Controller, AIAA SciTech 2020 Forum, Orlando, FL
60. Koe Kendall, Kamtikar Shivani, Uppalpati Naveen, Krishnan Girish, **Chowdhary Girish**, Visual Servoing for Pose Control of Hybrid Continuum Manipulator in an Unstructured Environment, CORL workshop, Nov 2023
61. Samhita Marri, Arun Narenthiran Sivakumar, Naveen Kumar Uppalapati, **Girish Chowdhary**, PlantTrack: Task-Driven Plant Keypoint Tracking with Zero-Shot Sim2Real Transfer in 40th Anniversary of the IEEE Conference on Robotics and Automation (ICRA@40), Rotterdam-Netherlands, 2024
62. Samhita Marri, Arun Narenthiran Sivakumar, Naveen Kumar Uppalapati, **Girish Chowdhary**, SkeleTree: Multi-View 3D Plant Skeleton Extraction in 40th Anniversary of the IEEE Conference on Robotics and Automation (ICRA@40), Rotterdam-Netherlands, 2024

G. Citations

Google Scholar Profile, summary as of Jan 8, 2025

Cited by		VIEW ALL
	All	Since 2020
Citations	9717	6490
h-index	45	41
i10-index	133	95

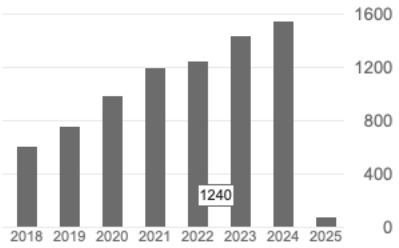

3. RESIDENT INSTRUCTION

A. Summary of Instruction

Courses taught at UIUC

CS 598 Advanced Topics in Mobile Robotics: Taught in Sp 24: *This course was introduced at UIUC by me.* The objective of this graduate course is to take a deep dive into advanced topics in perception, planning, and control for mobile robotics. There is a strong reliance on state-of-the-art results and project-based learning. Course is 4 credits.

CS 498 Mobile Robotics for Computer Scientists: Taught in Fa 21, Fa 22, Fa 23: *This course was introduced at UIUC by me***,** The objective of this course is to prepare CS students in creating AI algorithms and software for mobile robot perception, planning, and control.

ABE 426/ECE 426 Principles of Mobile Robotics: Taught in FA 17, 18 as ABE 498 Principles of Field Robotics, in FA 19 as ABE 424, cross-listed as ABE/ECE 426 in FA 20: *This course was introduced at UIUC by me***,** The objective of this course is to prepare students in designing and automating aerial and ground robots that operate in harsh, uncertain, and changing field environments. Course is 4 credit, approved for lab credit in ABE and ECE.

ABE 526 Autonomous Systems and Robots: Taught as Autonomous Decision Making in the Real World: Spring 17, 18, 19, *This course was introduced at UIUC by me:* The objective of this course is to prepare students in solving real-world problems by understanding and implementing the autonomy triad: perception, reasoning, and control on realistic systems. Course is 4 credit.

Courses taught at Oklahoma State University

MAE 5783: Principles of Autonomous Decision Making, *This course was introduced at OSU by me*: taught in Spring 14, 15, The objective of this course is to cover theory and techniques essential for building cyber-physical systems capable of autonomous decision making in the real-world.

MAE4053-ECEN4413: Automatic Control Systems, taught in Fall 13, 14, 15: This course covers the fundamentals of automatic control systems, starting with frequency response, bode plots, Nyquist plots, and root locus design, and then moving into state space design. The course had an online component and a Tulsa component, where students attended from a special remote-presence room.

Short courses and specialized courses

5 day course on AI for Outdoor Applications: This course is a short version of ABE 524 that is taught in 5 2 hour modules covering the basics of AI, machine learning, reinforcement learning, Kalman filtering, and adaptive control. Its intended at a graduate level to accelerate students working on robotics to get familiarity with advanced topics in autonomy and AI.

Taught at: IIT Kharagpur, Jan 2020

AI foundry for John Deere: This innovative 3 component course is designed to accelerate professional engineers in topics in AI for robotics. The first component is a 2 day intensive course focused on introducing the concepts at high level. The second component is a 4 month deeper dive with homeworks, 3 hours per week of remote instruction time, and 2 days per month of in-person lecture time. The third component is focused on executing a project that involves innovation with AI. Taught: Component 1, Aug 2019, Component 1, Feb 2020, Component 2, Feb – May 2020.

2) Supervision of Graduate Student Research

UIUC MS Students (Primary Advisor)

Name	Dates	Status	Thesis Title	Placement
Aditya Potnis (CS)	8/24 -		TBD: Topics in vision-based perception and planning for mobile manipulators	
Shivani Kamtikar (CS)	1/21 – 12/21	Graduated	Visual servoing for soft berry harvesting robots	UIUC PhD
Corey Davidson (ABE)	1/19 – 5/21	Graduated	Recreating NDVI images from RGB images	Aurora flight sciences
Junzhe Wu (ABE)	8/18 – 5/20	Current	3-D depth estimates with LIDAR and vision	UIUC PhD
Garret Gowan (AE)	2/18 – 5/20	Current	Adaptive control of hypersonic aircraft	Sandia
Anwesa Choudhuri (ECE)	8/17 – 8/19	Graduated	Autonomous robotic system for high throughput plant phenotyping (width estimation) in agricultural fields	UIUC PhD
Jasvir Virdi (AE)	8/18 – 5/20	Current	Adaptive control of unmanned aircraft	Industry
Beau Barber (ABE)	08/16 – 05/19	Graduated	Adaptive On-Site UAS based monitoring of large farms	UIUC PhD
Karan Chawla (ECE)	08/17 – 05/18	Graduated	Full Season Navigation and Control of Ultracompact Autonomous Agbot in GPS Denied Environment	SkyRyse Inc., CA
Wyatt McAllister (ECE)	4/17 – 5/18	Graduated	Multi-Agent Planning fo Coordinated Robotic Weeding	UIUC PhD
Sathwik Madhusudhan Tejaswi (ISE)	5/17 – 5/19	Graduated	Deep learning for tonic independent classification of Indian Classical Music	Schneider National, WI
Hunter Young (ABE)	6/16 – 5/19	Graduated	ROS-GAZEBO Farm Simulation Environment for Development of an Ultra Compact Autonomous Robot	Intelligent Automation Inc., MD
Tianhao Wu (ABE)	6/17 – 12/19	Current	Reinforcement learning for control of weeding arms	
Lukas Renker	1/18 –	Did not complete	End of row detection for agbots	Did not complete

OSU MS Students (Primary Advisor)

Sri Theja Vuppala	08/14 -04/16	Graduated (OSU)	Implementation and Validation of Gaussian Process Model Reference	UIUC Research Engineer

			Adaptive Control for Fixed Wing Unmanned Aerial Systems	
Allan Axelrod	08/13 – 05/15	Graduated (OSU)	Learning to exploit time-varying heterogeneity in distributed sensing using the information exposure rate	UIUC PhD
Abdollahi Ali	08/14 – 06/16	Graduated (OSU)	Adaptive Multi-Objective Optimizing Flight Controller	Infinite8, Iran (startup)
Allamaraju Rakshit	01/13 – 12/15	Graduated (OSU)	Communication efficient decentralized sensor fusion in sensor networks	Unmanned Systems Research Institute (Stillwater OK)
Jaydeep Pabbisetty	01/13 – 12/14	Graduated (OSU)	Improving Navigation through Cooperation and Path Planning	Industry
Jacob Stockton	01/13 – 12/14	Graduated (OSU)	Modular Autopilot Design featuring Bayesian Non-Parametric Adaptive Control	Williams Companies, OK
Benjamin Reish	01/13 – 05/15	Graduated (OSU)	Concurrent Learning in Presence of Uncertain Input Allocation	OSU PhD

UIUC Ph.D. Students (primary advisor)

Name	Dates	Status	Thesis Title	Placement	Department
Shivani Kamtikar (CS)	8/22	Current	Perception and control of soft robotic arms		CS
Shreya (Guna) Gummadi (CS)	8/21 -	Current	Federated learening for robot navigation		CS
Jose Currano (CS)	8/21 -	Current	SLAM in field settings		CS
Kendall Koe (CS)	8/21 -	Current	Robotic teams on an insect search and destroy mission in Soybean fields		CS
Kulbir Singh (CS)	8/21-	Current	Natural language programming for field robots		CS
Mateus Valverde Gasparino (CS)	1/20 -	Current	Traversibility determination for autonomous field navigation		CS
Arun Sivkumar (CS)	8/19	Current	Visual navigation in agricultural fields		CS
Anwesa Choudhuri (ECE)	8/19 -	Current	Object Understanding in Generalized Video Segmentation	United Imaging intelligence	ECE
Ugur Akcal (AE)	8/19 -	Current	Neuromorphic computing for robotics		AE

Jiarui Sun (ECE)	1/20 -	Current	Bioinspired learning and control in soft bodied creatures		ECE
Justin Wasserman (ECE)	8/19 -	Current	Last-mile navigation		ECE
Wyatt Mcallistar (ECE)	8/18 – 5/20	Graduated	Models and Algorithms for Autonomous Weeding with Small Agbots	HRI Inc.	ECE
Harshal Maske (ABE)	8/14 – 8/18	Graduated	Learning Inference and Control for Construction Robots and Spatiotemporal Processes	Ford, MI	ABE
Girish Joshi (AE)	8/15 – 5/20	Graduated	Transfer Learning for Reinforcement Learning Domains	Mathworks	AE
Joshua Whitman (MechSci)	8/16 -	Graduated	Learning, Control, and Estimation in Feature Spaces of Machine Learning Models	UIUC teaching faculty	MechSci

Post-Doctoral Associates (primary advisor)

Name	**Dates**	**Research Area**	**Current position**
Hassan Kingravi	8/14 – 8/15	Machine learning	Equifax, Principal data scientist, GA
Erkan Kayacan	11/16 - 2/18	Robotics	University of Oklahoma, Assistant Professor
Aseem Borkar	8/19 – 8/21	Robotics	Newspace Technologies, Design Engineer
Andres Baqueros	3/19 – 7/22	Robotics	EarthSense inc., Autonomy Lead
Prabhat Mishra	6/19 – 2/23	Decision and Control Theory	IIT Kharagpur, Assitant Professor

4. SERVICE (PUBLIC, PROFESSIONAL/DISCIPLINARY, AND UNIVERSITY)

1) Technology Commercialization

Co-founder of EarthSense INC (www.earthsense.co): Commercialization of UIUC technology and economic development. EarthSense is also UIUC ARPA-E TERRA-MEPP project's official and required commercialization partner. EarthSense provides high-throughput phenotyping robots that are revolutionizing breeding, and over time, high-yield agriculture. EarthSense has raised over 1M in venture funds, won 2 SBIR Phase I awards and 1 SBIR Phase 2 award and is revenue positive. EarthSense currently employs over 10 full time, and several part-time employees.

2) Service to Disciplinary and Professional Societies or Associations

IEEE: **Senior Member**, serving as associate editor, reviewer, conference session chair, member of technical committees: Control and Decisions, Robotics and Automation

AIAA: **Associate Fellow**, serving as a reviewer, conference session chair, guest editor, member of technical committees: Guidance Navigation and Control, Intelligent Systems

ASABE: **Member**, involved in the joint IFAC (International Federation of Automatic Control)-ASABE committee on control in agriculture

ACM: **Member**

Workshops organized for professional societies

1. **Workshop on Agricultural Robotics for a Sustainable Future**, with Naveen Uppalpati, Arun Narenthiran, Anand Kumar Mishra, Marija Popovic, Robert Shepherd, IROS 2023
2. **AI for Agriculture and Food Systems (AIAFS)**, with Aline Zare, Baskar Ganapathysubramanian, George Kantor, Katia Sycara, Koushik Nagasubramanian, Sierra Youn, Soumik Sarkar, and Soumyashree Karr, AAAI 2022
3. **Modeling and Decision Making in the Spatiotemporal Domain**, with Ransalu Senanayake (lead), Neal Jeans, and Fabio Ramos at the Neural Information Processing Systems (NeurIPS, previously known as NIPS) 2018, Montreal, CA.
4. **What's the Big Deal with Deep Learning**, **Girish Chowdhary (lead)**, Hassan Kingravi, Alex Schwing, Chinmay Soman, workshop at the IEEE Conference on Decision and Control (CDC), 2017 Melbourne, Australia.
5. **Collaborative Sensing, Learning, and Control in Human-Machine Systems**, Soumik Sarkar (lead), Nisar Ahmed, **Girish Chowdhary**, Workshop at the American Control Conference, 2016, Chicago IL.
6. **Intelligent Planning and Control: Bringing together Adaptive Control and Reinforcement Learning for Guaranteeing Optimal Performance and Robustness**, **Girish Chowdhary (lead)**, Tansel Yucelen, Frank Lewis, Warren Dixon, Lucian Businou, workshop at the IEEE Conference on Decision and Control, 2013, Florence Italy.
7. **Recent Advances in Model Reference Adaptive Control: Theory and Applications**, **Girish Chowdhary**, Tansel Yucelen, Preconference short-course, AIAA Guidance, Navigation, and Control Conference, Minneapolis, MN 2012.
8. **Recent Advances in Model Reference Adaptive Control: Theory and Applications**, **Girish Chowdhary**, Tansel Yucelen, Eric Johnson, workshop at the IEEE Conference on Decision and Control, 2011, Orlando FL.

3) University/Campus Service

Colleges and Campus UIUC

1. Director: **USDA/NIFA Farm of the Future**: Since 2022, a cross-campus research testbed for digital agriculture
2. Chief Scientist: **Illinois Autonomous Farm**: Since 2020, a testbed for autonomy research
3. **Grainger College of Engineering Research Growth and Diversification Strategic Planning Workgroup**: Workgroup member since February 22nd
4. **UIUC Center for Digital Agriculture**: Steering committee member since March 2018
5. **UIUC Center for Autonomy**: Key member advising activities in the center
6. **CSL Integrated Robotics Lab (IRL)**: Steering committee member since September 2017
7. **OTM Advisory Committee**: Committee member since December 2018
8. **UIUC Spicmacay Registered Student Organization**: Spicmacay works to promote Indian classical music and culture on campus, co-advisor of Spicmacay
9. **Department of Crop Science hiring committee**: Tenure track positions in digital agriculture

Department (UIUC)

1. **CS Hiring committee sub-chair for AI**: Fall 2022, Spring 2023
2. **CS hiring committee member**: Fall 2021
3. **CS Graduate Study committee**: Spring, 2021, Fall 2023
4. **CS Admissions committee**: Spring 2020
5. **ABE Department Head Search Committee**: Committee member since 2018
6. **Learning Outcomes and Assessment Plan Committee**: Committee member since 2016
7. **ABE Graduate Committee**: Committee member since 2017
8. **ABE Course and Curricula Committee**: Committee member since 2017

Department (OSU)

9. **MAE hiring committee**: Tenure track assistant professor in fluid dynamics

10. **MAE hiring committee**: Tenure track assistant professor in control systems

11. **US PERSON STATUS**

    US Citizen

12. **COVERAGE IN POPULAR MEDIA (SELECT ARTICLES)**
    1. Researchers at U of I Lead Multimillion Dollar Futuristic Farm Project, anon. **News India Times,** June 17 2022
    2. Farming Drives Towars Precision Agriculture Technologies, Tom Johnson, **WIRED**, May 14 2022
    3. 'Farms are Going to Need Different Kinds of Robots', Bernd Debusman Jr., **BBC News**, March 2021
    4. Toy Sized Tractor Drones Aim to Inspect Crops, Plant Covers, anon., No-Till Farmer
    5. A Growing Presence on the Farm: Robots, Knvul Sheikh, **The New York Times**, February 2020
    6. Swarms of Teeny Robot-Tractors Will Outmaneuver Tesla's Driverless Cars, Sarah Kessler, **OneZero**, January 2020
    7. Follow that Furrow, Rory Jackson, **Unmanned Systems Technology Magazine**, March 2019
    8. What Will Tomorrow's Ag Workers and Farmers Look Like, Fran Howard, **Agripulse**, Feb 2019
    9. 8 Agtech Startups Worth Watching in 2019, Laurie Bedord, **Successful Farming**, January 2019
    10. Bots on the Ground, Shauna Rumbaugh, **High Plains Journal**, Oct 2019
    11. This Self-Driving Robot from U of I Could Shape the Future of Farming, Robert Holly, **Chicago Tribune**, April 2017
    12. Cross a John Deere with Roomba, and You Get this Crop-Monitoring Robot, Dyllan Furness, **Digital Trends**, March 2018