US006716103B1

(12) **United States Patent**
Eck et al.

(10) **Patent No.: US 6,716,103 B1**
(45) **Date of Patent: Apr. 6, 2004**

(54) **PORTABLE GAME MACHINE**

(75) Inventors: **Charles P. Eck**, Sammamish, WA (US); **Hiroshi Kamada**, Kyoto (JP); **Claude Comair**, Bellevue, WA (US)

(73) Assignee: **Nintendo Co., Ltd.**, Kyoto (JP)

(*) Notice: Subject to any disclaimer, the term of this patent is extended or adjusted under 35 U.S.C. 154(b) by 0 days.

(21) Appl. No.: **09/659,738**

(22) Filed: **Sep. 11, 2000**

Related U.S. Application Data

(60) Provisional application No. 60/158,045, filed on Oct. 7, 1999.

(51) **Int. Cl.**[7] **A63F 13/00**

(52) **U.S. Cl.** **463/45**; 463/40; 463/44

(58) **Field of Search** ..... 463/44, 43, 45, 463/40–42, 39, 36, 1, 46, 47; 273/148 B; 396/29, 297, 426, 439; 348/49, 61, 73, 906, 909; 379/215, 93.35, 209, 283

(56) **References Cited**

U.S. PATENT DOCUMENTS

5,376,931 A	*	12/1994	Marrs	340/7.55
5,387,904 A		2/1995	Takada	340/825.44
5,429,363 A		7/1995	Hayashi	273/148 B
5,510,778 A		4/1996	Krieter et al.	340/825.44
5,538,255 A		7/1996	Barker	463/41
5,618,045 A		4/1997	Kagan et al.	463/40
5,624,316 A		4/1997	Roskowski et al.	463/45
5,651,060 A	*	7/1997	Cohn et al.	463/41
5,733,131 A		3/1998	Park	434/307 R
5,738,583 A		4/1998	Comas et al.	463/40
5,761,485 A		6/1998	Munyan	395/500
5,809,415 A	*	9/1998	Rossmann	340/7.21
5,812,930 A		9/1998	Zavrel	455/5.1
5,889,473 A		3/1999	Wicks	340/825.44
5,941,775 A		8/1999	Naka et al.	463/44
5,942,969 A		8/1999	Wicks	340/286.02
5,971,397 A		10/1999	Miguel et al.	273/371
5,999,808 A	*	12/1999	LaDue	463/25
6,120,379 A	*	9/2000	Tanaka et al.	463/44

FOREIGN PATENT DOCUMENTS

EP	0 868 032 A2	9/1998
GB	2287414	9/1995
GB	2331195	5/1999
JP	07 088523	4/1995
JP	07-274228	10/1995
JP	9 224271	8/1997
JP	10 076071	3/1998
JP	10 327439	12/1998
JP	11-088508	3/1999
JP	11-137851	5/1999
JP	11-271420	10/1999

OTHER PUBLICATIONS

Network Queuing Theory and its Application to Computer System Models, submitted by Milwaukee School of Engineering, [retrieved from http://people.msoe.edu/~barnicks/courses/cs384/papers9899/torres.pdf]. Jan. 28, 1999.*

Why Newton? [http://users.primushost.com/~rik/newtontoday/why.htmll], Newton Today, Aug. 16, 1996, pps. 1–5.*

* cited by examiner

Primary Examiner—Mark Sager
Assistant Examiner—Aaron Capron
(74) *Attorney, Agent, or Firm*—Nixon & Vanderhye PC

(57) **ABSTRACT**

A pager cartridge for use with a game machine having a game program executing processing system including a microprocessor to execute a video game program and player controls operable by a player to generate video game control signals. The pager cartridge includes radio circuitry configured to receive messages containing video game program instructions transmitted via a paging a paging system and a connector that, in use, electrically connects the pager cartridge to the game machine.

44 Claims, 38 Drawing Sheets

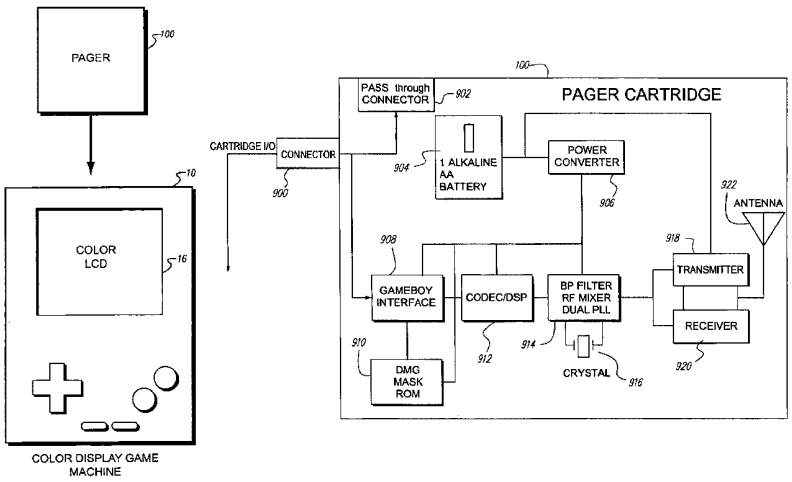

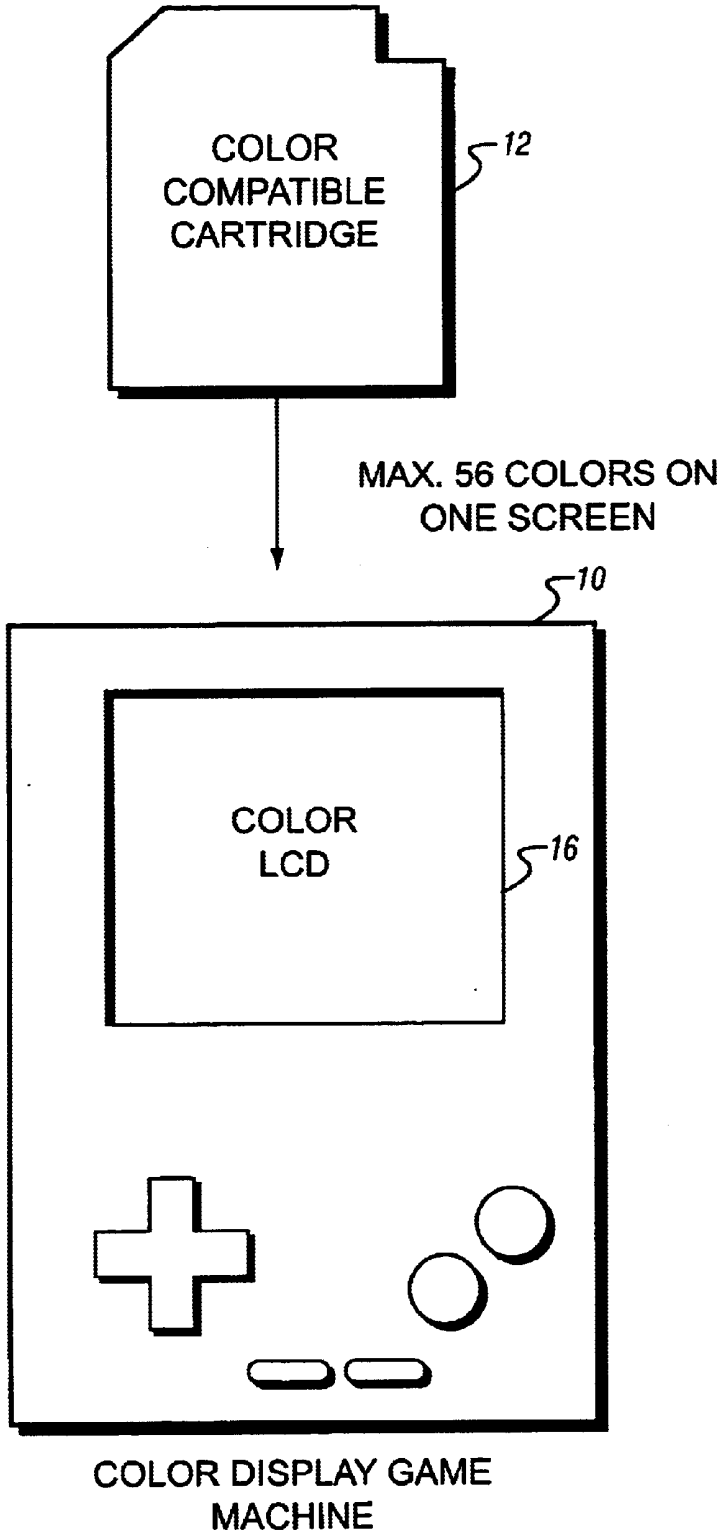
COLOR
COMPATIBLE
CARTRIDGE
12
MAX. 56 COLORS ON
ONE SCREEN
10
COLOR
LCD
16
COLOR DISPLAY GAME
MACHINE

Fig.1A

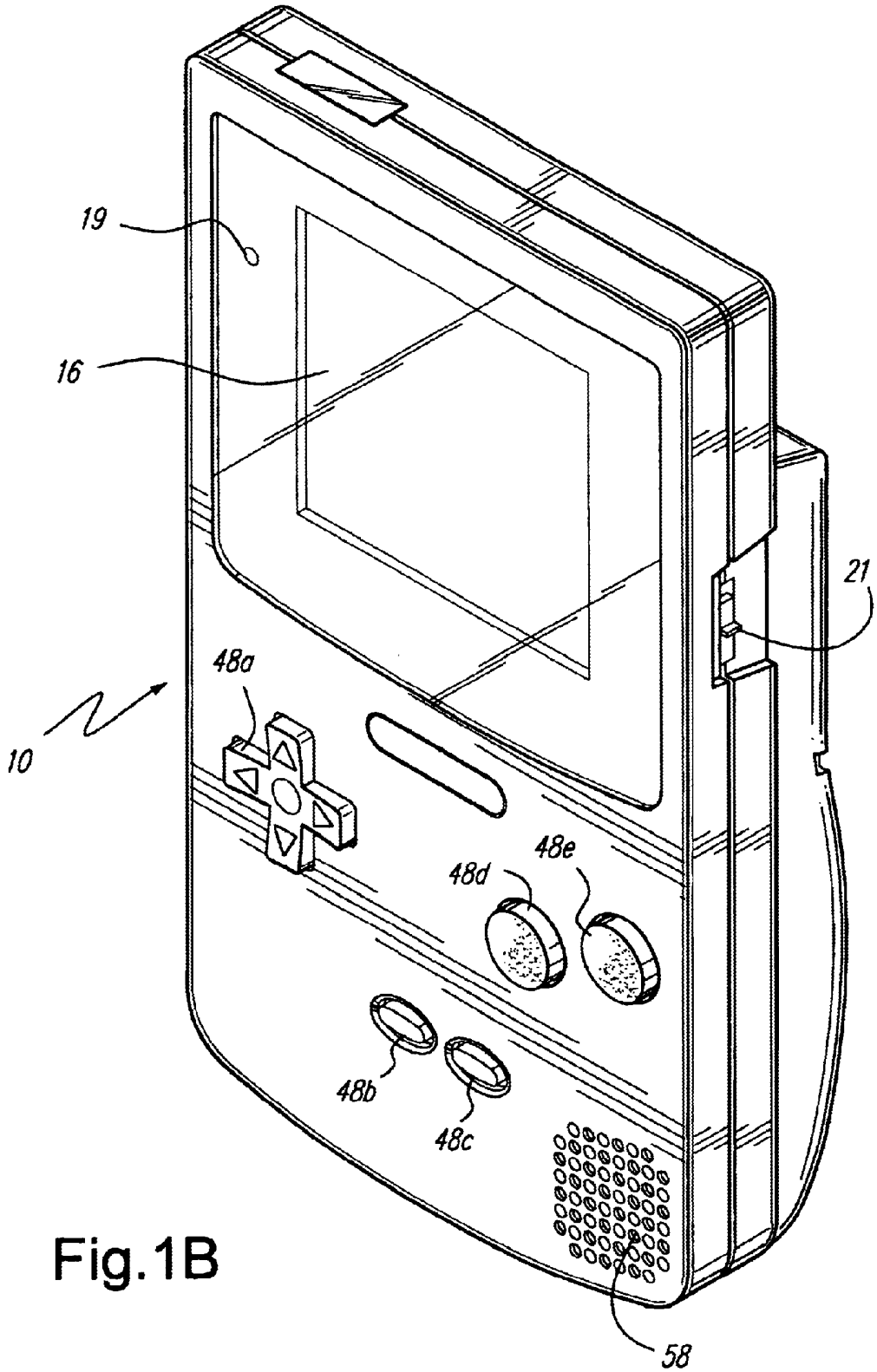

Fig.1B

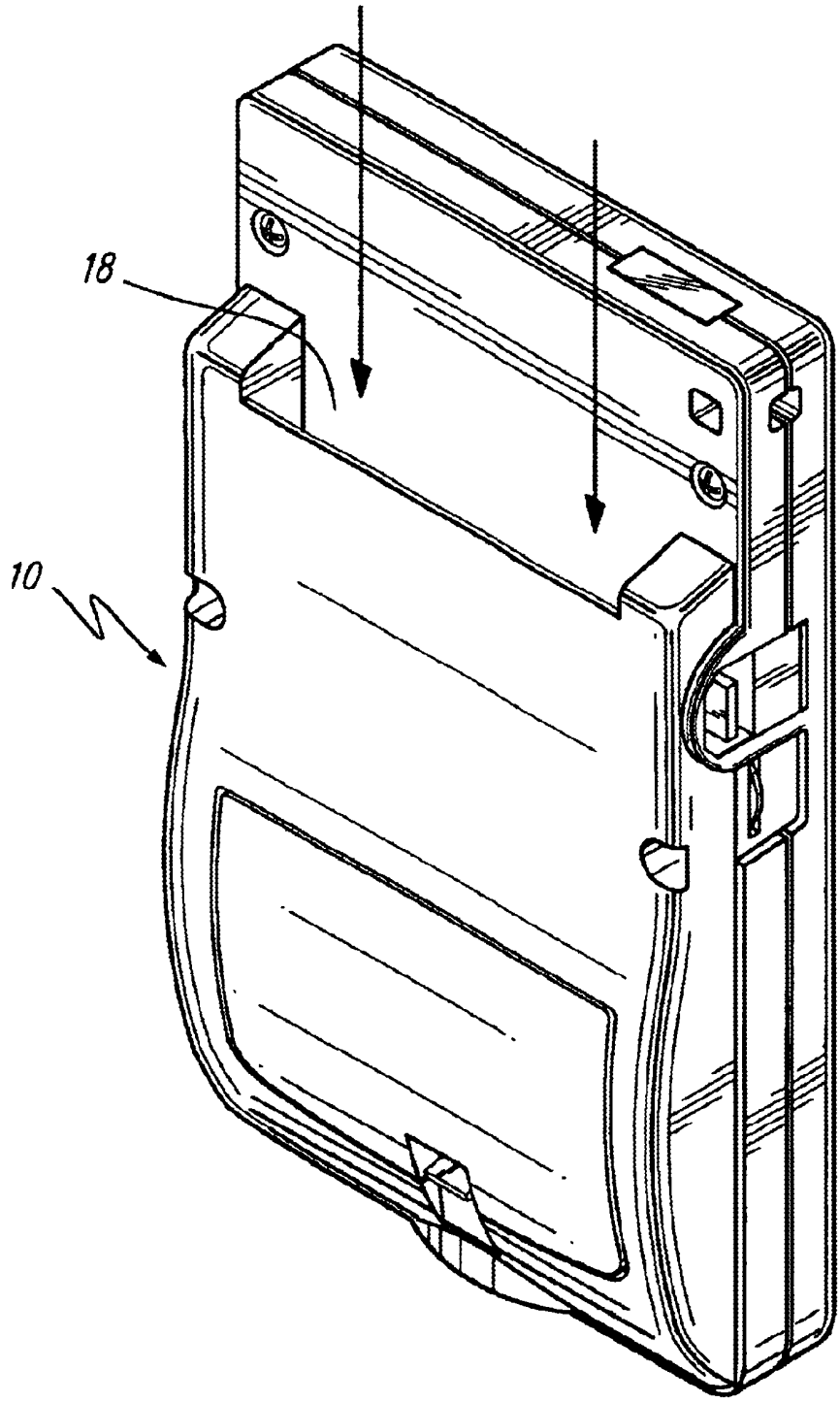

Fig.1C

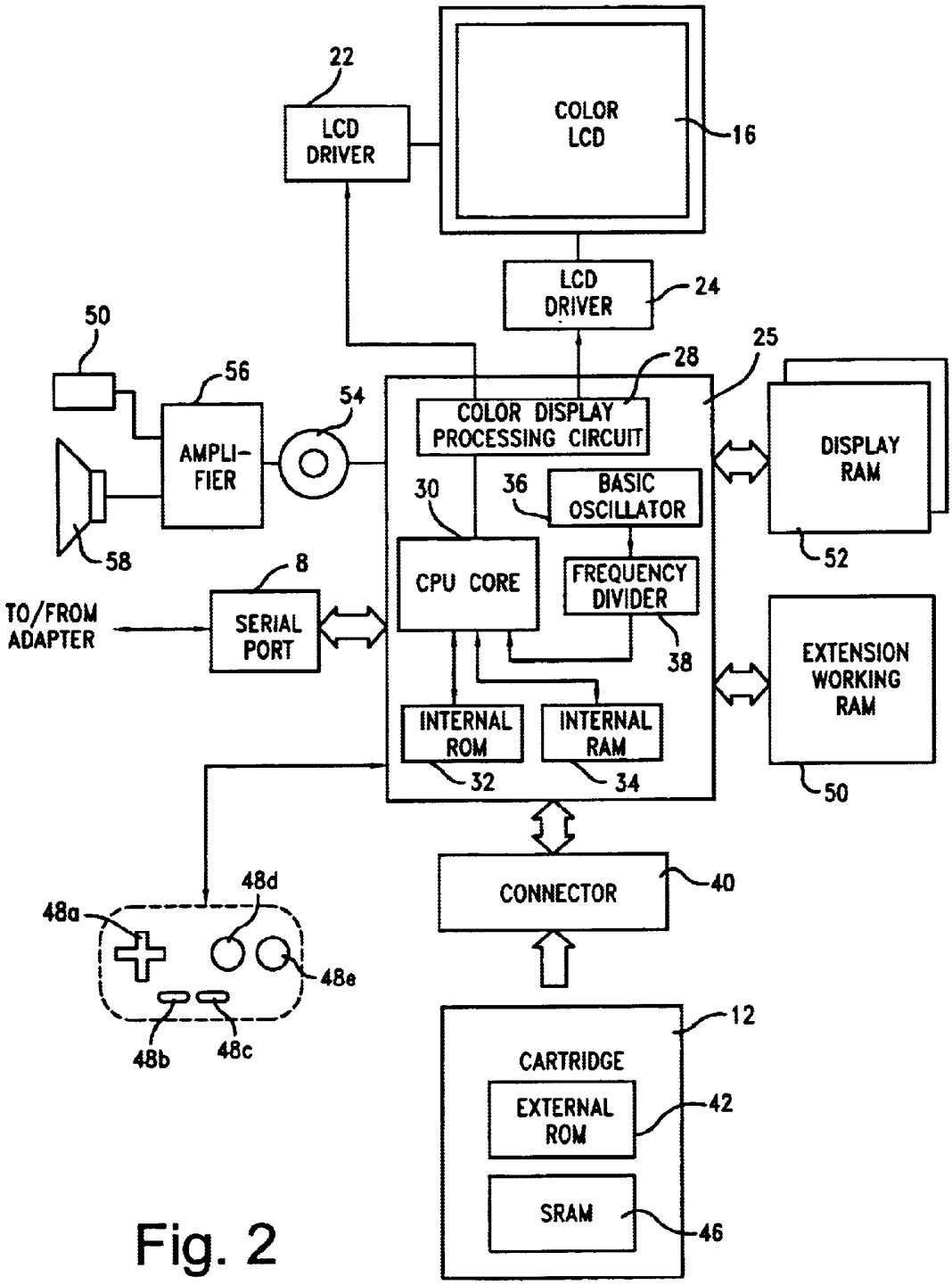
22
LCD DRIVER
COLOR LCD
16
LCD DRIVER
24
50
56
54
25
28
COLOR DISPLAY PROCESSING CIRCUIT
AMPLI-FIER
DISPLAY RAM
30
36
BASIC OSCILLATOR
58
52
8
CPU CORE
FREQUENCY DIVIDER
TO/FROM ADAPTER
SERIAL PORT
38
EXTENSION WORKING RAM
INTERNAL ROM
INTERNAL RAM
32
34
50
CONNECTOR
40
48d
48a
48e
48b
48c
12
CARTRIDGE
EXTERNAL ROM
42
SRAM
46

Fig. 2

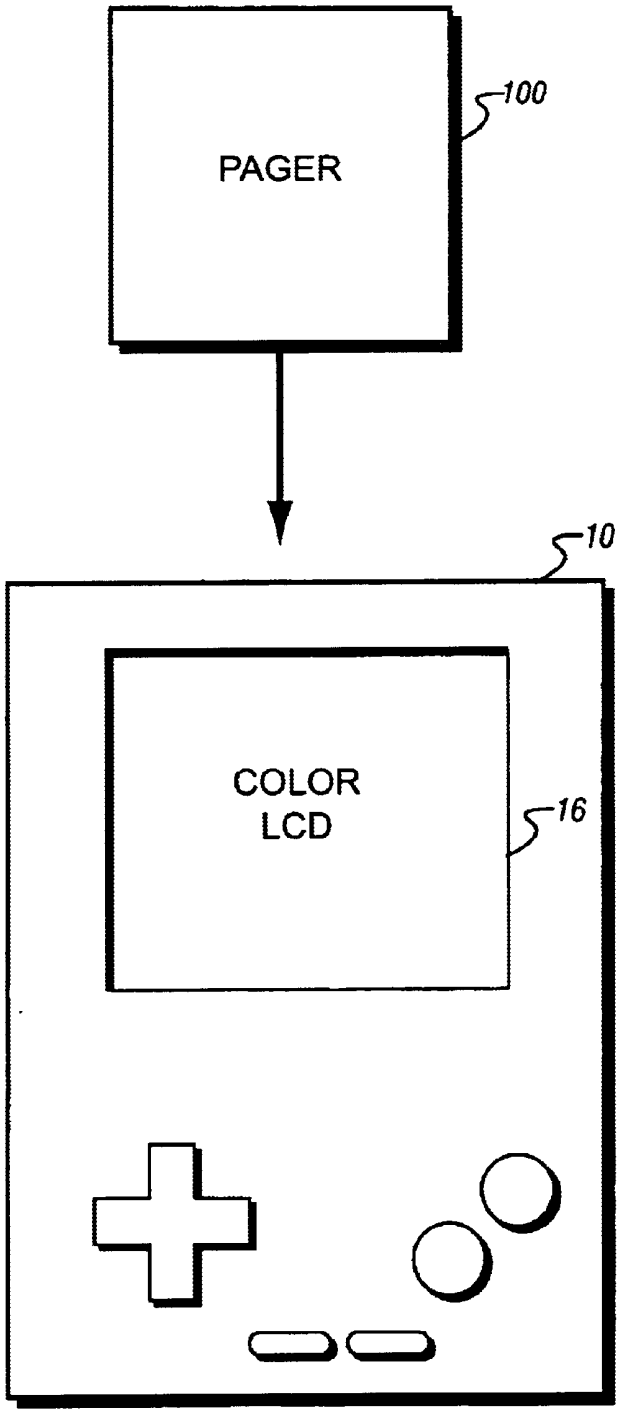

COLOR DISPLAY GAME MACHINE

Fig.3

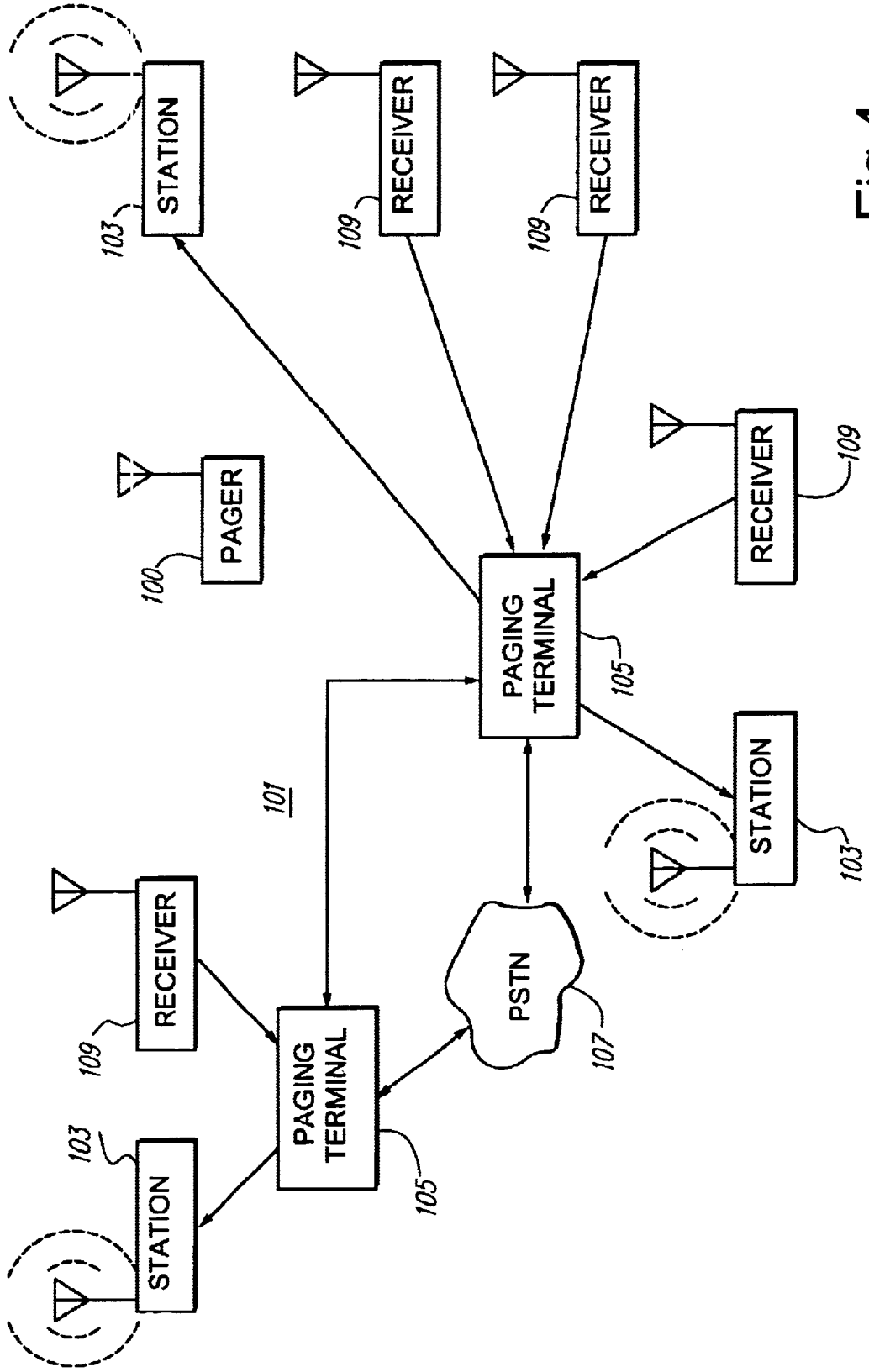
STATION
103
RECEIVER
109
RECEIVER
109
PAGER
100
RECEIVER
109
PAGING TERMINAL
105
101
STATION
103
RECEIVER
109
PAGING TERMINAL
105
PSTN
107
STATION
103

Fig.4

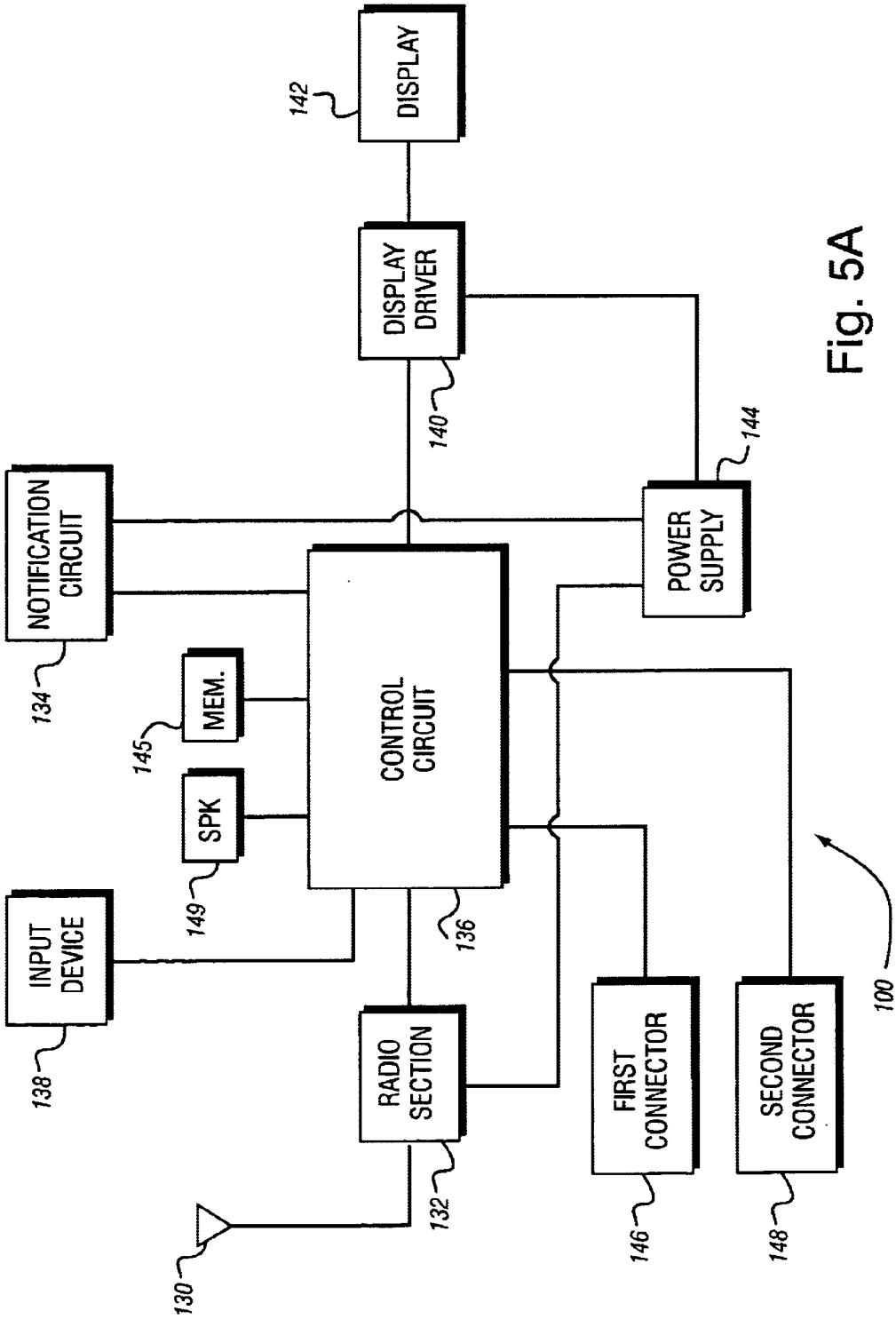
DISPLAY
142
DISPLAY DRIVER
140
NOTIFICATION CIRCUIT
134
POWER SUPPLY
144
MEM.
145
CONTROL CIRCUIT
SPK
149
INPUT DEVICE
138
136
RADIO SECTION
132
FIRST CONNECTOR
146
SECOND CONNECTOR
148
130
100

Fig. 5A

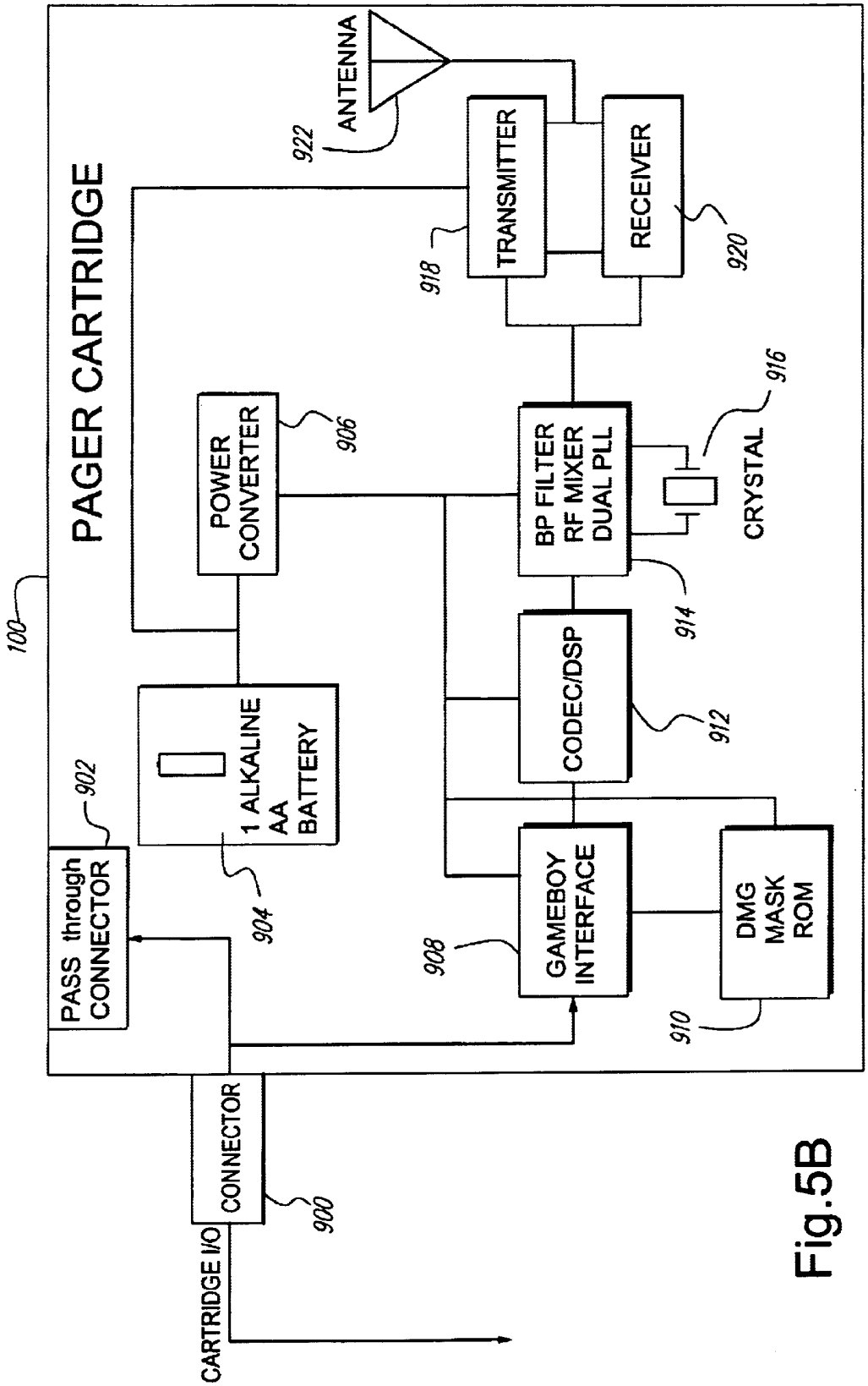
PAGER CARTRIDGE
100
ANTENNA
922
TRANSMITTER
918
RECEIVER
920
POWER CONVERTER
906
BP FILTER RF MIXER DUAL PLL
914
CRYSTAL
916
CODEC/DSP
912
1 ALKALINE AA BATTERY
904
PASS through CONNECTOR
902
GAMEBOY INTERFACE
908
DMG MASK ROM
910
CONNECTOR
900
CARTRIDGE I/O

Fig.5B

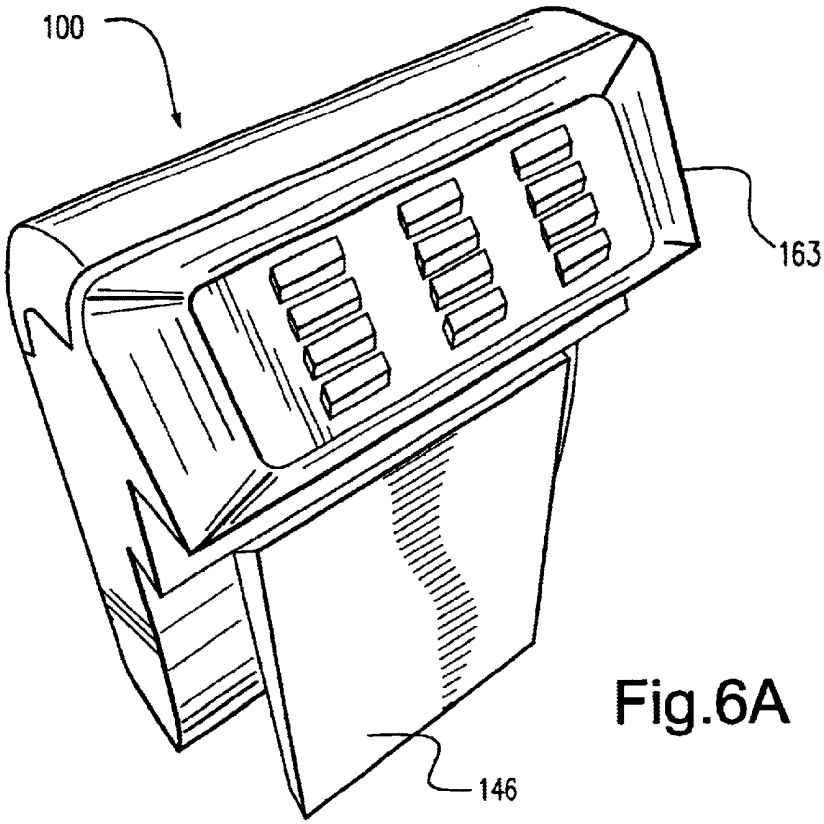

Fig.6A

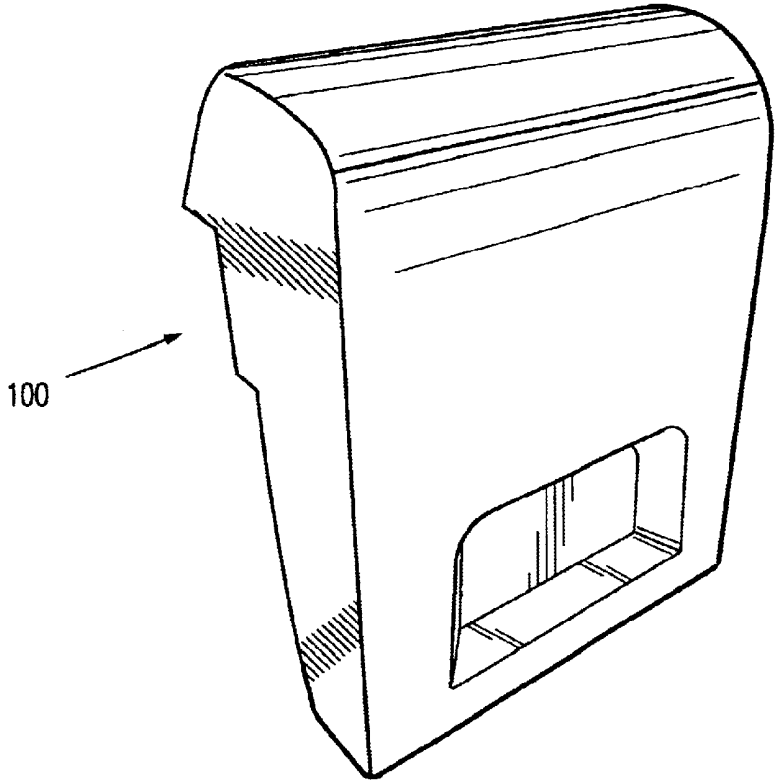

Fig.6B

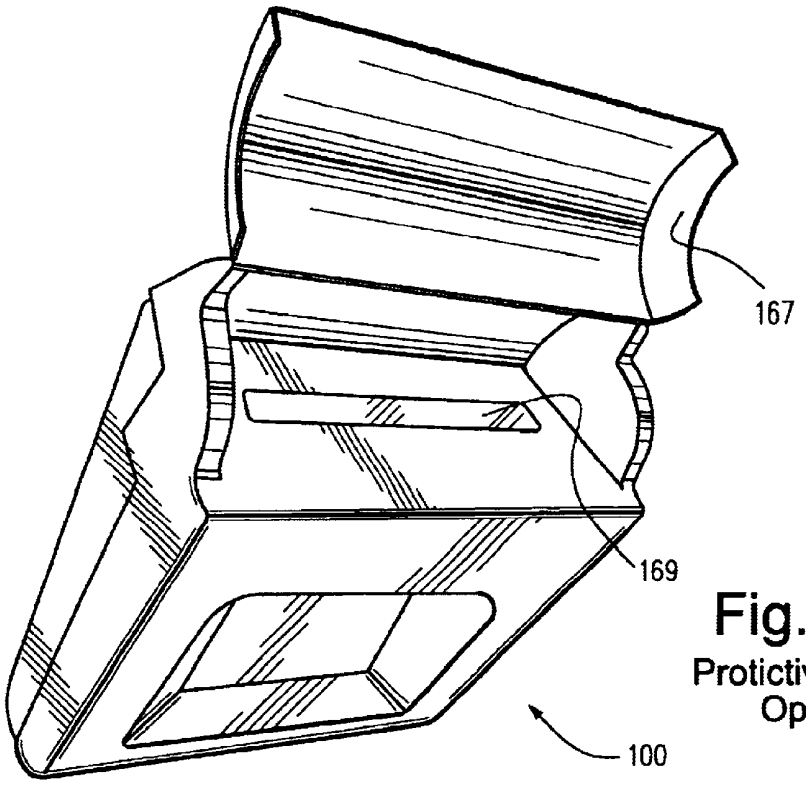

Fig.6C
Protictive Flap Open

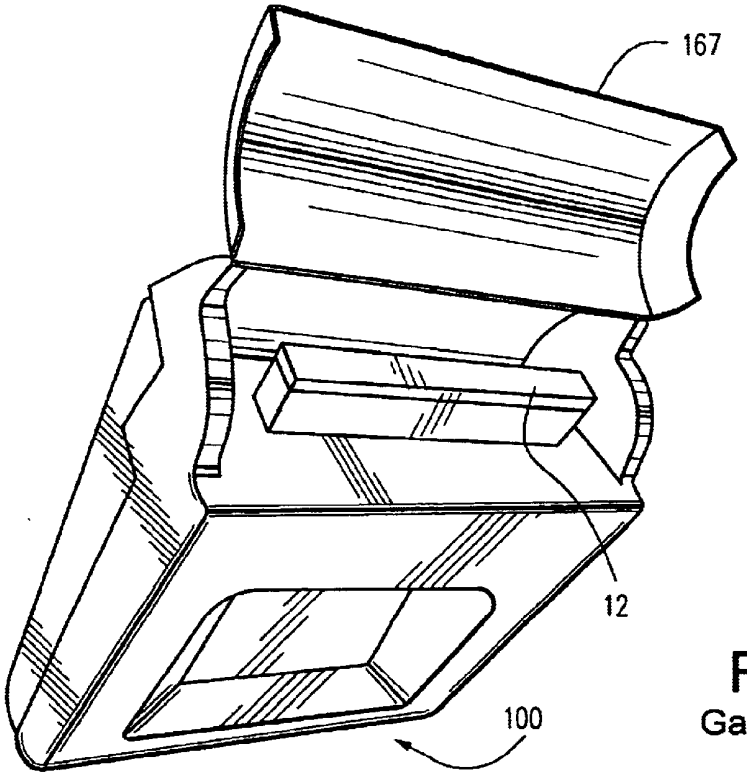

Fig.6D
Game Inserted

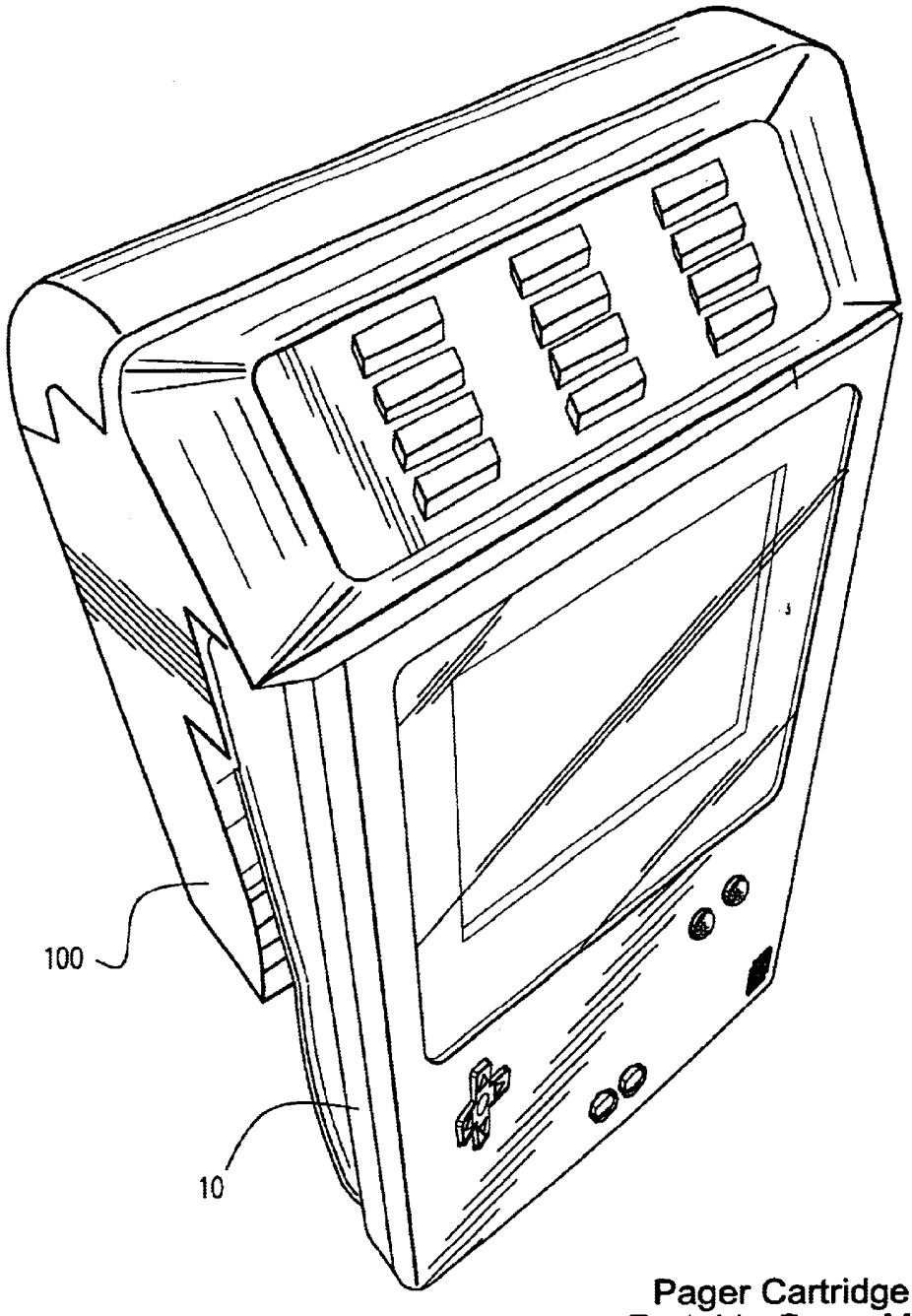

Pager Cartridge With
Portable Game Machine

Fig.6E

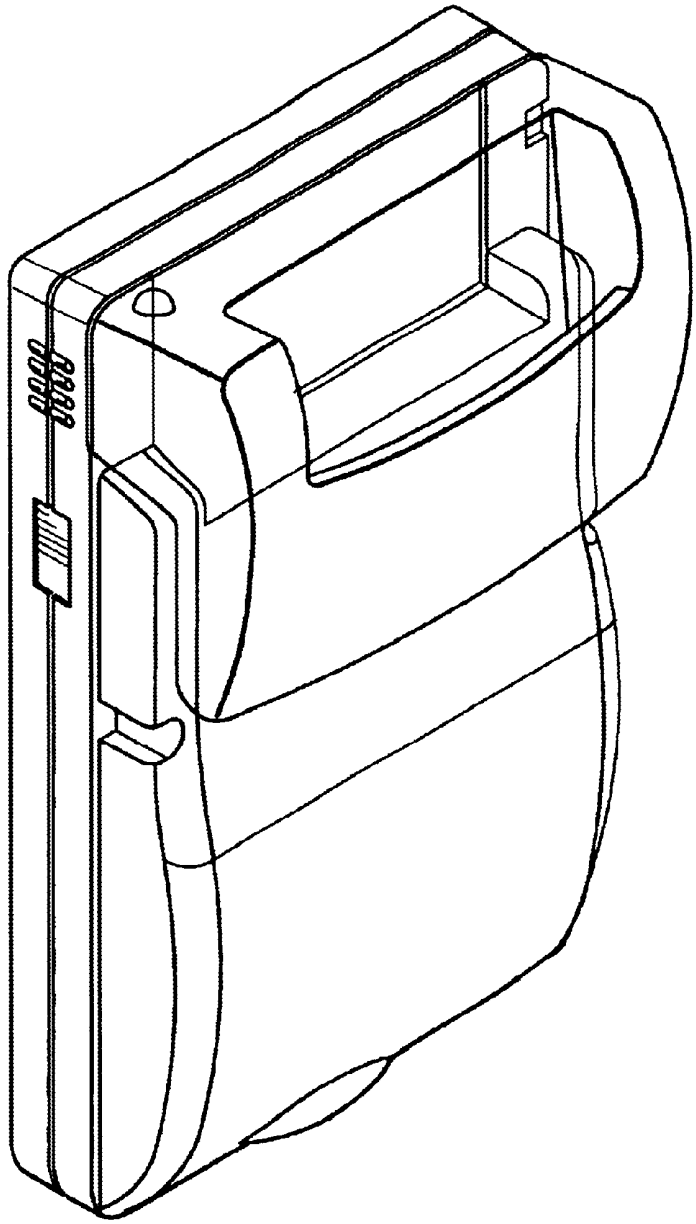

Fig.6F

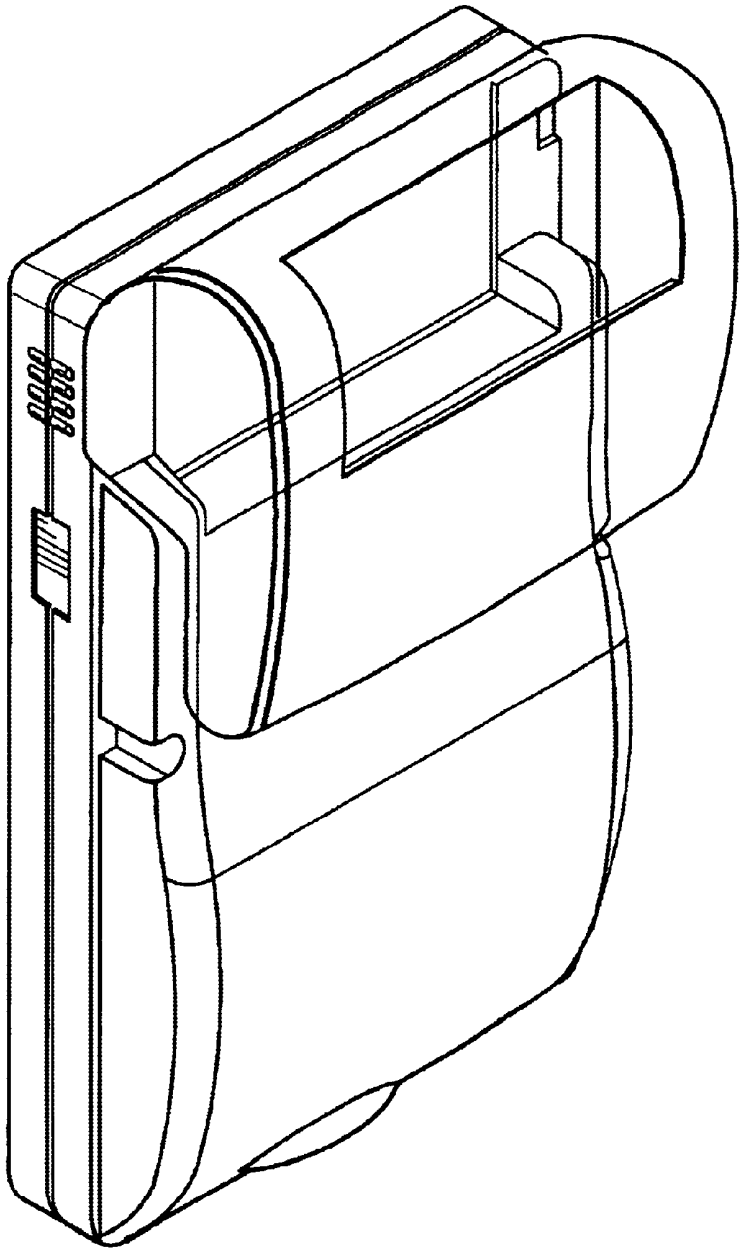

Fig.6G

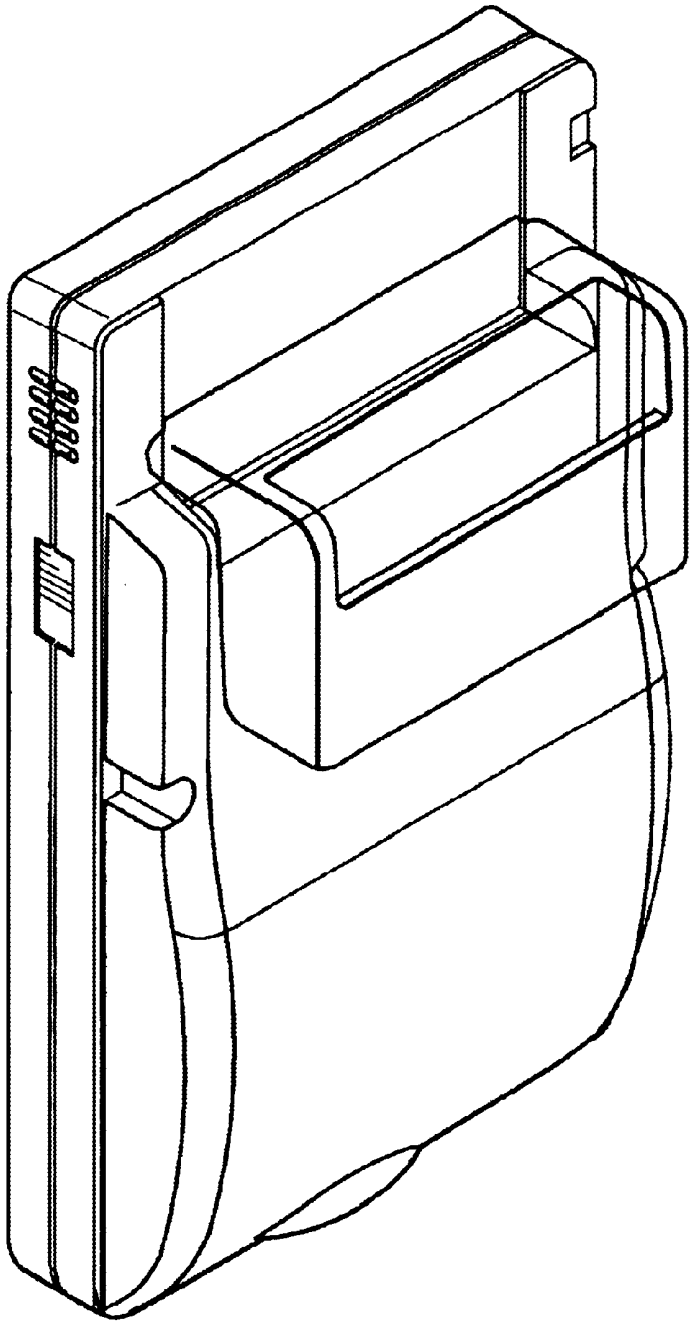

Fig.6H

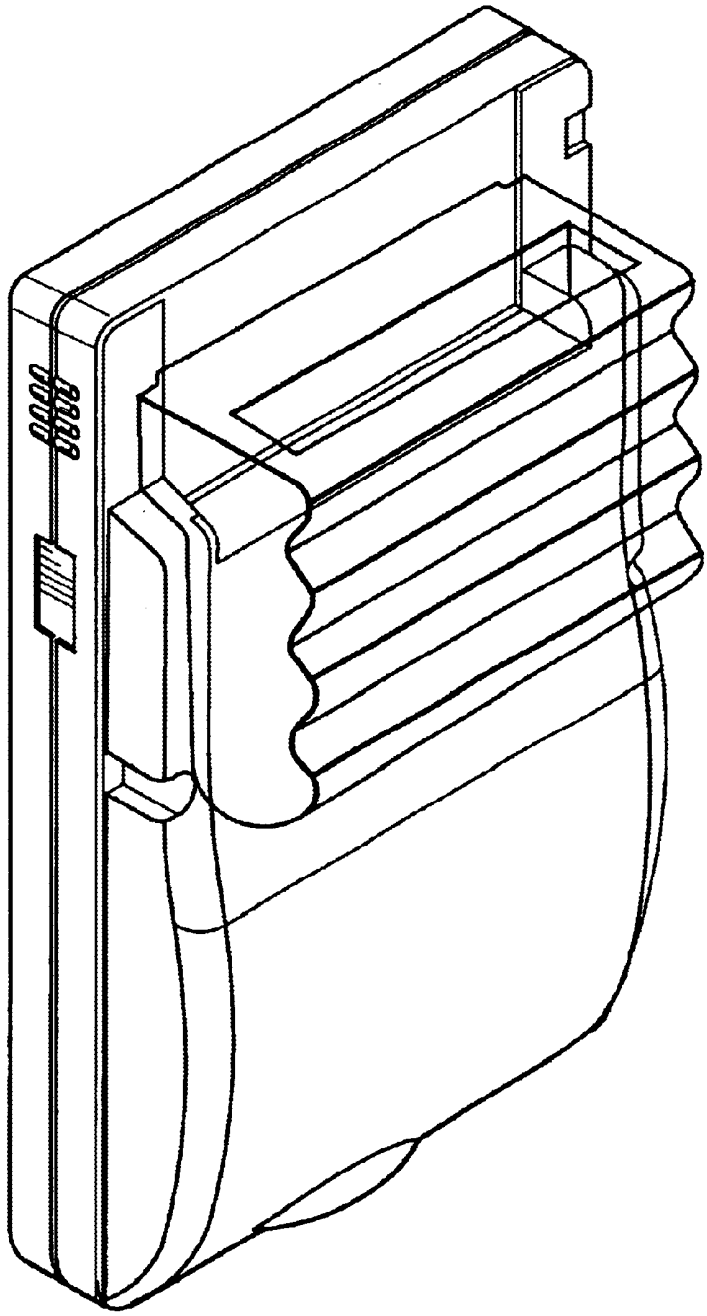

Fig.6I

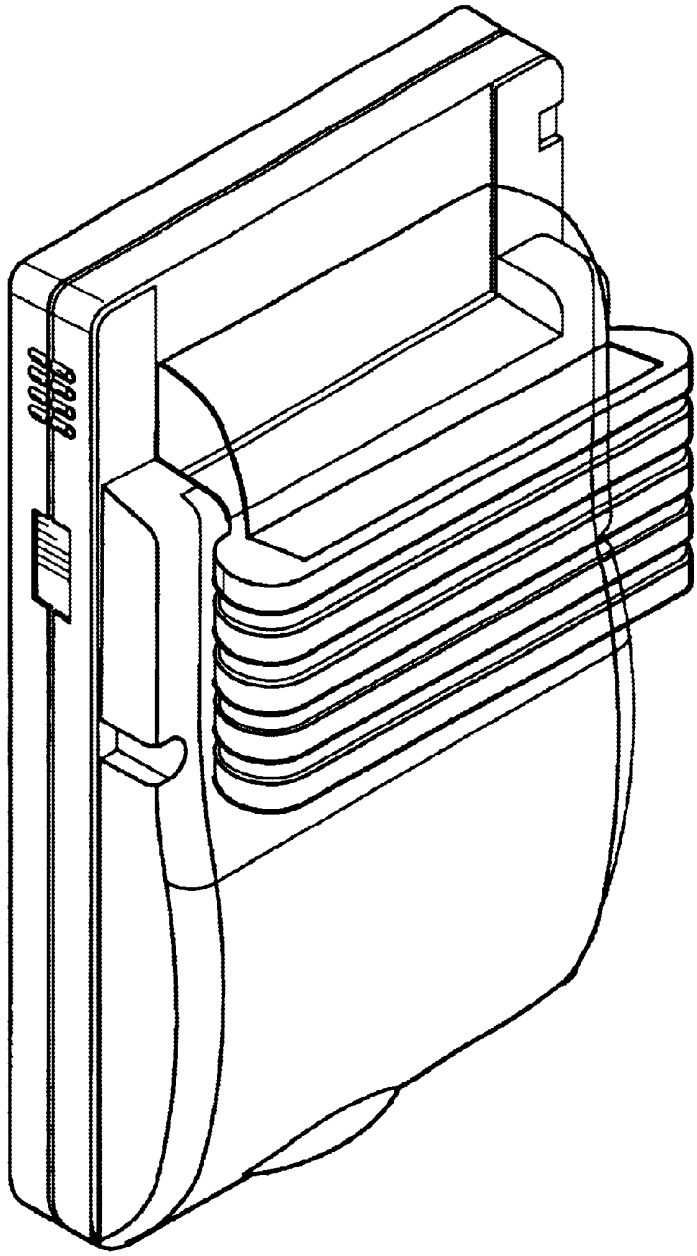

Fig.6J

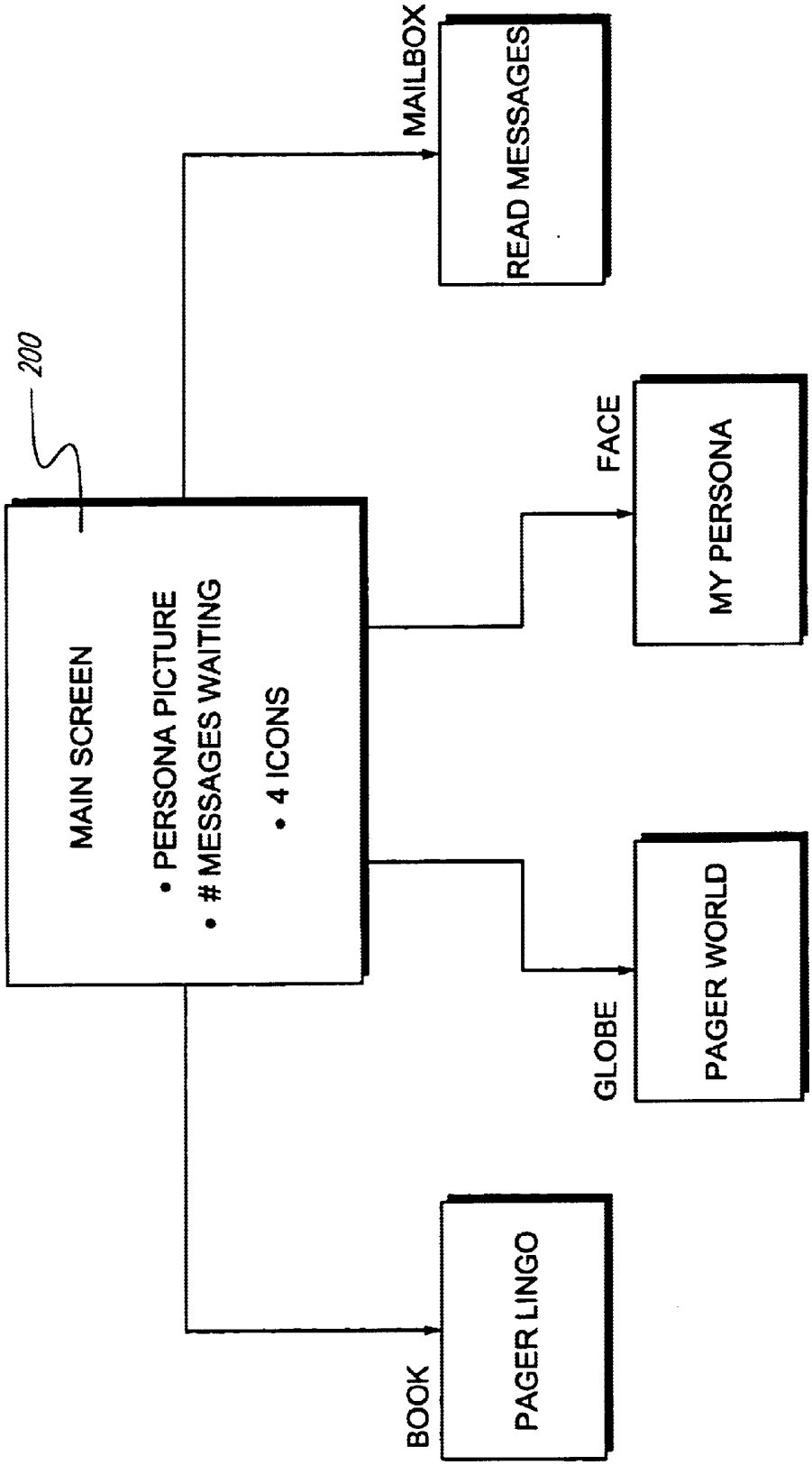
200
MAIN SCREEN
• PERSONA PICTURE
• # MESSAGES WAITING
• 4 ICONS
MAILBOX
READ MESSAGES
FACE
MY PERSONA
GLOBE
PAGER WORLD
BOOK
PAGER LINGO

Fig.7

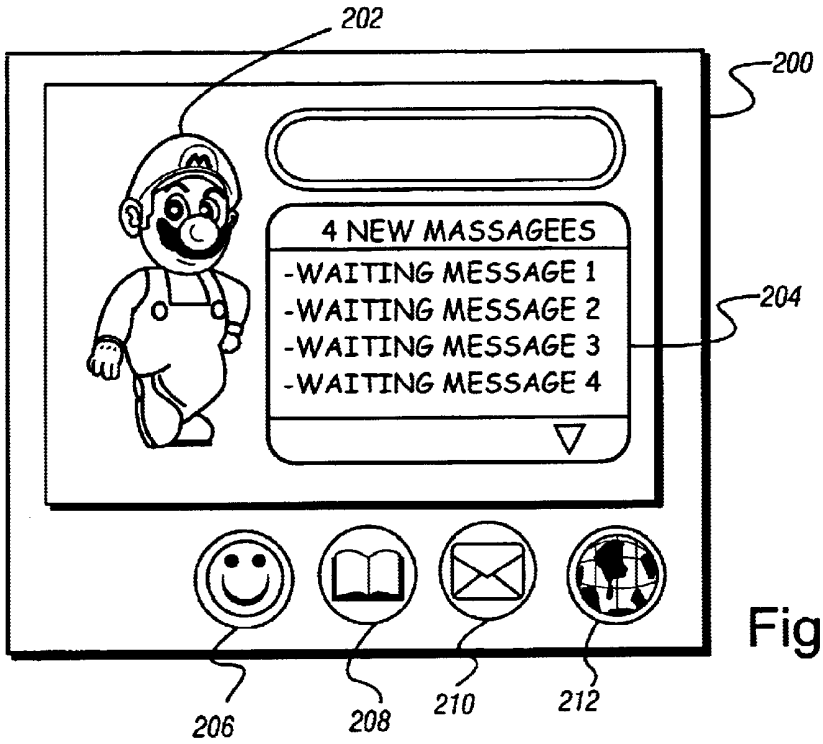
202
200
4 NEW MASSAGEES
-WAITING MESSAGE 1
-WAITING MESSAGE 2
-WAITING MESSAGE 3
-WAITING MESSAGE 4
204
206
208
210
212

Fig.8A

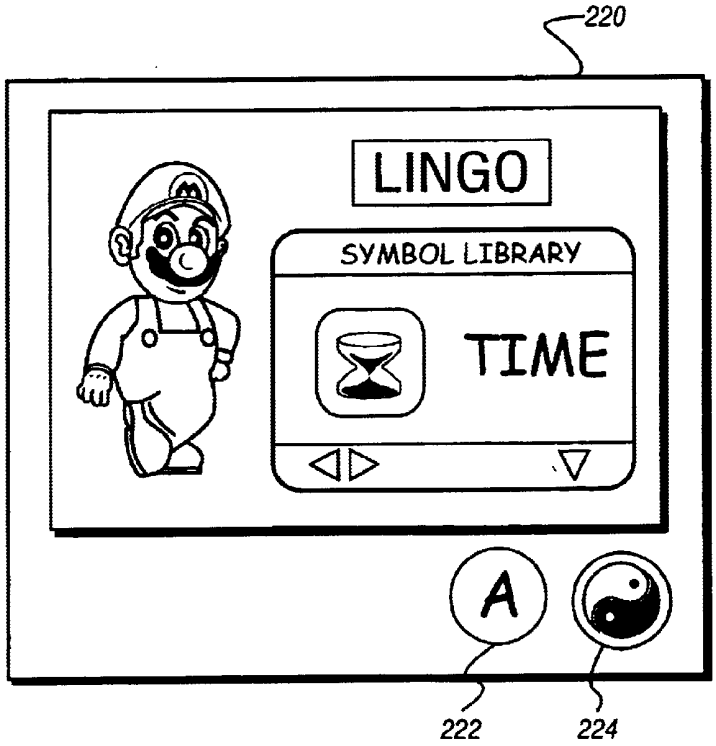
220
LINGO
SYMBOL LIBRARY
TIME
A
222
224

Fig.8B

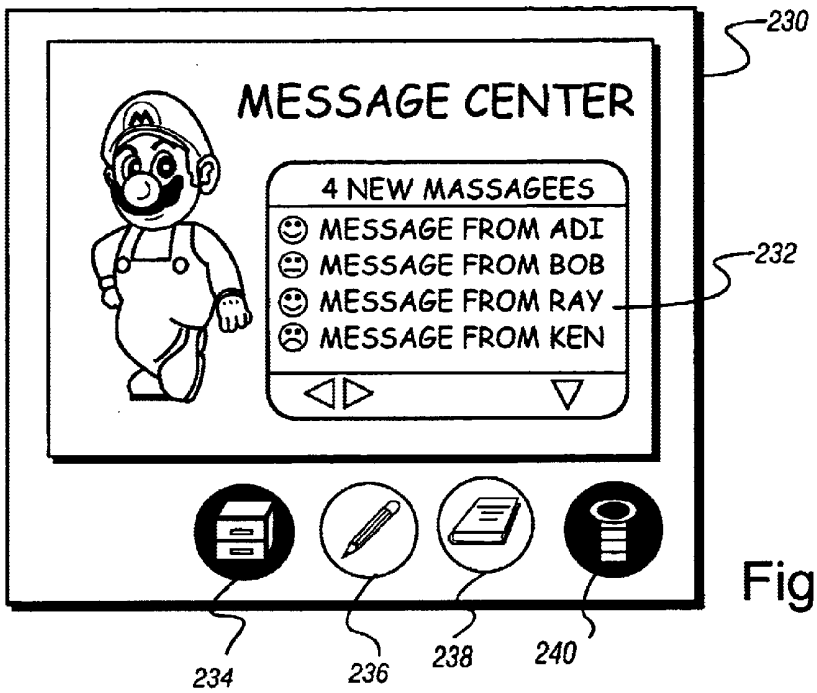
230
MESSAGE CENTER
4 NEW MASSAGEES
MESSAGE FROM ADI
MESSAGE FROM BOB
MESSAGE FROM RAY
MESSAGE FROM KEN
232
234
236
238
240

Fig.8C

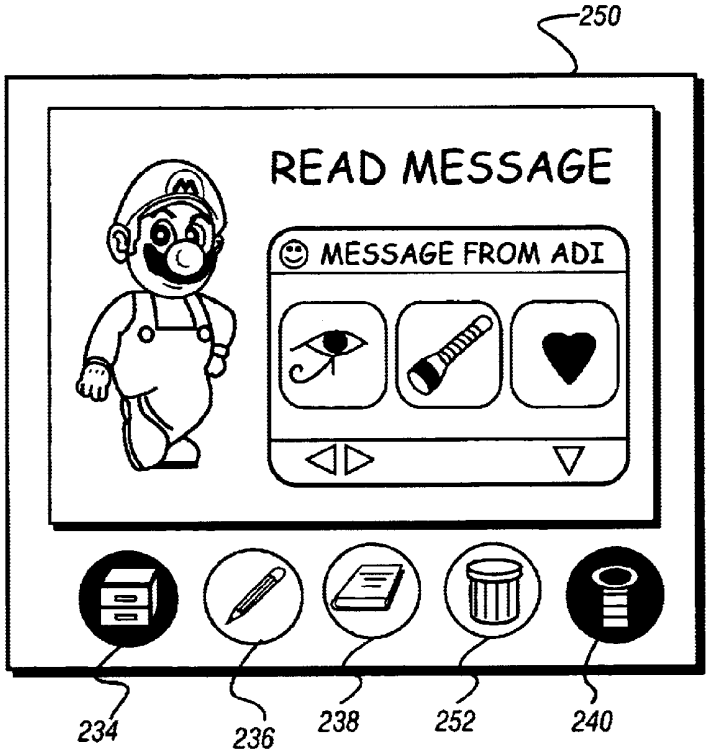
250
READ MESSAGE
MESSAGE FROM ADI
234
236
238
252
240

Fig.8D

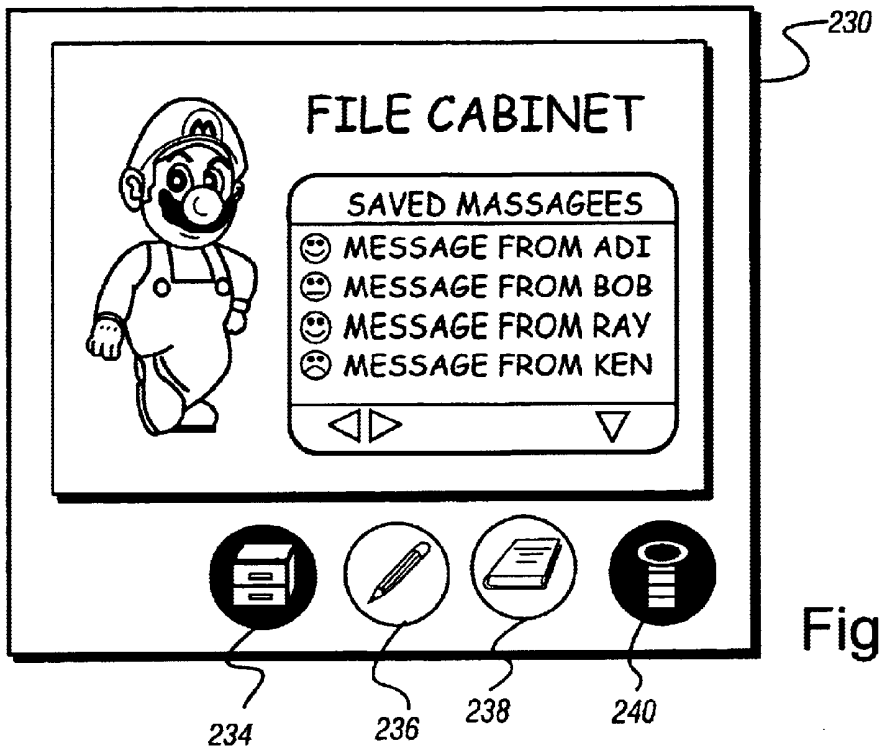
230
FILE CABINET
SAVED MASSAGEES
MESSAGE FROM ADI
MESSAGE FROM BOB
MESSAGE FROM RAY
MESSAGE FROM KEN
234
236
238
240

Fig.8E

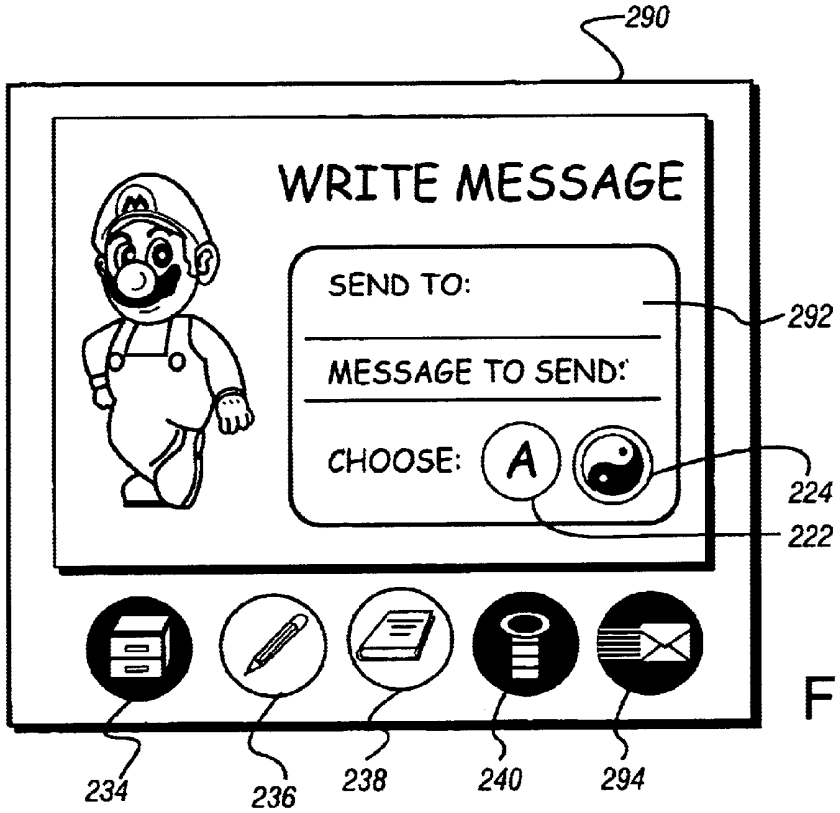
290
WRITE MESSAGE
SEND TO:
292
MESSAGE TO SEND:
CHOOSE:
A
224
222
234
236
238
240
294

Fig.8F

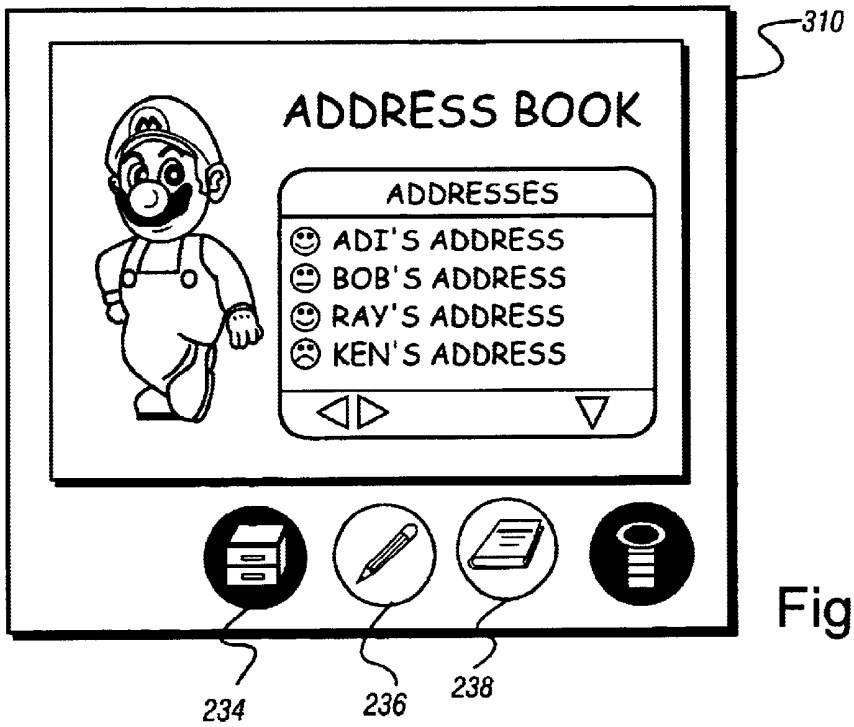
310
ADDRESS BOOK
ADDRESSES
ADI'S ADDRESS
BOB'S ADDRESS
RAY'S ADDRESS
KEN'S ADDRESS
234
236
238

Fig.8G

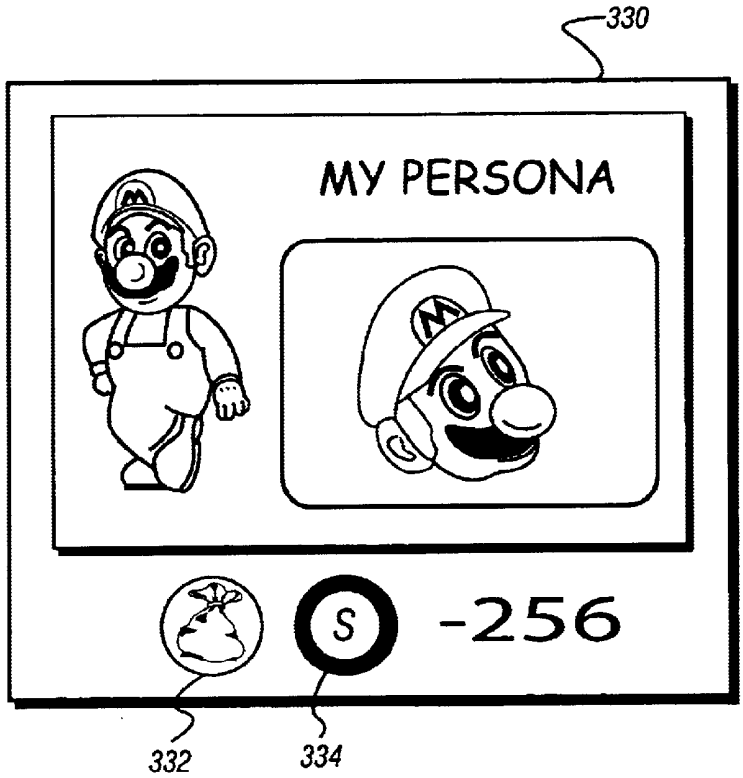
330
MY PERSONA
S
-256
332
334

Fig.8H

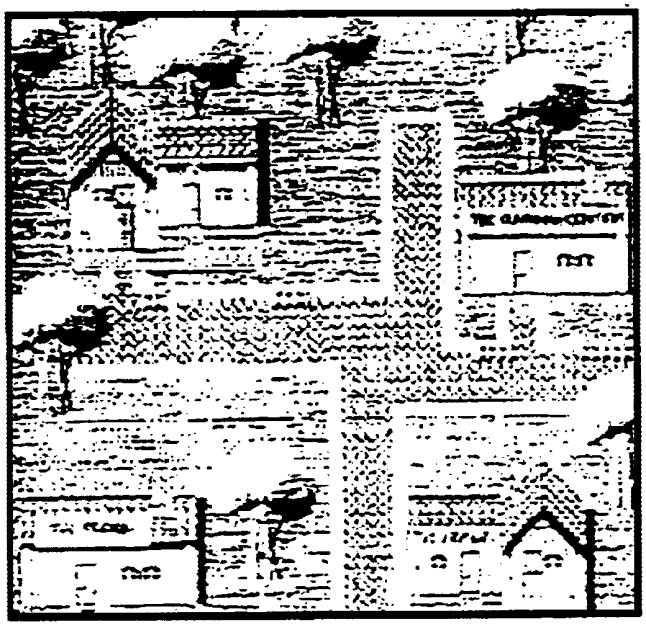

Fig.9A

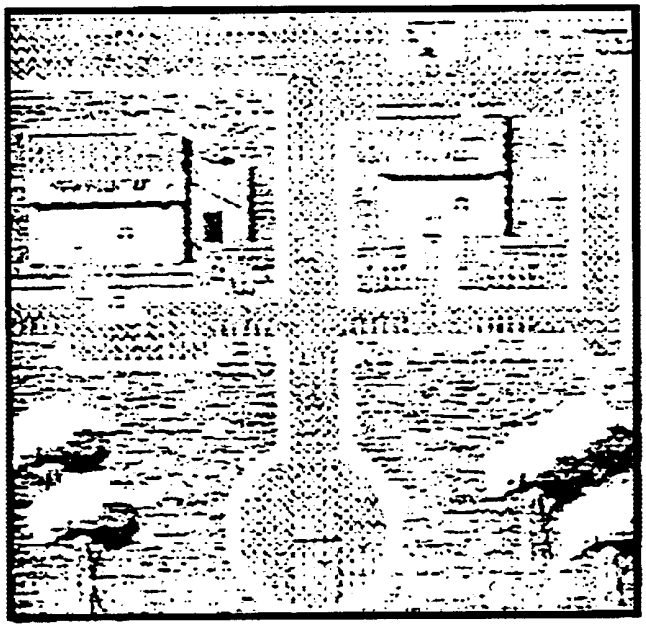

Fig.9B

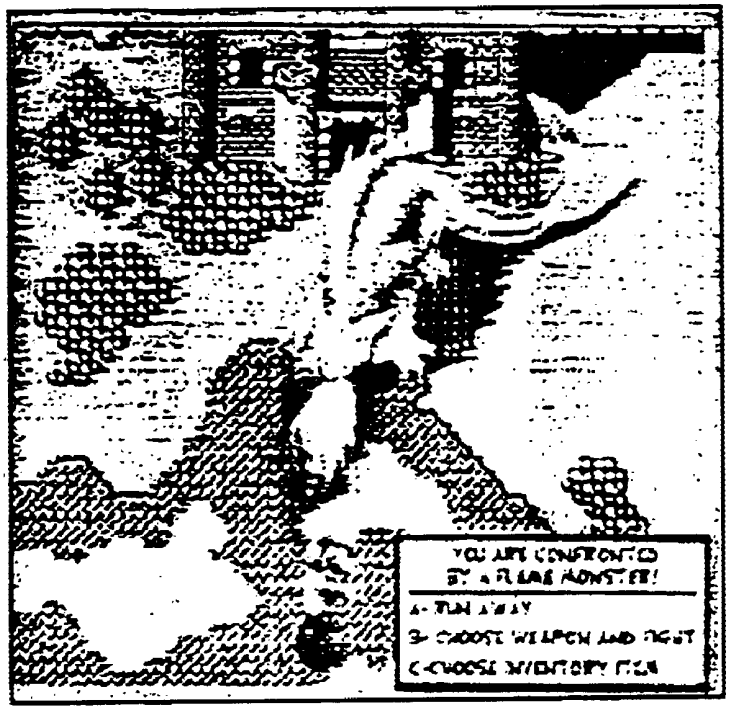
YOU ARE CONFRONTED
BY A FLAME MONSTER!
A- RUN AWAY
B- CHOOSE WEAPON AND FIGHT
C-CHOOSE INVENTORY ITEM

Fig.9C

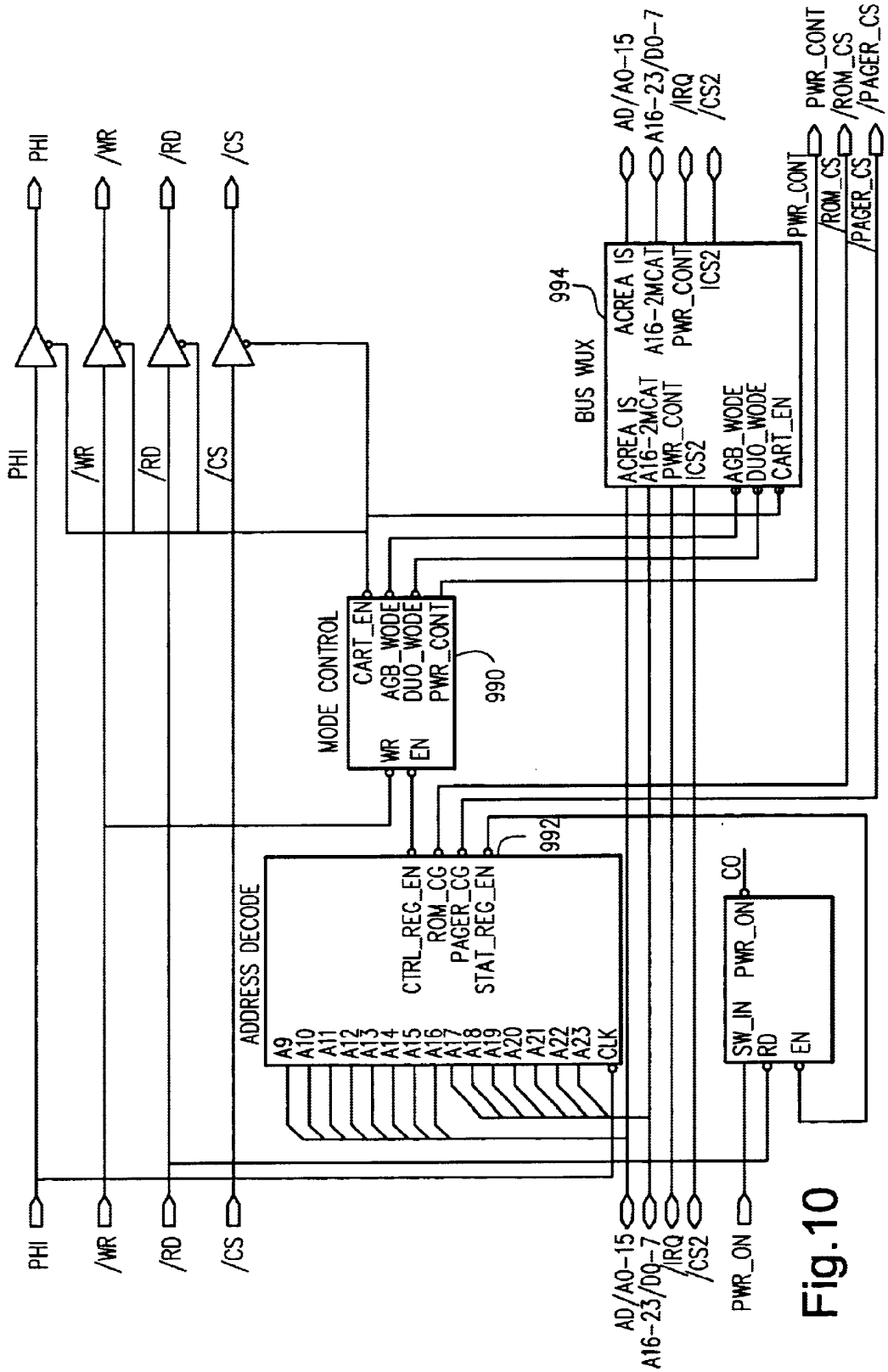
PHI
/WR
/RD
/CS
MODE CONTROL
CART_EN
AGB_WODE
DUO_WODE
PWR_CONT
WR
EN
990
BUS WUX
994
ACREA IS
A16-2MCAT
PWR_CONT
ICS2
AGB_WODE
DUO_WODE
CART_EN
AD/A0-15
A16-23/D0-7
/IRQ
/CS2
PWR_CONT
/ROM_CS
/PAGER_CS
ADDRESS DECODE
A9
A10
A11
A12
A13
A14
A15
A16
A17
A18
A19
A20
A21
A22
A23
CLK
CTRL_REG_EN
ROM_CG
PAGER_CG
STAT_REG_EN
992
CO
SW_IN
PWR_ON
RD
EN
PWR_ON

Fig. 10

Fig. 11A

SAMPLE MESSAGES

	COMMUNICATION	CHARACTERS	1 2 3 4 5 6 7 8 9 10 ($0.0625)	11 12 13 14 15 16 17 18 19 20 ($0.0625)	21 22 23 ($0.06)
(a)	1) QUESTION	NORMAL	I _ L O V E _ Y O U		
(b)		CODED	I ♥ U		
(c)	RESPONSE	CODED	☺		
(d)	2) QUESTION	NORMAL	C A L L _ H O M E _ N O W		
(e)		CODED	9 1 1		
(f)	RESPONSE	CODED	🚒		
(g)	3) QUESTION	NORMAL	M E E T _ Y O U _ @ M A L L _ 3 P M		
(h)		CODED	M A L L @ 3 ?		
(i)	RESPONSE	CODED	👍 ☺☺		
(j)	4) QUESTION	NORMAL	W H A T _ I S _ A N S W E R _ T O _ # 3 ?		
(k)		CODED	? # 3		
(l)	RESPONSE	CODED	👆		
(m)	5) QUESTION	NORMAL	D E F E A T E D _ B O W S E R I		
(n)		CODED	☠ B O W S E R		
(o)	RESPONSE	CODED	K E W L I U R G R B		
(p)	6) QUESTION	NORMAL	C H E C K _ Y O U R _ E M A I L		
(q)		CODED	✓📧 ! !		
(r)	RESPONSE	CODED	K _ L B R		
(s)	7) QUESTION	NORMAL	H O W _ M A N Y _ P O K E M O N _ I N _ S N A P		
(t)		CODED	# O F _ P M _ I N _ S N A P ?		
(u)	RESPONSE	CODED	6 3 ! !		
(v)	7) QUESTION	NORMAL	I S _ Y O U R _ D A D _ H O M E ?		
(w)		CODED	👍 👎 D A D H O M E		
(x)	RESPONSE	CODED	U R M Y ☼ I ☺		

CHAT CODES

CODE	*TRANSLATION*
NE1	ANYONE
P2P	PERSON TO PERSON
ANY1	ANYONE
IM	INSTANT MESSAGE
OH LOL	O LAUGH OUT LOUD
4EVER	FOREVER
CME	SEE ME
WANT 2 CHAT	WANT TO CHAT
GTG	GOOD TO GO
BYEEEEEE	BYE
;) or >;)	WINK
RROOOORAAARRR	RCAR
hehe	HA HA
LUV	LOVE
ROTFLOL	ROLL ON THE FLOOR LAUGHING OUT LOUD
BRB	BE RIGHT BACK

Fig.11B

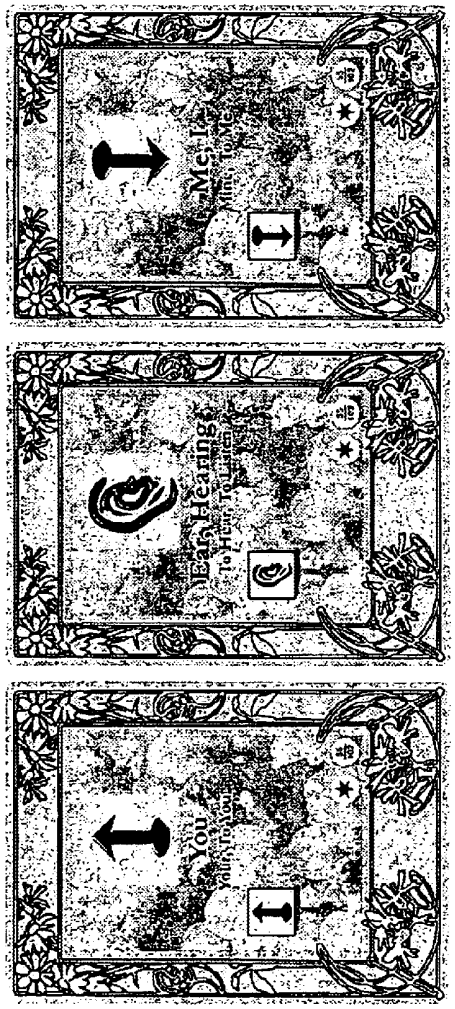

Fig. 11C Fig. 11D Fig. 11E

Fig. 11F Fig. 11G Fig. 11H

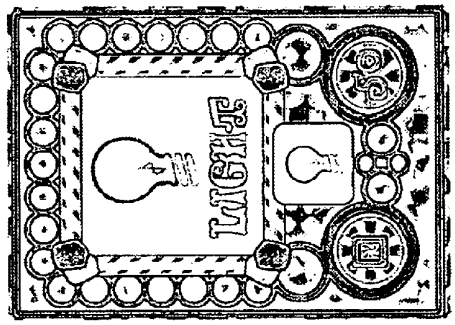

Fig. 11I

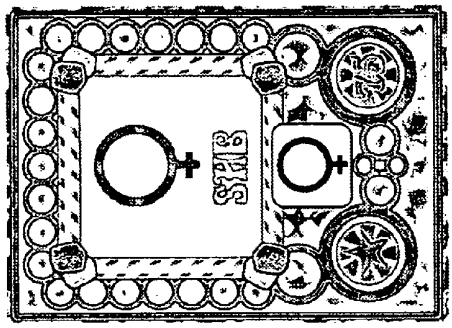

Fig. 11J

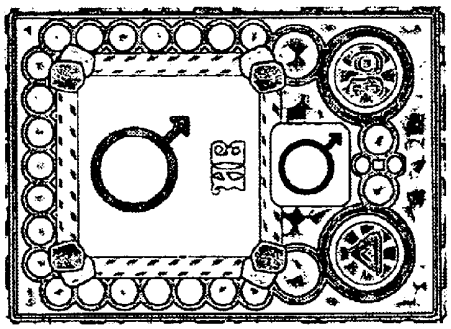

Fig. 11K

Fig. 11L

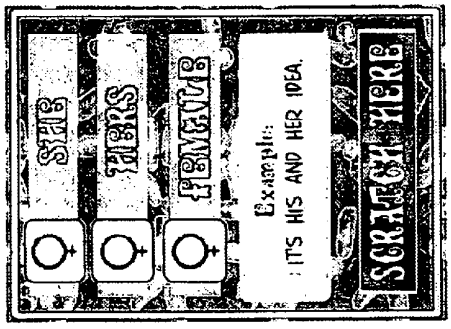

Fig. 11M

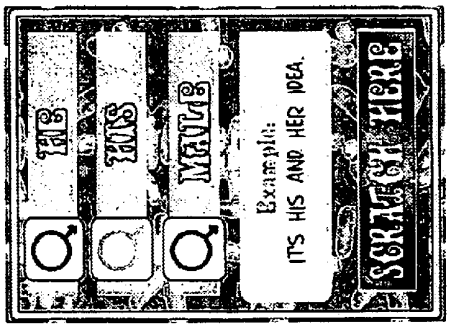

Fig. 11N

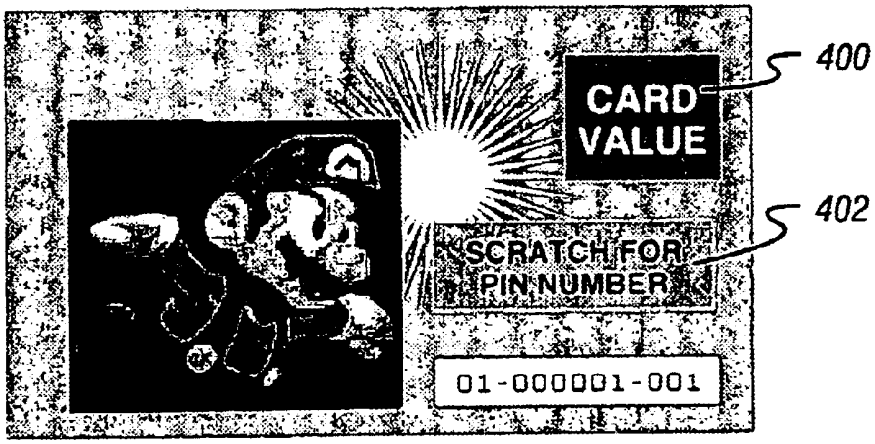

Fig.12A

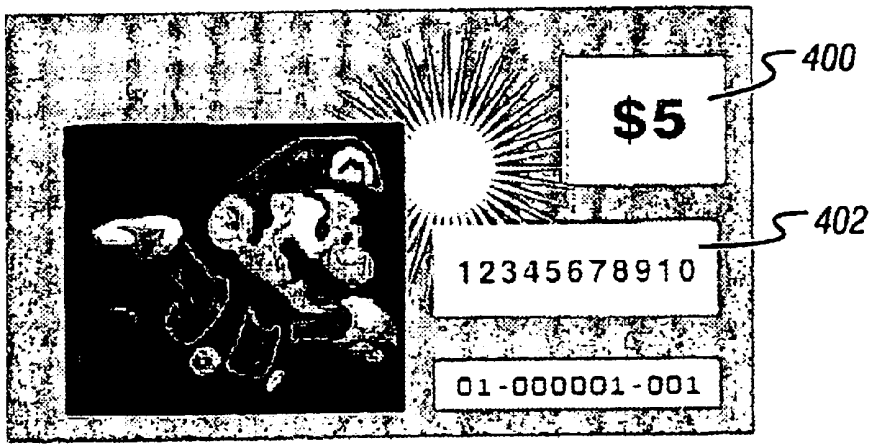

Fig.12B

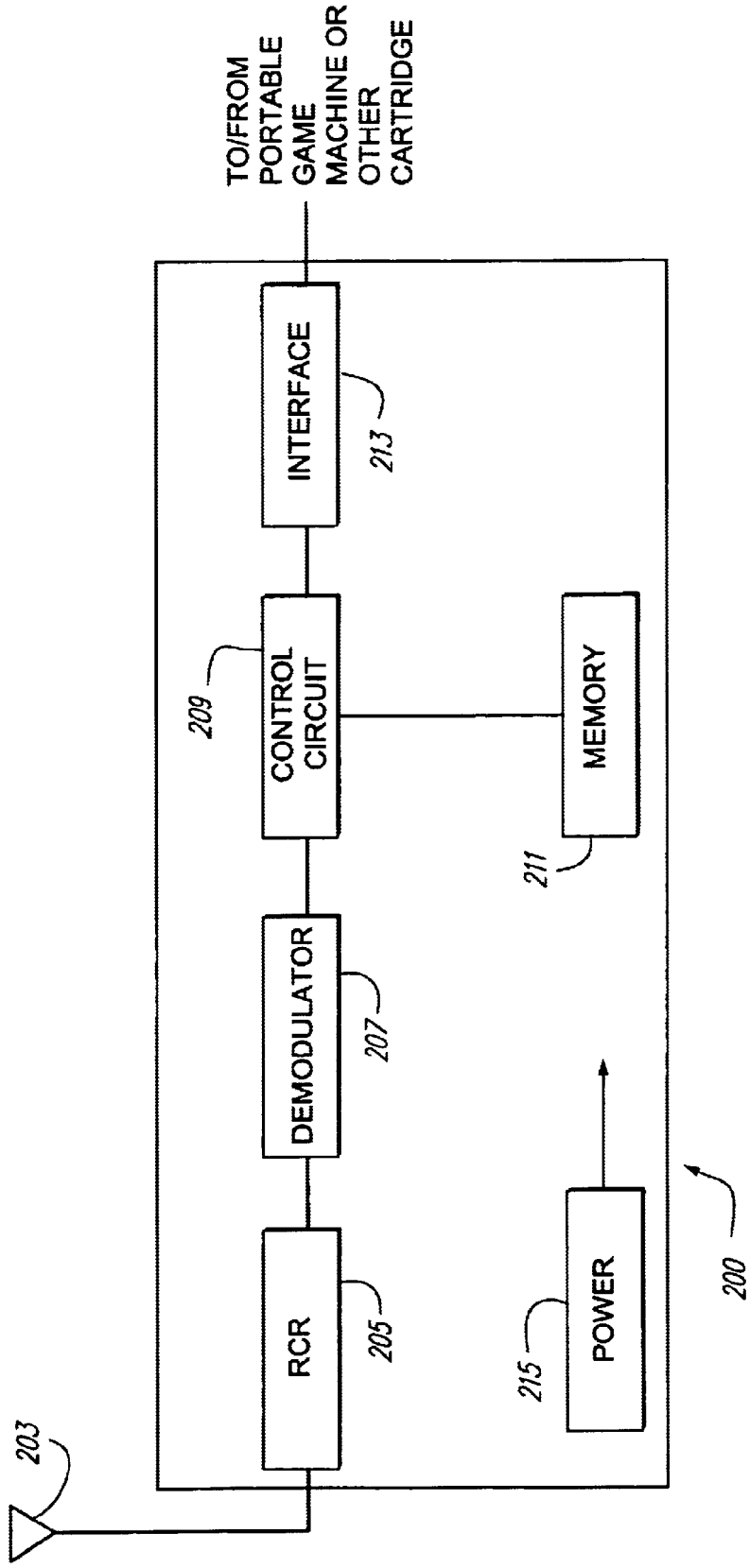
TO/FROM PORTABLE GAME MACHINE OR OTHER CARTRIDGE
INTERFACE
213
209
CONTROL CIRCUIT
MEMORY
211
DEMODULATOR
207
RCR
205
POWER
215
200
203

Fig.13

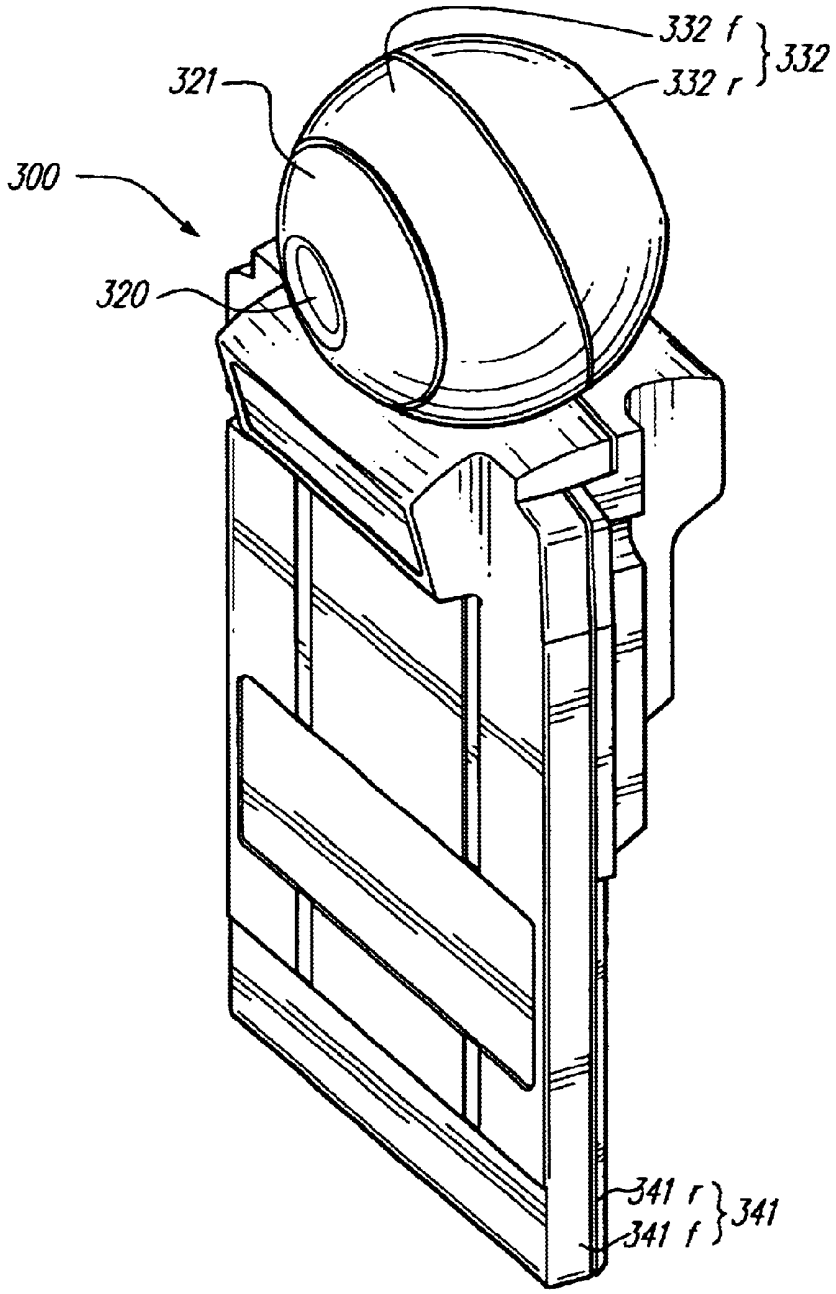

Fig.14

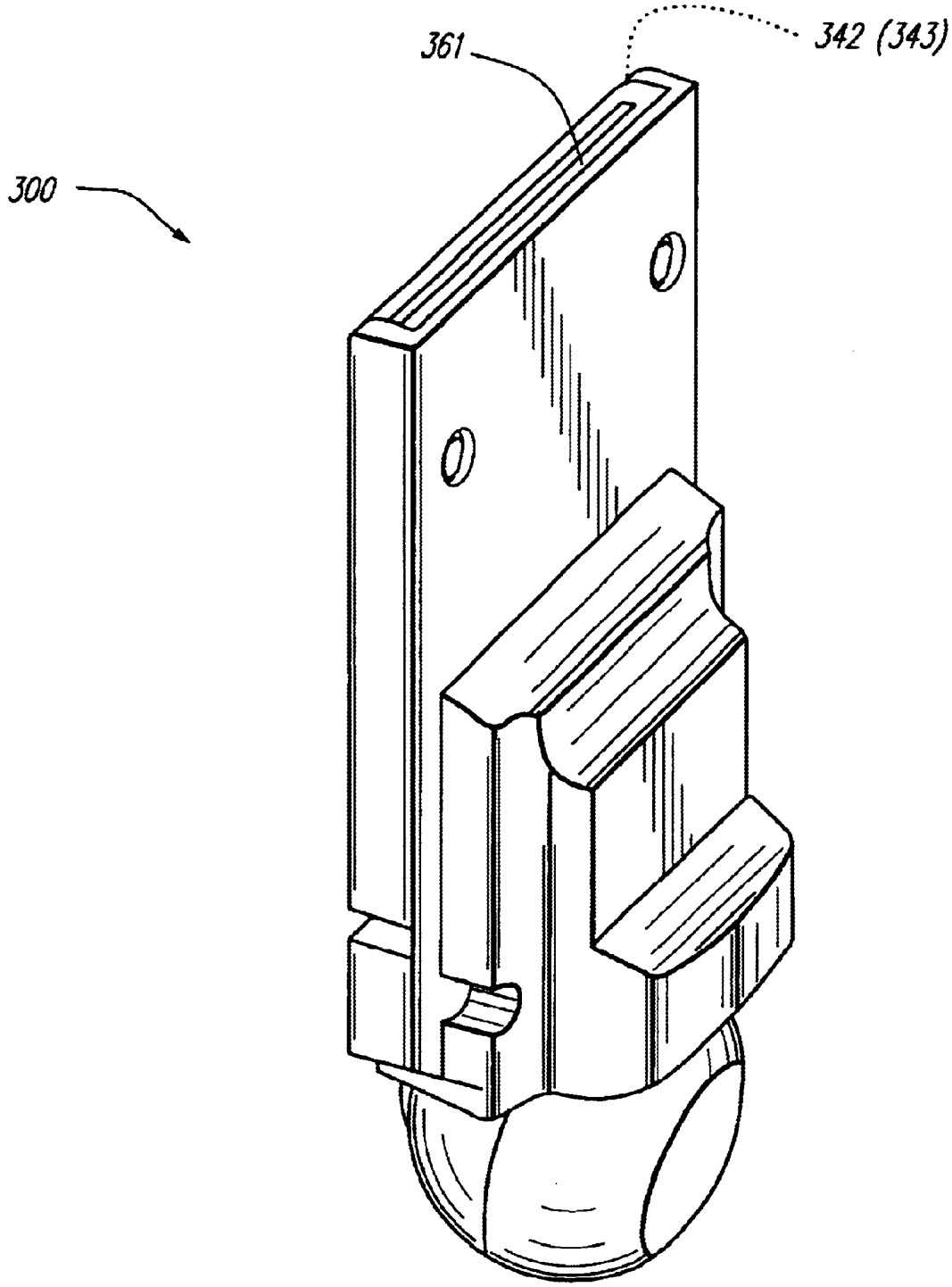

Fig.15

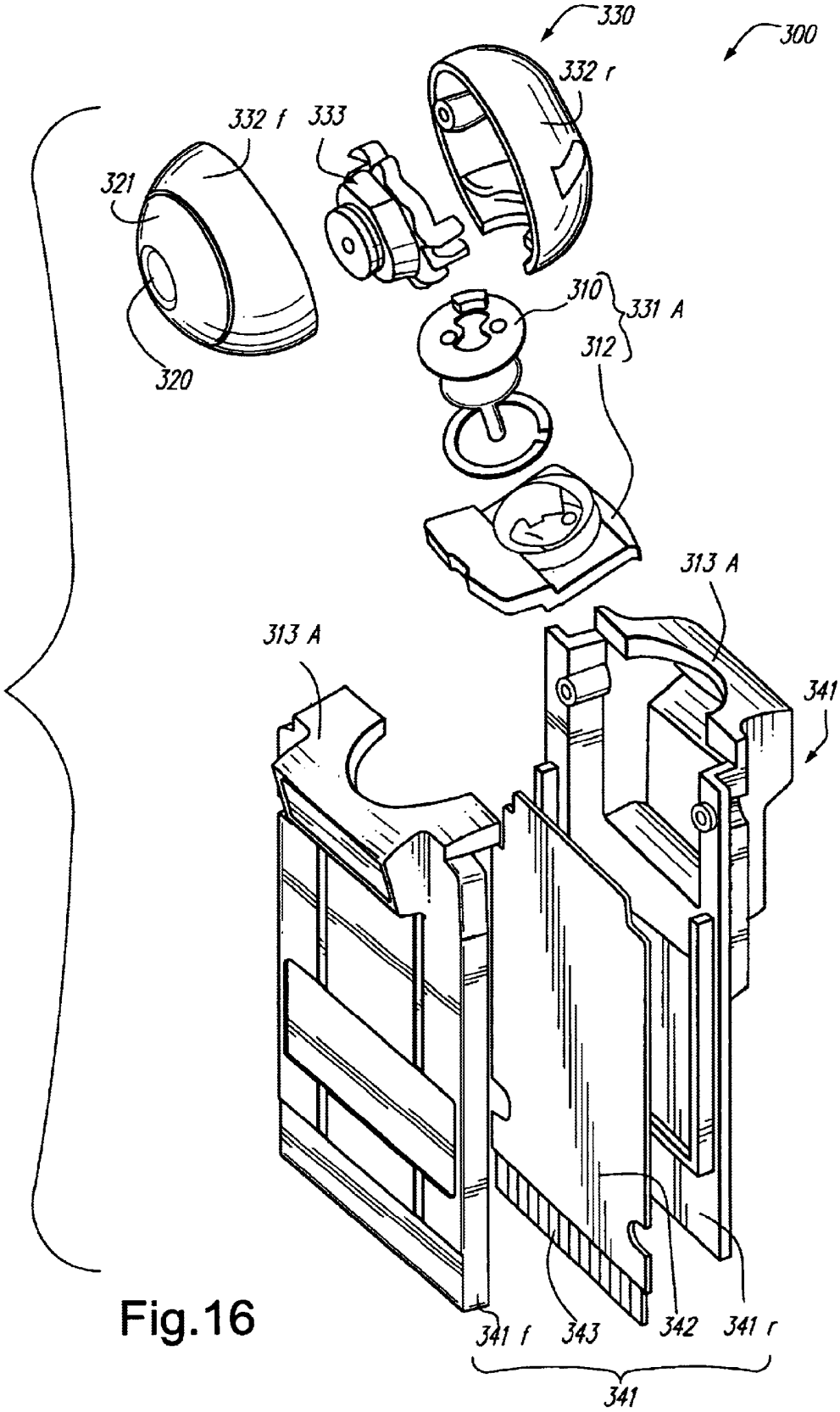
330
300
332 r
332 f
333
321
310
331 A
312
320
313 A
313 A
341
341 f
343
342
341 r
341

Fig.16

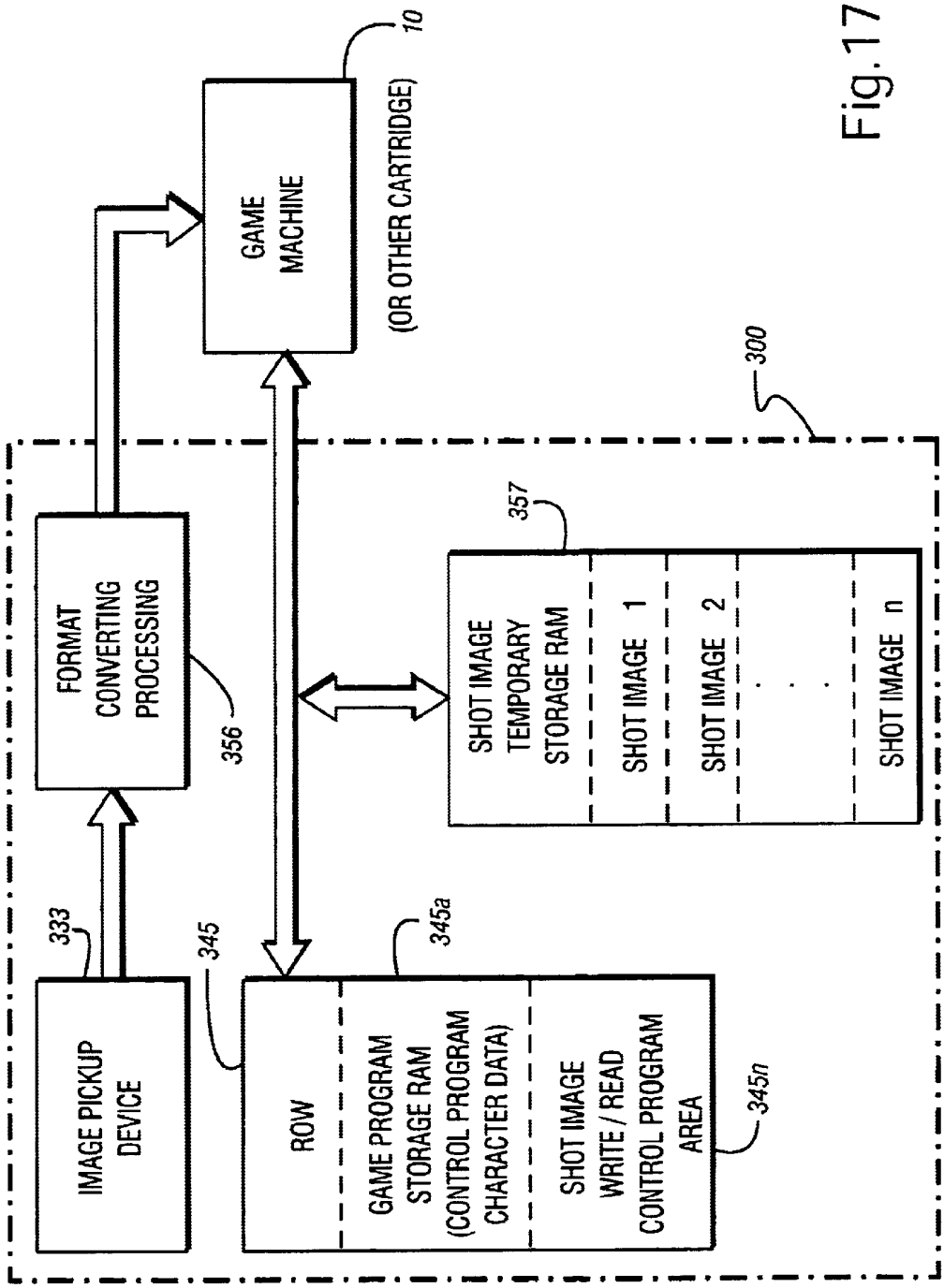
GAME MACHINE
10
(OR OTHER CARTRIDGE)
300
FORMAT CONVERTING PROCESSING
356
357
SHOT IMAGE TEMPORARY STORAGE RAM
SHOT IMAGE 1
SHOT IMAGE 2
SHOT IMAGE n
333
IMAGE PICKUP DEVICE
345
ROW
345a
GAME PROGRAM STORAGE RAM (CONTROL PROGRAM CHARACTER DATA)
SHOT IMAGE WRITE / READ CONTROL PROGRAM AREA
345n

Fig. 17

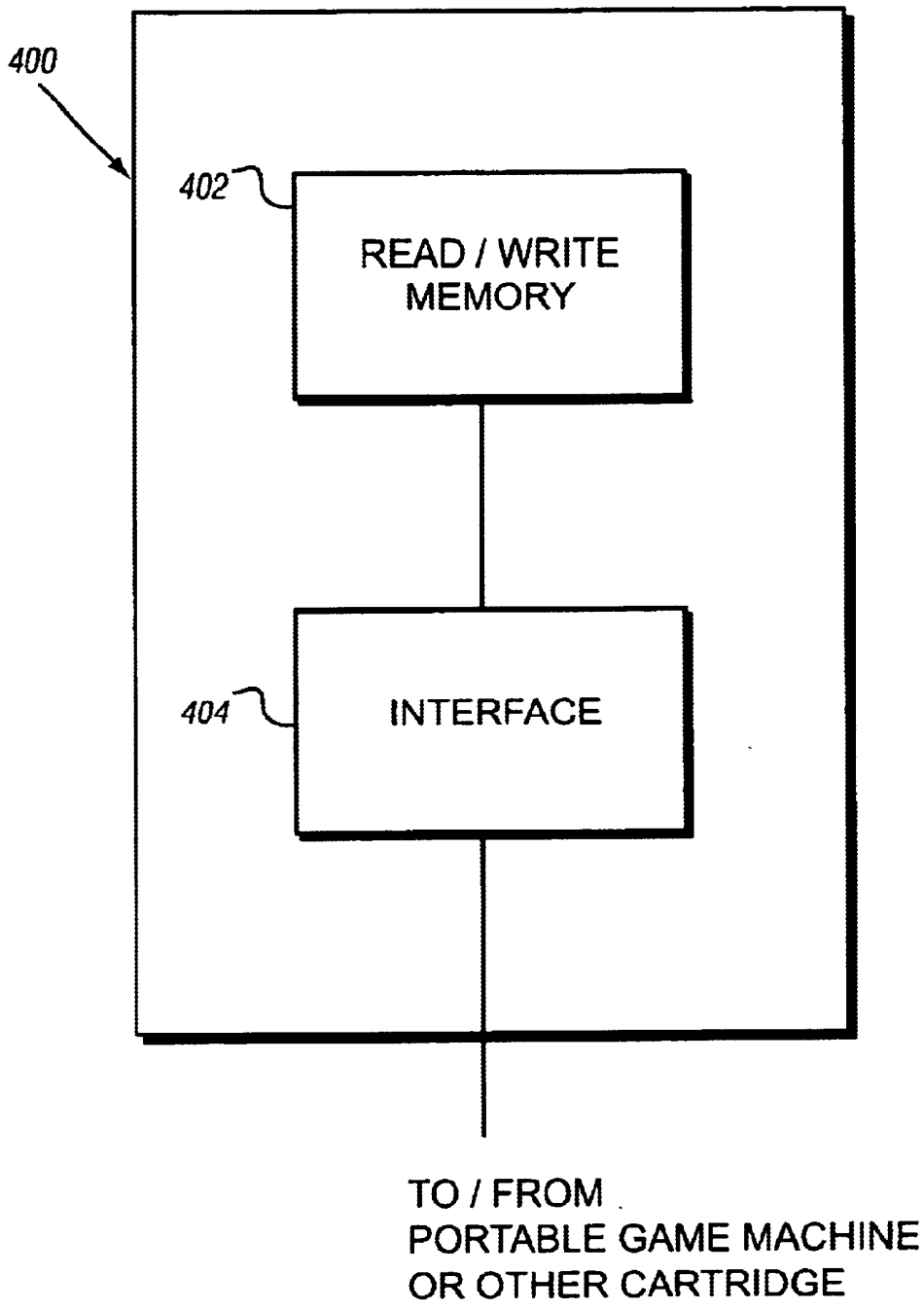
400
402
READ / WRITE MEMORY
404
INTERFACE
TO / FROM
PORTABLE GAME MACHINE
OR OTHER CARTRIDGE

Fig.18

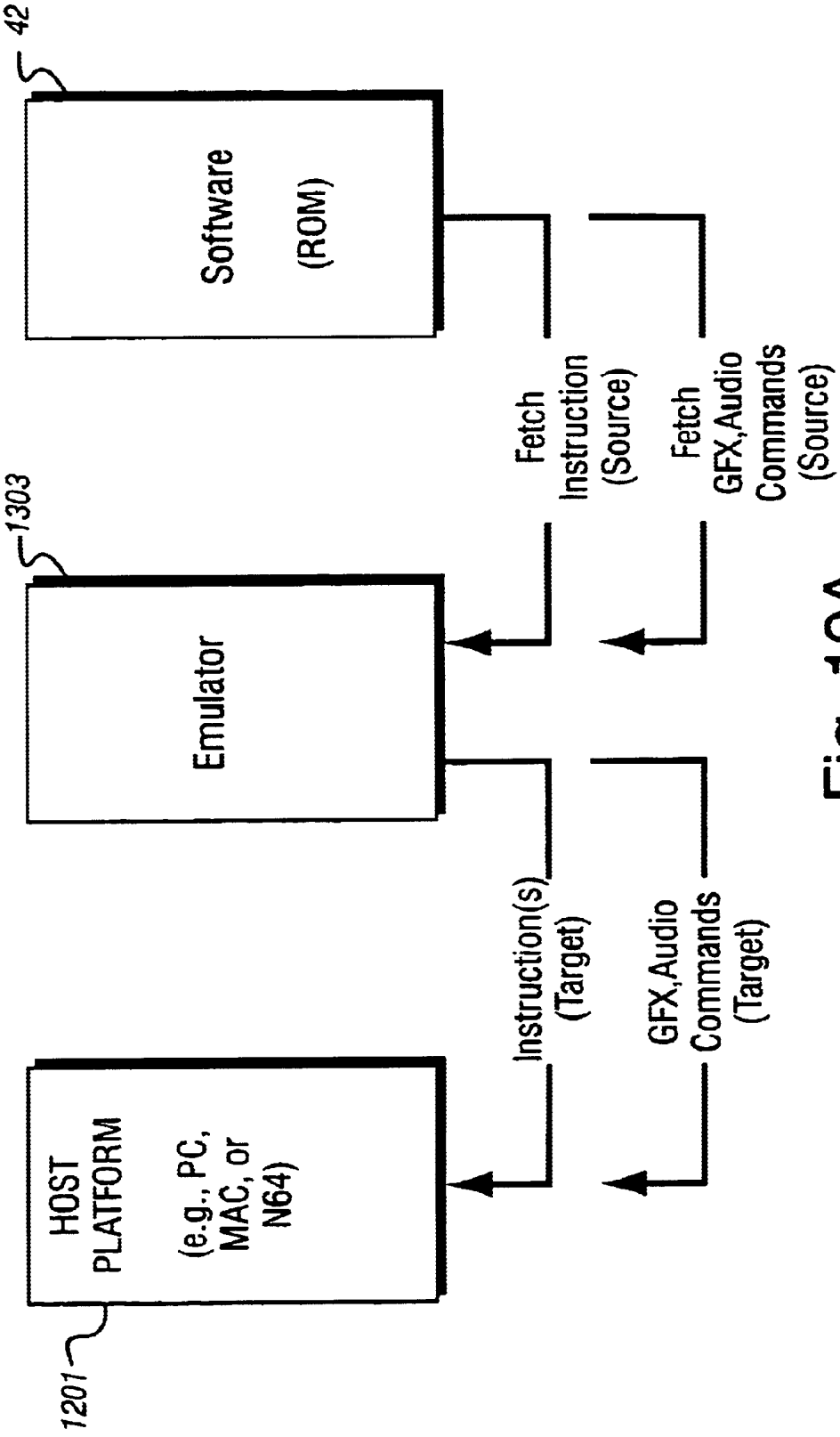
42
Software
(ROM)
1303
Emulator
1201
HOST
PLATFORM
(e.g., PC,
MAC, or
N64)
Fetch
Instruction
(Source)
Fetch
GFX,Audio
Commands
(Source)
Instruction(s)
(Target)
GFX,Audio
Commands
(Target)

Fig. 19A

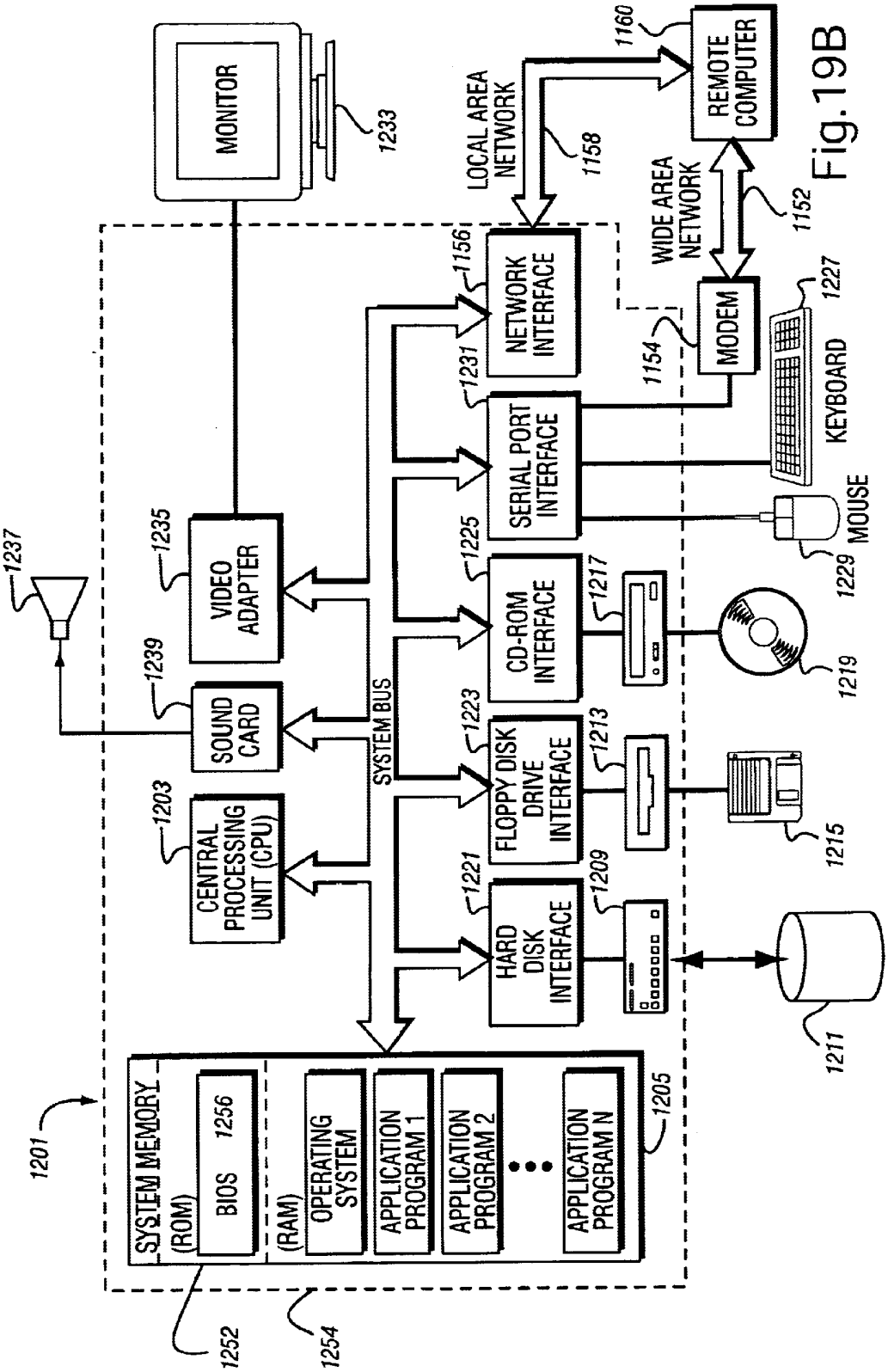
MONITOR
1233
LOCAL AREA NETWORK
1158
1160
REMOTE COMPUTER
WIDE AREA NETWORK
1152
1156
NETWORK INTERFACE
1231
SERIAL PORT INTERFACE
1154
MODEM
1227
KEYBOARD
MOUSE
1229
1237
1235
VIDEO ADAPTER
1225
CD-ROM INTERFACE
1217
1219
1239
SOUND CARD
SYSTEM BUS
1223
FLOPPY DISK DRIVE INTERFACE
1213
1215
1203
CENTRAL PROCESSING UNIT (CPU)
1221
HARD DISK INTERFACE
1209
1211
1201
SYSTEM MEMORY
(ROM)
BIOS
1256
(RAM)
OPERATING SYSTEM
APPLICATION PROGRAM 1
APPLICATION PROGRAM 2
APPLICATION PROGRAM N
1205
1252
1254

Fig.19B

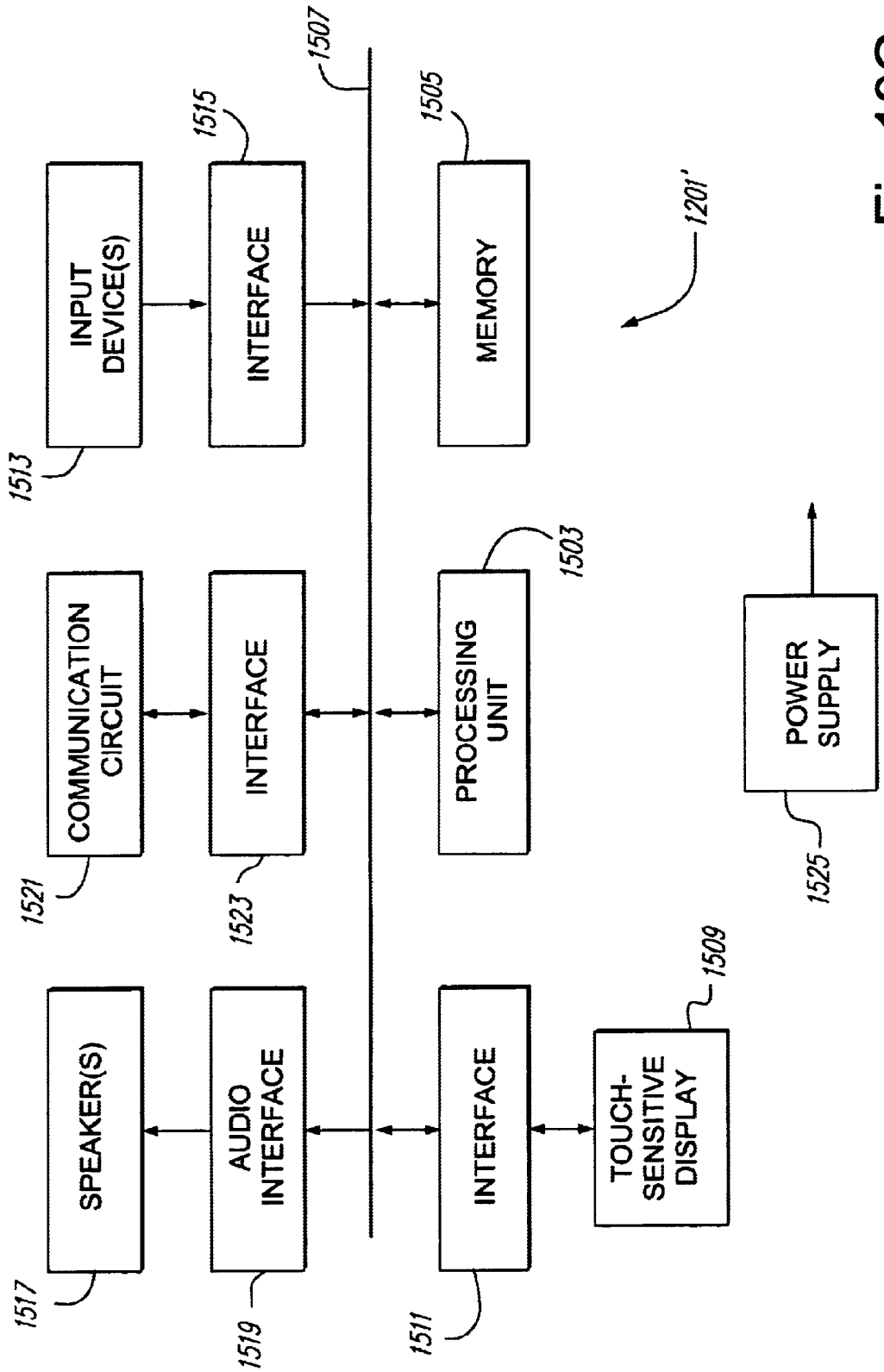
INPUT DEVICE(S)
1513
INTERFACE
1515
1507
MEMORY
1505
1201'
COMMUNICATION CIRCUIT
1521
INTERFACE
1523
PROCESSING UNIT
1503
POWER SUPPLY
1525
SPEAKER(S)
1517
AUDIO INTERFACE
1519
INTERFACE
1511
TOUCH-SENSITIVE DISPLAY
1509

Fig.19C

PORTABLE GAME MACHINE

RELATED APPLICATION

This application claims domestic priority in accordance with the provisions of 35 U.S.C. Section 119(e) from provisional Application No. 60/158,045, filed on Oct. 7, 1999, the contents of which are incorporated herein in their entirety.

FIELD OF THE INVENTION

This invention generally relates to a portable game machine and, more particularly, to a portable game machine that is selectively configurable for one or more different operations such as wireless communications, global positioning, image capturing and combinations thereof.

BACKGROUND AND SUMMARY OF THE INVENTION

Over the years, portable (or hand-held) game machines have been (and continue to be) very popular. Typically, these portable game machines include a hand-held game machine housing a processing unit and associated hardware for running a game program and include a display for displaying images of the game. The game program itself is typically contained in a game program memory such as, for example, a semiconductor memory (e.g., ROM, EPROM, etc.) that is part of a removable cartridge. By storing the game program in a removable cartridge, the user can conveniently and easily change the game being played by simply exchanging one cartridge with another, different cartridge containing a different game. Examples of portable game machines are the "Game Boy®" and "Game Boy® Color" products manufactured and sold by Nintendo of America Inc.

Generally, the functionality of conventional portable game machines of the type described above is directed to executing the game that is contained in the game program memory of a particular removable cartridge. In addition, these game machines are sometimes configured to permit games having a two-player mode to be played. In one such implementation, two portable game machines are connected together by a cable. In another implementation, infrared communications between two portable game machines are used. However, both of these implementations require that the portable game machines be in physical proximity to each other.

Thus, it would be desirable to provide a portable game machine that provides enhanced multi-player capabilities through communications with other game machines, portable or otherwise. It would also be desirable to provide a portable game machine to which game updates, new game levels and new games can be easily communicated and to take advantage of the existing portable game machine hardware and user interface as a basis for additional communications capabilities. It would further be desirable to provide these enhanced capabilities to other gaming systems such as console game machines that are connected to a user's television set.

Thus, in accordance with one aspect of the invention, a pager cartridge is provided for use with a game machine having a game program executing processing system including a microprocessor to execute a video game program and player controls operable by a player to generate video game control signals. The pager cartridge includes radio circuitry configured to receive messages containing video game program instructions transmitted via a paging system, and a

connector that, in use, electrically connects the pager cartridge to the game machine.

In accordance with another aspect of the present invention, a global positioning system (GPS) cartridge is provided for use with a game machine having a game program executing processing system including a microprocessor to execute a video game program and player controls operable by a player to generate video game control signals. The GPS cartridge includes GPS circuitry configured to determine position based on signals received from GPS satellites and a connector that, in use, electrically connects the GPS cartridge to the game machine so that the position determined by the GPS circuitry is usable during execution of the video game program.

In accordance with another aspect of the present invention, a game machine is provided with radio circuitry configured to transmit messages via a paging system and digital camera circuitry configured to capture an image. A user interface enables a user to provide inputs to the game machine and a processing system is operable in response to user inputs to cause the image captured by the digital camera to be transmitted as part of a message via the paging system.

In accordance with another aspect of the present invention, a game machine is provided with radio circuitry configured to transmit and receive messages via a paging system, a user interface enabling a user to provide inputs to the game machine, and a memory for storing message credits. A processing system is operable in response to user inputs to transmit messages via the paging system if sufficient message credits are stored in the memory.

Still other features and advantages of the present invention will become more apparent from the following detailed description when read in conjunction with the accompanying drawings.

BRIEF DESCRIPTION OF THE DRAWINGS

FIGS. **1**A–**1**C show an example portable (handheld) game machine.

FIG. **2** is an overall block diagram of the game cartridge and the game machine shown in FIG. **1**.

FIG. **3** illustrates a portable game machine and a pager selectively attachable to the portable game machine.

FIG. **4** illustrates a two-way paging system in which the present invention may be implemented.

FIG. **5**A and **5**B are block diagrams of example pager cartridges **100** usable in the two-way paging system of FIG. **4**.

FIGS. **6**A–**6**J show various physical configurations of pager cartridge **100**.

FIG. **7** is a conceptual block diagram of an interface for pager cartridge **100** when it is connected to game machine **10**.

FIGS. **8**A–**8**H show various screens that are part of the interface conceptually shown in FIG. **7**.

FIGS. **9**A–**9**C show various screens in PagerWorld.

FIG. **10** is diagram of an example bus multiplexer and address decoder usable in pager cartridge **100**.

FIG. **11**A illustrates sample conversations and FIG. **11**B illustrates sample chat codes.

FIGS. **11**C–**11**N illustrate cards used for symbola.

FIGS. **12**A and **12**B show message cards usable with pager cartridge **100**.

FIG. **13** is a block diagram of a GPS cartridge **200**.

FIGS. **14** and **15** are external perspective views showing the structure of a digital camera cartridge **300**.

FIG. **16** is an exploded view showing the digital camera cartridge **300** of FIGS. **8** and **9**.

FIG. **17** is a block diagram of a digital camera cartridge **300**.

FIG. **18** is a block diagram of a read/write memory cartridge **400**.

FIGS. **19**A–**19**C show example alternative compatible implementations.

DETAILED DESCRIPTION OF EXAMPLE EMBODIMENTS

The present invention is described in the context of example embodiments. However, the scope of the invention is not limited to these particular example embodiments. Rather, the example embodiments merely serve to illustrate various principles and characteristics of the present invention.

FIGS. **1**A, **1**B and **1**C show an example portable (hand-held) color display game machine (hereinafter, referred to simply as "game machine") **10** that displays game characters in color on a color liquid crystal display (LCD) **16** when a color-ready game cartridge **12** is selectively inserted into a slot **18** (see FIG. **1**C). The color LCD **16** displays characters using for example, up to a maximum of 56 colors if the color-ready game cartridge **12** is inserted into the game machine **10**. Game machine **10** may also be configured to receive monochrome game cartridges (not shown) and to display monochrome characters on LCD **16**. Example game machine **10** may, for example, be a GameBoy® Color game machine, although it will be readily recognized that the features described below are readily applicable to other portable game machines.

With reference to FIG. **2**, game machine **10** includes color LCD **16** as described above. Color LCD **16** is formed as a dot matrix display and is driven by LCD drivers **22** and **24** to display color images on its screen. LCD driver **22** selectively drives, for example, the rows of the dot matrix display and LCD driver **24** selectively drives, for example, the columns of the dot matrix display. LCD drivers **22**, **24** are supplied with color image signals from a color display processing circuit **28** included in a central processing unit (CPU) **26**.

CPU **26** further includes a CPU core **30** that is connected to an internal read only memory (ROM) **32** and an internal random access memory (RAM) **34**. Internal RAM **34** is used as a work memory of CPU core **30**. CPU **26** further includes a basic oscillator **36**. Basic oscillator **36** is formed of, for example, a quartz oscillator, and supplies an oscillating signal to a programmable frequency divider **38**. Programmable frequency divider **38** divides the oscillating signal from basic oscillator **36** in accordance with frequency division data from CPU core **30**, and supplies a divided signal as a clock of CPU core **30**.

A connector **40** is connected to CPU **26** by an appropriate bus. Game cartridge **12** shown in FIG. **1** is selectively attachable to connector **40**. Game cartridge **12** is preferably in the form of a replaceable memory cartridge insertable into slot **18** of game machine **10**. Game cartridge **12** may be in the form of a plastic housing that encases a printed circuit board. The printed circuit board has a connector defining a number of electrical contacts. When game cartridge **12** is inserted into slot **18** of game machine **10**, the cartridge electrical contacts mate with corresponding "edge connector" electrical contacts within game machine **10**. This action electrically connects the printed circuit board contained within the plastic housing to the electronics within game machine **10**. In this example, the printed circuit board of game cartridge **12** at least includes a read-only memory (ROM) **42** and a read/write memory (e.g., SRAM) **46**. ROM **42** stores instructions and other information pertaining to a particular video game. ROM **42** for one game cartridge **12** may, for example, contain instructions and other information for an adventure game while the ROM of another game cartridge **12** may contain instructions and other information for a car race game an educational game etc. To play a game, a user of game machine **10** need only plug the appropriate game cartridge into slot **18** of game machine **10** thereby connecting the cartridge's ROM **42** (and other any circuitry it may contain) to game machine **10**. This enables the game machine circuitry to access information contained with ROM **42** (and read/write memory **46**), which information controls the game machine to play the appropriate video game by displaying images and reproducing sound as specified under control of the ROM game program information. Read/write memory **46** is used to store data such as game backup data.

CPU **26** is supplied with operation signals from operating keys **48***a*–**48***e*. Operating key **48***a* is used, among other things, to move a game character displayed on color LCD **16** in four directions, that is, upward, downward, right and left. Operating key **48***b* is a select key that is used for, for example, game mode selection and the like. Operating key **48***c* is a start key that is used to start playing the game or to temporarily stop the progress of the game. Operating keys **48***d*, **48***e* are push-button switches. By pushing operating keys **48***d*, **48***e*, it is possible to cause various motions of the game characters displayed on color LCD **16**, for example, a weapon use, a jump and the like. Operating keys **48***a*–**48***e* are disposed in a forward surface of game machine **10** as shown in FIG. **1**B. Operating keys **48***a*–**48***e* are also usable in connection with various features described below. A key matrix (not shown) is provided for sending CPU **26** the operation signals from operating keys **48***a*–**48***e* as controller data.

Batteries (not shown) (e.g., 2 AA batteries) provide power for game machine **10**. A power indicator LED **19** (see FIG. **1**B) may dim as the batteries lose their charge, thereby providing a visual indication to the user that new batteries are needed. Game machine **10** may also be configured for connection to an AC adapter to permit extended use without batteries.

In accordance with the game program, character data supplied from game cartridge **12** and the controller data from operating keys **48***a*–**48***e*, CPU **26** executes data processing and writes display data into a display RAM **52**, using an extended RAM **50** when necessary. The display RAM **52** has two banks, that is, a first bank and a second bank, and has, as a whole a storage area that is greater than the display area of color LCD **16**, thereby enabling a scrolling display upward and downward and/or rightward and leftward on the screen of color LCD **16**. As a result of the data processing by CPU **26**, sound signals to be output are adjusted in level by volume controls **54** and **56**, and then outputted to a speaker **58** and/or an earphone jack **60**. Sound signals output from speaker **58** and/or earphone jack **60** include game sound effects, voices and music.

Generally speaking, to use game machine **10** to play a game, a user selects a game cartridge **12** containing a desired video game, and inserts that game cartridge into slot **18** of game machine **10**, thereby electrically connecting ROM **42** and other cartridge electronics to game machine **10**. The user then operates a power switch **21** (see FIG. **1**B) to turn on game machine **10** and operates operating keys **48***a*–**48***e* to

control video game play. For example depressing operating key **48***c* may cause the video game to start playing. Actuating operating key **48***a* may cause animated characters to move on color LCD **16** in controllably different directions.

Additional features of game machine **10** may be found in application Ser. No. 09/321,201, filed May 27, 1999, the contents of which are incorporated herein in their entirety.

As will be explained in greater detail, cartridges other game cartridges are insertable into slot **18** of game machine **10**. One illustrative example is a cartridge that houses the elements of a two-way pager. Like game cartridge **12**, the pager cartridge includes a plastic housing that encases a printed circuit board on which is mounted the components of the pager. This printed circuit board of the pager cartridge has a connector defining a number of electrical contacts that mate with the corresponding edge connector electrical contacts within the game machine **10** when the pager cartridge is inserted into the slot of the game machine. This electrical connection between the pager cartridge and the game machine permits the implementation of many advantageous features that will be described in greater detail below.

In an example implementation, the pager cartridge is itself provided with a slot for receiving a cartridge such as a game cartridge. The slot of the pager cartridge is provided with "edge connector" electrical contacts that mate with the electrical contacts of the cartridge inserted therein. In this way, a game cartridge **12** may be "piggy-backed" onto the pager cartridge when the pager cartridge is inserted into slot **18** of game machine **10**. The edge connector electrical contacts of the pager cartridge are connected via a bus to those electrical contacts of the pager cartridge that mate with the edge connector electrical contacts of game machine **10**. In this way, ROM **42** of game cartridge **12** (and any other circuitry game cartridge **12** may contain) is electrically connected to game machine **10** and a user may play the game stored on game cartridge **12** even when the pager cartridge is attached to game machine **10**.

As will be further described below, cartridges including the components of a global position system (GPS), or of a digital camera, or of a read/write memory may also be piggy-backed onto the pager cartridge when the pager cartridge is inserted into the slot of game machine **10**.

FIG. **3** illustrates a pager cartridge **100** that is selectively attachable to game machine **10** via connector **40**. Generally speaking, paging systems are well-known in the art. For example, with reference to FIG. **4**, U.S. Pat. No. 5,805,077 discloses a two-way paging system **101** that includes paging stations **103**, paging terminals **105**, public switched telephone network (PSTN) **107**, paging receivers **109** and a pager **111**. While only two paging terminals **105** are shown, a paging system may include many paging terminals. Likewise, the number of other components of paging system **101** is merely illustrative.

Paging stations **103** are also referred to as base stations or paging transmitters. In operation, callers who wish to page a system user use PSTN **107** to call the system user's pager telephone number. In a system including pager-equipped portable game machines, a computer of the game content provider may be connected to PSTN **107**. Alternatively, pages can be originated through a computer network directly connected to a paging terminal. The call is routed, perhaps through a plurality of paging terminals from PSTN **107** to paging terminal **105** that formulates a page. The page is distributed over a communications network to each of paging stations **103**. Paging stations **103** in turn transmit the page throughout the geographic coverage area of paging system **101**. For example, the page may be broadcast over radio waves on a dedicated frequency. The paging system may operate using any well-known protocol such as Flex, ReFlex (e.g., ReFlex 25) or POCSAG.

If pager cartridge **100** is within the geographic coverage area of paging system **101**, pager cartridge **100** receives the page and processes the message embedded within the page. Generally, pager cartridge **100** also includes a vibrating or beeping mechanism to inform the person carrying the pager that he or she has received a message. Pager cartridge **100** may itself be configured to communicate messages (visually and/or aurally) to the user.

In accordance with one aspect of the present invention, pager cartridge **100** shown in FIG. **4** is provided as a pager cartridge **100** that is insertable into slot **18** of game machine **10**. Pager cartridge **100** is configured to transfer messages received over paging system **101** to game machine **10** when pager cartridge **100** is inserted into slot **18** of game machine **10**. In this case, game machine **10** communicates (visually and/or aurally) the messages to the user. In some cases, the messages relate to game playing aspects of the game machine and such messages are used by game machine **10** to update or modify certain of these game playing aspects as will be described in greater detail below.

In the two-way paging system, pager cartridge **100** is configured to broadcast back to paging receivers **109** an acknowledgment signal that informs paging terminal **105** that the page has been successfully received. Pager cartridge **100** may also initiate other types of messages that are unsolicited and are not acknowledgments for received messages. Various examples of these messages will be described in greater detail below.

FIG. **5**A is a generalized block diagram of one example pager cartridge **100**. Pager cartridge **100** includes an antenna **130** connected to a conventional radio section **132** for receiving and sending messages. While certain features of the system described below utilize the capability of pager cartridge **100** to send messages, it will be apparent that not all features depend on this capability and the present invention is not limited to the use of a two-way pager cartridge. Thus, the present invention contemplates that a one-way pager cartridge may be utilized in some implementations. Notification circuitry **134** provides notification to the user that a message has been received. Notification circuitry **134** may be implemented as a vibration circuit that is controlled by control circuit **136** to vibrate when a message is received. Notification circuit **134** may alternatively or additionally be implemented as a beeper circuit that is controlled by control circuit **136** to beep when a message is received. As suggested, notification circuit **134** may in fact comprise a number of different elements for notifying the user that a message has been received. A user may selectively enable/disable the notification circuit **134** using input circuitry **138**. Control circuit **136** controls a display driver **140** to cause display **142** to display received messages. Display **142** may be a liquid crystal display and may be provided with backlighting, if desired. Because pager cartridge **100** is connectable to game machine **10** for communicating messages, display driver **140** and display **142** may be omitted or simplified. A power supply **144** such as one or more batteries supplies power to the components of pager cartridge **100** requiring power. The connections of power supply **144** shown in FIG. **5** are for illustrative purposes only and the need for power by the components of the pager and the manner of supplying the needed power thereto will be readily apparent to those of ordinary skill in the art. Pager cartridge **100** may also be provided with an indicator (not

shown) for indicating the power supply level, thereby prompting the user when for example, new batteries are needed. Alternatively or in addition, a periodic beep (e.g., every 30 minutes) may be generated and output by speaker **149** when the power supply level decreases below a certain level.

Pager cartridge **100** includes a memory **145** for storing software used in the pager operations, including at least some of the various operations described below. It is of course possible to store the software for implementing at least some of these operations in the memory of game machine **10**. However, storing such software in memory **145** of pager cartridge **100** facilitates use of the pager cartridge with existing game machines. Memory **145** also stores other data such as available message unit data (message credits), persona character data, messages, etc. Memory **145** may be a combination of read/write and read only memory. Finally, memory **145** may store one or more video game programs that are executable by CPU **26** of game machine **10**. Game machine **10** may execute video game programs (including those stored in memory **145**) in accordance with one or more instructions contained in received messages.

Pager cartridge **100** is provided with first and second connectors **146** and **148**. First connector **146** is configured to permit pager cartridge **100** to be selectively attached and electrically connected to game machine **10** via the connector **40** of game machine **10**. In this way, the electronic components of the pager cartridge are accessible to and controllable by CPU **26** of game machine **10** and data (including messages) can be communicated between pager cartridge **100** and game machine **10**. Second connector **148** permits game cartridges, read/write memory cartridges, digital cameras cartridges. GPS cartridges and the like to be electrically connected ("piggy-backed") to pager cartridge **100** and, via connector **146** of pager cartridge **100**, to game machine **10**.

FIG. **5**B is a block diagram of another example pager cartridge **100**. The example pager cartridge of FIG. **5**B includes:

a connector **900**,

a pass-through connector **902**,

a battery (power source) **904**,

a power converter **906**,

a game machine interface **908**,

a mask ROM **910**,

a codec/DSP section **912**,

bandpass filter, RF mixer and dual PLL section **914**,

crystal **916**,

transmitter **918**,

receiver **920**, and

antenna **922**.

Connector **900** connects the pager cartridge to portable game machine **10**. Pass-through connector **902** provides a connection to the portable game machine for game cartridges piggy-backed onto the pager cartridge. This allows CPU **26** of game machine **10** to access game programs stored in the piggy-backed game cartridges so that games can be played even when the pager cartridge is inserted into slot **18** of game machine **10**. Game machine interface **908** interfaces game machine **10** to the communication circuitry of the pager cartridge and the mask ROM **910** of the pager cartridge. Mask ROM **910** stores various programs that are loaded into the main memory map of the portable game machine. These programs are described in greater detail below. Codec/DSP **912** section encodes/decodes and processes messages transmitted and received by the pager cartridge. Bandpass filter, RF mixer and dual PLL **914** section filters and upconverts/downconverts messages transmitted and received by the pager cartridge. Transmitter **916** transmits messages via antenna **922** and receiver **918** receives messages via antenna **922**. Battery **904** provides power for the components of the pager cartridge and power converter **906** converts the power from battery **904** to a level suitable for application to the pager cartridge components. Crystal **916** is used to generate a clock signal usable by bandpass filter, RF mixer and dual PLL section **914**.

Example transmitter **916** has the following characteristics:

Frequency bands: 896–902 MHz

Transmit power—1 watt

Bit rate—9600 bps

Channel spacing—12.5 kHz

Frequency stability—0.5 PPM

Signaling—FSK

Example receiver **918** has the following characteristics:

Frequency bands: 929—941 MHz

Channel spacing: 25 kHz

Bit rate: 6400 bps

Signaling: FSK

Pager cartridge **100** is operable in AWAKE, SLEEP, and OFF modes. In AWAKE mode, full pager cartridge functionality is available. In SLEEP (non-display) mode, pager cartridge **100** has limited functionality, but does operate to receive messages (e.g., marketing information, game information, customer-solicited information, un-solicited information). In OFF mode, pager cartridge **100** is powered down and no functionality is available. The paging system operator (service provider) maintains messages for pager cartridge **100** for a predetermined period of time (e.g., 72 hours). If the user does not place the pager cartridge in the SLEEP mode or the AWAKE mode within 72 hours, the messages will be lost.

FIGS. **6**A–**6**R show various example physical configurations of pager cartridge **100**. FIG. **6**A shows a front perspective view of pager cartridge **100** and FIG. **6**B shows a rear perspective view of pager cartridge **100**. FIG. **6**A shows connector **146** for connecting pager cartridge **100** to game machine **10** and a user interface **163**. As shown most clearly in FIGS. **6**C and **6**D, pager cartridge **100** may be provided with a protective flap **167** that is moveable between an open position (shown in FIG. **6**C) and a closed position (shown in FIG. **6**B). When protective flap **167** is in the open position, a slot **169** is accessible for, in use, receiving game cartridges, read/write memory cartridges, digital camera cartridges, GPS cartridges and the like. FIG. **6**D shows a game cartridge **12** positioned in the slot **169**. By "piggy-backing" a game cartridge **12** onto pager cartridge **100**, a user can use game machine **10** to execute a game program contained on game cartridge **12** even while pager cartridge **100** is attached to game machine **10**. This "piggy-back" configuration also allows for different activities to be performed simultaneously (e.g., paging activities and the playing of games). For example, while a player uses the game machine to play a game contained on the game cartridge, pager cartridge **100** can receive messages such as, for example stock price quotations or sports scores. These messages may be displayed to player during game play (e.g., by a scrolling or overlaying a message (or a "re" line of a message) across display **16** of game machine **10**). Alternatively, an indication (such as a graphical message icon) may be provided on

display **16** of game machine **10** to indicate to the player that a message has been received. The player can then decide, for example, to suspend (or end) game play and view the message. After the message has been viewed, suspended game play may be resumed. FIG. **6**E shows a pager cartridge **100** having the physical configuration shown in FIGS. **6**A–**6**D connected to game machine **10**. FIGS. **6**F–**6**J are wire drawings showing various physical implementations of pager cartridges **100** connected to game machine **10**.

As noted, the "piggy-back" configuration allows a player to play a game contained on a game cartridge **12** while pager cartridge **100** is connected to game machine **10**. In the case in which a read/write memory cartridge is "piggy-backed" to game machine **10** via pager cartridge **100**, game machine **10** can read/write data such as high score data, suspended game settings and the like from/to the read/write memory cartridge. Similarly, in the case in which a digital camera cartridge is "piggy-backed" to game machine **10** via pager cartridge **100**, digital images may be captured by the camera and used by game machine **10** and/or transmitted as a message using pager cartridge **100**. If the digital camera cartridge is configured to capture sounds, these captured sounds may be used by game machine **10** and/or transmitted as a message using pager cartridge **100**. Of course, a separate "sound card" may be "piggy-backed" to game machine **10** via pager cartridge **100**.

Example Operations

A pager-equipped portable game machine may include (but is not limited to) the following features:

- a plug-in two-way pager.
- sending and receiving of alphanumeric pages,
- sending and receiving of e-mail messages,
- receive broadcasts such as news broadcasts,
- allow playing of pager-compatible games (e.g., network games),
- provide real time clock and calendar,
- play mini-games,
- creation of personal persona and
- playing of conventional games.

In accordance with one example, pager cartridge **100** provides a two-way paging device that has the ability to receive messages from other users in the paging system as well as from the paging system operator. The pagers in the system are individually and collectively addressable to and from standard telephones, PC-Internet, facsimile machines and other pagers. Messages from the paging system operator may be sent to all users in the paging system, to certain groups of users in the paging system or to a particular user in the paging system. The system operator messages may be transmitted during off-peak messaging hours (such as night-time) when air time and bandwidth are less of a transmission issue and more cost-effective. The system operator messages may include by way of example, but not limitation, mini-games, special game levels sample games, game tips and hints, system operator information, general game news advertising, and promotional information. Other messages may include e-mail, stock price quotations, sports scores, news updates and customer-requested information (e.g., top movies of the week, top songs of the week).

Apart from traditional paging functions, pager cartridge **100** can be used in game playing. It will be appreciated that the system operator does not necessarily generate the game playing content. The system operator may simply provide the paging infrastructure on a contract basis with the game content provider. The game content provider may be a game marketer a game developer, a game retailer, a game equipment manufacturer, or licensees of any or all of these.

Two illustrative, but non-limiting applications of pager cartridge **100** to game playing are in Multiple User Dungeon (MUD) games and virtual pets. Generally speaking, MUDs are Internet-based on-line exploration and quest games in which an open-ended number of players simultaneously exist in the same game world, sharing experiences and adventures. MUD games exist in all genres, from fantasy to science fiction and all point in-between, and come in countless formats from text-based to fully graphical. Some currently popular Internet MUDs include Ultima Online (Electronic Arts/Origin), Everquest (Sony 989 Studios), Darkness Falls (Gamestorm/AOL/Kesmai) and Cosrin (AOL). While MUDs vary greatly in appearance and content, MUDs generally share the following key components:

- Exploration and adventure
- Chat and community interaction
- Character growth
- Perpetual, dynamic worlds that grow, adapt and change

In one implementation, the user of pager cartridge **100** becomes a player in what will be referred to hereinafter as PagerWorld, a virtual community for the network of all users having pager cartridges **100**. Players are represented in PagerWorld by a "persona character" and it is this character that all other PagerWorld players will see, for example when messages are received. Over time, this persona character will become ever more unique to the particular player. As players interact with other players in PagerWorld (e.g., by sending messages and playing games), players will share the fun and excitement of discovering new items, skills and appearances as their persona characters gain experience.

Players read and send messages from the main PagerWorld screen, this screen serving as "communication central." From this screen, the player can choose a portal and actually step into a nation-wide or world-wide community of other PagerWorld players. PagerWorld is the hub for communications, becoming a central meeting place to find friends and share messages. Visually, it can be thought of as a carnival midway where players walk their persona characters in a world featuring attractions and sideshows. Players can find pen-pals, view message boards, check high-score lists and play games with others. PagerWorld also contains games and quests with prizes for victorious persona characters.

Via downloads from the system operator at regular intervals, new areas of PagerWorld may open, revealing new games and quests. Players can explore new lands and find items or powers for their persona characters that will be unique to them. PagerWorld can be implemented in a manner that emphasizes the growth and daily care of a player's persona character. The player can care for his/her persona character as he/she would care for a virtual pet, as well as participate with others to improve the skills and add to the virtual possessions of the persona character.

FIG. **7** is a conceptual block diagram of an interface for pager cartridge **100** when it is connected to game machine **10**. Turning on pager cartridge **100** when it is connected to game machine **10** takes the player to a main PagerWorld screen **200**. This screen is the starting point for every user session. First, the player is greeted by his/her persona character. The representation of the persona character may be present on each screen throughout the session. The persona character may in fact be the featured element on the screen and function as a sort of "pager" tour guide.

FIG. **8**A shows an illustrative, but non-limiting, implementation of the main screen **200**. Along with the player's persona character **202**, main screen **200** includes a dialog

box **204** informing the player about the number of incoming, unread messages and other status indicators and four icons **206**, **208**, **210** and **212**. Icon **206** ("My Persona") is a face; icon **208** is a book ("Pager Lingo"); icon **210** is an unopened envelope ("Message Center"); and icon **212** is a globe ("PagerWorld"). These icons provide the player four choices.

Selecting book icon **208** (e.g., via appropriate manipulation of one or more of operating keys **48***a*–**48***e*) brings the user to a screen **220** shown in FIG. **8**B. Screen **220** permits the user to review their dictionary of words and symbols. Players can trade word symbols, build phrases and decode messages. This "personal language" is important to communication between players of PagerWorld. Players can create encoded messages as well as use symbols to represent entire phrases, hence streamlining their messaging and reducing message costs. Icons **222** and **224** permit the user to create associations between words/phrases (e.g., phone) and symbols (e.g., ☎. The symbols may, for example, be symbols obtained from messages, from the memory of the game machine or from a read/write memory cartridge or a game cartridge piggy-backed onto pager cartridge **100**. The words or phrases may be generated using, for example, a virtual keyboard displayed on display **16** of game machine **10** and selections made using one or more of operating keys **48***a*–**48***e*.

Selecting an unopened envelope icon **210** brings the user to a screen **230** shown in FIG. **8**C. Screen **230** is the "Message Center" and permits users, among other things, to read their messages and to compose and send new messages. The Message Center screen features a window **232** that lists unread messages. Selecting a message takes the user to a Read Message screen **250** shown in FIG. **8**D. Message Center screen **230** contains four icons: a File Cabinet icon **234**; a Quill icon **236**; an Address Book icon **238**; and an Account Meter icon **240**. Selecting File Cabinet icon **234** takes the user to a File Cabinet screen **270** shown in FIG. **8**E; selecting Quill icon **236** takes the user to a Compose Message screen **290** shown in FIG. **8**F; and selecting Address Book icon **238** takes the user to an Address Book screen **309** shown in FIG. **8**G.

Account Meter icon **240** is a graphical representation of the user's account balance. As messages are sent, this meter will decline. As new message time ("airtime" or "message credits") is purchased (as will be described in greater detail below), the meter will increase accordingly. Of course, the meter is but one way of displaying data indicative of the user's account balance and it will be apparent that other textual and graphical representations may be used. A graphical or textual reminder to obtain additional message credits may be generated on display **16** of game machine **10** when the user's account balance decreases below some predetermined amount.

Read Message screen **250** is shown in FIG. **8**D. When a message is selected from Message Center screen **230**, the contents of the message appear, along with the user's persona character and "handle" of the person that sent the message. Throughout the Message Center operations, the displayed icons generally remain consistent. However, when a user accesses Read Message screen **250** to read a message, a Trash Can icon **252** also appears. Trash Can icon **252** allows users to discard messages they do not wish to keep. The system may, if desired, be configured to provide a message archiving feature in which a user may archive messages to a read/write memory cartridge piggy-backed into pager cartridge **100**.

File Cabinet screen **270** is shown in FIG. **8**E and is similar in appearance to main Message Center screen **230**. File Cabinet screen **270** displays a list of saved messages. In some implementations, the saved messages may be organized by topic. Selecting a message opens up the message in Read Message screen **250** of FIG. **8**D.

Compose Message screen **290** is shown in FIG. **8**F and permits a user to construct a message by choosing letters or by selecting symbols from his/her dictionary of lingo symbols using icons **222** and **224**. As noted above, letters may be chosen using a combination of a virtual keyboard displayed on display **16** of game machine **10** and user inputs via operating keys **48***a*–**48***e*. A "Send To" window **292** allows the user to choose to whom the message will be sent. Users can type in another user's handle or choose from the listings in their address book. A "Send Message" icon **294** also appears and allows the user to send the composed message using the radio circuitry of pager cartridge **100**.

Address Book screen **309** is shown in FIG. **8**G and provides a listing of other users by their handles. Next to each handle is the persona character of the other user as it appeared on his/her last communication with the user.

With reference again to Main Screen **200** shown in FIG. **8**A, choosing Face icon **206** takes the user to a "My Persona" screen **330** shown in FIG. **8**H. Here, a user may customize his/her persona character to his/her liking. A Bag icon **332** may be selected to show the user his/her inventory of items that can be purchased or discovered on mini-adventures. A Coin icon **334** shows the number of coins that the user has collected over time. The system also includes a "Handle Maker" option that permits a user to alter their face (i.e., hair, node, eyes, mouth, etc.). This capability may be implemented so that it can be accessed only at "boot-up" or it may be implemented so that it is accessible at all times via the interface. The player can simply choose what items he/she would like to be wearing and how he/she would like his/her persona character to look. As the persona character gains experience, hence coins and possessions, its look will become ever-more customized. Any time the user sends a message, his/her persona character appears alongside the message on the other user's screen. It is even possible to customize the persona character using image data obtained with a digital camera cartridge.

Again with reference again to Main Screen **200** shown in FIG. **8**A, selecting Globe icon **212** from Main Screen **200** transports the user's persona character into PagerWorld. The implementation shown in FIGS. **9**A and **9**B is a top-down view into a city in which the player can freely roam. At the center of PagerWorld is the "Midway." The Midway is a stretch of road that features several buildings. Players can move their persona characters through PagerWorld using operating keys **48***a*–**48***e*, for example and enter buildings freely. Illustrative, but non-limiting examples of buildings that may be included in PagerWorld include:

- The Newscenter—This building permits a player to view news from the service provider and to customize the amount and/or type of news downloaded to the pager cartridge by the system operator for example, each night.
- The Hub—This building is a place to learn the names of other players and strike up a pen-pal communication.
- The Store—This building permits the player to purchase various items for the persona character such as hats and clothing.
- The Gaming Center—The building permits players to meet and play games, view high scores, etc.

As noted, this list of buildings is intended to be illustrative, not limiting. The full design of PagerWorld will generally incorporate many other elements to take full advantage of the system in order to create a community feel.

At regular intervals, PagerWorld is updated. In one implementation, these PagerWorld updates are communicated to pager cartridge **100** via night-time downloads when pager cartridge **100** is in SLEEP mode. When this occurs, new areas are made available for the player to "adventure" within. These side-quests or mini-adventures allow players to explore in order to collect coins and acquire unique items and skills. These new areas may become a permanent part of PagerWorld or may be available for limited periods of time (e.g., one week, one month, etc.).

The game design for the mini-adventure may take the form of stand-alone RPG/adventure and a series of transmissions in the form of "choose-your-path" multiple-choice decisions. The player moves through the new areas in search of the proper path to the best possible ending, with their decisions shaping how the adventure unfolds.

For example, suppose when a player of PagerWorld wakes up and connects pager cartridge **100** to game machine **10**, he/she is informed by a message that the "Haunted Castle" is now open in PagerWorld. Upon entering PagerWorld using the above-described interface, the player would notice that a new pathway had opened up, leading straight to a spooky tower on the outskirts of the midway as shown in FIG. **9**C. During the course of the adventure, the player might encounter a fire monster that stands before a critical juncture. The action taken by the player at this point may depend on the situation and the experience of the persona character (e.g., does the persona character possess a water sword to slay the beast?). Depending on these factors, the player may control his/her persona character to fight, flee or use some item in the player's possession. The player makes a choice and sends it back to the system operator via pager cartridge **100** in the form of a message. The consequences of the player's decision are sent back in a message from the system operator via pager cartridge **100** and the adventure continues. Each adventure generally comprises a predetermined number of messages between the player and the system operator (e.g., 8–10). There are several possible endings, some yielding coins, others yielding items or other surprises. The adventures may also incorporate the following illustrative, but non-limiting, ideas:

- A limited number of the "best awards" per new adventure (e.g., only 20 players will win the special item)
- Teamwork-based adventures requiring input from multiple players with complementary skills
- Tile-based worlds require small downloads. The tiles already exist within pager cartridge **100** or game machine **10**.
- Additional "adventure paks" could be sold, containing new tile sets, sounds and item graphics.

When the portable game machine and the attached pager cartridge are turned on, the main PagerWorld screen **200** is displayed. The users can then go to different places (i.e., send a page, read news, play games) as described above. In an example implementation using the page cartridge shown in FIG. **5**B, these programs are stored in ROM **910**. The programs and their I/O portions are loaded into the memory map of portable game machine **10** so as to be accessible to CPU **26** of portable game machine **10**. Game machine interface **908** interfaces between pager cartridge **100** and portable game machine **10**. When a game cartridge is piggy-backed onto pager cartridge **100**, users can play the game independently via pass-through connector **902**. This capability may be provided using a switching mechanism that enables appropriate communication of signals between portable machine **10** and the game cartridge when the game cartridge is piggy-backed onto pager cartridge **100**. An example of such a switching mechanism that includes a mode control circuit **990**, an address decode circuit **992** and a bus multiplexer **994** is shown in FIG. **10**. During game play using a non-pager-compatible game cartridge, if pager cartridge **100** receives an incoming message, the user is notified. The users can then retrieve the message by disconnecting the game cartridge from pager cartridge **100**. During game play using a pager-compatible ("pager-aware") game cartridge, incoming pages may be processed or responded to immediately.

Example Intervention

The portable game machine equipped with a pager cartridge as described above has the ability to wirelessly intervene in a video game either by result of a player solicitation or an unsolicited action from another player (using a similar pager-equipped portable game machine) on the fly—wherever the portable game machine is operational. Because is a "message" is not real-time, but delayed time, the interventions are magical, fun and, by nature, unpredictable. Interventions allow players to equalize skills in games, making games more competitive. Interventions can be solicited or unsolicited. An illustrative solicited intervention is a player requesting help from a friend playing the same game. A player could, for example, request a ladder to climb a wall to gain a prize or level or request more ammunition to fight enemies. An illustrative unsolicited intervention is multiple players playing the same game and sending "messages" to each other to disrupt game play and slow competitors down. A player could, for example, destroy a bridge that a heroic game character must cross to rescue a princess (thereby forcing another player to use another route). A player could blow up an ammunition dump, depriving a competitor of ammunition needed to win a battle (forcing the competitor to change game tactics in order to survive).

The element of consequences to a solicitation adds additional intrigue for users players have to determine the value of what they will get for what they must trade in. Solicited interventions may, for example, have a consequence (or cost) associated to it. For example, if a player requests a ladder, the player could trade an item for the ladder or give up coins. In the case of unsolicited interventions, a game can have hidden "supplies" available only for interventions in order to add more fun, complexity and mystery to the game. To discourage abuse, game supplies could be restricted to a quota of interventions per level or game to reduce messaging costs to player.

The use of intervention requires that players know each other's address and are playing the same game. Typically, this is relatively simple for users to coordinate. Games may be provided with built-in capabilities to send and receive interventions from pager-equipped portable game machines even though they may be great distances from each other. Similarly, this technique could be used in "guest" games, where players may be blind to each other. They would have to identify each other by address in order to play. This could be accomplished by a bulletin-board service and player sign-up roster. Additionally, a game content provider could intervene in games automatically by having background pager messages generated by players during game play that are sent to the game content provider. These messages would result in a "tactical" return message from the game developer that would "magically" modify their game. This element of surprise can be challenging, fun and rewarding for players. To avoid unwanted message charges that might result from such background messages, the user is preferably permitted to enable/disable this capability and/or to set some limit to the number of such messages that is generated

during game play. This limit may be on a per game basis (e.g., 10 total background messages for the game), a per game level basis (2 background messages for each level of the game), a per game playing session basis (e.g., 2 background messages each time a user plays the game) or a real time basis (e.g., 3 background messages per week).

Example Embedded Game Codes and Tactics

Embedded game codes, characters and information provide opportunities for outside assistance, changes and actions. The result is features that extend game longevity, add to player enjoyment and increase playability.

Player Identification/Address

Pager compatible games played with pager-equipped portable game machines may be configured to automatically capture a player's address and persona information. The ability to capture and transmit a player's address and persona information can enable communications (e.g., to and from other players, to and from a game content provider, etc.) that are (or appear to be) on an individual basis.

Moves

Programmers can embed special moves and items that can only be activated by "messaging" and expand game play options. These special move/items will have value that could increase game scores or other rewards. This option can replace or supplement traditional game codes that are normally posted in guide books and web sites. For example, special messages from a game content provider may activate special desirable/undesirable moves or items encouraging players to leave their pagers on overnight to receive the "mysterious" special messages.

Levels and Paths

As with moves, new levels and paths can be secretly stored to enhance game play, increase scores and rewards. Levels could be activated by messages from a game content provider.

Characters

Programmers can build in secret characters that can only be turned on by a message from a game content provider. These characters, after activation, could be captured and traded to other friends between pager-equipped portable game machines or by a game link cable. The new characters could have special powers to help players overcome obstacles in the game. For example, to gain access to levels or get important game information, users could use a special character. When the user tries to access this level without the special character, a message may appear in either a hint or riddle to indicate to players that they must obtain and use the special character to gain access.

Auto-Messaging

With the ability to capture user information, as players play their pager-compatible games, background messages could be sent to a game content provider or to other players as they progress through the games. If such messages are sent to a game content provider, the game content provider could respond uniquely and directly to players. This creates opportunities for the game content provider to intervene appropriately at various stages of the game to insert changes, tasks or characters and to enhance game play. Two or more people playing the same game could have different game experiences at the same time.

As mentioned above, to avoid unwanted message charges that might result from such background messages, the user is preferably permitted to enable/disable this capability and/or to set some limit to the number of such messages that is generated during game play.

What Next?

This feature provides an opportunity or ability for players to request help from a game content provider. This is essentially an on-line "help" option—and at the end of the game, users would see if they finished without getting any help at all. For example, a "Help" sign post could exit throughout (or at certain times during) a game. When the user clicks on the "Help" sign post, they could get information about the best route to follow, how to defeat the enemy, etc.

Randomly Hidden Collectibles

Hidden collectibles can be put into the game that are activated by messages, both solicited and unsolicited. These could be traded with friends and competitors. Some collectibles could be dangerous to game play, others beneficial. A random (or seeded) process may be used for the characters. Thus, not all game would have the same capability to receive characters or adventures. This would encourage players to message other players to receive or get rid of desirable/undesirable collectibles. This enables the creation of a wireless trading community—users could trade information across a room or across a state.

The use of embedded codes characters and information offers a unique opportunity for game content providers to create value-added entertainment in games, thereby enhancing the enjoyment of games by the players. Hidden collectibles also add a wireless dimension to trading and collecting. A game's life can be extended and repeat experiences avoided by adding new activities, characters and levels into games. The element of surprise, and communications with other players and the game content provider, helps players become involved in the gaming experience by maintaining a high level of enjoyment and challenge.

The use of embedded codes is also applicable to modem applications. However, the use of such codes with a pager-equipped portable game machine offers a spontaneous—across the room to across the nation—interactive gaming experience. A modem hook-up requires the portable game machine (an inherently portable device) be treated as a hardwired product. The pager-equipped portable game machine described herein does not have such limitations. It can be used almost anywhere, keeping the game machine portable all the time.

Messages

The system also enables bidirectional transmission of messages with images and sound bytes to other pagers in the network using, for example, a digital camera cartridge in combination with a pager cartridge. The image and sound data may be compressed/decompressed in accordance with well-known compression/decompression techniques to more effectively utilize the available bandwidth.

Libraries of words, phrases sound bytes and standard graphic elements (e.g., hearts, spades, a boat) supplemented by user-generated custom libraries of words, phrases and graphics add to the speed ease and fun of messaging by introducing emotions and images into "conversations". FIG. **11**A illustrates examples of conversations using pagers in accordance with the present invention. It can be seen that by using "coding", the length of the messages may be reduced. Since message charges are generally based on the number of characters in the message (by way of illustration, not by way of limitation. $0.0625 for 10 characters), the use of coding to reduce message length can reduce message charges. FIG. **11**B illustrates sample chat codes. Again, it can seen that the use of some of these chat codes reduces the number of characters in a message, thereby reducing message charges.

The codes may be used to develop a "language" and to create a "grammar" for that language. The language and/or grammar may be unique to two users or two some small group of users and permits communication of messages that

will only be understood by the users with knowledge of the language and grammar. One way of developing this language and/or grammar is using symbola as will be explained in greater detail below.

FIGS. **11**C–**11**E show examples of symbola on cards that may be distributed or sold (e.g., at retail outlets) to those wishing to communicate using symbola. It is also possible to generate "on-line" cards that may be downloaded and printed out using a user's personal computer. To enhance collectability or desirability, the cards may be provided with themes (e.g., Western. Asian, Ancient Egypt etc.) or other graphics. The card of FIG. **11**C shows an upwardly directed arrow that means "You"; the card of FIG. **11**D shows an ear that means "Ear" or "Hearing"; and the card of FIG. **11**E shows a downwardly directed arrow that means "Me" or "I". The cards can be viewed as constituting part of a symbola dictionary.

Certain symbols may be added to each of the symbola to change or vary its meaning. For example, these added symbols may make the symbola an adjective or may make the symbola indicative of a feeling, an action and the like. Examples of such added symbols are shown in FIGS. **11**F–**11**H. With reference to FIG. **11**F, positioning a star (*) at the upper left corner of the upwardly directed arrow changes the meaning of "You" to "Your" or "To You". With reference to FIG. **11**G, positioning a star (*) at the upper left corner of the ear changes the meaning of "Ear" or "Listen" to "To Hear" or "To Listen". With reference to FIG. **11**H, positioning a star (*) at the upper left corner of the downwardly directed arrow changes the meaning of "Me" or "I" to "Mine" or "To Me". Each of the cards shown in FIGS. **11**F–**11**H provides examples of messages that include one or more of the symbols shown on the cards. For the example cards shown in FIGS. **11**F–**11**H, the messages are "Listen Your Heart" and "I hear you". It will be apparent that other symbols may be positioned around the symbola to change or vary the meaning of the symbola. For example, a question mark (?) positioned at the upper right corner of the symbola may indicate "sounds like".

The meaning of a symbola may also be determined by its color. FIGS. **11**I–**11**K show cards that illustrate symbola for the words "light", "she" and "he", respectively. FIGS. **11**L–**11**N show cards that illustrate how the meaning of the symbola for "light", "she" and "he" can be changed by changing the color of the symbola. Thus, with reference to FIG. **11**L, the symbola in the card of FIG. **11**I means "light", "idea" or "smart" if the color of the symbola is yellow, light blue or red, respectively. With reference to FIG. **11**M, the symbola in the card of FIG. **11**J means "she". "hers" or "female" if the color of the symbola is pink, dark blue or red, respectively. With reference to FIG. **11**N, the symbola in the card of FIG. **11**K means "he". "his" or "male" if the color of the symbola is pink, gold or purple respectively.

In the pager cartridge of FIG. **5**B, the symbola may be stored in ROM **910**. Some or all of the symbola may be available for use at all times. In certain cases, stored symbola must be activated by, for example, the entry of a particular activation code. This code may, for example, be provided on the scratch-away portions of the cards shown in FIGS. **11**F–**11**H and FIGS. **11**L–**11**N. Entry of these codes may activate the symbola and/or may activate the symbols used to vary or change the meaning of the symbola. In other implementations, the entry of the activation code can initiate a pager message to the game content provider that requests transmission of particular symbola to be added to the already on-board symbola. The game content provider then transmits a message (or messages) that communicates the requested symbola to the pager cartridge and the symbola are stored in a read/write memory of the pager cartridge from where they are accessible by the user to compose messages.

Message Cards

Pager cartridge **100** may be pre-configured with a certain account balance (expressed either as a particular number of message units or a particular amount of money), thereby permitting a player to use pager cartridge **100** immediately after purchase. An activation routine via one or more messages communicated between the system operator and the player's pager cartridge may be implemented so that the pager cartridge's unique hardware identification is logged into the system. Upon a successful execution of the activation routine, pager cartridge **100** operates immediately without any paperwork, advance payments or commitments on the part of the player.

As players send messages, the message meter (message credits) is automatically decremented. The amount that the meter is decremented is generally based on the length of the messages that are sent. When the pager cartridge message meter approaches empty, players are alerted (e.g., by a visual message) that their message meter must be refreshed.

In one implementation a player may refresh or add to the account balance by purchasing message cards such as a message card **400** shown in FIGS. **12**A and **12**B. The message card may be sold at retail outlets and has a particular card value (e.g., $5.00). The player scratches away portion **402** of message card **400** to expose a uniquely encrypted number. Generally speaking, while the particular application of cards having scratch-away portions that reveal numbers, graphics, etc. for providing message units for a pager cartridge is believed to be novel, cards having scratch-away portions are known and available from for example, Scientific Games. The player then enters the number or other code into pager cartridge **100** (e.g, via a virtual numeric keypad displayed on display **16** of game machine **10**). This number or other code (or some data derived from this number) is then sent as part of a message to the system operator. The system operator logs the particular card as used so that it may be voided in the master inventory of cards. If an appropriate acknowledgment is received by pager cartridge **100** from the system operator in response to this message, the account balance within pager cartridge **100** is then set to a level equal based on the card value, plus any existing account balance. As mentioned above, the system operator does not necessarily generate the content communicated using the pager system and thus may not be the seller of the message cards. Thus, for example, the seller of the message cards may make an arrangement with the system operator to provide the various services described herein. In this case, it is possible that the master inventory of message cards may be maintained by the card seller and, in this case, provision would be made for communication between the system operator and the card seller in order to log particular cards as used.

In still another implementation a reader or scanner for reading credit card information or information on a message card (e.g., a magnetic strip or bar codes) may be used to increment an account balance.

The message cards may be designed as collectibles by providing them with certain graphics or other indicia.

Of course, other methods of incrementing the account balance of pager cartridge **100** may be implemented. For example, a player (or the player's parent, guardian or relative) might provide the system operator with credit card information (via telephone, facsimile, e-mail or regular mail,

for example) and the system operator may generate a message including account balance "credit" data for incrementing the account balance. In some implementations, the player (or the player's parent, guardian or relative) might have a contract with the system operator that provides for a certain amount of credit to be periodically added to the account balance (e.g., monthly) via messages sent from the system operator. In other implementations, players may receive "frequent message units" as an award for reaching certain predetermined message unit levels or even for achieving certain levels in game play. Frequent message units may also be provided in connection with other purchases much like frequent flier miles are awarded for using credit cards. Thus, for example, a player who stays at a particular hotel for a certain number of nights may be awarded a certain number of message units that are usable for incrementing the player's account balance. Of course, even in these arrangements, message cards may be used to supplement the account balance and it would still be possible for a player to use pager cartridge **100** without entering into a contract with the system operator or signing up for a frequent message unit program.

Still another technique for incrementing a player's account balance involves the purchase of a message card that has a two-part number or code. The card retailer communicates the first part of the number or code to the system operator via, for example, the Internet, a direct phone connection, etc. The user subsequently enters the second part of the number or code into pager cartridge **100** by, for example, a virtual keypad displayed on display **16** of game machine **10** and the appropriate manipulation of operating keys **48***a*–**48***e*. This number or code (or some data derived from the this number or code) is communicated to the system operator as part of a message from pager cartridge **100**. If an appropriate acknowledgment is received by pager cartridge **100** from the system operator in response to this message, the account balance within pager cartridge **100** is then set to a level equal based on the card value, plus any existing account balance. The two-part code or number reduces the number of digits or characters that must be entered by the user of the pager cartridge and therefore simplifies the user operations involved with incrementing the number of message credits stored in the memory of pager cartridge **100**. In this particular technique, the first part of the number or code may be encoded as a bar code printed on the message card or may be encoded onto a magnetic stripe formed on the message card. The second part of the number or code may be revealed by scratching away a scratch-away portion of the message card. In this way, the message card retailer can user a bar code reader or a magnetic stripe reader to obtain the first part of the number or code, thereby simplifying the retail process.

Pager cartridge **100** is also configured to receive messages that turn off (disable) the cartridge and/or prohibit or limit access to certain features such as PagerWorld. Such messages may be sent for example, to problem users.

Pager cartridge **100** can be an integral component of interactive games that rely on hand-held game machines and/or game consoles connected to televisions. For example, a message (e.g., a game move or instruction) can be received by pager cartridge **100** connected to game machine **10**. The move or instruction contained in the message can be utilized by a game program executed by game machine **10** or can be transmitted via a serial or infrared link to another portable game machine and/or to a game console connected to a television. This capability maximizes mobility as well as the economies of game-playing. Thus, players who have a portable game machine configured with a pager cartridge can share information with those players who do not have such a configuration.

The following provides a functional description summary of the above and other functions:

A. Messaging (Alphanumeric, Graphic, Custom, Standard, Sound, Broadcast) Two-way or One-way

1. Broadcasts to all pagers
2. Carbon copy messages (group messages)
3. Download simple games and game levels
4. Digital camera picture transmission (with/without sound)
5. Messages plus sound bites
6. Erase all messages or selective messages
7. Protect messages (selective or all)
8. Oversize message alert (sender)
9. Message time stamping (paging service provider)
10. Last address redial
11. Save messages when pager powered off
12. Send messages to numeric and/or alpha pagers
13. Auto correction of garbled messages
14. Overhead messages
    - meter renewal request
    - meter renewal acknowledgment
    - pager first time activation and confirmation
    - ability to change pager address remotely via paging service
    - issue credits for non-completed messages via paging service
15. Messages to and from Internet, telephones and pagers
16. Introduction of location finder service under E-**911** conditions
17. Global Positioning System mapping

B. Dictionaries, Directories and Libraries

1. Standard words and phrases (e.g., fifty entries)
2. Custom words and phrases (e.g., twenty entries)
3. Standard graphics and symbols (e.g., twenty-five entries)
4. Custom graphics and symbols (e.g., ten entries)
5. Custom address book (e.g., ten entries+portable memory cartridge)
6. Standard audio library with sounds, word/phrases (male and female versions/voices) (e.g., fifteen entries)
7. Built-in instructions and player help information
8. Pager frequently asked questions
9. Multiple musical options for message received alert audio

C. Features

1. On screen keyboard
2. User password (PIN) device access protection
3. Message storage (e.g., 24 hours+, paging service provider)
4. Scheduled message release (paging service provider, if no internal clock)
5. Memory full indicator
6. Scrolling indicator and scrolling of messages
7. Message time-stamping and return address
8. Reminder alerts
9. Portable message/game storage (portable memory cartridge)

10. Accessible and updateable message meter
11. Accessible signal strength meter or indicator
12. Pager general capcode identification (paging company)
13. Pager device specific capcode extension (paging company)
14. Power on switch
15. Silent vibrator mode
16. Audio mode (from musical alter options library)
17. Belt clip
18. Signal kill button
19. Low battery beep (30 minute intervals)
20. Internal real time clock
21. Memory: read only and read/write
22. Game machine compatibility
23. Connectivity to other portable game machines and/or game consoles through hardwire or infrared connection
24. Connectivity to personal computer through hardwire or infrared connection

D. Message cards

1. Manufactured to state lottery security standards
2. Individual serialization
3. Non-sequential encrypted message meter activation codes
4. Dynamic database message card tracking system
5. Unique activation message cards to start meter and register device on system
6. Artful designs to create user collectible message cards
7. Management of an optional monthly subscription program

Further features include:

"Messages" are easily constructed from a dictionary of words

Phrases can be augmented and created by users to reflect their personal communication styles, i.e., users will likely develop their own codes when messaging among friends

Messages are composed by "pointing and clicking" using an on-screen keyboard or electronic dictionaries. Users have the ability to create their own address books to quickly transmit to friends and family

Digital images can be exchanged and optionally supplemented by sound bites from a sound dictionary

A belt hook accessory to easy transport

Pager device may be bundled with introductory message card
- permits immediate use of pager at time of purchase
- activation logs in the pager devices' unique hardware identification (capcode) to the paging system
- pager operates immediately without any paperwork, advance payments or commitments

Design message cards to be collectible (e.g., Pokemon characters)

Message cards are uniquely encrypted and serialized to insure positive inventory control, preventing multi-use and counterfeiting

Exact card status is maintained by validating all cards entered by users into their pagers (may be accomplished by accepting card validation messages into a database before authorizing individual pager message meter increments).

Example Piggy-Backed Cartridges

As described above, physically, pager cartridge **100** is a stand-alone accessory device, powered by its own power source (e.g., batteries), which can receive messages even when it is not attached to game machine **10**. Notification circuitry **134** of pager cartridge **100** notifies the user that a message has been received, thereby prompting the user to attach pager cartridge **100** to game machine **10** via the corresponding connectors in order to view the received messages. When pager cartridge **100** is inserted into the game cartridge slot of game machine **10** for connection thereto, game machine **10** automatically activates a display of messages on the display thereof in accordance with the operating software stored in the memory of the pager. As noted above (see FIGS. **6**C and **6**D), pager cartridge **100** itself includes a built-in cartridge slot to accept game cartridges or other accessories (such as read/write memory cartridges, a digital camera, etc.), thereby enabling game play or digital camera operations while pager cartridge **100** is attached to game machine **10**. The use of blank read/write memory cartridges can be used to augment internal memory for storing large messages (e.g., images) and to accept and store mini-games, game levels, messages, game hints, tips, high scores etc. for later viewing or use. These read/write memory cartridges also permit the sharing of games and game information among game players.

Example GPS Cartridge

As mentioned above, a global positioning system (GPS) cartridge is also selectively insertable into the slot of game machine **10** or into the slot of pager cartridge **100**. GPS is a satellite-based radio navigation system developed and operated by the U.S. Department of Defense (DOD) and permits users to determine their three-dimensional position velocity, and time. GPS utilizes satellites that are arranged in orbits such that at any time a minimum of six satellites will be in view to users anywhere in the world. The satellites continuously broadcast position and time data. The GPS cartridge includes, among other things, an antenna, a receiver, a demodulator, and a control circuit that allows the user to receive the GPS satellite broadcasts and compute his/her precise position, velocity and time based on measurements of the user's distance from the group of satellites in space. More specifically, each GPS satellite transmits an accurate position and time signal. The circuitry of the GPS cartridge measures the time delay for the signal to reach the receiver, which is the direct measure of the apparent range to the satellite. Measurements collected simultaneously from four satellites are processed to solve for the three dimensions of position velocity and time.

FIG. **13** is a block diagram showing the components mounted on a printed circuit board contained within a plastic housing of a GPS cartridge **200**. These components include a receiving antenna **203**, a GPS receiver **205**, a GPS demodulator **207**, a GPS control circuit **209**, a memory **211**, and an interface **213**. The radio waves transmitted from GPS satellites are received by GPS receiver **205** through antenna **203**, and information carried by the radio waves, namely, time and satellite position is demodulated by GPS demodulator **207** and supplied to GPS control circuit **209**. GPS control circuit **209** generates user position information (longitude, latitude and altitude) on the basis of the received information. Memory **211** contains the control program usable by control circuit **209** for calculating the user position information based on the received information. Memory **211** is also usable by control circuit **209** for storing data during the position calculations and during other operations performed by control circuit **209**. Memory **211** will generally

comprise a read only memory portion and a read/write memory portion. Memory **211** may also store one or more video game programs that are executable by CPU **26** of game machine **10**. Game machine **10** may execute video game programs (including those stored in memory **211**) in accordance with position information calculated by GPS control circuit **209**.

Interface **213** provides for communication between the GPS cartridge **200** and portable game machine **10**. Example GPS cartridge **200** includes electrical contacts provided on the edge of the printed circuit board contained within the plastic housing of GPS cartridge **200**. These electrical contacts mate with the corresponding edge connector electrical contacts within game machine **10** when GPS cartridge **200** is inserted into the slot of game machine **10** and with the corresponding edge connector electrical contacts within pager cartridge **100** when GPS cartridge **200** is inserted into the slot of pager cartridge **100**. In this way, GPS cartridge **200** may be electrically connected with game machine **10** and/or pager cartridge **100** whereby, for example, user position information may be communicated to game machine **10** and/or pager cartridge **100**. GPS cartridge **200** may optionally be provided with a display and/or speaker (not shown) for communicating the position information to the user. A power supply **215** such as replaceable batteries supplies power to the components of GPS cartridge **200**.

GPS cartridge **200** may itself be provided with a slot into which other cartridges such as game cartridges, pager cartridges, read/write memory cartridges, etc. are insertable. The slot contains edge connector electrical contacts that are configured to mate with electrical contacts of the game cartridges, pager cartridges, read/write memory cartridges etc. Thus, it will be appreciated that other cartridges may be "piggy-backed" onto GPS cartridge **200**.

Example Digital Camera Cartridge

A digital camera cartridge is also selectively insertable into the slot of game machine **10** or into the slot of another cartridge such as pager cartridge **100**. The digital camera cartridge is usable to capture images, which images may then be transmitted to others via an operation using paging cartridge **100**. By way of example, but not limitation, one digital camera cartridge suitable for use in connection with the present invention is described in application Ser. No. 09/430,169, filed on Oct. 29, 1999, the contents of which are incorporated herein in their entirety. The digital camera cartridge of Application Ser. No. 09/430,169 will be referenced herein as digital camera cartridge **300** and will now described with reference to FIGS. **14**–**17**.

FIGS. **14** and **15** are external perspective views showing the structure of digital camera cartridge **300**. FIG. **16** is an exploded view showing that digital camera cartridge **300** includes a camera portion **330**, a camera supporting portion **331**, and a cartridge body portion **341**. Camera portion **330** is shown as including an image detecting device **333** that is encased by generally spherical case **332** having a front portion **332***f* and a rear portion **332***r*. The front portion **332***f* of spherical case **332** includes a front panel **321** in which an opening **320** is provided for allowing images to be incident on a lens (not shown) of image detecting device **333**. Support portion **331** comprises a camera supporting body **310** and a fixed supporting body **312**. Support portion **331** is configured to rotatably support camera portion **330** such that camera portion **330** is rotatable between a "forward-looking" direction (i.e., the direction of the outward normal from the outer surface of a front portion **341***f* of cartridge body portion **341**) and a "rearward-looking" direction (i.e., the direction of the outward normal from the outer surface of a rear portion **341***r* of cartridge body portion **341**). Support portion **331** further supports camera portion **330** so that the angle between the optical axis and the outward normal from the outer surface of front portion **341***f*A of cartridge body portion **341** when the camera portion is positioned in the forward-looking direction is between about 10 to 45° and is preferably about 15°. In this way, for example, camera portion **330** is conveniently oriented to detect and capture the face of a user watching display **16** of game machine **10**.

As most clearly seen in FIG. **15**, an opening **361** is formed at the lower portion of digital camera cartridge **300**. Digital camera cartridge **300** houses a printed circuit board **342** on which is mounted a nonvolatile semiconductor read-only memory (e.g., ROM, EPROM, etc.) and a read/write memory (e.g., RAM or other temporary memory). A plurality of terminals **343** is arranged on the lower portion of printed circuit board **342** to electrically connect components mounted on the board to connector **40** of game machine **10** or to the connector of another cartridge into which digital camera cartridge **300** is inserted. Terminals **343** are connected to the electrical components mounted on printed circuit board **342** in a suitable circuit pattern.

Digital camera cartridge **300** can be used to capture images of other persons and objects, and these images are displayed on display **16**. By providing a predetermined input to game machine **10** via some combination of one or more of operating keys **48***a*–**48***e*, the image displayed on display **16** may be stored in the read/write memory of digital camera cartridge **300**. If digital camera cartridge **300** is piggy-backed into a pager cartridge **100**, the images stored in the read/write memory of digital camera cartridge **300** may be transmitted to other using the radio circuitry of pager cartridge **100** in response to some other predetermined input to game machine **10** via some other combination of one or more of operating keys **48***a*–**48***e*.

FIG. **17** is a block diagram showing that the electrical structure of digital camera cartridge **300** includes camera portion (image detecting device) **333**, a ROM **345** a format converting processing circuit **356**, and a shot image temporary storage RAM (hereinafter referred to as "image RAM") **357** for storing captured images. ROM **345** includes a game program storage area **345***a* similar to the ROM used in game cartridge **12**, and a shot image write/read control program storage area **345***b*. Game program storage area **345***a* stores one or more video game programs and shot image write/read control program storage area **345***b* stores an image write program that is usable by format converting processing circuit **356** to format convert image data captured by camera portion **330** and then to write the format-converted image data to image RAM **357**. Program storage area **345***b* also stores an image read program usable to read image data stored in image RAM **57**. ROM **345** may also store image compression/decompression routines that utilize any conventional compression/decompression algorithms.

Like the above-described pager cartridge **100** and GPS cartridge **200**, digital camera cartridge **300** may itself be provided with a slot into which other cartridges such as game cartridges, read/write memory cartridges, etc. are insertable. The slot contains edge connector electrical contacts that are configured to mate with electrical contacts of the game cartridges, read/write memory cartridges, etc. Thus, it will be appreciated that other cartridges may be "piggy-backed" onto digital camera cartridge **300**.

Example Read/Write Memory Cartridge

A read/write memory cartridge **400** is also insertable into the slot of game machine **10** or into the slot of another

cartridge such as pager cartridge **100**, GPS cartridge **200**, or digital camera cartridge **300**. FIG. **18** is a block diagram of a read/write memory cartridge **400** that includes a read/write memory **402** and an interface **404** for electrically connecting the read/write memory cartridge to game machine **10** (or other cartridge). Read/write memory **402** is usable for storing various types of data including game score data image data captured by a digital camera cartridge **300**, message data received by a pager cartridge **100**. In the case of image data and message data, one or more read/write memory cartridges may be used to "archive" images or messages by, for example, piggy-backing the read/write memory cartridge onto a digital camera cartridge **300** or a pager cartridge **200** and then transferring images and messages thereto in response to predetermined user inputs to operating keys **48***a*–**48***e* of game machine **10**.

The present invention may also be applied to other wireless technologies such a GSM (Global System for Mobile Communications) and WAP (Wireless Application Protocol). Many of the features of the invention (e.g., intervention, embedded game codes and tactics) are applicable to wired connections (e.g., via modem). Of course, in the case of a portable game machine a wired connection limits mobility—an inherent advantage of a portable game machine. Nonetheless, the benefits derived from intervention, embedded game codes and tactics, etc. in terms of increased enjoyment of game playing can outweigh the mobility limitations.

Although the above description is in terms of a portable game machine, it will be apparent that the principles of the present invention may be adapted to other types of game machines including game consoles such as the N-64 available from Nintendo of America or as described in application Ser. No. 60/643,981, filed Aug. 23, 2000.

In addition, while the pager cartridge, GPS cartridge, and digital camera cartridge are shown as add-on devices to an existing game machine, it is possible to incorporate some or all of the circuitry needed to implement the above-described operations in the game machine itself (portable or otherwise).

Other Example Compatible Implementations

Certain of the above-described system components could be implemented as other than the portable game machine **10** described above. For example, one could run graphics application or other software written for the system on a platform with a different configuration that emulates the system or is otherwise compatible with it. If the other platform can successfully emulate, simulate and/or provide some or all of the hardware and software resources of portable game machine **10**, then the other platform will be able to successfully execute the software.

As one example, an emulator may provide a hardware and/or software configuration (platform) that is different from the hardware and/or software configuration (platform) of the system. The emulator system might include software and/or hardware components that emulate or simulate some or all of hardware and/or software components of the system for which the application software was written. For example, the emulator system could comprise a general-purpose digital computer such as a personal computer, which executes a software emulator program that simulates the hardware and/or firmware of the system. The emulator could also comprise a personal digital assistant (PDA) that simulates the hardware and/or firmware of the system. An emulator may execute the game software so that a particular game functions and/or appears somewhat differently from how it functions and/or appears on its intended platform. Thus, the emulator may show a color game in monochrome or a play a game without its accompanying sound. Emulation as used herein is intended to include emulation that results in these and other such differences in functions and/or appearance.

Some general purpose digital computers (e.g., IBM or MacIntosh personal computers and compatibles) are now equipped with 3D graphics cards that provide 3D graphics pipelines compliant with DirectX or other standard 3D graphics command APIs. They may also be equipped with stereophonic sound cards that provide high quality stereophonic sound based on a standard set of sound commands. Such multimedia-hardware-equipped personal computers running emulator software may have sufficient performance to approximate the graphics and sound performance of the system. Emulator software controls the hardware resources on the personal computer platform to simulate the processing, graphics, sound, peripheral and other capabilities of the portable game machine platform for which the game programmer wrote the game software. Similarly. PDAs running emulator software may have sufficient performance to approximate the graphics and sound performance of the system.

FIG. **19**A illustrates an example overall emulation process using a host platform **1201**, an emulator component **1303**, and a game software executable binary image provided on a storage medium **42**. Host **1201** may be a general or special purpose digital computing device such as, for example, a personal computer, a laptop computer a palm-top computer, a video game console, a portable game machine, a personal digital assistant, an internet appliance, a set-top box, or any other platform with sufficient computing power. Emulator **1303** may be software and/or hardware that runs on host platform **1201**, and provides a real-time conversion of commands, data and other information from storage medium **62** into a form that can be processed by host **1201**. For example, emulator **1303** fetches "source" binary-image program instructions intended for execution by portable game machine **10** from storage medium **42** and converts these program instructions to a target format that can be executed or otherwise processed by host **1201**.

As one example, in the case where the software is written for execution on a platform using an IBM PowerPC or other specific processor and the host **1201** is a personal computer using a different (e.g., Intel) processor, emulator **1203** fetches one or a sequence of binary-image program instructions from storage medium **1305** and converts these program instructions to one or more equivalent Intel binary-image program instructions. The emulator **1203** also fetches and/or generates graphics commands and audio commands intended for processing by the graphics and audio processor **114**, and converts these commands into a format or formats that can be processed by hardware and/or software graphics and audio processing resources available on host **1201**. As one example, emulator **1303** may convert these commands into commands that can be processed by specific graphics and/or or sound hardware of the host **1201** (e.g., using standard DirectX, OpenGL and/or sound APIs).

An emulator **1303** used to provide some or all of the features of the video game system described above may also be provided with a graphic user interface (GUI) that simplifies or automates the selection of various options and screen modes for games run using the emulator. In one example, such an emulator **1303** may further include enhanced functionality as compared with the host platform for which the software was originally intended.

FIG. **19**B illustrates one example emulation host system **1201** suitable for use with emulator **1303**. System **1201**

includes a processing unit **1203** and a system memory **1205**. A system bus **1207** couples various system components including system memory **1205** to processing unit **1203**. System bus **1207** may be any of several types of bus structures including a memory bus or memory controller, a peripheral bus, and a local bus using any of a variety of bus architectures. System memory **1207** includes read only memory (ROM) **1252** and random access memory (RAM) **1254**. A basic input/output system (BIOS) **1256**, containing the basic routines that help to transfer information between elements within personal computer system **1201**, such as during start-up, is stored in the ROM **1252**. System **1201** further includes various drives and associated computer-readable media. A hard disk drive **1209** reads from and writes to a (typically fixed) magnetic hard disk **1211**. An additional (possible optional) magnetic disk drive **1213** reads from and writes to a removable "floppy" or other magnetic disk **1215**. An optical disk drive **1217** reads from and, in some configurations, writes to a removable optical disk **1219** such as a CD ROM or other optical media. Hard disk drive **1209** and optical disk drive **1217** are connected to system bus **1207** by a hard disk drive interface **1221** and an optical drive interface **1225**, respectively. The drives and their associated computer-readable media provide nonvolatile storage of computer-readable instructions, data structures, program modules, game programs and other data for personal computer system **1201**. In other configurations, other types of computer-readable media that can store data that is accessible by a computer (e.g., magnetic cassettes, flash memory cards, digital video disks, Bernoulli cartridges, random access memories (RAMs), read only memories (ROMs) and the like) may also be used.

A number of program modules including emulator **1303** may be stored on the hard disk **1211** removable magnetic disk **1215**, optical disk **1219** and/or the ROM **1252** and/or the RAM **1254** of system memory **1205**. Such program modules may include an operating system providing graphics and sound APIs, one or more application programs, other program modules, program data and game data. A user may enter commands and information into personal computer system **1201** through input devices such as a keyboard **1227**, pointing device **1229**, microphones, joysticks, game controllers, satellite dishes, scanners, or the like. These and other input devices can be connected to processing unit **1203** through a serial port interface **1231** that is coupled to system bus **1207**, but may be connected by other interfaces, such as a parallel port, game port Fire wire bus or a universal serial bus (USB). A monitor **1233** or other type of display device is also connected to system bus **1207** via an interface, such as a video adapter **1235**.

System **1201** may also include a modem **1154** or other network interface means for establishing communications over a network **1152** such as the Internet. Modem **1154**, which may be internal or external, is connected to system bus **123** via serial port interface **1231**. A network interface **1156** may also be provided for allowing system **1201** to communicate with a remote computing device **1150** (e.g., another system **1201**) via a local area network **1158** (or such communication may be via wide area network **1152** or other communications path such as dial-up or other communications means). System **1201** will typically include other peripheral output devices, such as printers and other standard peripheral devices.

In one example, video adapter **1235** may include a 3D graphics pipeline chip set providing fast 3D graphics rendering in response to 3D graphics commands issued based on a standard 3D graphics application programmer interface such as Microsoft's DirectX 7.0 or other version. A set of stereo loudspeakers **1237** is also connected to system bus **1207** via a sound generating interface such as a conventional "sound card" providing hardware and embedded software support for generating high quality stereophonic sound based on sound commands provided by bus **1207**. These hardware capabilities allow system **1201** to provide sufficient graphics and sound speed performance to play software stored in storage medium **1305**.

An emulator **1303** used to provide some or all of the features of the video game system described above may also be provided with a graphic user interface (GUI) that simplifies or automates the selection of various options and screen modes for games run using the emulator. In one example, such an emulator **1303** may further include enhanced functionality as compared with the host platform for which the software was originally intended.

FIG. **19**C illustrates another example emulation host system **1201'** suitable for use with emulator **1303**. The emulation host system in FIG. **19**C is generally configured along the lines of a personal digital assistant such as those available from Palm Inc., Handpsring. Inc. and Sony and running an operating system such as Windows CE, EPOC or PalmOS. Typically, such personal digital assistants provide capabilities for a diary/scheduler, to-do lists, phone/address books and the like. System **1201'** includes a processing unit **1503** and memory **1505**. A system bus **1507** couples various system components including memory **1505** to processing unit **1503**. Memory **1505** includes read only memory (ROM) **1252** and random access memory (RAM) **1254**. A basic input/output system (BIOS), containing the basic routines that help to transfer information between elements within system **1201'**, such as during start-up, is stored in the ROM **1252**. Memory **1505** may also include external memory in the form of memory cards or memory sticks inserted into a suitable port provided in the housing for the components of system **1201'**. A touch-sensitive display screen (e.g., a touch-sensitive liquid crystal display screen) **1509** is also connected to system bus **1507** via an interface **1511**. Inputs via touch-sensitive screen **1509** are typically made using a stylus. Other input devices **1513** such as pushbuttons switches, pointing devices and the like are also connected to system bus **1507** via an interface **1515**. The input devices may also include external keyboards or game control devices (e.g., joystick, game controller). The input devices may be used as game controls (e.g., starting the game, character movement, character action, etc.) when system **1201'** is used with emulator **1303**. Games may be written to memory **1505** using communication circuit **1521** which may take the form of a modem for downloading the game from the Internet for example, or of a cradle (e.g., a USB cradle) for connecting system **1201'** to a personal computer.

One or more speakers **1517** are connected to system bus **1507** via an audio interface **1519** to output sounds. A communication circuit **1521** is connected to system bus **1507** via a communications interface **1523** to permit communication with other devices. By way of illustration, communication circuit **1521** may, for example, be a modem and communications interface **1523** may be a serial port. Generally speaking, communication circuit **1521** may be configured for wired or wireless communication in accordance with any conventional communication protocol. A power supply **1525** provides power for the components of system **1201'**.

Any patent documents mentioned above are hereby incorporated by reference into the present application.

Although the present invention has been described and illustrated in detail, this description is for illustrative purposes only and is not to be construed as limiting the present invention.

What is claimed is:

1. For use with a game machine having a processing system to execute a video game program and player controls operable by a user to generate video game control signals; a pager cartridge comprising:

video game program memory for storing a video game program executable by said processing system;

radio circuitry configured to receive messages transmitted via a paging system; and

a connector that, in use, electrically connects said pager cartridge to said game machine, wherein

said radio circuitry is further configured to transmit messages via said paging system.

2. The pager cartridge according to claim 1, further comprising: message credit memory for storing message credits.

3. The pager cartridge according to claim 2, wherein said radio circuitry transmits messages via said paging system only if the number of message credits stored in said message credit memory is greater than a number of message credits needed to transmit the messages.

4. The pager cartridge according to claim 1, wherein said game machine is a portable game machine.

5. The pager cartridge according to claim 1, wherein said processing system is configured to execute a video game program in accordance with at least one instruction contained in a message received by said radio circuitry.

6. For use with a game machine having a processing system to execute a video game program and player controls operable by a user to generate video game control signals; a pager cartridge comprising:

radio circuitry configured to receive messages containing video game program instructions transmitted via a paging system; and

a connector that, in use, electrically connects said pager cartridge to said game machine, wherein

said radio circuitry is further configured to transmit messages via said paging system, and

wherein said pager cartridge is adapted to receive a replaceable video game program cartridge when said pager cartridge is connected to said game machine.

7. For use with a game machine having a processing system to execute a video game program and player controls operable by a user to generate video game control signals; a pager cartridge comprising:

radio circuitry configured to receive messages containing video game program instructions transmitted via a paging system; and

a connector that, in use, electrically connects said pager cartridge to said game machine, wherein

said radio circuitry is further configured to transmit messages via said paging system, and

wherein said pager cartridge is adapted to receive a global positioning system cartridge when said pager cartridge is connected to said game machine.

8. For use with a game machine having a processing system to execute a video game program and player controls operable by a user to generate video game control signals; a pager cartridge comprising:

radio circuitry configured to receive messages containing video game program instructions transmitted via a paging system; and

a connector that, in use, electrically connects said pager cartridge to said game machine, wherein

said radio circuitry is further configured to transmit messages via said paging system, and

wherein said pager cartridge is adapted to receive a digital camera cartridge when said pager cartridge is connected to said game machine.

9. For use with a game machine having a processing system to execute a video game program and player controls operable by a user to generate video game control signals; a pager cartridge comprising:

radio circuitry configured to receive messages containing video game program instructions transmitted via a paging system; and

a connector that, in use, electrically connects said pager cartridge to said game machine, wherein

said radio circuitry is further configured to transmit messages via said paging system, and

wherein said pager cartridge is adapted to receive a read/write memory cartridge when said pager cartridge is connected to said game machine.

10. A game machine comprising:

pager circuitry comprising two-way radio circuitry configured to transmit and receive messages via a paging system;

a user interface enabling a user to provide inputs to said game machine;

a display; and

a processing system operable in response to user inputs to cause messages received by the radio circuitry of said pager circuitry to be displayed on said display, wherein

said pager circuitry is incorporated in a pager cartridge removably attachable to said game machine, said pager cartridge further comprising a memory for storing a video game program and said processing system being operable in response to user inputs to execute the video game program stored in the memory of said pager cartridge.

11. The game machine according to claim 10, wherein said game machine is a portable game machine.

12. The game machine according to claim 10, wherein said processing system is further operable to execute a video game program in accordance with at least one instruction contained in a message received by said radio circuitry.

13. The game machine according to claim 10, further comprising:

a speaker,

wherein said processing system is operable to communicate messages received by said radio circuitry to the user via said speaker.

14. The game machine according to claim 10, wherein said processing system is operable to cause said display to display a prompt during execution of a video game program indicating that a message has been received by said radio circuitry.

15. A game machine comprising:

pager circuitry comprising two-way radio circuitry configured to transmit and receive messages via a paging system;

a user interface enabling a user to provide inputs to said game machine; and

a processing system operable in response to user inputs to execute a game program in accordance with at least one instruction contained in a message received by said pager circuitry, wherein

said pager circuitry is incorporated in a pager cartridge that is removably attachable to said game machine, said pager cartridge further comprising a memory for storing a video game program and said processing

system being operable in response to user inputs to execute the video game program stored in the memory of said pager cartridge.

16. The game machine according to claim **15**, wherein said game machine is a portable game machine.

17. The game machine according to claim **15**, further comprising:

a display,

wherein said processing system is operable to communicate messages received by said radio circuitry to the user via said display.

18. The game machine according to claim **17**, further comprising:

a speaker,

wherein said processing system is operable to communicate messages received by said radio circuitry to the user via said speaker.

19. The game machine according to claim **17**, further comprising:

a display,

wherein said processing system is operable to cause said display to display during execution of a video game program a prompt indicating that a message has been received by said radio circuitry.

20. The game machine according to claim **19**, wherein said processing system is operable in response to user inputs requesting display of the received message to suspend execution of the video program and display the received message.

21. The game machine according to claim **20**, wherein said processing system is operable in response to user inputs to resume execution of the suspended video game program.

22. A game machine comprising:

radio circuitry configured to transmit messages via a paging system;

digital camera circuitry configured to capture an image;

a user interface enabling a user to provide inputs to said game machine;

a processing system operable in response to user inputs to cause the image captured by said digital camera to be transmitted as part of a message via said paging system.

23. The game machine according to claim **22**, wherein said digital camera circuitry is provided as part of a digital camera cartridge that is removably attachable to said game machine.

24. The game machine according to claim **23**, wherein said digital camera cartridge further comprises a memory for storing a video game program that is executable by said processing system.

25. The game machine according to claim **22**, wherein said radio circuitry is provided as part of a pager cartridge that is removably attachable to said game machine.

26. The game machine according to claim **25**, wherein said pager cartridge further comprises a memory for storing a video game program that is executable by said processing system.

27. The game machine according to claim **22**, wherein said radio circuitry is provided as part of a pager cartridge that is removably attachable to said game machine and said digital camera circuitry is provided as part of a digital camera cartridge that is removably attachable to said game machine and said pager cartridge.

28. The game machine according to claim **27**, wherein either one or both of said pager cartridge and said digital camera cartridge further comprises a memory for storing a video game program that is executable by said processing system.

29. The game machine according to claim **22**, wherein said game machine is a portable game machine.

30. The game machine according to claim **22**, wherein said processing system executes a video game program in accordance with at least one instruction contained in a message received by said radio circuitry.

31. A game machine comprising:

a pager cartridge removably attachable to said game machine and comprising two-way radio circuitry configured to transmit and receive messages via a paging system;

a game cartridge removably attachable to said pager cartridge while said pager cartridge is attached to said game machine, said game cartridge comprising a memory for storing a video game program;

a user interface enabling a user to provide inputs to said game machine; and

a processing system operable in response to user inputs to execute the video game program stored in the memory of said game cartridge while said pager cartridge is attached to said game machine and while said game cartridge is attached to said pager cartridge.

32. The game machine according to claim **31**, wherein said processing system executes the video game program in accordance with at least one instruction contained in a message received by said pager cartridge.

33. The game machine according to claim **31**, wherein said game machine comprises a portable game machine.

34. The game machine according to claim **31**, wherein said pager cartridge further comprises a memory for storing another video game program that is executable by said processing system.

35. A cartridge for use in a system for playing video games by displaying game information based at least in part on user interaction provided through operation of at least one user-manipulable control, the system including a main unit comprising a processor and a cartridge insertion port that receives the cartridge, the cartridge comprising:

a housing dimensioned to be at least partially inserted into the cartridge insertion port;

an electrical connector that electrically connects the cartridge to the main unit;

two-way paging circuitry for communication via a wireless paging system; and

a memory including a first memory portion for storing instructions for performing paging operations using the two-way paging circuitry and a second memory portion for storing instructions for a video game.

36. The cartridge according to claim **35**, wherein the instructions for performing paging operations include instructions for composing and reviewing messages.

37. The cartridge according to claim **35**, wherein the instructions for performing paging operations include instructions for determining a number of message credits and determining whether to send a message based on the determined number of message credits.

38. The cartridge according to claim **35**, wherein the instructions for performing paging operations include instructions for transmitting background messages while a game is played using said main unit.

39. The cartridge according to claim **38**, wherein the instructions for performing paging operations include instructions for enabling/disabling background message transmission.

40. A game system for playing a video game, comprising:

a cartridge comprising radio circuitry for transmitting and receiving messages over a paging system and a storage

medium for storing game-related activation data contained in received messages; and

a game machine including a connector for connecting to the cartridge and a processing system for executing a video game program, the video game program including game features that are activated by the activation data.

41. The game system according to claim **40**, wherein the game machine is embodied in a hand-held unit and the radio circuitry and storage medium are embodied in a cartridge that is at least partially insertable in a slot formed in the band-held unit.

42. The game system according to claim **40**, wherein the game-related activation data comprises game character activation data for activating video game characters.

43. The game system according to claim **40**, wherein the game-related activation data comprises collectible activation data for activating video game collectibles.

44. The game system according to claim **40**, wherein the game-related activation data comprises game level activation data for activating additional video game levels.

* * * * *