UNITED STATES PATENT AND TRADEMARK OFFICE

BEFORE THE PATENT TRIAL AND APPEAL BOARD

SAMSUNG ELECTRONICS CO. LTD. and SAMSUNG ELECTRONICS AMERICA, INC.,
Petitioners,

v.

MOBILE DATA TECHNOLOGIES LLC,
Patent Owner

IPR2025-00536

U.S. Patent 9,032,039

DECLARATION OF HENRY HOUH, PH.D. IN SUPPORT OF PETITION FOR *INTER PARTES* REVIEW OF U.S. PATENT 9,032,039

Mail Stop PATENT BOARD
Patent Trial and Appeal Board
U.S. Patent & Trademark Office
P.O. Box 1450
Alexandria, VA 22313-1450

TABLE OF CONTENTS

Page

I. QUALIFICATIONS 3

II. UNDERSTANDING OF RELEVANT LEGAL PRINCIPLES 6

III. '039 PATENT 8

- A. Overview of the '039 Patent 9
- B. Level of Ordinary Skill in the Art 13
- C. Prosecution History 14
- D. Claim Construction 16
  - 1. "Mobile Device" 17
  - 2. "Wireless Networking Functionalit[y]/[ies] of the Mobile Device" 18
  - 3. "Wireless Network" 18
  - 4. "Application-Based Information Channel" 19

IV. GROUND 1: COMBINATION OF RANDALL AND FORSYTH RENDERS CLAIMS 1-4, 8- 9, 13-15, 17-19, 22-25, AND 28-30 OBVIOUS 20

- A. Overview of the Combination 20
  - 1. Randall 22
    - a) Client Devices: Wireless Information Devices 25
    - b) Servers 26
    - c) Communication means 27
    - d) Database 34
  - 2. Forsyth 38
  - 3. Motivation to Combine Randall and Forsyth 40
- B. Independent Claims 43
  - 1. Client-Side Independent Claims 1 and 18 44
    - a) Preambles [1P]/[18P] and Structural Limitations [18A]-[18B] 45

b) Processing Limitations [1A]-[1E]/[18C]-[18G] 65

2. Server-Side Independent Claims 19 and 23 113

a) Preamble [19P]: "method" 115

b) Preamble [23P]: "server" 115

c) Server Architecture Limitations [23A]-[23B] 116

d) Processing Limitations [19A]-[19D]/[23C]-[23F] 123

3. Claim 17: Client-Side "Computer-Readable Storage Medium" 128

4. Claim 22: Server "Computer-Readable Storage Medium" ...131

C. Claims 2 and 29 – "personalized content application" 133

D. Claim 3—Collaborative Workspace 135

E. Claim 4—"Chat Channel" 137

F. Claims 8-9—"Wireless Networking Functionality" Claims.....139

G. Claim 13—Captured Content 140

H. Claims 14 and 15—Mobile Device Claims 142

I. Claims 24 and 25—"Integrated Content" Claims 145

J. Claim 28—Channel "Accessible Via a Mobile Website" 147

K. Claim 30—Other Content 152

V. GROUND 2: COMBINATION OF PELKEY AND ECK RENDERS ..... CLAIMS 1-4, 8-9, 13-15, 17-19, 22-25 AND 28-30 OBVIOUS. 154

A. Overview of the Combination 154

1. Pelkey 155

2. Eck 157

3. Motivation to Combine Pelkey and Eck 159

B. Independent Claims 162

1. Client-Side Independent Claims 1 and 18 162

a) Preamble [1P]: "method" 163

b) Preamble [18P]: "mobile device" 163

TABLE OF CONTENTS
(continued)

Page iii

c) Mobile Device Architecture Limitations [18A]-[18B] 166

d) Processing Limitations [1A]-[1E]/[18C]-[18G] 169

2. Server-Side Independent Claims 19 and 23 189

a) Preamble [19P]: "method" 191

b) Preamble [23P]: "server" 191

c) Server Architecture Limitations [23A]-[23B] 192

d) Processing Limitations [19A]-[19D]/[23C]-[23F] 194

3. Claims 17: Client-Side "Computer-Readable Storage Medium" 197

4. Claim 22: Server "Computer-Readable Storage Medium" 198

C. Claims 2 and 29: "personalized content application" 199

D. Claim 3: Collaborative Workspace 200

E. Claim 4: "Chat Channel" 201

F. Claims 8-9: "Wireless Networking Functionality" Claims 202

G. Claim 13: Specific Captured Content 204

H. Claims 14 and 15: Specific Mobile Devices 205

I. Claims 24 and 25: "Integrated Content" Claims 206

J. Claim 28—Channel "Accessible Via a Mobile Website" 208

K. Claim 30—Other Content 209

VI. CONCLUSION 209

I, Henry Houh, Ph.D., declare as follows:

1. I have been retained by Goodwin Procter LLP on behalf of Petitioners Samsung Electronics Co. Ltd. and Samsung Electronics America, Inc. ("Petitioners") to provide this Declaration concerning technical subject matter relevant to the petition for *Inter Partes* Review ("Petition") of U.S. Patent 9,032,039 ("the '039 patent").

2. I am over 18 years of age. I have personal knowledge of the facts stated in this Declaration and could testify competently to them if asked to do so.

3. I have been asked to provide my technical opinions regarding how a person of ordinary skill in the art would have understood the claims of the '039 patent at the time of the alleged invention, which I have been asked to assume is the 2002 timeframe. For purposes of whether the teachings of the prior art render the claims of the '039 patent obvious, I have been asked to assume the date of June 18, 2002. I have also been asked to provide my technical opinions on how concepts in the '039 patent specification relate to claim limitations of the '039 patent.

4. In reaching the opinions provided herein, I have considered the '039 patent, its prosecution history, and the references cited in my Declaration and the Appendix. I have also drawn on my own education, training, research, knowledge, and personal and professional experience.

5. In general, I have been asked to cite to the specification of a patent or patent publication using the following formats: (Patent, Col:Line Number(s)) or (Patent, Paragraph Number(s)). For example, the citation ('039 patent, 1:1-10) points to the '039 patent specification at column 1, lines 1-10. Also, for convenience, I have been asked to use italics to denote limitations from the challenged claims. Unless otherwise noted, all emphasis is added.

6. I am being compensated for my time at my standard consulting rate. I am also being reimbursed for expenses that I incur during the course of this work. My compensation is not contingent upon the results of my study and analysis, the substance of my opinions, or the outcome of any proceeding involving the '039 patent. I have no financial interest in the outcome of this matter or in any litigation involving the '039 patent.

7. I understand that another party, Meta Platforms, Inc. ("Meta"), has challenged the '039 patent in *inter partes* review proceedings at *Meta Platforms, Inc. v. Mobile Data Techs. LLC*, IPR2024-00248 ("Meta-MDT-IPR"), which was instituted by the Patent Trial and Appeal Board. I refer in my declaration below to some of the positions and issues raised in that proceeding, including as it pertains to claim construction of certain claim terms in the '039 patent.

I. Qualifications

8. I believe I am well qualified to render useful opinions on this matter. I will briefly summarize my knowledge, training, and experience here. A more detailed summary of my background, education, experience, and publications is set forth in my curriculum vitae (CV), which is provided as EX-1004.

9. I received my Bachelor of Science degree in Physics from Massachusetts Institute of Technology ("MIT") in 1990. I also received my Bachelor of Science degree, Master of Science degree, and Ph.D., all in Electrical Engineering and Computer Science, from MIT in 1989, 1991, and 1998 respectively.

10. My college studies focused on communications and data networking. My undergraduate and graduate coursework pertained to telecommunication networks optical communications, and data networking. I maintained both the computer workstations and networking devices in my networking research group, along with other graduate students within the group.

11. I served as a teaching assistant for the Computation Structures course several times. This course taught low-level computer architecture and included a laboratory component that involved building a central processing unit ("CPU") from discrete components from the gate level and higher. As a student this course, I redesigned the CPU hardware and software to raise the average speed by a factor of 30. I then became a head laboratory assistant and teaching assistant as an

undergraduate student, and later became head teaching assistant as a graduate student.

12. I was a research assistant in the Telemedia Network Systems ("TNS") group in the Laboratory for Computer Science as part of my doctoral research at MIT. This group built a high-speed gigabit network and created applications that ran over the network such as remote video and audio capture, processing, and display on computer terminals.

13. I set up the TNS group's web server. Using this server, the TNS group was the first group to initiate a remote video display over the World Wide Web. Vice President Al Gore visited our group in 1996 and received a demonstration of—and remotely drove—a radio-controlled toy car with a wireless video camera mounted on it; the video was encoded by TNS-designed hardware, streamed over the TNS-designed network and displayed using TNS-designed software. I was also able to modify a web server to determine the location of the client, and present different web pages based on the client's location. I co-authored and presented papers on these video demonstrations and dynamic webpages at the first World Wide Web conference.

14. I defended and submitted my Ph.D. thesis, titled "Designing Networks for Tomorrow's Traffic," in January 1998. As part of my thesis research, I analyzed local-area and wide-area flows to show a more efficient method for routing packets

in a network, based on traffic patterns at the time. My thesis also addressed real-time streamed audio and video. The network traffic that I analyzed was IP protocol traffic, including User Datagram Protocol ("UDP") and Transmission Control Protocol ("TCP").

15. I worked at NBX Corporation as a Senior Scientist and Engineer from 1997 to 1999, and worked on the first fully featured business telephone that operated on data networks. I designed the core audio reconstruction algorithms for the telephones which depacketized the voice data and reconstructed the audio, and the voice data packet transmission algorithms. I created a system to capture and analyze network packets sent by devices in the NBX system for aid in testing and debugging. I also designed and validated the core packet transport protocol used by the phone system. In addition, I designed and oversaw the development of the underlying transport protocol used by the NBX100 phone system for reliable packet transport. This transport protocol is still estimated to be used hundreds of millions of times daily. I also served as lead architect in designing NBX's next-generation system, and worked with NBX's successor 3Com to demonstrate the phone system over cable equipment infrastructure in 1999.

16. From 1999 to 2004, I worked at Teradyne and its successor Empirix, which developed and provided functional and load test tools for telecommunication protocols and systems. I rebuilt Empirix's primary testing product, which could pull

data from a database to provide variation of data submitted to the web applications, and then to extract data from a web page to populate a database with key results computed by the web site after customized data is submitted. This product, PacketSphere, was Empirix's most successful new platform introduction and received several industry awards.

17. I also worked at BBN Technologies Corp. from 2004 to 2008. BBN Technologies is a technology R&D company with expertise in acoustics, speech recognition, and communications technology. I helped create EveryZing, formerly PodZinger, which is a public audio and video search engine that utilizes speech recognition technology.

18. I am a named inventor on several U.S. patents. The patents and applications are listed in my CV.

II. Understanding of Relevant Legal Principles

19. I am not a lawyer, and I will not provide any legal opinions. Although I am not a lawyer, I have been advised certain legal standards are to be applied by technical experts in forming opinions regarding the meaning and validity of patent claims.

20. I understand that a patent claim is invalid if it is anticipated or obvious in view of the prior art, and that a claim can be unpatentable even if all of the requirements of the claim cannot be found in a single prior-art reference. I further

understand that invalidity of a claim requires that the claim be anticipated or obvious from the perspective of a person of ordinary skill in the art at the time the invention was made.

21. I have been informed that a patent claim is invalid if it would have been obvious to a person of ordinary skill in the art. In analyzing the obviousness of a claim, I understand the following factors may be taken into account: (1) the scope and content of the prior art; (2) the differences between the prior art and the claims; (3) the level of ordinary skill in the art; and (4) any so called "secondary considerations" of non-obviousness, if they are present. I am not aware of any evidence of secondary considerations of non-obviousness relevant to the '039 patent. I reserve the right to supplement this Declaration if Patent Owner ("PO") introduces evidence of secondary considerations of non-obviousness.

22. I understand that to prove that prior art or a combination of prior art renders a patent obvious, it is necessary to:

> (1) identify the particular references that, singly or in combination, make the patent obvious;
> (2) specifically identify which elements of the patent claim appear in each of the asserted references; and
> (3) explain why a person of ordinary skill in the art would have combined the references, and how they would have done so, to create the inventions claimed in the patent. I further understand that exemplary rationales that may support a conclusion of obviousness include:

- combining prior art elements according to known methods to yield predictable results;
- simple substitution of one known element for another to obtain predictable results;
- use of known technique(s) to improve similar devices (methods or products) in the same way;
- applying a known technique to a known device (method or product) ready for improvement to yield predictable results;
- "obvious to try" – choosing from a finite number of identified, predictable solutions with a reasonable expectation of success; known work in one field of endeavor may prompt variations of the work for use in either the same field or a different field based on design incentives or other market forces if the variations are predictable to a person of ordinary skill in the art; and
- some teaching, suggestion, or motivation in the prior art that would have led a person of ordinary skill in the art to modify the prior art reference or to combine prior art reference teachings to arrive at the claimed invention.

23. I have been informed that, in considering obviousness, hindsight reasoning derived from the patent-at-issue may not be used.

III. '039 Patent

24. The '039 patent, filed September 11, 2014, claims priority through five continuations to U.S. Patent 7,599,983, filed June 18, 2003, which claims priority to Provisional 60/389,430 filed June 18, 2002. While I do not have an opinion about

whether the patent is entitled to any of the priority dates, each applied reference was filed or published before June 18, 2002.

25. The ’039 patent “relates generally to network-based communications systems, and more particularly to techniques for information content management in such systems.” (EX-1001, 1:28-30.) The patent describes providing content from a mobile device, along with “information associated with at least one wireless networking functionality of the mobile device … to at least one server for insertion into a specified application-based information channel.” (EX-1001, 2:16-22.)

A. Overview of the ’039 Patent

26. The ’039 patent identifies “accessing of information content over wireless networks via web-enabled mobile devices” as among “the most rapidly expanding aspects of wireless networking.” (EX-1001, 1:34-36.) Figure 1A, reproduced below, “shows an example network-based communication system 10” including “wireless network 12 coupled to the Internet 14, a set of mobile devices 15, a set of servers 16 and a set of user terminals 18.” (EX-1001, 3:42-46.)

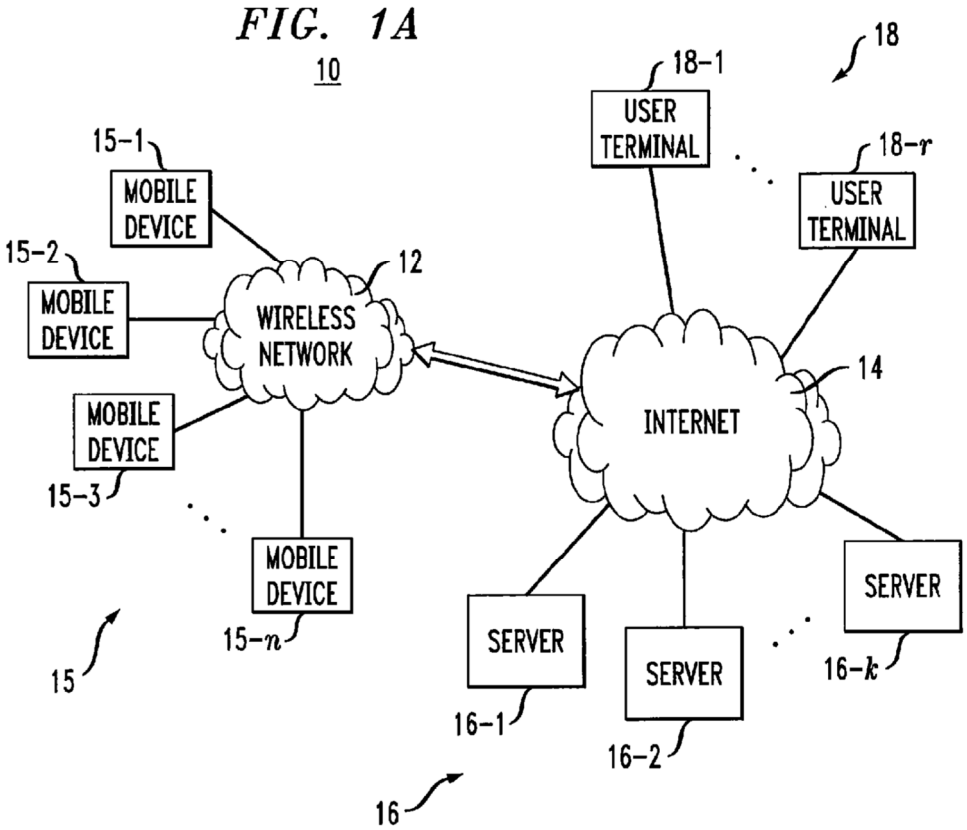

’039 patent, Figure 1A

27. The Background purports to address the challenge of “facilitating the process of creating, publishing, distributing or otherwise managing information content so as to provide optimal presentation consistent with the limited display space and navigational capabilities of typical mobile devices.” (EX-1001, 1:44-48.) This section also identifies “mobile telephones, personal digital assistants (PDAs), [and] palmtop computers” as typical mobile devices. (EX-1001, 1:37-38.) Further, the ’039 patent admits in this section that it is “well-known” these wireless devices “provide access to the Internet” and “support other types of wireless networking

functionality, such as messaging, distributed collaboration, and location-based services." (EX-1001, 1:38-43.)

28. The patent discloses that the system "provides at least one content management site accessible to a system user" including "M-channels" which "allow unsophisticated users to easily and efficiently author message data or other types of information content to be made accessible via a collaborative workspace, a data mailbox, a collaborative community, or other type of mobile site." (EX-1001, 5:6-7, 8:5-10.) Such mobile sites may be associated with "a group comprising multiple members having a common interest," (EX-1001, 6:18-20), "an event," (EX-1001, 6:38-43), "a game," (EX-1001, 7:18-19), or "a user of IM, SMS, MMS, email or other type of messaging service," (EX-1001, 7:30-32), among other associations. (EX-1001, 6:18-7:67.)

29. The main menu page in this example includes information identifying user account information and the particular mobile sites associated with that user, page navigational links, mobile site information associated with a selected one of the mobile sites associated with the user, M-channel information, and a delete site field. (EX-1001, 13:35-41.)

FIG. 8

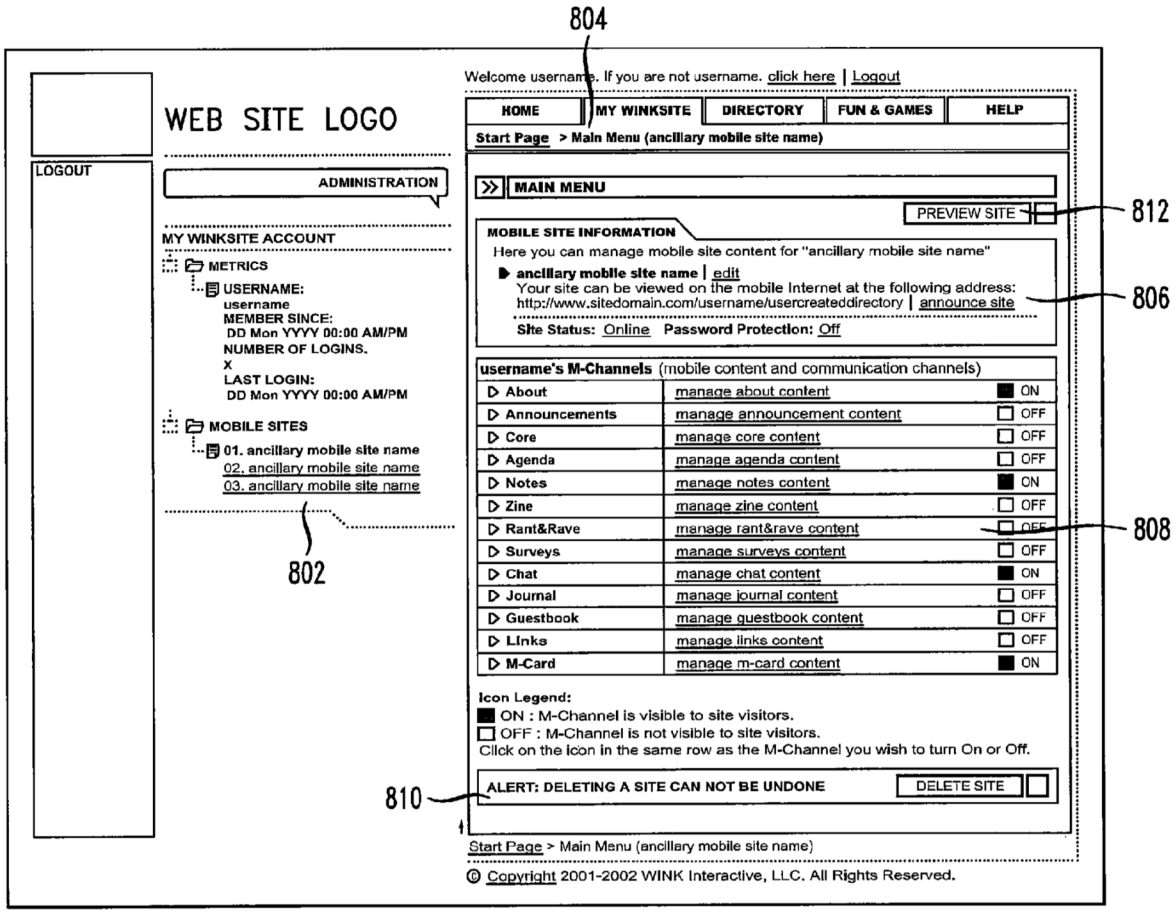

'039 patent, Figure 8

30. According to the '039 patent, these "M-channels allow unsophisticated users to easily and efficiently author message data or other types of information content to be made accessible via a collaborative workspace, a data mailbox, a collaborative community, or other type of mobile site or portion thereof generated or otherwise managed in the system 10." (EX-1001, 8:5-11).

31. The '039 patent provides examples of M-channels:

> Examples of M-channels suitable for use in the illustrative embodiment include channels denoted herein as mobile

> ID/business card (also referred to as a "contact" M-channel), announcements, chat, events, guest book, diary/journal, bookmarks/links, discussion forum, survey/poll, newsletter/zine, notes, email, address book, contribute/ donate, mobile volunteer management, company directory, in/out board, field reports, feedback, form builder, live data/in-out syndication, mobile document library, products catalog/shopping cart, services catalog/shopping cart, appointments, task list/assignments, promotions, offers, coupons, sweepstakes, contests, photo blog, etc.

(EX-1001, 8:21-32.)

B. Level of Ordinary Skill in the Art

32. I understand that certain issues relating to the validity of the '039 patent must be judged from the perspective of a person of ordinary skill in the relevant art, as I discuss below. I have been asked to define the level of a "person of ordinary skill in the art" or "POSITA" at the time the alleged invention as claimed was made. In deciding the level of ordinary skill, I have considered the following factors, which I have been informed are relevant to the determination:

- levels of education and experience of persons working in the field;
- types of problems encountered in the art;
- prior art solutions to these problems;
- rapidity with which innovations are made; and
- sophistication of the technology.

33. In my opinion, a POSITA would have a bachelor's degree in electrical engineering, computer science, or similar field, with two years of experience in

developing and implementing network-based computer systems that interact with mobile devices, such as systems for storing and retrieving information over the Internet or communicating using the Web using wireless mobile devices. A person could also have qualified as a POSITA with some combination of (1) more formal education (such as a master's of science degree) and less technical experience, or (2) less formal education and more technical or professional experience.[1]

C. Prosecution History

34. During prosecution, the Examiner rejected the filed claims as obvious over the prior art combination of U.S. Publication 2002/0060246 to Gobburu in view of U.S. Patent 6,594,347 to Calder. (EX-1002, 160-66.) In response, Applicants argued that Calder failed to disclose "*providing the content and determined information to at least one server for insertion into a specified application-based information channel.*" (EX-1002, 233-34.) Applicants also amended the independent claims 1, 18, 19, and 23 to overcome the rejection. Claim 1 was amended to add the following limitations, where the added limitations are underlined, and deleted limitations are struck through.

1. (Currently amended) A method comprising:

~~obtaining~~ <u>capturing</u> content at a mobile device;

[1] I understand that PO did not dispute this characterization of a POSITA in the Meta-MDT-IPR.

identifying a previously established application-based information channel into which the captured content is to be inserted, the identified application-based information channel permitting interaction between a user of the mobile device and one or more additional users;

determining information associated with at least one wireless networking functionality of the mobile device ~~responsive to user input~~; ~~and~~

providing the captured content ~~and determined information~~ from the mobile device to at least one server for insertion in association with the determined information into ~~a specified~~ the identified application-based information channel; and

receiving other content, at the mobile device via the identified application-based information channel, from at least one of the additional users.

(EX-1002, 227.) Corresponding amendments were made to claims 18, 19, and 23.

35. Following these amendments and remarks, the Examiner issued a Notice of Allowance, stating the prior art of record "does not teach or suggest in detail" the following limitations: "identifying a previously established application-based information channel into which the captured content is to be inserted, the identified application-based information channel permitting interaction between a user of the mobile device and one or more additional users; determining information associated with at least one wireless networking functionality of the mobile device; [and] providing the captured content from the mobile device to at least one server

for insertion in association with the determined information into the identified application-based information channel …" (EX-1002, 305.)

D. Claim Construction

36. I understand that "claim construction" is the process of determining a patent claim's meaning. I understand that the Patent Office applies the same claim construction standard used in district courts which seeks to give claim terms their plain and ordinary meaning to a POSITA at the time of the claimed invention in view of the claims, specification, and prosecution history. I also understand that if the patent applicant gave a term a special meaning in the specification or during prosecution, then the special meaning should be used.

37. I understand that in the Meta-MDT-IPR and the co-pending district court litigation, *Mobile Data Techs. LLC v. Meta Platforms, Inc.,* No. 3:24-CV-00896-WHA (N.D. Cal.) (transferred from No. 7:22-cv-00244-ADA-DTG (E.D. Tex.)) ("MDT-Meta-Litigation"), Meta and PO have taken the following claim construction positions reproduced below. (*See* EX-1009, 2-3; EX-1010, 8-17; EX-1011, 2-8.)

38. For purposes of my analysis here, I do not believe express claim constructions are necessary for the terms of the challenged claims, because the prior art renders the claims obvious under the proposed constructions identified above or any other reasonable construction. My analysis discusses the proposed constructions

and explains why, under each of them, the limitations are disclosed and rendered obvious by the prior art.

1. "Mobile Device"

39. I dispute PO's narrow Meta-MDT-IPR construction because it is contrary to the express definition in the specification. (*See, e.g.,* EX-1001, 4:26-29 ("The term 'mobile device' as used herein is intended to include, without limitation, any type of portable information processing device capable of being configured for communication over a network.").) I apply the plain meaning for the term which is consistent with Meta's Meta-MDT-IPR and MDT-Meta-Litigation constructions.

MDT-Meta-Litigation	
PO	plain and ordinary meaning; alternatively, "a piece of handheld equipment" (EX-1009, 3)
Meta	"any type of portable information processing device capable of being configured for communication over a network, including but not limited to a mobile telephone, a personal digital assistant (PDA), a palmtop computer, a hand-held computer, a laptop computer, a tablet computer, a global positioning system (GPS) receiver or other GPS-based navigational device, an MP3 player or other type of audio player, a pager, a watch or other timepiece, a camera, or a portable game player" (EX-1009, 3)

Meta-MDT-IPR	
PO	"a portable device with limited display space and limited navigational capabilities that connects to a mobile site and/or mobile channel via a wireless network" (EX-1010, 9)
Meta	construed based on express definition: "The term 'mobile device' as used herein is intended to include, without limitation, any type of portable information processing device capable of being configured for communication over a network" (EX-1011, 2)

2. "Wireless Networking Functionalit[y]/[ies] of the Mobile Device"

40. In the Meta-MDT-IPR, the parties dispute the construction primarily on the inclusion of language: the "wireless network [is] independent of the Internet." While I also dispute PO's construction, the prior art presented in this Declaration discloses the term under both constructions.

Meta-MDT-IPR	
PO	"functionality implementable by the mobile device via the wireless network independent of the Internet" (EX-1010, 16)
Meta	to the extent the phrase requires express construction, "functionality implementable over a wireless network" (EX-1011, 5)

3. "Wireless Network"

41. The parties in Meta-MDT-IPR addressed the construction of the term "wireless network" which appears in claims 8 and 9 and is referenced in PO's construction of "wireless networking functionality."

Meta-MDT-IPR	
PO	"a network separate from the internet that facilitates connection to the internet by mobile device" (EX-1010, 15)
Meta	to the extent the phrase requires express construction, "a network that allows a device to communicate wirelessly over a network" (EX-1011, 7)

4. "Application-Based Information Channel"

42. The term "*application-based information channel*" is not used in the '039 patent's detailed description. The only mention of "*application-based information channel*", outside the claims, appears in the Summary of the Invention, which I understand was added in the application for the '039 patent and therefore does not appear in the June 2002 provisional or the June 2003 patent application to which the '039 patent claims priority.

43. I note that the term "channel" has different meanings based on the context in which it is used. For example, in the context of an Internet Relay Chat (IRC), a channel is "a named, topical-focused forum where you can chat in real time with other computers." (EX-1028, 4.) For media pushed to a user device, the term "channel" is "a named link to a network-based transmitter to which a user can tune." (EX-1028, 4.) The agreed upon construction uses the term in a manner consistent these exemplary meanings.

44. I understand that Meta and PO agreed to the construction "a computer program-based medium for transferring information" for the purpose of the Meta-MDT-IPR.

MDT-Meta-Litigation	
PO	plain and ordinary meaning; alternatively, "a computer program-based medium for transferring information" (EX-1009, 2)
Meta	"a virtual location at the content management site at which user-authored content may be added for transmission to the mobile web site" (EX-1009, 2)
Meta-MDT-IPR	
PO	"a computer program-based medium for transferring information" (EX-1010, 17)
Meta	"a computer program-based medium for transferring information" (*See* EX-1010, 17)

IV. GROUND 1: Combination of Randall and Forsyth Renders Claims 1-4, 8- 9, 13-15, 17-19, 22-25, and 28-30 Obvious

A. Overview of the Combination

45. The combination of WO 02/17652 to Randall, et al. ("Randall"; EX-1005) and U.S. Patent 7,047,030 to Forsyth, et al. ("Forsyth"; EX-1006) discloses every limitation of claims 1-4, 8-9, 13-15, 17-19, 22-25, and 28-30. Randall and Forsyth were both assigned to Symbian Limited ("Symbian") and describe different aspects of functionality provided by Symbian.

46. Symbian was a company jointly owned by Nokia, Ericsson, Motorola, Matsushita (Panasonic) and Psion. (Allin, 1.) "The nucleus of the company was formed from Psion Software" and the "Symbian [operating system ("OS")] is an evolution of Psion's EPOC Release 5." (Allin, 1.) Symbian provided technical documents describing use of its OS devices in a wireless client-server infrastructure that supported a wide variety of application/services. Such a client-server infrastructure is described in Randall which along with Forsyth describes use of this infrastructure to provide the Forums service.

47. Randall is directed to an "open, universal data infrastructure for wireless information devices" used within a wireless client-server infrastructure. (*See* Randall, 3:10-11.) Randall's data infrastructure is designed for use "by application developers to write new applications by extending the attributes of the database" which forms the core of the data infrastructure, "using a *standard protocol*, as opposed to a closed and proprietary protocol." (Randall, 3:10-13 (emphasis by italics in original).) One application discussed in Randall using its data infrastructure is Forums. (Randall, 40:15-41:14.)

48. Forsyth is directed to a "group communication method" using a "group object" to specify identities of group members. (*See, e.g.,* Forsyth, 1:15-16, 2:17-27.) Forsyth's "group object" is application independent and as such can be created in one application and then immediately used in other applications to specify a group

for group communication. (Forsyth, 24:32.) Forsyth describes use of its "group objects" by Forums. (*See, e.g.*, Forsyth, 2:41-60.) Forsyth provides a detailed discussion of Forums enhanced through the use of group objects and presents numerous use scenarios of this enhanced version of Forums. (*See, e.g.*, Forsyth, 5:35-7:13 (Group Based Text Messaging (Scenario 1)), 7:18-57 (Discussion of Photos (Scenario 2)), 7:58-9:4 (Social Scheduling (Scenario 3)), 9:5-35 (Digital Memento from a User's Birthday (Scenario 4)).)

49. I describe both Randall and Forsyth in further detail below.

1. Randall

50. Randall published on February 28, 2002. (Randall, Bibliography Page (43).)

51. Randall describes that a "large number of entirely new applications are [] being developed to take advantage of the powerful conflux of personal communications, wireless information transfer and computing made possible by the Symbian platform." (Randall, 1:26-28.) Many applications "are client-server based (with the wireless information device itself constituting an advanced client), transferring information to and from servers, which are often internet or WAP servers." (Randall, 1:28-30.) Randall explains that "a major barrier to the fast and efficient design and deployment of applications needing access to shared content is the need to custom build the data sharing infrastructure for each new application."

(Randall, 2:25-27.) Randall therefore presents "an open, universal data infrastructure for wireless information devices which can be used by application developers to write new applications by extending the attributes of the database using a *standard protocol*, as opposed to a closed and proprietary protocol." (Randall, 3:10-13 (emphasis by italics in original).) Accordingly, "a huge range of new applications requiring access to shared content" can "be rapidly and cheaply constructed and rolled out since the data infrastructure which allows content to be shared is pre-fabricated." (Randall, 3:17-19.)

52. Randall also discusses various applications and services using a client-server framework with Symbian's data infrastructure. One such service is Forums. (*See, e.g.,* Randall, 36:6-9.) Randall explains that "Forums also known as chat rooms are likely to be very popular on wireless devices, especially in light of the success of SMS." (Randall, 40:16-17.) Forums "allows several people to be part of a 'channel' or room, which is usually themed; for instance supporters of a football team may meet in a channel devoted to that team to discuss the team." (Randall, 40:17-19.) In use, a "user logs on to a forum" and "he or she will have a name associated with them, it may be a nickname instead of their real name." (Randall, 40:28-30.) "Once they are logged on they can exchange and receive messages with those also on the channel." (Randall, 41:1-2.)

53. Randall illustrates an exemplary network infrastructure supporting Forums in Figure 4 below[2]. The Symbian infrastructure, through services like Forums, "acts in effect like a fully personalised web portal, yet with the information links not consolidated in one general area, but instead distributed to the domains in which they are most likely to be relevant to a user." (Randall, 13:22-24.). The Symbian infrastructure, illustrated below, includes "(a) internet servers hosting extensible databases; (b) wireless information devices which can access information on these databases; and (c) applications resident on these devices which present a common set of APIs to plug-ins from commercial service providers." (Randall, 7:16-19.) That is, to offer the Forums service, a Forums application resides on the wireless device and a corresponding program exists on the server. The client and server communicate via a "communication means" (i.e., set of protocols). As shown, Symbian Forums also supports the ability for non-mobile (fixed) computing devices to connect to the Forums servers over what is labeled the "Internet." I provide an overview of wireless information devices, servers, communications means, and the extensible database below.

[2] Unless otherwise noted, all annotations to Figures have been added.

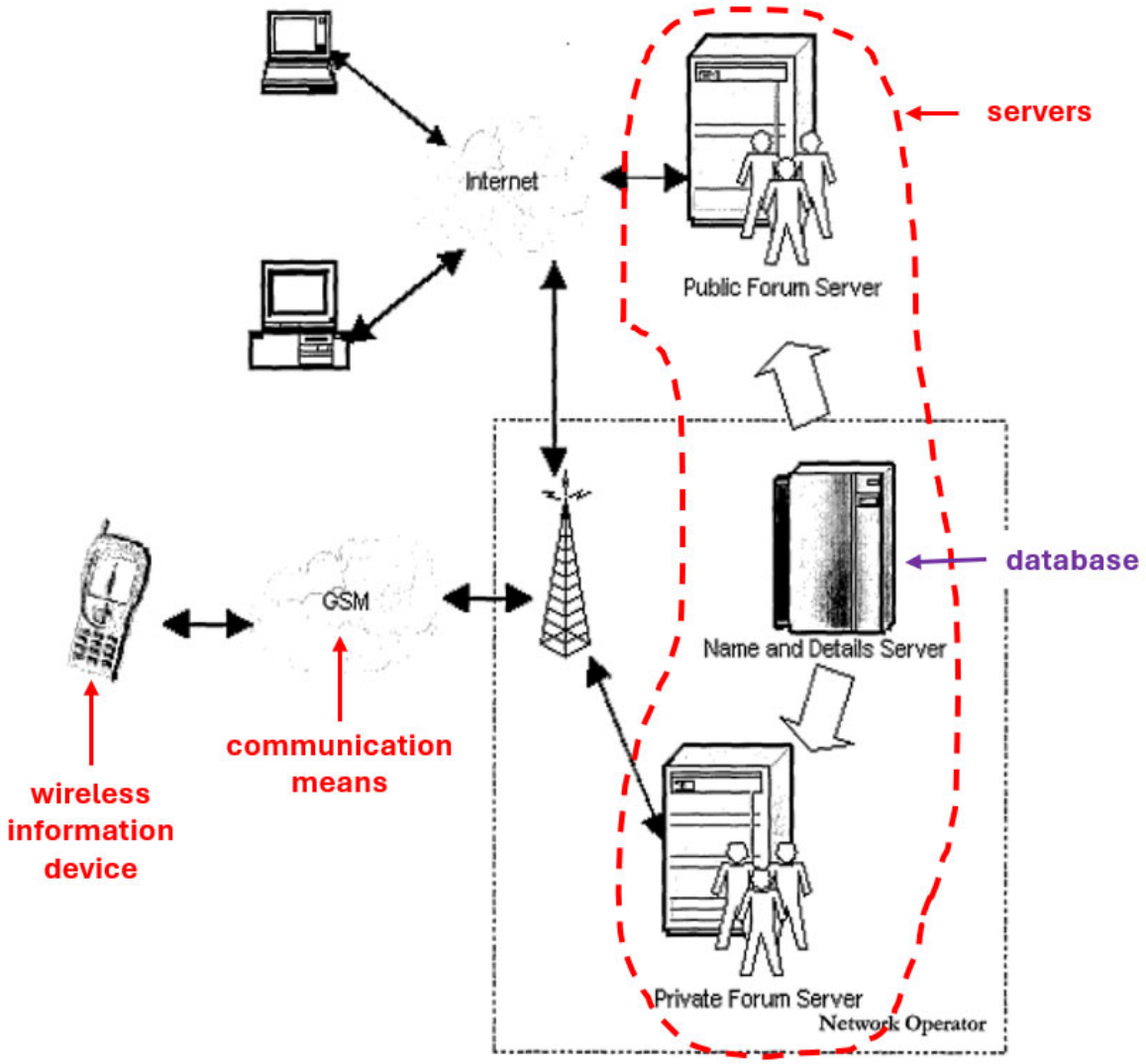

Symbian Forums—Randall, Figure 4

a) Client Devices: Wireless Information Devices

54. Wireless information devices used in Forums "run[] applications which access data by interacting with data component plug-ins supplied by commercial data services providers using a standardised set of APIs to access data." (Randall, 9:6-8.) Randall does not specify the implementation details of the client-side

application. However, based on Randall's disclosure of GSM and WAP, a POSITA would have understood the client-side application is either (1) a standalone application supporting WAP or GSM-messaging protocol (discussed below) or (2) a web browser (such as a WAP microbrowser). Wireless information devices may also "access the information held on the extensible databases running on central servers … without the plug-ins." (Randall, 9:11-13.) The "wireless information device (as well as web browsers) can access an entity's database by sending to the server an unchanging pointer or key (an 'ADS Number') which is unique to that entity." (Randall, 9:13-15.) Randall's "ADS numbers are typically constructed using text strings and can be though[t] of as defining a namespace." (Randall, 9:17-18.) The ADS number "in one implementation [is] an address on a web server – for example www.indirect.com/Alice." (Randall, 64:25-26.)

b) Servers

55. A Symbian Forums server "handle[s] all aspects of **storing and forwarding messages**[3] to the intended recipients." (Forsyth, 3:20-22; 6:9-10 ("message server stores … and forwards a copy of the message to each of the people on the address list").) Randall describes the server-side architecture as the "ServML" Framework. (Randall, 45:1-7.) ServML "embraces existing standards and initiatives" and "uses standard data transports such as WAP or http for data access."

[3] Unless otherwise indicated, all emphasis by bold has been added.

(Randall, 45:14-15.) "Although the [Symbian] server architecture is in many ways identical to the present Internet, the usage model is quite different." (Randall, 46:7-8.) Instead of passive data-viewing, "the Internet and its servers can be used by a mobile device to deliver enchanting services that far surpass the present PC-Internet model." (Randall, 46:8-10.) "The result will be the ability of wireless information devices to interact closely with applications and data on the Internet to deliver high quality services." (Randall, 46:12-13.) That is, in services like Forums, a program component exists on the server to provide the end-to-end service.

c) Communication means

56. Randall uses "existing transports" (communication means) for client-server communication such as "WAP to access the services on the server side" and "standard IP formats such as MIME, SMTP and HTTP" to "enable compatibility with Internet Messaging systems." (Randall, 58:23-27.) In addition to WAP, Randall also discloses use of GSM-SMS for transport over the wireless network. (*See* Randall, 12:11-15 (disclosing that a server could "send a SMS"), 14:10-11 ("This form of data transfer could be via SMS or packet delivery in packet based systems."), 15:16-17 ("Alice's device directly transfers this data to Bob using an appropriate mechanism (such as SMS or IPv6 data packet) without any server intervention."); *see also* Randall, 1:11-13 ("It includes devices able to communicate in any manner over any kind of network, such as GSM …"), Figure 6.)

57. The disclosure of HTTP indicates that the communication means, from non-mobile computers shown in Figure 4, is the world-wide web (WWW) because HTTP operating on top off TCP/IP is the most commonly used protocol on the web and because Randall mentions the "web" at various places. (*See, e.g.,* Randall, 8:25-83 (disclosing "internet servers hosting extensible databases with attributes remotely extensible by application authors" where "[t]he database contains information from or relating to many different entities" and "in effect represents a web page containing information specific to that entity"), 64:25-28 (disclosing one implementation where "[a]n ADS Number is … an address on a web server" (e.g., www.indirect.com/Alice) and "[t]his address is in effect a pointer to entity specific data held on the web server" (e.g., Alice's information)); WAP Architecture, 13.)

58. I discuss the WWW, WAP, and GSM-SMS communications means referenced in Randall below. I note that Randall does not provide details of these means because each was covered in standards documents and would have been well within the general knowledge of a POSITA by June 2002.

(1) WWW

59. The Internet World-Wide Web (WWW) architecture provides "a very flexible and powerful programming model." (WAP Architecture, 12.) Applications and content are "*browsed* by applications known as *web browsers.*" (WAP Architecture, 12 (emphasis by italics in original).) I note that browsers are not the

only programs that can initiate valid web transactions; any program that can create a TCP/IP connection and send a valid protocol request can get data from a web server. All servers and content on the WWW are named using an Internet-standard Uniform Resource Location (URL). (WAP Architecture, 12-13.)

60. As shown in Figure 1 from the WAP Architecture Specification published by the WAP Forum on July 21, 2001, a client device initiates a web transaction by making a request to a URL (e.g., through the web browser). If the requested content exists, it is returned by the web server (HTTP server) and displayed through the browser.

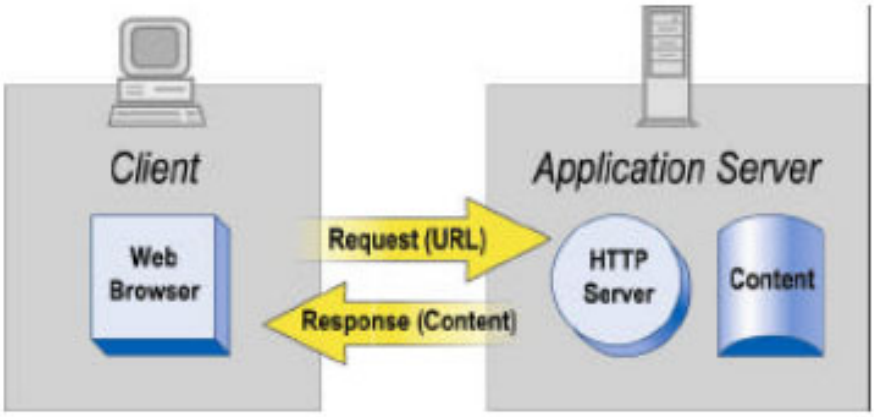

WAP Architecture, Figure 1

(2) WAP

61. "WAP content and applications are specified in a set of well-known content formats based on the familiar WWW content formats." (WAP Architecture, 13.) "Content is transported using a set of standard communication protocols" which are also "based on the WWW communication protocols." (WAP Architecture, 13.)

As shown below in WAP Architecture Figure 3, a WAP microbrowser "in the wireless terminal co-ordinates the user-interface and is analogous to a standard web browser." (WAP Architecture, 13.) However, as I noted above for the WWW, a client application can also be used instead of a microbrowser provided the application uses the WAP protocol stack to communicate with the server. WAP also provides a gateway (labeled as proxy) which "translates requests from a wireless protocol stack (e.g., the WAP 1.x stack—WSP, WTP, WTLS, and WDP) to the WWW protocols (HTTP and TCP/IP)." (WAP Architecture, 14.) The WAP proxy "allows content and applications to be hosted on standard WWW servers." (WAP Architecture, 14.) WAP Architecture specification explains the "nominal use of WAP will include a web server, a WAP proxy and WAP client." (WAP Architecture, 14.)

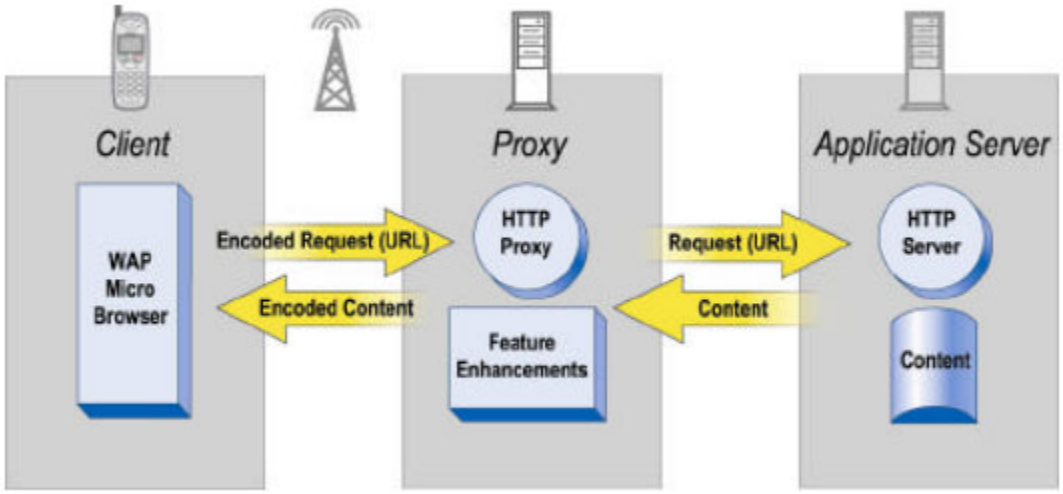

WAP Architecture, Figure 3

62. The WAP Stack, illustrated in WAP Architecture Figure 7 (below) is a layered protocol stack with each layer "provid[ing] a set of functions and/or services to other services and applications through a set of well-defined interfaces." (WAP Architecture, 18.) At the lowest layer are the "Bearer Networks" which include short message (SMS), circuit-switched data, and packet data (e.g., IPv4, IPv6). (*See* WAP Architecture, 18.) The transport service layer provides datagram transport via the Wireless Datagram Protocol (WDP). (WAP Architecture, 19.)

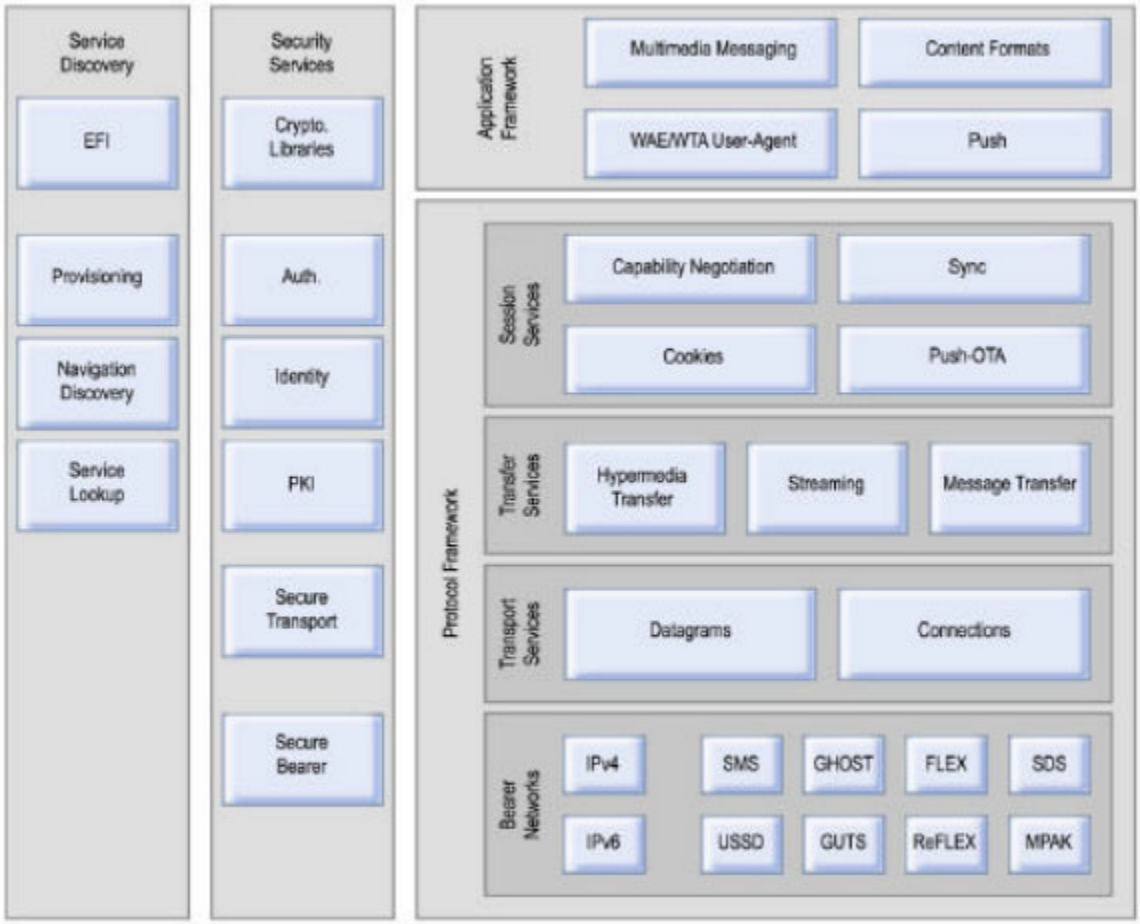

WAP Architecture, Figure 7

63. The transfer services provide streaming and message transfer via Wireless Session Protocol (WSP), Wireless Transport Protocol (WTP), and e.g., MMS Encapsulation protocol. (*See, e.g.,* WAP Architecture, 19.) Session services provide "for the establishment of shared state between network elements." (WAP Architecture, 19.) The application framework "provides a general-purpose application environment based on a combination of World Wide Web (WWW), Internet and Mobile Telephony technologies" with a primary objective "to establish an interoperable environment that will allow operators and service providers to build applications and services that can reach a wide variety of different wireless platforms in an efficient and useful manner." (WAP Architecture, 20.) The application framework includes multimedia messaging support, support for well-defined data formats such as color images, audio, video, animation, etc. and push service for network initiated data transmission to "applications resident on WAP devices." (WAP Architecture, 20.)

64. The following Figure from WAP Architecture is an illustrative configuration of a WAP 1.x gateway depicting the protocol stack at a WAP device, a WAP gateway, and a Web Server. As shown, the WAP gateway has an interface supporting the WAP stack allowing communication over a wireless network and an interface supporting the TCP/IP/HTTP stack allowing communication over the Internet.

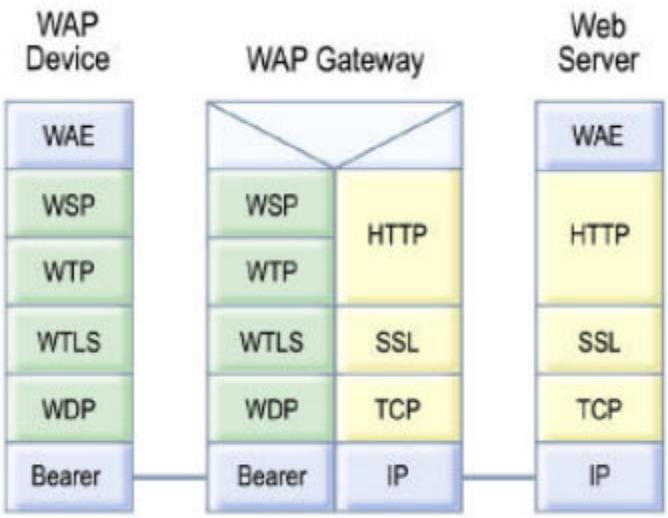

WAP Architecture, Figure 8

65. The Wireless Datagram Protocol specification, issued June 14, 2001 by the WAP Forum ("WDP"; EX-1014) provides the protocol profiles for operating WDP between a mobile device and server over GMS, as specified by Randall. (*See* WDP, 18-20.) I reproduce Figure 4-4 which illustrates the protocol profile for the WDP layer when operating over the GSM-SMS bearer service. The other profiles in WDP specification such as GSM-USSD, GSM Circuit-Switched Data, GSM-GPRS, and GSM Cell Broadcast are equally applicable.

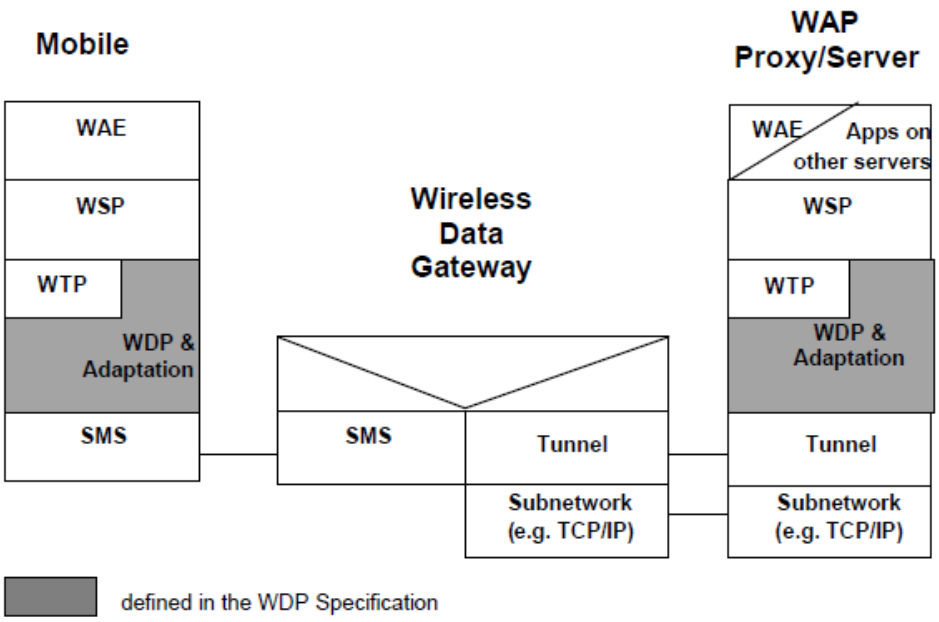

WDP Specification, Figure 4-4

(3) GSM-SMS

66. The "technical realization of short message service (SMS)" for GSM is set forth in ETSI TS 123 040 ("GSM SMS Standard"; EX-1015). I refer to version 3.6.0 of this standard released in September 2001. In GSM-SMS messaging, a mobile station can either send messages (referred to as mobile originating) or receive messages (referred to as mobile terminating). Mobile originated short messages are sent to a server, called the Service Centre, "which acts as a store and forward centre for short messages." (GSM SMS Standard, 6.)

d) Database

67. The internet servers of the Symbian infrastructure "host[] extensible databases with attributes remotely extensible by application authors using *a standard*

protocol over a network." (Randall, 8:25-26 (emphasis by italics in original); *see* Randall, 4:9-12 ("Because the remote server acts as a data repository open to any application which can structure data in conformance with a meta-language schema, it is capable of being used as the central resource which allows data sharing for any new application.").) The "database contains information from or relating to many different entities" and "is organised into information fields which an entity can complete or have completed." (Randall, 8:26-28.) "Information is placed onto the database by an entity so that it can be readily shared with other entities: the database in effect represents a web page containing information specific to that entity." (Randall, 8:29-31.)

68. The system database "is at the heart of much of the [Symbian] System's extensibility." (Randall, 66:3.) "Each piece of data on the server (the 'i-server') has an associated tag (or name) which defines its meaning." (Randall, 66:3-4.) The tags, referred to as "i-tags", "live under a unique category name that is allocated by Symbian to ensure that the global namespace is not polluted." (Randall, 66:4-6.) Each piece of data further has "an associated list of groups ('i-Groups['']) allowed to access the data." (Randall, 66:9-10.) As shown in Randall's Figure 4, the Forums service accesses the database when processing received messages from client devices.

69. Randall's Table 1 (reproduced below) provides examples of "the kinds of information fields which are possible for an individual." (Randall, 8:28-29.) Table 1 "is an example application view" of the i-Data for a user, Alice. (Randall, 66:17.) "Some information is entered by Alice (e.g., her name). Other information is entered automatically (e.g., location information from Bluetooth pods)." (Randall, 66:18-19.) A view of this database is "provided on Alice's mobile device to allow her to manage her data." (Randall, 66:19-20.) Although Randall's example uses a person, Randall teaches that other entity types can have a record stored on the database.

Table 1

Alice's iData			
Field/Attribute	**Category**	**Details**	**i-Groups**
First name	personal	Alice	all
Family name	personal	Edwards	all
Title	work	European Marketing Manager	all
Company Name	work	Wireless Information Device gets R Us	all
Company Address	work	1 Science Park Rd, London, N1	all
Company E-mail	work	alice.edwards@Wireless Information Device getsrus.com	business 1
Company switchboard	work	0207 200 2000	all
Company Direct	work	0207 200 2012	business 1
Mobile Phone	work	0840 1234 567	business 1, friends
Home Phone 1	work	0208 341 1234	friends, family
Home Address	work	25 The Gables, Hampstead, London, NW3	family
My photo	photos		friends
Childhood photo	photos		family
Home note	notice	Sorry about dinner ☹	partner
Work note	notice	In a meeting with Tim till 7pm	work 1
My mood now	mood	Very tired	all
Tel Call Subject		"Dinner Tonight"	
Bluetooth	location	Bluetooth pods 1000-1020 ...Sentinel room 2…	
GPS	location	London W1, Seymour St.	partner
Hobby	preferences	Photography, travel	friends
Book	preferences	Maverick	friends
AlbumOfTheWeek	InstaPoll		friends

Randall, Table 1

2. Forsyth

70. Forsyth issued on May 16, 2006 from U.S. Application 10/476,261, which is a National Stage Entry of PCT/GB02/02046, filed on May 2, 2002.

71. Forsyth enhances the functionality of the Symbian infrastructure through use of group objects which provide "a group communication method for a wireless information device." (*See* Forsyth, 1:15-16.) Specifically, "the end-user of the device defin[es] the identities of the end-user[s] that form group." (Forsyth, 2:4-5.) A group object is then constructed "that defines or references members of the group in a way that enables communication to take place from the device and all other members of the group." (Forsyth, 2:6-9.) This group object is application independent. It can be "used by a first application running on the device to enable communication from the device to be made automatically to all members of the group." (Forsyth, 2:10-12.) Another application running on the device, "unrelated to the first application," can also use the same group object "to enable communication from the device to be made automatically to all members of the group." (Forsyth, 2:13-16.)

72. Through the use of content and application independent group objects "activities performed in different applications but which also involve the same group can re-use the same object." (Forsyth, 5:21-23.) "In this way, a user can organise people and entities (e.g., companies, clients etc.) into different group objects and can

re-use that group object in many different applications (e.g., instant messaging, voice, e-mail, etc)." (Forsyth, 5:23-26.)

73. Forsyth describes the use of its group objects in Symbian Forums which "is designed specifically to allow current and very popular internet type services (e.g. chat/instant messaging between groups) to be handle[d] effectively between mobile devices and to enable a new generation of group based communication services." (Forsyth, 2:40-47.) "Forums offers many advantages to group communication since it is an easy to understand messaging tool that facilitates open discussion amongst a group and allows multiple chat-style conversations to take place simultaneously." (Forsyth, 5:26-30.) Forums described in Forsyth is the Forums application described in Randall, enhanced through the use of group objects.

74. Forsyth describes several Scenarios that illustrate the operation of group-object enhanced Forums: Group Based Text Messaging (Scenario 1), (*see* Forsyth, 5:35-7:13), Discussion of Photos (Scenario 2), (*see* Forsyth, 7:18-57), Social Scheduling (Scenario 3), (*see* Forsyth, 7:58-9:4), and Digital Memento from a User's Birthday (Scenario 4), (*see* Forsyth, 9:5-35). Forsyth also describes numerous services, features, and functions which that can be used within each individual Forum. I discuss these Scenarios and representative services/features/functions in further detail throughout my analysis.

3. Motivation to Combine Randall and Forsyth

75. A POSITA would have been motivated to combine Forsyth's teachings regarding the use of group objects and additional features and functions to enhance the Forums service taught by Randall. The resulting combination, utilizing Randall's Forums network infrastructure, provides a Forums service having a client-based program and a server-based program, which utilizes Randall's extensible database. The Forums service in the combination utilizes Forsyth's group objects as well as the features and functions taught by both Randall and Forsyth to provide an enhanced Forums service.

76. Randall and Forsyth are both in the same field of the '039 patent—"network-based communication systems." (*See* EX-1001, 1:28-30 ("The present invention relates generally to network-based communication systems, and more particularly to techniques for information content management in such systems."); Randall, 40:16-18 (Forums are "also known as chat rooms" and "allow[] several people to be part of a 'channel' or room"); Forsyth, 1:15-16 ("This invention relates to a group communication method for a wireless information device.").) Randall and Forsyth are also reasonably pertinent to problems addressed by the '039 patent, namely "overcom[ing] one or more of the drawbacks of" conventional techniques for content sharing for mobile devices. (*See, e.g,* EX-1001, 1:44-2:7.)

77. A POSITA would have been motivated to make the above combination because Forsyth explicitly motivates the combination. Forsyth stresses the benefits of group objects noting that its "invention is founded on the insight of providing an object which defines solely the identities of members of a group" and "as such, it is application (and hence also content) independent." (Forsyth, 2:24-27.) "This means that a group created in one application (e.g. for text based instant messaging) can immediately be used in other applications (e.g. a diary/agenda application could use that same group as the recipient list for an invitation to a meeting)." (Forsyth, 2:27-32.) "Similarly, data specifically created for one group and in one application can be re-used in a different application and the data viewed appropriately for that different application." (Forsyth, 2:34-37.) Forsyth further describes the "strengths" of Forums application utilizing group objects "over conventional communications." (*See* Forsyth, 2:54-57.) These relative strengths are illustrated in Forsyth's Figure 1 (reproduced below).

Capability:	**Can you create a discussion between group members on your own device?** (Important since it facilitates setting up a group discussion)	**Push delivery?** (Push is more convenient to mobile users)	**Is it possible to retain a long term record of exchanges between group members?** (An important attribute for many new kinds of services)	**Can you deliver messages to all members of a group, or is it restricted to one to one?** (Clearly critical to group based messaging)	**Do all group members see the same, unitary message thread, or are there instead many separate individual messages?** (A single, unitary message entity (e.g. a thread) makes message organisation and navigation far easier.)	**If a recipient is off-line (e.g messaging app not open), are they alerted anyway?** Potentially very important for mobile useage because of the high proportion of time users may not be on-line (i.e. actively using their messaging application).
Web bulletin board	No	No	Yes	Yes	Yes	No
Chat/instant messaging	Yes	Yes	No	Yes	Awkward	No
Group e-mail	Yes	No	Awkward	Yes	No	No
SMS	Awkward	Yes	No	Awkward	No	Yes
Forums	**Yes**	**Yes**	**Yes**	**Yes**	**Yes**	**Yes**

Table 1

Forsyth, Figure 1

78. Therefore, a POSITA would have been motivated to combine Forsyth's teachings with Randall's Forums provided on the Symbian network infrastructure with an extensible infrastructure to obtain the advanced capabilities provided by Forsyth.

79. Additionally, a POSITA when considering Randall's Forums service, would have been motivated to search for other references directed to Forums and its enhancements. As I noted above, Forsyth was originally assigned to Symbian. A POSITA would have been motivated particularly to search for references associated with Symbian for implementation details and enhancements and would have been led to Forsyth.

80. Finally, the combination is nothing more than the application of a known technique (Forsyth's group objects, features and functions) to a known method/product (Randall's Forums service implemented with extensible database infrastructure) which was ready for further improvement.

81. A POSITA would have had a reasonable expectation of success in the combination and the results of the combination would have been predictable because both references are directed to the same service, Forums, are based on devices using the Symbian OS and use features and functionality associated with Symbian. The Symbian operating system was well-known and Symbian offered many technical developer resources prior to the earliest possible priority date of the '039 patent. (*See, e.g.,* EX-1017; Allin, 4-6, 229-31; Jipping, 11-14.)

B. Independent Claims

82. The '039 patent includes three client-side independent claims—a method claim (claim 1), a device claim (claim 18) and a computer program product

("CPP")-style claim (claim 17) and three server-side independent claims—a method claim (claim 19), an apparatus claim (claim 23), and a CPP-style claim (claim 22).

1. Client-Side Independent Claims 1 and 18

83. Client-side claims 1 and 18 include substantially overlapping processing limitations ([1A]-[1E]/[18C]-[18G]), as shown in the table below. Because of the overlap, I address these limitations together. In this table, I also provide a citation to the section discussing each limitation.

Claim 1	Claim 18	Section
[1P] A method comprising:		IV.B.1.a.(1)
	[18P] A mobile device comprising:	IV.B.1.a.(2)
	[18A] at least one processing element comprising a processor coupled to a memory; and	IV.B.1.a.(3)
	[18B] at least one network interface;	IV.B.1.a.(3)
	said at least one processing element being configured to:	IV.B.1.b
[1A] capturing content at a mobile device;	[18C] capture content at the mobile device;	IV.B.1.b.(1)
[1B] identifying a previously established application-based information channel into which the captured content is to be inserted, the identified application-based information channel permitting	[18D] identify a previously established application-based information channel into which the captured content is to be inserted, the identified application-based information channel permitting	IV.B.1.b.(2)

Claim 1	Claim 18	Section
interaction between a user of the mobile device and one or more additional users;	interaction between a user of the mobile device and one or more additional users;	
[1C] determining information associated with at least one wireless networking functionality of the mobile device;	[18E] determine information associated with at least one wireless networking functionality of the mobile device;	IV.B.1.b.(3)
[1D] providing the captured content from the mobile device to at least one server for insertion in association with the determined information into the identified application-based information channel; and	[18F] provide, via said at least one network interface, the captured content from the mobile device to at least one server for insertion in association with the determined information into the identified application-based information channel; and	IV.B.1.b.(4)
[1E] receiving other content, at the mobile device via the identified application-based information channel, from at least one of the additional users.	[18G] receive other content, via the identified application-based information channel, from at least one of the additional users.	IV.B.1.b.(5)

a) Preambles [1P]/[18P] and Structural Limitations [18A]-[18B]

(1) Preamble [1P]: "method"

[1P] A method comprising:

84. The combination of Randall and Forsyth discloses a "*method*" for performing the actions recited in limitation [1A]-[1E] as discussed in §§IV.B.1.b(1)-(5).

(2) Preamble [18P]: "mobile device"

[18P] A mobile device comprising:

85. The combination of Randall and Forsyth discloses a "*mobile device*." I note that claim 1 also recites "*a mobile device*" as part of the "*capturing content*" limitation [1A], which I discuss below. As I discussed in §III.D.1, the term "*mobile device*" was proposed for construction in the MDT-Meta-Litigation and Meta-MDT-IPR. The combination of Randall and Forsyth discloses a "*mobile device*" under Meta and PO's constructions.

MDT-Meta-Litigation	
PO	plain and ordinary meaning; alternatively, "a piece of handheld equipment"
Meta	"any type of portable information processing device capable of being configured for communication over a network, including but not limited to a mobile telephone, a personal digital assistant (PDA), a palmtop computer, a hand-held computer, a laptop computer, a tablet computer, a global positioning system (GPS) receiver or other GPS-based navigational device, an MP3 player or other type of audio player, a pager, a watch or other timepiece, a camera, or a portable game player"

Meta-MDT-IPR	
PO	"a portable device with limited display space and limited navigational capabilities that connects to a mobile site and/or mobile channel via a wireless network"
Meta	construed based on express definition: "The term 'mobile device' as used herein is intended to include, without limitation, any type of portable information processing device capable of being configured for communication over a network"

86. The Randall-Forsyth combination discloses a client-server network infrastructure, illustrated in Randall's Figure 4 (reproduced below), that includes wireless information devices and servers used to implement network-based services, including Symbian Forums. (*See, e.g.,* Randall, 40:28-30.) Specifically, Randall "relates to the use of an open, universal data infrastructure for **wireless information devices** which can be used by application developers to write new applications." (Randall, 3:10-13.) Forsyth "relates to a group communication method for a **wireless information device**." (Forsyth, 1:15-16.)

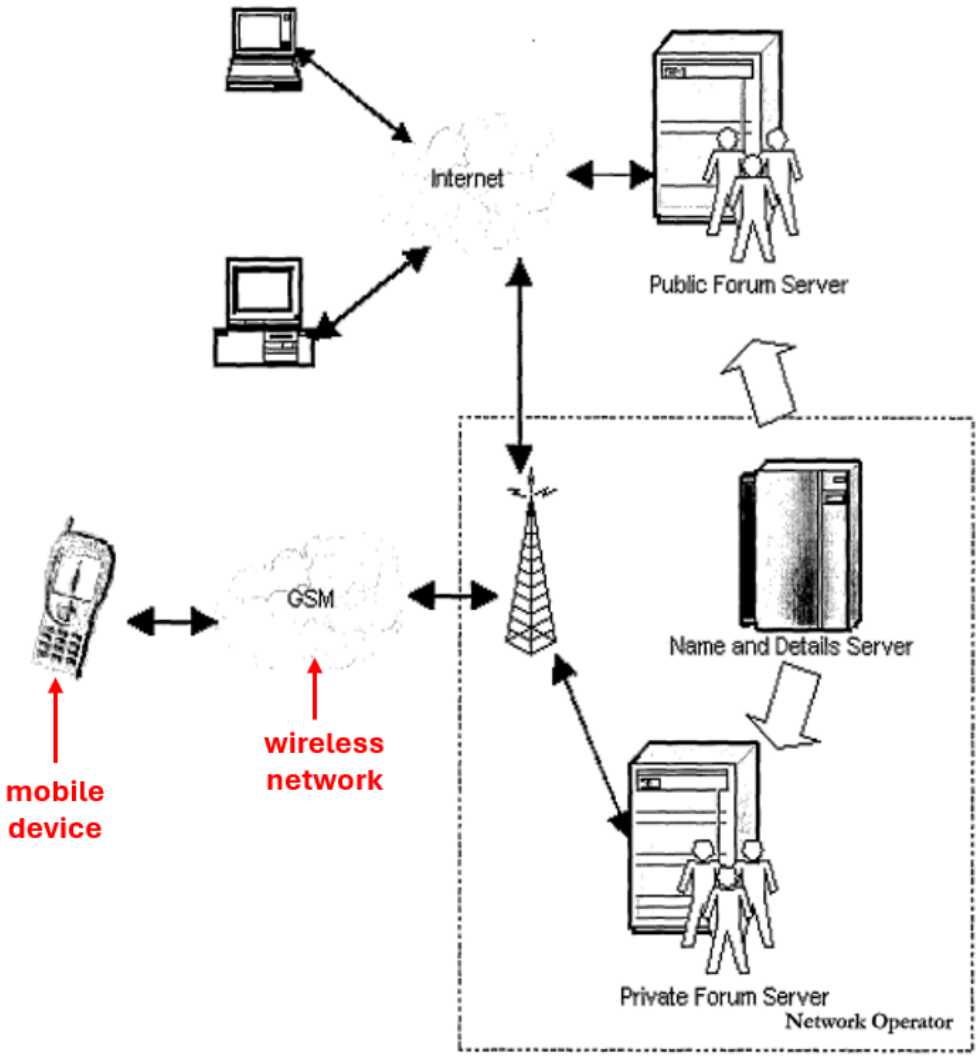

Symbian Forums—Randall, Figure 4

87. Randall and Forsyth both disclose that a wireless information device encompasses "any kind of device with one or two way wireless information capabilities [including] without limitation radio telephones, smart phones, communicators, personal computers, computers and application specific devices." (Randall, 1:7-11; Forsyth, 1:16-22 (same).) Each of these listed devices is portable and has a form factor allowing the device to be held in the hand (i.e., handheld).

Indeed, Forsyth refers to the devices as "mobile devices." (*See, e.g.,* Forsyth, 2:40-47 ("[a]n implementation of the present invention, called Forums™ … is designed specifically to allow current and very popular internet type services (e.g. chat/instant messaging between groups) to be handle[d] effectively between **mobile devices** and to enable a new generation of group based communication services.").)

88. Each of the wireless information devices enumerated by both Randall and Forsyth are also configured for "communicat[ion] in any manner over any kind of network, such as GSM or UMTS, CDMA and WCDMA mobile radio, Bluetooth, [802.11,] IrDa [(infrared)] etc." (Randall, 1:11-13; Forsyth, 1:22-25 (same).) Each listed networks is a wireless network. Thus, the listed devices are configured to connect to and communicate via a wireless network.

89. The "wireless information devices" described by both Randall and Forsyth are each a "piece of handheld equipment" and therefore a "*mobile device*" under PO's MDT-Meta-Litigation construction. These portable devices process information and are capable of being configured for communication over a network. Thus, the "wireless information devices" described by both Randall and Forsyth are each a "*mobile device*" under Meta's MDT-Meta-Litigation and Meta-MDT-IPR constructions ("any type of portable information processing device capable of being configured for communication over a network").

90. Exemplary mobile devices described by Randall and Forsyth (e.g., radio telephones, smartphones, and communicators) have limited display space and/or limited navigational capabilities. For example, as shown in Forsyth's Figure 2 (below-left), the device has limited display space. (*See* Forsyth, 4:61-62; Randall, 45:23-25 ("Unfortunately, the current architecture of the Internet is not well suited for the wireless device form factor, providing an inappropriate user experience (the browser/page metaphor) for mobile devices with small displays.").) And as shown in Forsyth's Figure 6 (below-right), the user can navigate to only the listed forums—i.e., the mobile device has limited navigational capabilities. Thus, the "wireless information devices" described by both Randall and Forsyth are each a "*mobile device*" under PO's Meta-MDT-IPR construction ("a portable device with limited display space and limited navigational capabilities that connects to a mobile site and/or mobile channel via a wireless network").

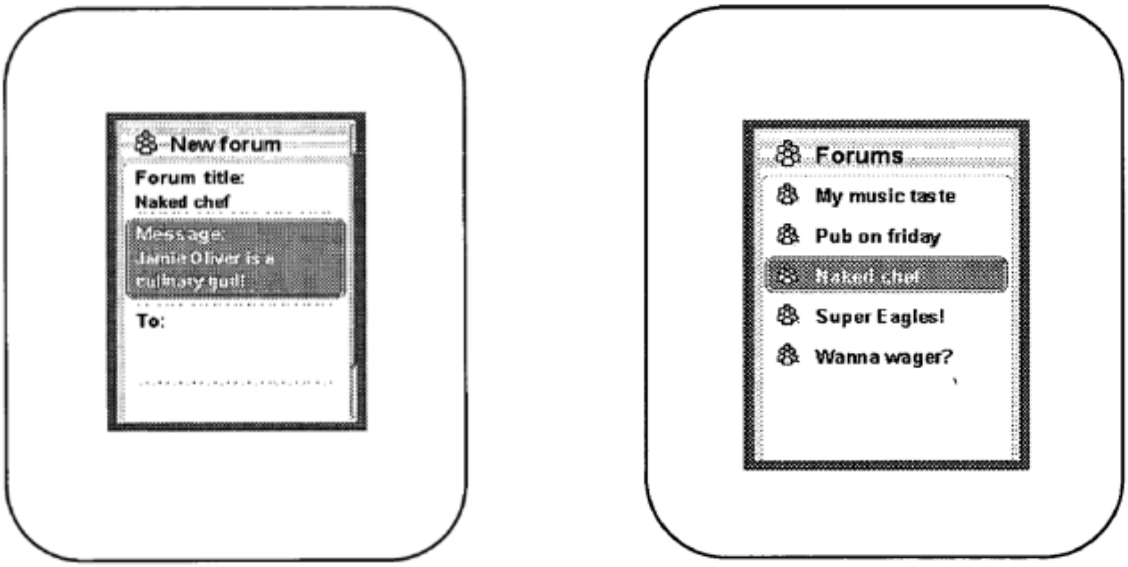

Symbian Forums—Forsyth, Figure 2 (left), Figure 6 (right)

91. Thus, the combination of Randall and Forsyth discloses a "*mobile device.*"

92. Numerous books and papers published prior to June 2002 (or in 2002) confirm the disclosures of Randall and Forsyth regarding wireless devices running the Symbian OS. In addition, the Symbian website available prior to June 2002 included a technology section providing papers, links to books, and other information discussion Symbian devices and client-server infrastructure supporting services/applications. (*See, e.g.,* EX-1018) A POSITA would have been aware of the existing Symbian wireless information devices as well as the reference designs for Symbian devices made publicly available by Symbian. In this section, I primarily cite to "Wireless Java for Symbian Devices" by Allin ("Allin"; EX-1012) published in September 2001 by Symbian Press and "Symbian OS Communications

Programming" by Jipping ("Jipping"; EX-1016) published in June 2002 by Symbian Press for additional supporting evidence. Although other documents pre-dating the '039 patent are equally applicable.

93. The Symbian OS, available prior to 2002, was intended for a range of devices. (Allin, 229; Jipping, 11.) Symbian developed three reference designs for its licensees divided into (1) "[s]martphones, primarily for voice communication, with PDA-like sophistication that allow[] information to be rapidly accessed and reviewed" and (2) "[c]ommunicators with a PDA's form-factor and fully-integrated communications including voice." (Allin, 4.) Communicators included two Symbian reference designs, code-named Crystal and Quartz. (Allin, 4.)

94. Allin's Figure 3 (reproduced below) illustrates the Nokia 9210 Communicator based on the Crystal communicator reference design. (*See* Allin, 5.) The Nokia Communicator uses a 32-bit ARM9-based RISC CPU processor and has 2MB RAM plus 16MB RAM (MultiMediaCard). (Allin, 458-59.)

Allin, Figure 3

95. The Ericsson Communicator concept, illustrated in Allin's Figure 4 (reproduced below) is based on Symbian's Quartz communicator reference design. "Quartz is a pen-based tablet device with integrated telephony." (Allin, 4.)

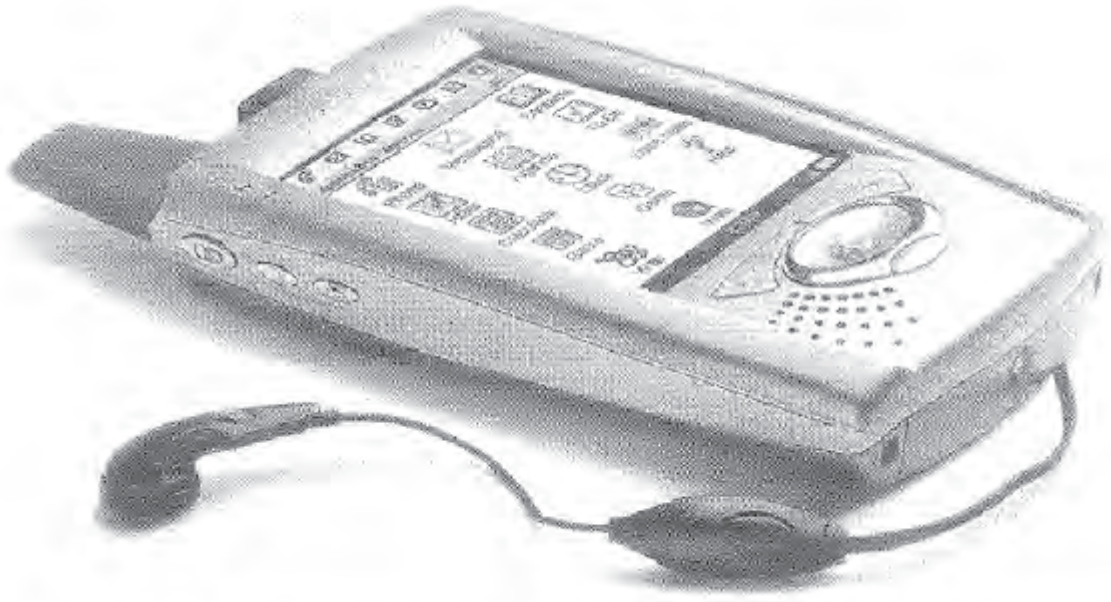

Allin, Figure 4

96. Symbian's smartphone reference design is illustrated in Allin's Figure 5 (reproduced below). The smartphone design "puts browsing content, messaging, and access to entertainment in the forefront and other information management as a secondary goal." (Jipping, 12.) The Nokia 7650, an example product following this design, included an integrated digital camera and was optimized for picture taking and sending, multimedia messaging, SMS, and email. (*See, e.g.,* EX-1019.)

Allin, Figure 5

97. Table 7.1 of Allin summarizes "the principal characteristics of Symbian devices" including screen size, memory, processor, and type of input (e.g., keyboard and/or pen). (Allin, 229.)

Table 7.1 Principal characteristics of Symbian EPOC Release 5 devices

	Revo Plus	5MX	MC218	netBook	netPad
Manufacturer	Psion	Psion	Ericsson	Psion	Psion
Format	Shirt pocket	Pocket, brief case	Pocket, brief case	Small laptop	Tablet
Screen	480 × 160, mono	640 × 240, mono	640 × 240, mono	640 × 480, color	640 × 240, color
Memory	16 MB	16 MB	16 MB	48 MB	–
Processor	36 MHz ARM 710T	36 MHz ARM 710T	36 MHz ARM 710T	190 MHz StrongArm	190 MHz StrongArm
Java	JDK1.1	JDK1.1	JDK1.1	JDK1.1	PersonalJava
Input	Keyboard, pen	Keyboard, pen	Keyboard, pen	Keyboard, pen	Pen

Allin, Table 7.1

(3) Mobile Device Architecture Limitations [18A]-[18B]

[18A] at least one processing element comprising a processor coupled to a memory; and [18B] at least one network interface;

98. "Mobile Device" claim 18 further includes limitations [18A] and [18B] which recite the high-level architecture of a "*mobile device.*" I note that claim 1 does not include these limitations. Neither Randall nor Forsyth explicitly disclose the architecture of the Symbian wireless information device. However, it would have been obvious to a POSITA that a "*mobile device*" includes a "*processing element comprising a processor coupled to a memory*" and a "*network interface*," based on the teachings of Randall and Forsyth and general knowledge of a POSITA.

99. The '039 patent provides a high-level "implementation" of an information processing element, shown in Figure 1B, applicable to mobile devices,

servers, and the user terminals. (EX-1001, 4:48-52.) The implementation has only three components—a processor 22, a memory 24, and a network interface 25 which "provides an interface to the wireless network 12 or Internet 14." (EX-1001, 4:52-65.)

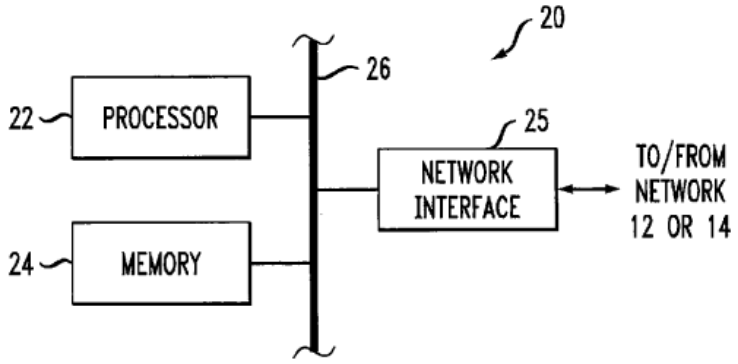

'039 Patent, Figure 1B

100. Both Randall and Forsyth suggest to a POSITA that the Symbian wireless information devices ("*mobile device*") each includes a "*processing element*" with "*a processor.*" Both Randall and Forsyth describe that a wireless information device uses the Symbian OS. (Randall, 1:17-19 ("The most capable of these devices utilise operating systems and related applications such as the Symbian platform from Symbian Limited of the United Kingdom."); Forsyth, 1:29-32 ("The most capable of these devices utilise operating systems such as the Symbian OS™ operating system from Symbian Limited of the United Kingdom.").) Both further disclose applications running on the Symbian OS, including, e.g., a client-side component of Forums. (Forsyth, 2:47-48 ("Forums runs on the object based

operating system Symbian OS."); Randall, 5:22-24 ("user can then download the enhancements to applications resident on its device, or entirely new applications …").) Randall also refers to "[s]oftware for a wireless information device" which "run[s] on the device." (Randall, claim 53.) Forsyth similarly refers to a "wireless information device programmed with computer software." (Forsyth, claim 19.) A POSITA would have understood that a device's OS and applications are software that execute on "*a processor*" within a "*processing element.*"

101. Both Randall and Forsyth also disclose or suggest that the Symbian wireless information devices include a "*processing element*" with "*a memory*." The '039 patent broadly describes memory as "electronic memory such as random access memory (RAM), read-only memory (ROM), disk-based memory, or any other type of storage device, as well as portions or combinations of such devices." (EX-1001, 4:60-63.) Forsyth notes that the server "archive[s] the distant history of a thread, for a client to access on request, in order that the **memory** constraints of the handheld devices can be respected." (Forsyth, 4:49-52.) Randall describes a wireless information device "caches" information: "Since Alice's wireless information device typically includes a cached version of all of her information which is on the central server …" (Randall, 15:5-6); "Client software can also automatically follow links and either cache them in advance to increase the speed of access to related information …" (Allin, 53:5-6.) Caching data requires memory.

102. Should PO contend "*memory*" of the "*processing element*" must store instructions executed by the processor, such memory would have been obvious, if not inherent, in Randall and Forsyth which both teach an OS and software running on the wireless information device. Because the software/applications executing on a processor are stored in memory and also access information stored locally in memory, a POSITA would have understood Randall and Forsyth further disclose or suggest the "*processor* [is] *coupled to a memory.*"

103. Randall and Forsyth each disclose or at least suggests to a POSITA that the Symbian wireless information devices include a "*network interface*" within the "*processing element*." The '039 patent describes a network interface generally as "provid[ing] an interface for the processing element 20 to the wireless network 12 or Internet 14." (EX-1001, 4:64-65.) The '039 patent does not provide any further details regarding the "*network interface*." Both Randall and Forsyth disclose that the wireless information devices are "able to communicate in any manner over any kind of network, such as GSM or UMTS, CDMA and WCDMA mobile radio, Bluetooth, [802.11,] IrDA [(infared)] etc." (Randall, 1:11-13; Forsyth, 1:22-25 (same).) To access these networks, the wireless information device requires an interface to the network—a "*network interface.*" Indeed, Randall specifically refers to the "GSM/GPRS interface." (Randall, 40:1-2.) Based on the disclosure of communications over a network and Randall's reference to a GSM interface, a

POSITA would have understood the wireless information devices have a "*network interface.*"

104. Moreover, it would have been within the general knowledge of a POSITA that a mobile device includes a "*processor coupled to a memory*" and a "*network interface.*" As I discussed in §III.B, a POSITA has a "bachelor's degree in electrical engineering, computer science, or similar field, with two years of experience in developing and implementing network-based computer systems that interact with mobile devices, such as systems for storing and retrieving information over the Internet or communicating using the Web using wireless mobile devices." The high-level design of a processing element shown in the '039 patent would have been well-known to such an individual. I provide a sampling of examples of mobile devices with this general architecture below.

105. **U.S. Patent 6,947,396 to Salmi ("Salmi"; EX-1020):** Salmi, filed December 1, 2000 and assigned to Nokia Mobile Phones Ltd. ("Nokia"), describes "parts that are essential for the operation of a [WAP-enabled] wireless terminal." (Salmi, 14:53-55.) The wireless terminal includes an MPU, preferably a microprocessor, controller or digital signal processor (DSP) coupled to a memory (ROM and RAM), and a radio part that "transmit[s] radio frequency messages, such as messages according to WAP protocol." (Salmi, 14:55-65.)

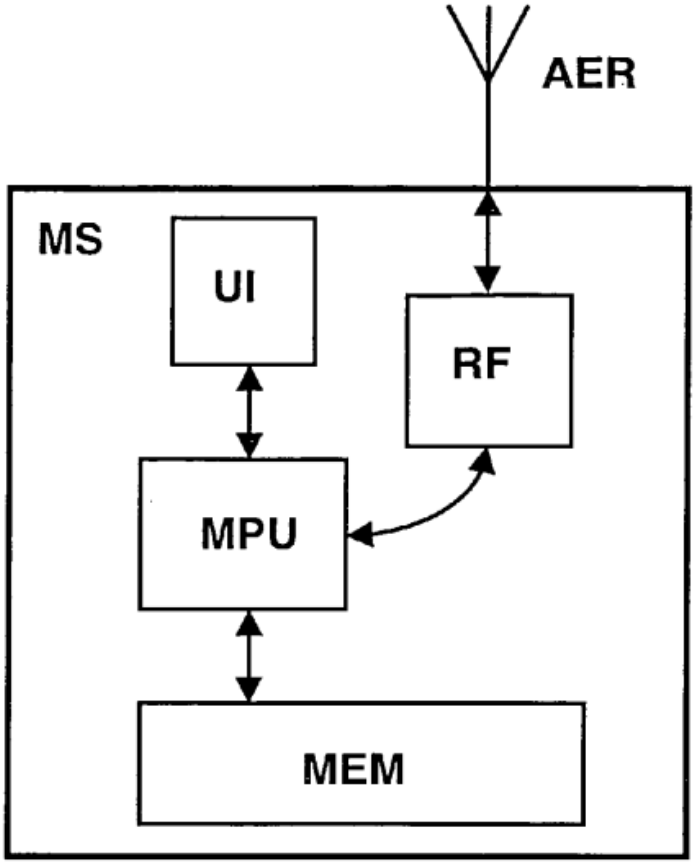

Salmi, Figure 6

106. **U.S. Patent 7,031,718 to Jouppi, et al. ("Jouppi"; EX-1021):** Jouppi, filed March 13, 2002 and also assigned to Nokia, describes a mobile terminal, "such as [the] Nokia 9210 Communicator." (Jouppi, 7:52-57.) As I discussed above, the Nokia 9210 Communicator runs the Symbian OS. The wireless terminal includes "one or more processors CPU, DSP, memory means MEM" and "a radio part RF for communication with the base station 2." (Jouppi, 7:57-61.)

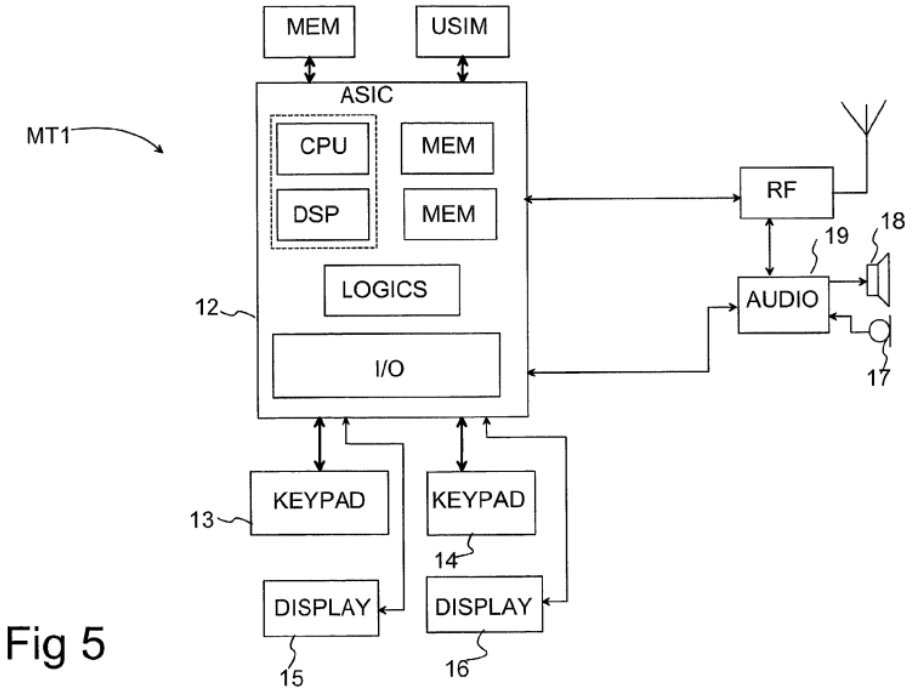

Jouppi, Figure 5

107. **U.S. Patent 7,092,495 to Kraft, et al. ("Kraft" ; EX-1022):** Kraft, filed on December 13, 2001 and assigned to Nokia Corporation, describes the "most important parts" of a GSM mobile phone. (*See* Kraft, 4:4-6.) The GSM mobile device includes a processor coupled to RAM and ROM memory and transmitter/receiver circuit 19. (Kraft, 4:6-20.) Kraft also mentions the Nokia 7650 smartphone, which as I discussed above, ran the Symbian OS.

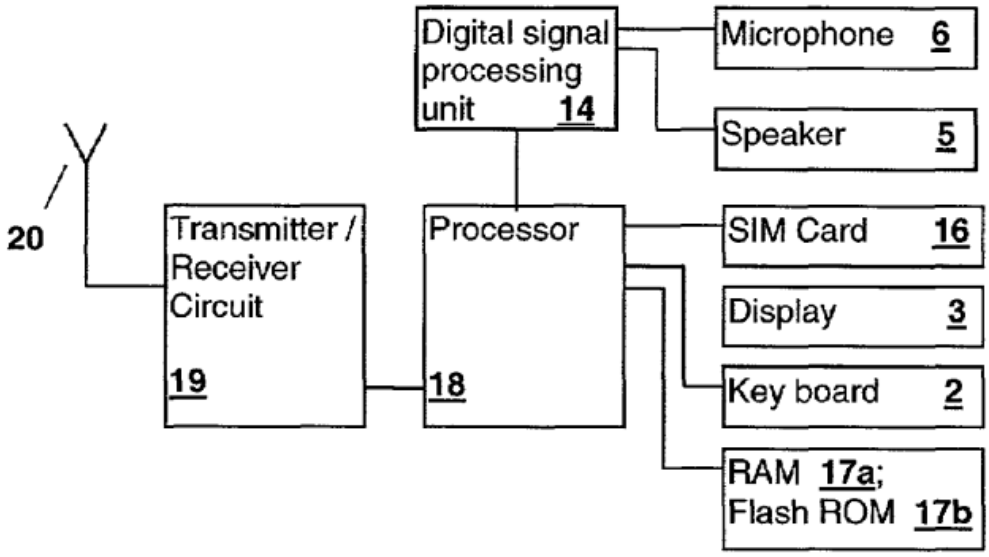

Kraft, Figure 2

108. **U.S. Patent 6,788,949 to Bansal ("Bansal; EX-1023"):** Bansal, filed on September 21, 2000, describes a mobile information device supporting "mobile chat sessions." (Bansal, 1:13-15.) Bansal explains that "a typical information device", illustrated in Figure 5 (below), includes "**well-known** components such as one or more network interfaces 5100, one or more processors 5200, one or more memories 5300 containing instructions 5400, and/or one or more input/output ("I/O") devices 5350." (Bansal, 6:66-7:5.)

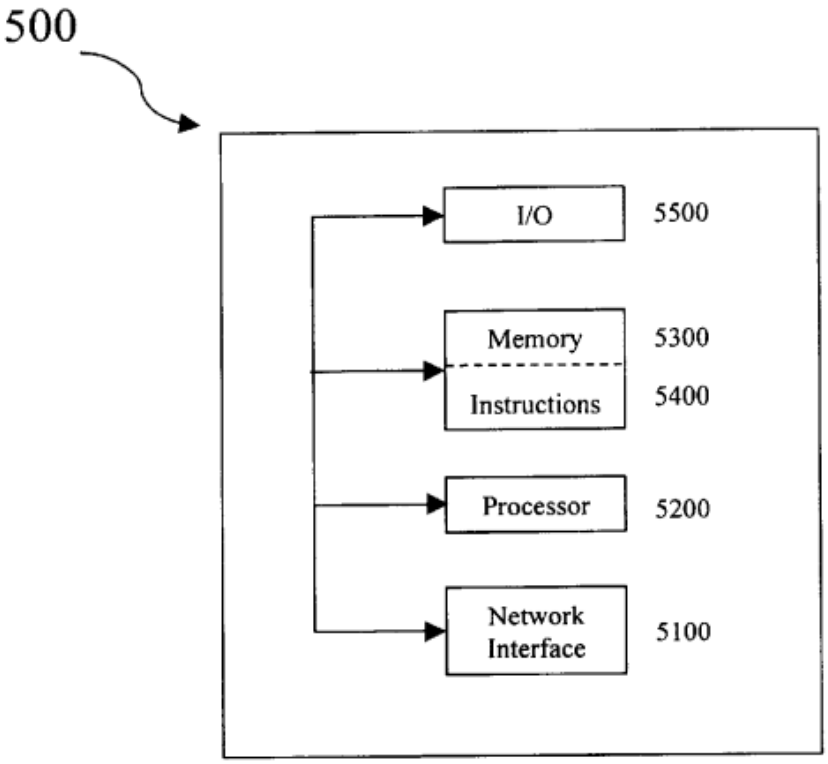

Bansal, Figure 5

109. Additionally, Pelkey and Eck which I discuss in Ground 2 discloses a portable device having a CPU and memory. (*See, e.g.,* Eck, 3:46-47; Pelkey, 5:7-14.)

110. Finally, Allin confirms Symbian wireless information devices included a processor and memory. (*See* Allin, Appendix B (listing memory and processor specifications for mobile devices).) For example, as shown below, the Nokia 9210 Communicator had an ARM 9-based RISC CPU processor with 32 MB of memory (ROM and RAM). (Allin, 458-59.)

Nokia 9210 Communicator	
Processor	32-bit ARM9-based RISC CPU
Mobile Standard	EGSM 900/1800 (Enhanced GSM), HSCSD at up to 43.2 kbps
ROM	14 MB
RAM	2 MB + 16 MB MultiMediaCard
SD-RAM	8 MB
Screen	Color screen (4096 colors) 640 × 200 pixels
Ports	IrDA, Ir-TranP, Cable (DLR-2L)
Pointing Device	Not needed (soft keys)
Expansion	Memory card slot (MultiMediaCard standard)
Power	Battery BLL3 1300 mAh Li-Ion, Talktime 4–10 hrs, standby 80–230 hrs
Size	158 × 56 × 27 mm
Weight	244 g
Website	www.nokia.com

Allin, Excerpts from Appendix B

* * *

111. Thus, a "*mobile device*" that comprises "*at least one processing element comprising a processor coupled to a memory*" [18A] and "*at least one network interface*" [18B] would have been obvious over Randall and Forsyth in light of the general knowledge of a POSITA.

b) Processing Limitations [1A]-[1E]/[18C]-[18G]

(1) "Captur[ing]/[e] Content" Limitations [1A]/[18C]

[1A]	capturing content at a mobile device;
[18C]	capture content at the mobile device;

112. The combination Randall and Forsyth discloses "*captur[ing]/[e] content at a/[the] mobile device*" [1A]/[18C]. The '039 patent provides examples of content: "The content management site allows **content such as** data, media, multimedia, messages, news, features, events, polls, competitions and advertising." (EX-1001, 10:11-17.) And when describing the content authoring process, the '039 patent further provides that "[s]electable or uploadable media may include … a document, a video, a photo, a graphic, a music file, etc." (EX-1001, 16:56-58.)

113. I discussed in §IV.B.1.a.(2) above that the combination of Randall and Forsyth discloses a "*mobile device.*" Randall and Forsyth each discloses capturing multiple types of content at the mobile device. For example, Forsyth discloses that in Forums "**personal content** such as photographs, opinions, music playlists, music tracks etc." is shared "amongst a pre-defined group." (Forsyth, 4:9-11.) Forsyth's Figure 13 (reproduced below), is a table listing applications/features "enabled using Forums." (Forsyth, 4:66-67.) This table shows a sampling of the content supported within Forums. For example, in the "Multimedia" row, Forsyth identifies "[p]hoto posting, storing, commenting, [and] vandalising" and "voice messages." (*See* Forsyth, Figure 13.) The mention of commenting on photos indicates a forum member posts a message (message content) and vandalizing indicates a forum member posts graphic content. In the "Interaction" row, Forsyth identifies "[l]inks/bookmarks" and "[r]ating[s]." (*See* Forsyth, Fig. 13.) Links and bookmarks

are examples of data content and ratings falls into the category of polls. I specifically discuss capturing a photo, a message, a music file, and a graphic at a mobile device below. However, other examples from Randall and Forsyth are equally applicable.

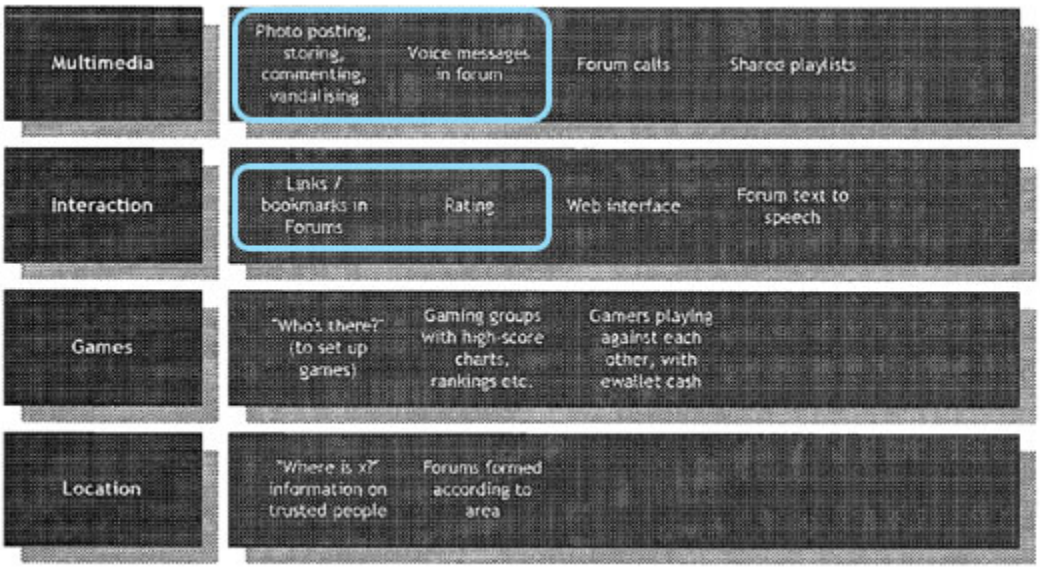

Symbian Forums—Forsyth, Figure 13

(a) Capturing a Photo

114. Randall and Forsyth each discloses capturing a photo at a wireless information device. Randall describes a function called "Take a picture" which involves photo capture, upload, and storage. (Randall, 80.) This function is supported by "a special type of mobile phone, with a photographic lens." (Randall, 80.) I note the Nokia 7650 wireless device that I described above is an example of a commercially available device that included digital imaging (via a digital camera). In the "Take a picture" function, Randall directs the user to "[p]oint the phone at something that interests you or makes you laugh, press the button, and it takes a

digital picture which you can send to your friends." (Randall, 80.) Randall also describes a "[p]ersonal view" feature utilizing a "[c]amera in the wireless information device" for "posting images" to the server. (Randall, 74.)

115. Forsyth similarly discloses an exemplary Forum for "Discussion of Photos" (Scenario 2) which uses the function of taking a picture at the wireless device. For example, a "user is on holiday, and he takes a few photographs of the beach with his digital camera." (Forsyth, 7:30-31.) He then "uploads them to his remote storage area", "creates a Forum message based on the photographs" and "sends it to a group." (Forsyth, 7:32-35.) After the group is created, "[s]ome people post their own photos back." (Forsyth, 7:41-42.) In the exemplary Forum "A Digital Memento from a User's Birthday" (Scenario 4), Forsyth teaches that Forum members post "photos." (*See* Forsyth, 9:5-35.) As I discussed above, Randall describes a mobile device integrating a digital camera. (Randall, 80.) Thus, the combination of Randall and Forsyth discloses capturing a photo at the mobile device either via an integrated camera or via a camera interfacing with the mobile device.

(b) Capturing a Message

116. Randall and Forsyth each discloses capturing a message at a wireless information device. Forsyth describes Forums as "an easy to understand **messaging** tool that facilitates open discussion amongst a group." (Forsyth, 5:27-29.) Forsyth further describes support within Forums for "group based text messaging" and

"group based multi-media messaging." (Forsyth, 3:36-44.) Randall similarly describes that Forums provides real-time messaging. As described by Randall, a user can log onto a Forum and exchange messages "with those also on the channel." (Randall, 41:1-2.) As discussed above, in addition to text messaging, Forums discloses that "users may send text or voice messages to a Forum from any communications device." (Forsyth, 12:65-67.)

117. Forsyth describes text messaging within a Forum in exemplary "group based text messaging" (Scenario 1). (*See* Forsyth, 5:35-7:2.) In this Scenario, after the Forum is created, a Forum member is "shown the messages posted to that Forum." (Forsyth, 6:38-40, Figure 7 [below-top].) Through this interface, the user can "make a context menu appear" which allows the user to "carry out additional tasks related to the Forum." (Forsyth, 6:44-49, Figure 8 (below-left).) "If a user selects 'Forum Reply' then a new message is posted to the Forum" including posting a response. (Forsyth, 6:54-56; Figure 9 (below-right).) As shown in Figure 9, the user is presented with a box into which text can be inserted. The text inserted into the box is captured by the device and inserted into a message transmitted to the server via, e.g., WAP protocol for WAP-enabled devices or GSM-SMS messaging. Thus, the message entered into the user device is captured at the wireless information device through the text box input.

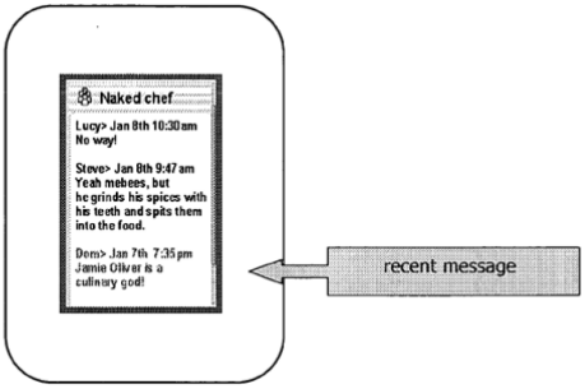

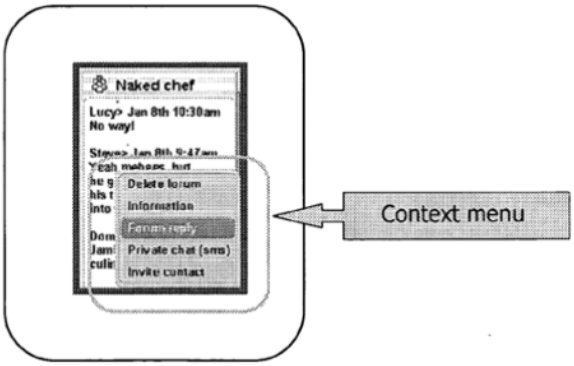

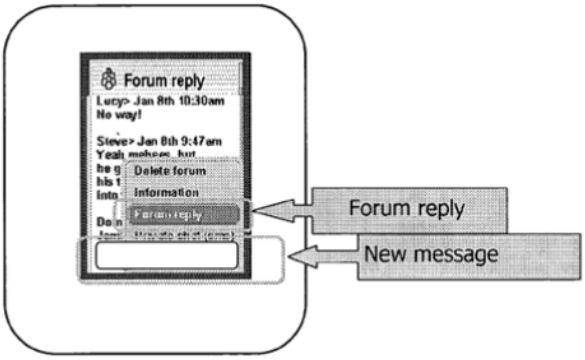

Symbian Forums—Forsyth, Figure 7 (top); Figure 8 (bottom-left)
Figure 9 (bottom-right)

(c) Capturing a Music File

118. Forsyth discloses capturing a music file at the wireless information device. Forsyth teaches the central server "act[s] as a store for resources which group-members may wish to discuss **and share** (e.g. personal information, personal photographs, **music**, web sites etc)." (Forsyth, 3:31-34; *see also*, Forsyth, 4:9-11 ("The group object could also be used to share, amongst a pre-defined group, personal content such as photographs, opinions, music playlists, **music tracks** etc.").) Forsyth describes a "Radio Forums" example in which "users submit tracks

to a communally-built-up playlist" which is achieved "by creating a link between the user's store of digital music and the playlist stack." (Forsyth, 11:41-47.) Forsyth further describes an exemplary Forum (Scenario 4) where "[p]eople post MP3s of the kind of music played at each club." (Forsyth, 9:21-22.) While not explicit, a POSITA would have understood the shared track/MP3 (music file) is captured in some manner on the user's device, either by recording or via data transfer from another device, so that it can be uploaded to the server.

119. Randall also mentions the function called "[s]end me something" which allows a user "to send someone pictures, words, video clips or **music** while you are talking to them." (Randall, 80:1-5.) While mentioned in the context of an on-going communication (e.g., a voice call or chat session), Randall describes "send me something" generally as a feature that provides "[r]icher [c]onversations." (*See* Randall) Therefore, a POSITA would have understood and been motivated to also use this function as part of Forums which supported chat and voice conversations among group members.

(d) Capturing a Graphic

120. The combination of Randall and Forsyth discloses capturing a graphic. For example, Randall describes capturing a graphic via a "[w]rite-[o]n" function. (Randall, 79.) With this function, "[i]nstead of text-messaging and keying-in your message, a new device which is a cross between a mobile phone and a palm pilot

will let you write on the screen – in your own handwriting – and send the entire image as a message instead." (Randall, 79) And as I mentioned above, Forsyth discloses "vandali[z]ing" a picture posted in a Forum (*see* Forsyth, Figure 13), which I understand involves layering a graphic on an existing picture.

* * *

121. Thus, the combination of Randall and Forsyth discloses "*captur[ing]/[e] content at a/[the] mobile device*" [1A]/[18C].

(2) "Identifying" Limitations [1B]/[18D]

[1B] identifying a previously established application-based information channel into which the captured content is to be inserted, the identified application-based information channel permitting interaction between a user of the mobile device and one or more additional users [18D] identify a previously established application-based information channel into which the captured content is to be inserted, the identified application-based information channel permitting interaction between a user of the mobile device and one or more additional users;

(a) "previously established application-based information channel … permitting interaction"

122. As discussed in §III.D.4, the parties in the Meta-MDT-IPR agree the term "*application-based information channel*" should be construed as "a computer program-based medium for transferring information." The combination of Randall and Forsyth discloses an "*application-based information channel*" under this construction.

123. Symbian Forums, described by Randall and Forsyth, is an "*application*" with a program component at the wireless device and a program component on the server: "FIGS. 2-11 are screen shots of the display of a wireless information device running the **Forums application**." (Forsyth, 4:62-63; *see also* Forsyth, 2:47-48 ("Forums runs on the object based operating system Symbian OS."), 4:64-65 ("FIG. 12 is a table showing typical features of three generations of Forums applications"); Randall, 3:17-19 ("The present invention allows a huge range of new applications requiring access to shared content to be rapidly and cheaply constructed and rolled out since the data infrastructure which allows content to be shared is pre-fabricated."), 9:11-13 (system includes "wireless information devices running applications which access the information held on the extensible databases running on central servers"), 40:15-41:14 (describing Forums application).)

124. Forsyth describes Forums as "new approach to group communication … designed specifically to allow current and very popular internet type services (e.g. chat/instant messaging between groups) to be handle[d] effectively between mobile devices and to enable a new generation of group based communication services." (Forsyth, 2:40-47.) As explained by Forsyth, "Forums offers many advantages to group communication since it is an easy to understand messaging tool that **facilitates open discussion amongst a group and allows multiple chat-style conversations**

to take place simultaneously." (Forsyth, 5:27-30.) The Forum scenarios presented in Forsyth, "group based text messaging" (Forsyth, 5:35-7:13), "Discussion of Photos" (Forsyth, 7:18-57), "Social Scheduling" (Forsyth, 7:58-9:4), "Digital Memento from a User's Birthday" (Forsyth, 9:5-35), as well as the other scenarios discussed, provide additional examples of how a Forum permits communication (interaction) among its members.

125. Within the Forums application, a user has the ability to create an individual Forum open to members of a specified group (a Private Forum) or to the public (a Public Forum). (Forsyth, Appendix 1, 13:60-18:18; Randall, 24:13-17.) Forums also provide the ability for the server to create a Forum based on criteria such as location of users. (*See* Forsyth, 13:29-52.) Each individual Forum is a "*channel*" that "*permit[s] interaction between a user of the mobile device and one or more additional users*" through information (e.g., content) sharing. Specifically, Randall describes that "a forum allows **several people** to be part of a '**channel**' or room, which is usually themed; for instance supporters of a football team may meet in a channel devoted to that team to discuss the team." (Randall, 40:17-19; *see also* Randall, 82 ("Old Friends: A function that easily lets you create circles of friends you wouldn't normally keep in touch with – for example people you met on holiday, or at college etc." and "[y]ou simply create & name a group of people, which you can then text in 6 months or 6 years time" … "New circles of people: A function that

lets you create circles of contacts of people with similar interests who you may never have met before, but have picked up their text details on a website where you share interests in common eg [sic] a particular sport or hobby"), 83 ("Text mates: A service that lets a group of friends communicate at any time of the day via a chat site on their mobile phones.").)

126. Forsyth describes creation of a Forum in "group-based text messaging" (Scenario 1). In this example, when creating a Forum, the user "has to select whom he wishes to invite." (Forsyth, 5:50-51; Figure 3 (below-left).) As shown in Figure 3, the user selects Lucy and Steve as participants in the Forum. (Forsyth, 5:52-63.) The new Forum, illustrated in Figure 4 (below-right), has the title ("Naked Chef"), the message itself ("Jamie Oliver is a culinary god"), and indicates the Forum participants selected to receive the message (Lucy and Steve). (Forsyth, 5:64-67.)

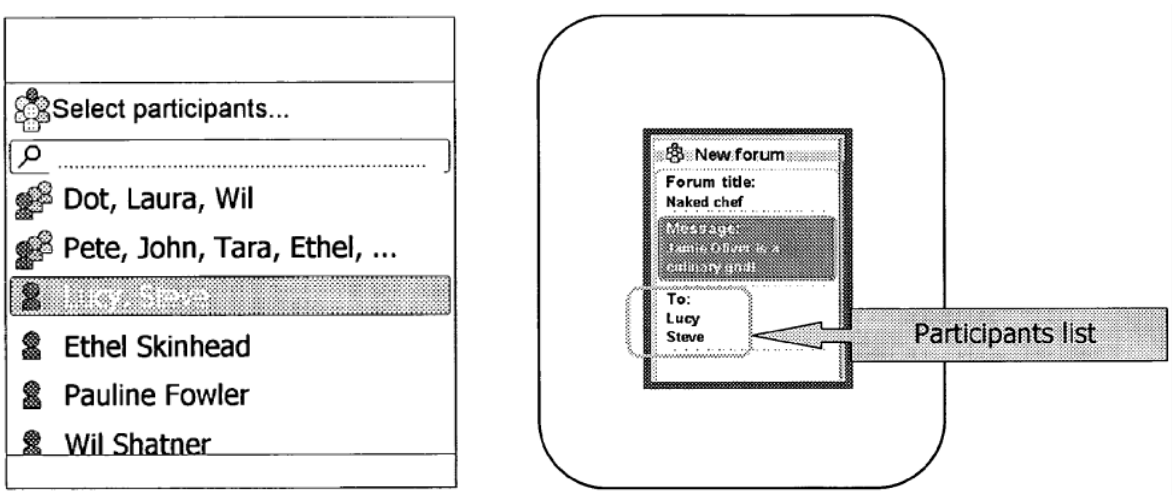

Symbian Forums—Forsyth, Figure 3 (left), Figure 4 (right)

127. As shown in the Figures above from Forsyth which depict the user interface of the wireless information device, the Forum creator is "*a user of the mobile device*." (*See* Forsyth, 4:61-62 ("FIGS. 2-11 are screen shots of the display of a wireless information device running the Forums application.").) The identified participants, who will become forum members if they agree to participate in the Forum, are the "*one or more additional users.*" After the Forum is created, members can send new messages "to the server, which then forwards on the increment [i.e., the new Forum content] to all the people on the current (server-maintained) address list." (Forsyth, 6:18-22.)

128. After the creator selects participants, the initial message and the participant list are provided "to the message server" as a message/communication object and a group object respectively. (*See* Forsyth, 6:1-8.) The message/communication object is used to store the communication thread for the Forum. (Forsyth, 6:9-14.) The group object defines the Forum's members and is application independent, meaning that another application can use the object to define group membership. (Forsyth, 5:15-26.) The server "stores these two objects and forwards a copy of the message to each of the people on the address list, along with an abstracted version of the address list." (Forsyth, 6:9-14.) The invited participants can "decline to participate" and if so are then "removed from the address list on the server." (Forsyth, 6:15-17.)

129. Thus, a Forum (e.g., "Naked Chef" Forum) created in and available through Symbian Forums provides a means to share content (information) with identified members of the Forum—i.e., it is mechanism through which content/information is transferred to Forum members. It allows creation of individual topical-based Forums through which users can share information (such as the "Naked Chef" Forum described above). By agreeing to participate in a Forum, an individual user is essentially "tuning into" the Forum to receive content published to the Forum by other members which is provided to the user's device either by a push mechanism or by a pull mechanism. (*See* Forsyth, 6:15-26.) Therefore, an individual Forum is an "*application-based information channel*" under the agreed upon Meta-MDT-IPR construction ("a computer program-based medium for transferring information").

130. Claims 1 and 18 specify that the "*application-based information channel*" is "*previously established.*" This simply indicates that an "*information channel*" persists after its creation so that information/content can continue to be published to the "*information channel*" by its members and shared among the group. Both Randall and Forsyth disclose this.

131. A Symbian Forum is persistent—it remains in existence after the initial message is transmitted to the participants. (Forsyth, 3:6-9 ("Being able to make such groups persistent (i.e., group members can still be reached even if they are not sitting

at their desks and working on their PCs) using wireless information devices again increases the importance of the group.”).) Forsyth describes that members of a Forum can “continue[] to return to it from time to time and make postings because they knew that this was a way of staying in touch with a whole group of people.” (Forsyth, 9:40-44.) For example, as explained by Randall, a user can log on to a forum and “exchange and receive messages with those also on the channel.” (Randall, 41:1-2.)

132. Forsyth also discusses the use of a Forum to create a “permanent community.” (Forsyth, 9:37.) For example, members of a Forum can “continue[] to return to it from time to time to make postings because they [know] that this was a way of staying in touch with a whole group of people.” (Forsyth, 9:40-45.) This is also illustrated in the “Naked Chef” example from Forsyth. As shown in Forsyth’s Figure 6 (below), the user interface of the Forums application displays a listing of established Forums of which the user is a member (e.g., “Pub on [F]riday”, “Naked chef”, “Super Eagles!”, “Wanna wager?”). (*See* Forsyth, 6:28-35.) The view shown in Figure 6 “distinguishes Forums with unread (new) messages from those with read (old) ones,” indicating a Forum remains active after its establishment. (*See* Forsyth, 6:29-32.)

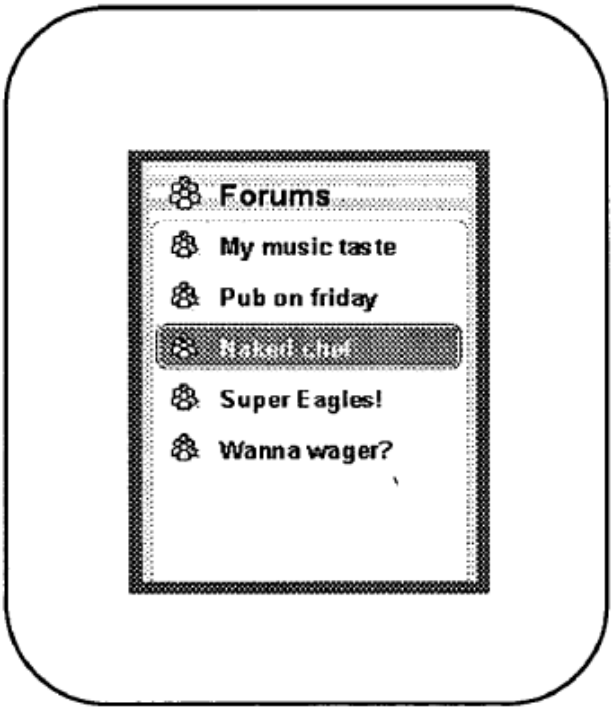

Symbian Forums—Forsyth, Figure 6

133. Thus, the combination of Randall and Forsyth discloses "*a* ***previously established*** *application-based information channel*" that "*permit*[s] *interaction between a user of the mobile device and one or more additional users*."

(b) "identify[ing] a previously established application-based information channel"

134. Symbian Forums, as discussed in Randall and Forsyth, allows a user to "*identify[] a previously established application-based information channel into which the captured content is to be inserted.*"

135. Symbian Forums, described by Randall and Forsyth, allows a user to "share amongst a pre-defined group, personal content such as photographs, opinions, music playlists, music tracks etc." (Forsyth, 4:9-11.) That is, Symbian Forums

allows a wide array of content to be published to a Forum and distributed among the Forum's members. Randall and Forsyth describe several techniques for identifying the "*information channel*" (Forum) into which a member desires content "*to be inserted*" (e.g., published to).

(i) Identifying Via a User Interface

136. A user identifies a previously established Forum through the user interface presented by Forums on the device. Through the user interface associated with a specific Forum, the user has the option of posting content to the Forum. Exemplary user interfaces presented to the user are described in the text-based messaging Scenario 1 of Forsyth. As I discussed in §IV.A.1.c.(2), when WAP is used to communicate with the server, the interfaces are either presented by a client-application supporting WAP or via individual pages presented via a microbrowser. When GSM-SMS messaging is used (without WAP), the interfaces are presented by a client application.

137. A Forums user is presented with a list of his/her Forums on a screen such as the screen shown in Forsyth's Figure 6 (reproduced below). The user selects one of these individual Forums and navigates to a screen associated with the Forum (e.g., Forsyth Figure 8) where the user can enter and post content. (*See, e.g.,* Forsyth, 6:28-35.) I note that the later discussions of Forum scenarios in Forsyth omit the details of creating a Forum and navigating to a Forum via the user interface and

instead focus on functionality available through the exemplary Forum. By selecting a Forum from the list of available Forums, the user "*identif[ies] a previously established application-based information channel.*"

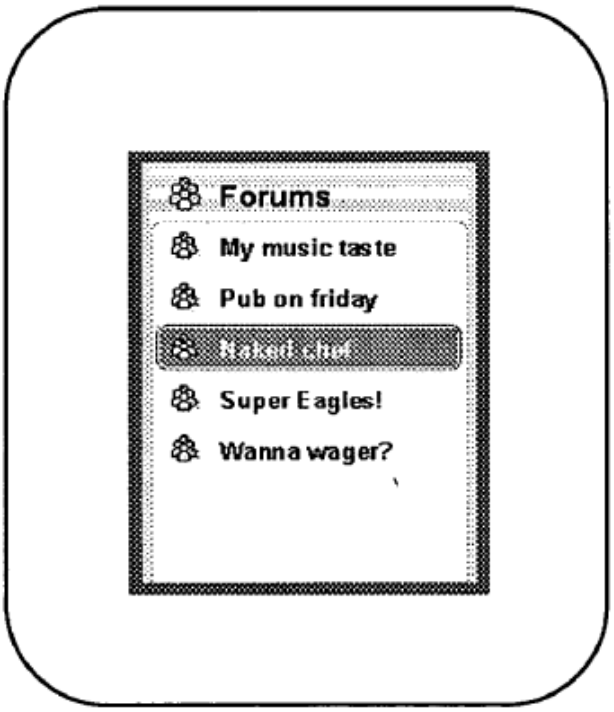

Symbian Forums—Forsyth, Figure 6

138. Both Randall and Forsyth disclose that content captured at the mobile device is to be inserted into a Forum. I describe this below in the context of the captured photo/image, captured message, and captured graphic discussed in §IV.B.1.b.(1)

139. **Captured Photo:** Forsyth describes several examples of Forums where users post "photos" including "Discussion of Photos" (Scenario 2) and "Digital Memento from a User's Birthday" (Scenario 4). For example, in Scenario 2 after the

group is created and an initial photo shared, "[s]ome people post their own **photos** back." (Forsyth, 7:41-42.) And in Scenario 4, Forum members "post MP3s of the kind of music played at each club, and links to the club's pages" (Forsyth, 9:21-24), "**photos**" (Forsyth, 9:29 (emphasis added)), and even "the bar bill" (Forsyth, 9:30). A POSITA would have understood that the "Discussion of Photos" Forum and the "Digital Memento from a User's Birthday" Forum are identified via the user interface in the manner discussed in Scenario 1. The mobile device captures the photo, as I discussed above for limitations [1A]/[18C], for "post[ing] to the Forum"—i.e., the captured photo "*is to be inserted*" into the Forum.

140. **Captured Message:** Scenario 1 of Forsyth provides an example of identifying a Forum into which captured message content is to be inserted. As I discussed in §IV.B.1.b.(1).(b) after entering the Forum ("Naked Chef"), the user can select "Forum Reply" as shown in Figure 9 (below-right). (Forsyth, 6:53-57.) The user interface then captures the user-entered message for "post[ing] to the Forum"—the captured message "*is to be inserted*" into the Forum.

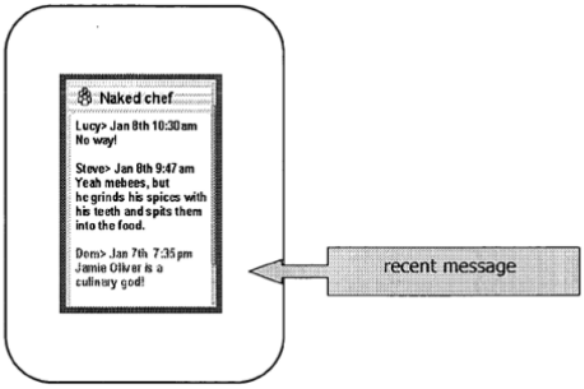

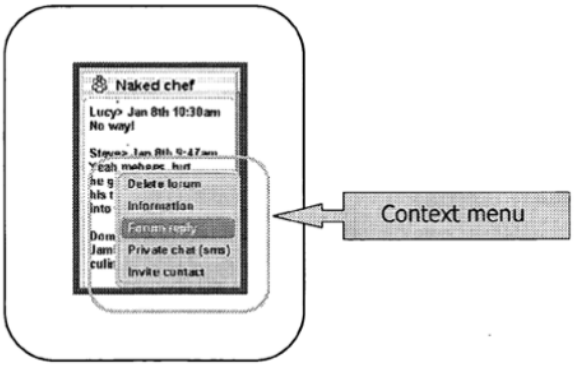

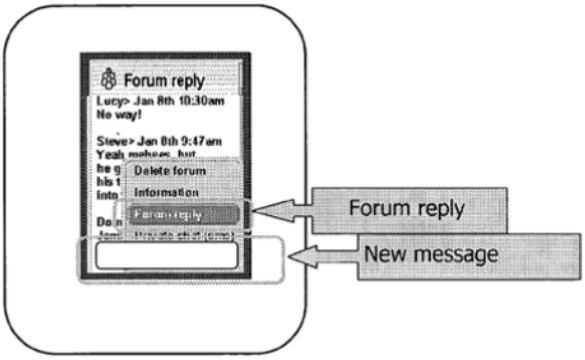

Symbian Forums—Forsyth, Figure 7 (top); Figure 8 (bottom-left)
Figure 9 (bottom-right)

141. **Captured Music File:** Forsyth also describe examples of Forums where users post "music files." For example, in "Digital Memento from a User's Birthday" (Scenario 4), Forum members "post MP3s of the kind of music played at each club." (Forsyth, 9:21-22.) And Forsyth describes that a "Radio Forum" can be created where "users submit tracks to a communally-built-up playlist." (Forsyth, 11:44-47.) A POSITA would have understood that the Scenario 4 Forum and a Radio Forum are identified via the user interface in the manner discussed in Scenario 1. The mobile device captures the music file, as I discussed above for limitations

[1A]/[18C], for "post[ing] to the Forum"—the captured music file "*is to be inserted*" into the Forum.

142. **Captured Graphic:** In my discussion for limitations [1A]/[18C], I described a "write-on" function allowing graphics to be added into a discussion (Randall, 79) and a function allowing a group member to "vandali[z]e" a photo posted within a Forum (Forsyth, Figure 13). Although not mentioned in an exemplary Forum scenario, a POSITA would have understood that a user can identify a Forum via the user interface into which these exemplary "graphics" are "*to be inserted.*"

(ii) Identification via Database Access Rights

143. A user also identifies a Forum when the user specifies one or more groups allowed access to his or her content stored in the user's database record on the server. As I discussed in §IV.A.1 Randall adds a "universal data infrastructure for wireless information devices" to the Symbian client-server infrastructure used to provide Forums. (*See* Randall, 3:10-11.) In the combination, Forsyth utilizes this data infrastructure to deliver Forums enhanced through the use of group objects, as I discussed in §IV.A.3 A core component of this data infrastructure ("the heart") is the database located on a "remote server" which "acts as a data repository open to any application which can structure data in conformance with a meta-language schema" and "is capable of being used as the central resource which allows data

sharing for any new application." (Randall, 4:9-12; *see also* Randall, 66:1-70:16.) Forsyth similarly mentions that a central server "act[s] as a store for resources which group-members may wish to discuss and share (e.g., personal information, personal photographs, music, web sites etc.)." (Forsyth, 3:31-34.)

144. Randall's Figure 4 (reproduced below) illustrates the client-server infrastructure including the centralized datastore used to provide the Forums service to users. Through Randall's data infrastructure, a user "can enter personal information onto a part of the data structure associated with that [user]." (Randall, 4:24-25.) The user also defines access rights to "[e]ach piece of data on the server" by specifying the "list of groups ('i-Groups') allowed to access the data." (Randall, 66:3-10.)

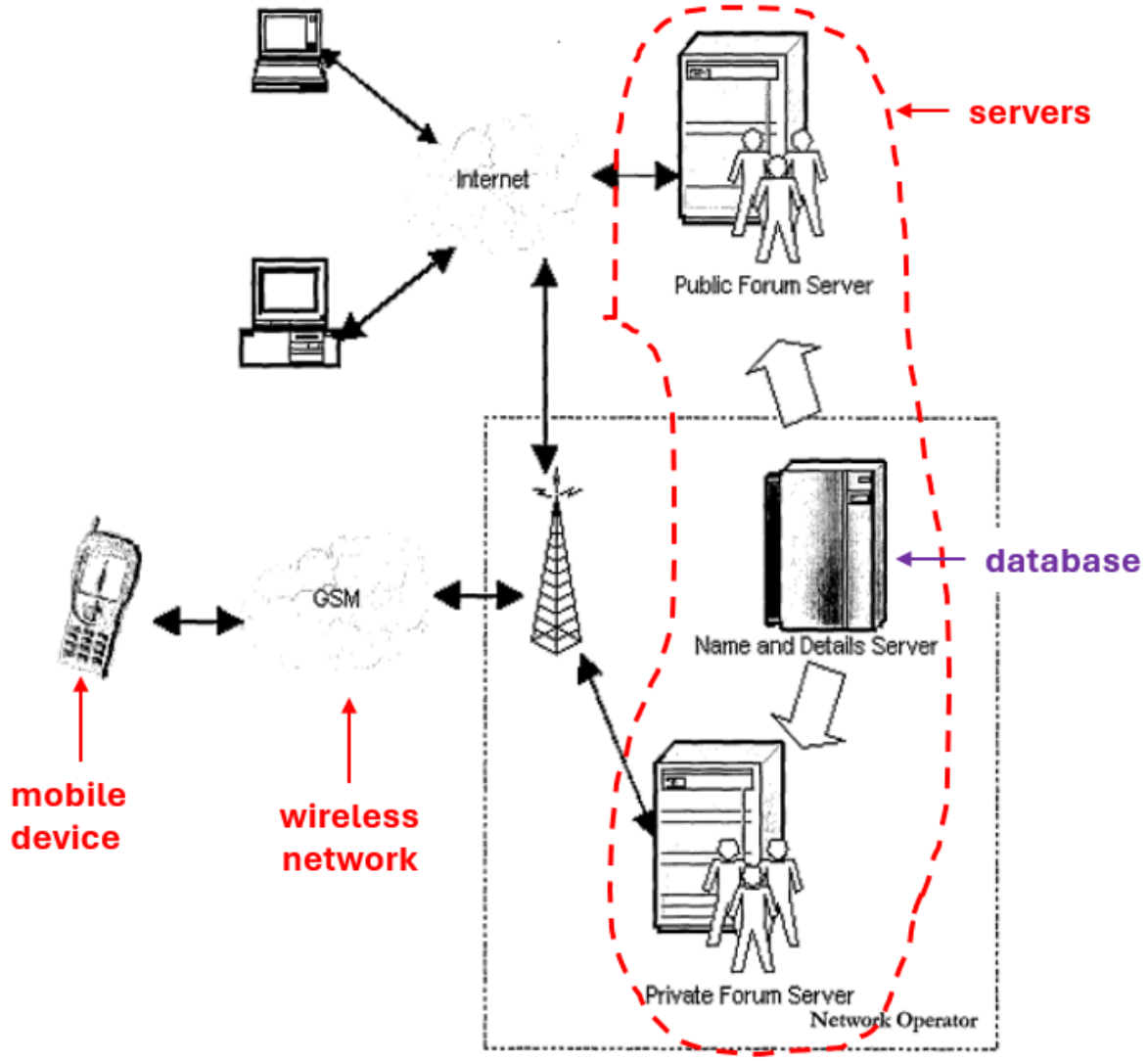

Symbian Forums—Randall, Figure 4

145. Information stored in the centralized database used for Forums includes captured content. Randall explains that "[u]sers must be able to share any of their content or activities with individuals and groups with ease." (Randall, 32:21-22.) Specifically, "[u]sers must be able to share content local to the device and have any [content] uploaded to a server handled automatically." (Randall, 32:26-27.) A

POSITA would have understood that such local content is captured by the device, e.g., via the integrated camera. Uploaded user content is stored in a database entry associated with the user.

146. Randall's Table 1 (reproduced below) shows an exemplary view of data associated with a user, Alice. As shown in Table 1, a piece of stored data "has an associated tag (or field/attribute)" such as "My photo" or "Childhood photo." Randall explains that the database is not limited to the tags (field/attribute) used in Alice's record and the "application owning the category is free to invent whatever tags it chooses and to extend the database." (Randall, 66:10-14.) Therefore, in addition to photos, a POSITA would understand that the database would store other personal user content including a user's music files, messages, graphics, opinions, playlists, etc.

Table 1

Alice's iData			
Field/Attribute	**Category**	**Details**	**i-Groups**
First name	personal	Alice	all
Family name	personal	Edwards	all
Title	work	European Marketing Manager	all
Company Name	work	Wireless Information Device gets R Us	all
Company Address	work	1 Science Park Rd, London, N1	all
Company E-mail	work	alice.edwards@Wireless Information Device getsrus.com	business 1
Company switchboard	work	0207 200 2000	all
Company Direct	work	0207 200 2012	business 1
Mobile Phone	work	0840 1234 567	business 1, friends
Home Phone 1	work	0208 341 1234	friends, family
Home Address	work	25 The Gables, Hampstead, London, NW3	family
My photo	photos		friends
Childhood photo	photos		family
Home note	notice	Sorry about dinner ☹	partner
Work note	notice	In a meeting with Tim till 7pm	work 1
My mood now	mood	Very tired	all
Tel Call Subject		"Dinner Tonight"	
Bluetooth	location	Bluetooth pods 1000-1020 ...Sentinel room 2…	
GPS	location	London W1, Seymour St.	partner
Hobby	preferences	Photography, travel	friends
Book	preferences	Maverick	friends
AlbumOfTheWeek	InstaPoll		friends

Randall, Table 1

147. Users are "able to **publish content** that is already stored (and conceivably shared) in their area on the server to specific groups." (Randall, 34:10-12.) To share content, the Symbian client-server infrastructure allows the user to specify, via a web page, one or more groups that are permitted to access the data. (*See* Randall, 24:8-25:19.) Stored user data can be categorized as Public (available to all) or Private. Private data falls into one of three exemplary categories: (1) "[i]nvisible at all times", (2) "[v]isible to specific people (or groups) at all times", and (3) "[v]isibile to specific people (or groups) for a specific period of time." (Randall, 24:13-17.) A Forum (e.g., "Pub on Friday", "Who wants to go clubbing on my birthday", "Naked Chef") is an example of a group which can be specified by a user.

148. As shown in Randall's Table 1 above, each piece of stored data "has an associated tag (or field/attribute) and an associated list of groups ('i-Groups') allowed to access the data." (Randall, 66:9-10.) For example, the name and company data, associated with the "i-Group='all'", "is available to anyone with a web browser." (Randall, 68:1.) Information associated with specific groups are restricted to only members of that group. For example, Alice's childhood photos are only available to Alice's "family" group.

149. Some of the fields "can contain multiple objects and can be thought of as container fields." (Randall, 68:11.) "For example, the 'Photos' field might contain

all of Alice's many hundreds of personal photographs." (Randall, 68:11-13.) The server "presents a table to Alice, showing thumbnails of all of the photographs and enabling Alice to allocate viewing rights to particular groups or individuals." (Randall, 68:13-14.)

150. When a user associates stored content with a group (e.g, Forum), the user identifies the Forum into which the content "*is to be inserted.*" As Randall explains, after a group or individual is designated as having access rights, the information can be provided when the individual or a member of the group "contacts the server" or the information "will be pushed to" member's devices "if technology allows." (Randall, 68:28-30.) Forsyth similarly discloses use of access rights associated with stored data to identify a group. In the "Discussion of Photos" Scenario, after uploading the photos to a remote storage area, the user "creates a Forum message based on the photographs and sends it to a group (as discussed above)." (Forsyth, 7:34-35.) The group members "receive (or are given access to) an object which incorporates or references the photographs." (Forsyth, 7:37-38.)

* * *

151. Thus, the combination of Randall and Forsyth discloses "*identify[ing] a previously established application-based information channel into which the captured content is to be inserted, the identified application-based information*

channel permitting interaction between a user of the mobile device and one or more additional users" [1B]/[18D].

(3) "Determining" Limitations [1C]/[18E]

[1C] determining information associated with at least one wireless networking functionality of the mobile device [18E] determine information associated with at least one wireless networking functionality of the mobile device;

152. As I discussed in §III.D.2, the term "*wireless networking functionality of the mobile device*" was proposed for construction in the Meta-MDT-IPR. I provide the proposed constructions again below. The combination of Randall and Forsyth discloses limitations [1C] and [18E] under both proposed constructions as well as under both constructions of "*wireless network*."

Meta-MDT-IPR	
PO	"functionality implementable by a mobile device via a wireless network independent of the Internet"
Meta	"functionality implementable over a wireless network"

153. The '039 patent refers to "messaging, distributed collaboration, and location-based services" as examples of "wireless networking functionality." (EX-1001, 1:41-43, 1:59-61 ("integration of messaging, collaboration, location-based services or other wireless networking functionality with the generation of shared information content.").) The '039 patent also mentions that the "services integration

suite 38 includes an MMS center 70, an SMS center 71, email systems 72, billing systems 73, voice systems 74, and other systems 75, each of which may be viewed as **representative of a particular type of wireless networking functionality** accessible to the mobile devices 15 via the wireless network 12." (EX-1001, 9:37-42.) That is, according to the '039 patent, messaging (MMS, SMS, email), voice calling, and billing are examples of wireless networking functionality.

154. Forums uses a client/server model with a program component running on a wireless information device (e.g., a local application or microbrowser) which communicates over the wireless network to a program component on the server, as illustrated in Forsyth's Figure 4 (reproduced below). As I discussed in §IV.A.1 Randall and Forsyth teach that the wireless network may be a GSM network (as shown in Figure 4) with the communication protocol means being either GSM-SMS or WAP. (*See, e.g.,* Randall, 1:11-13 (wireless devices "communicate in any manner over any kind of network, such as GSM or UMTS, CDMA and WCDMA mobile radio, Bluetooth, [802.11,] IrDA [(infared)] etc."); Forsyth, 1:22-24 (same).) As shown in Figure 4 below, in the wireless infrastructure supporting Forums mobile devices access the servers via the wireless network and non-mobile (fixed) computing devices (shown as traditional desktop computers) access the servers via the Internet. Thus, in the combination of Randall and Forsyth, the wireless network is depicted as separate and independent from the Internet. Thus, in the Randall-

Forsyth combination, the wireless network allows a device to communicate wirelessly (as required by Meta's "wireless network" construction) and is separate and independent from the Internet (as required under PO's "wireless network" construction).

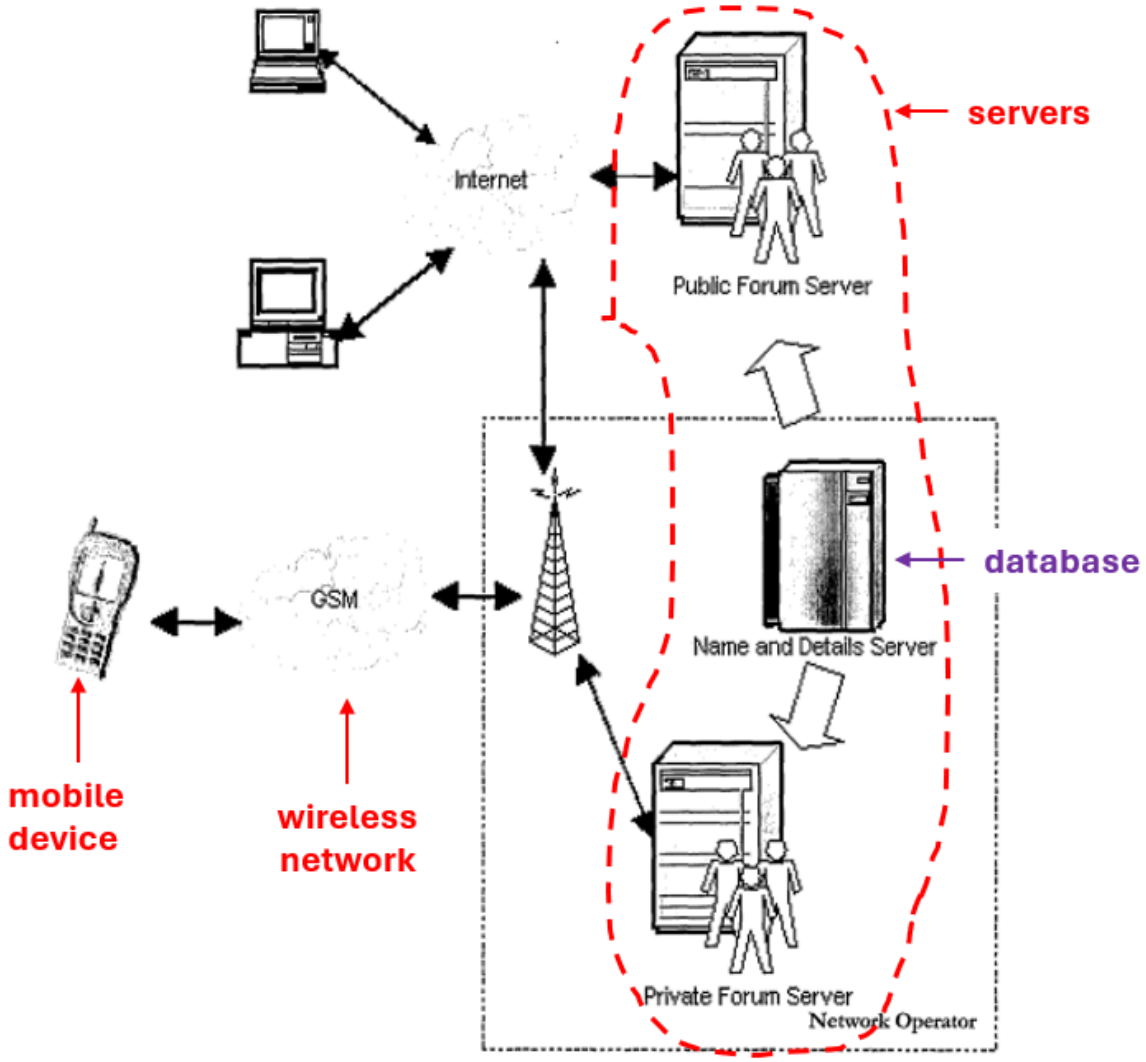

Symbian Forums—Randall, Figure 4

155. The combination of Randall and Forsyth discloses "*determining information associated*" with a functionality implementable over a wireless network

by a mobile device (e.g., via WAP or via GSM-SMS). The '039 patent includes several dependent claims directed to the "***information*** *associated with said at least one wireless networking functionality of the mobile device.*" Claim 8 specifies the information is a "*messaging action*" and claim 9 specifies the information is a "*collaboration action.*" Because of the overlap in subject matter, I address limitations [1C]/[18E] and claims 8-9 together in this section.

(a) Messaging

156. As I noted above, the '039 patent lists messaging (MMS, SMS, email) as an example of a "*wireless networking functionality*." (EX-1001, 1:41-43, 1:59-61.) Claim 8 (reproduced below) which depends from claim 1 recites the determined information of limitation [1C] is "*at least one messaging action.*"

> [1C] **determining information** associated with at least one wireless networking functionality of the mobile device
>
> [18E] determine information associated with at least one wireless networking functionality of the mobile device;
>
> 8. The method of claim 1 wherein **the information** associated with said at least one **wireless networking functionality** of the mobile device comprises information specifying at least one **messaging action** implementable over said at least one wireless network.

157. Forsyth describes that Forums supports "group based text messaging" and "group based multi-media messaging." (EX-1006, 3:35-58, 5:45-49.) Messaging is a functionality implementable by the mobile device via the wireless

network, which as discussed above is separate from the Internet. The Randall-Forsyth combination therefore describes "*at least one wireless networking functionality of the mobile device*" under both PO's and Meta's Meta-MDT-IPR constructions.

158. The scenarios and examples provided by Randall and Forsyth demonstrate that the mobile device recognizes a "*messaging action*" initiated by the user—e.g., post/send a message to the Forum. For example, in the "group based text messaging" (Scenario 1) of Forsyth, when the "Naked Chef" Forum is created, the user sends an initial message to the message server. (*See* Forsyth, 6:1-9.) Subsequent responses "are of the form that the new **message is sent to the server**." (Forsyth, 6:18-22.) Similarly, "Discussion of Photos" (Scenario 2) describes "creat[ing] a Forum **message** based on the photograph." (Forsyth, 7:35-36.) Other scenarios similarly discuss use of messaging/messages to interact with members within a Forum.

159. These scenarios/examples also demonstrate that the mobile device "*determin[es] information specifying*" the "*messaging action*" (sending a message). Specifically, the mobile device creates a Forums message by determining the sender (i.e., identity of the user in the Forum (e.g., Steve)) and the Forum name (e.g., Naked Chef) and combining that information with the text, image, etc. provided by the user

(e.g., "Yeah mebees but he grinds his spices with his teeth and spits them into the food"). I illustrate an exemplary Forums message in my Figure A below.

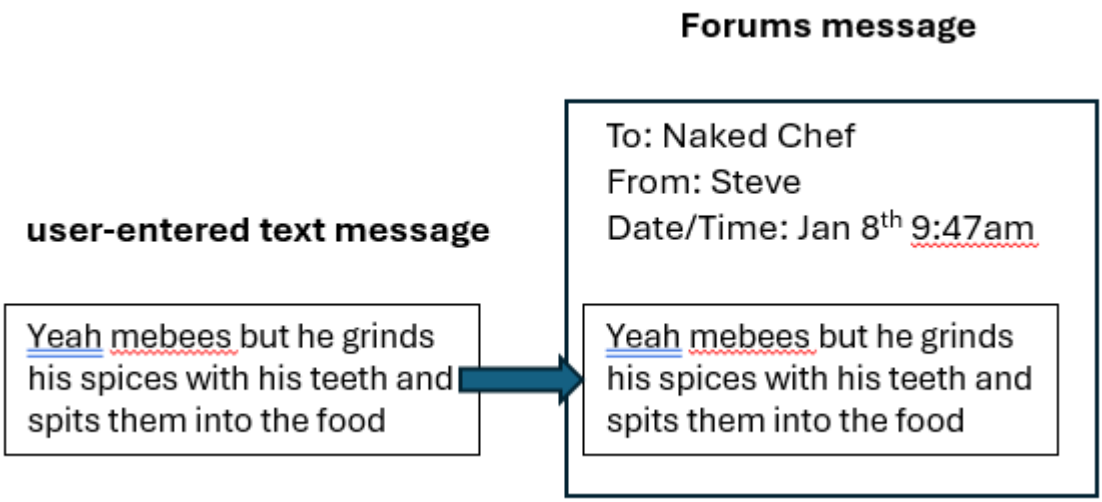

Houh, Figure A

160. The mobile device must also encapsulate the generated Forums message into a protocol message to be transmitted by over wireless network, as I illustrate in my Figure B below. The protocol message includes information associated with the action of sending a message that must be determined by the mobile device. The specific information included in the protocol message is dependent on the protocol used by the communication means (e.g., GSM-SMS or WAP). As I noted in §IV.A.1.c, neither Randall nor Forsyth provides the details of the wireless messaging functionality of GSM-SMS or WAP. These details were specified by standards governing the wireless network and would have been well-

known to and within the general knowledge of a POSITA. I provide a high-level overview of the protocol message used for GSM-SMS and WAP below.

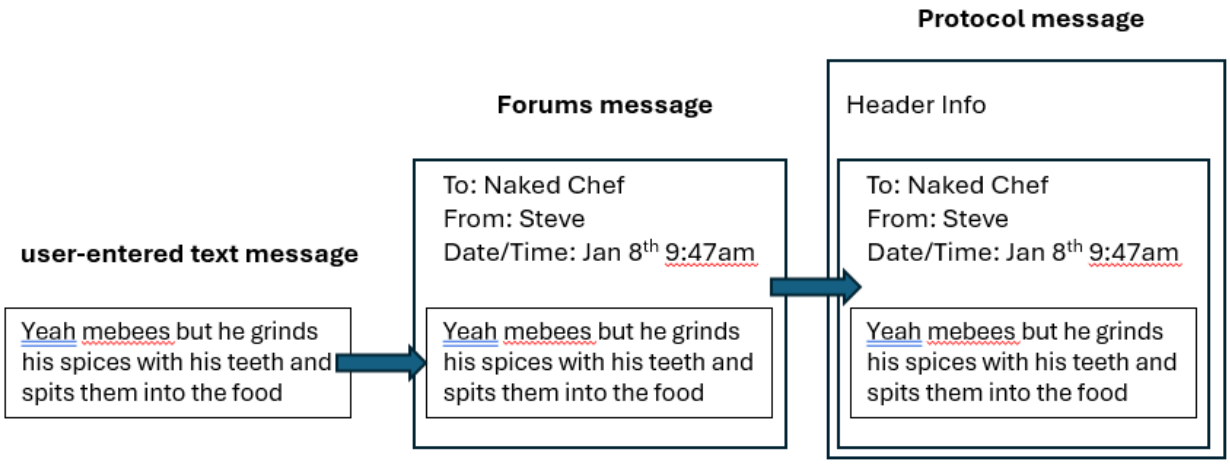

Houh, Figure B

161. The determination of the sender name and Forum name and subsequent inclusion of this information in the sent message is reflected in the Forsyth's Figure 7 which illustrates "messages posted to th[e] Forum." (Forsyth, 6:36-40.) As shown, each message has the user name, date/time and are associated with the group name ("Naked Chef").

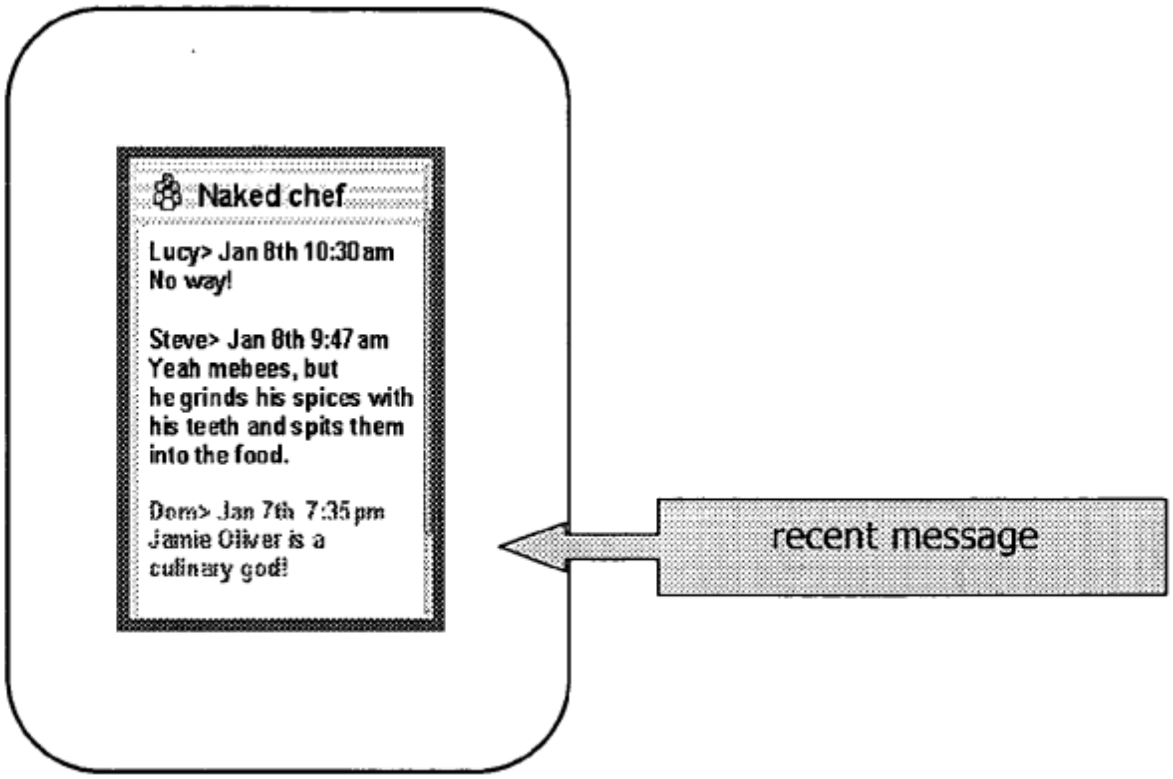

Symbian Forums—Forsyth, Figure 7

(i) GSM-SMS

162. The specification for GSM-SMS is set forth in the "ETSI TS 123 040: Technical realization of short message service (SMS)" ("GSM SMS Standard"; EX-1015.) I refer to version 3.6.0 of this standard released in September 2001 in this section. In SMS messaging, a mobile station can either send messages (referred to as mobile originating) or receive messages (referred to as mobile terminating). As I discussed above, the sending of a message device is a "*messaging action.*"

163. When originating a GSM-SMS message, the mobile station creates a protocol message, referred to as an SMS-Submit protocol data unit ("PDU"),

illustrated below. (EX-1015, 42-43.) At a high level, the SMS-Submit protocol includes header fields including information identifying the type of message (i.e., a SMS-Submit message) and a user data field which may also includes a header along with the Forums message I discussed above. (EX-1015, 60.) The user data field header includes information indicating content type of the short message (e.g., text, animation, small, large picture, etc.). (EX-1015, 63.) These protocol fields are associated with the action of sending a message over the wireless network and are therefore also "*information*" determined by the mobile device.

Abbr.	Reference	p1)	p2)	Description
TP-MTI	TP-Message-Type-Indicator	M	2b	Parameter describing the message type.
TP-RD	TP-Reject-Duplicates	M	b	Parameter indicating whether or not the SC shall accept an SMS-SUBMIT for an SM still held in the SC which has the same TP-MR and the same TP-DA as a previously submitted SM from the same OA
TP-VPF	TP-Validity-Period-Format	M	2b	Parameter indicating whether or not the TP-VP field is present.
TP-RP	TP-Reply-Path	M	b	Parameter indicating the request for Reply Path.
TP-UDHI	TP-User-Data-Header-Indicator	O	b	Parameter indicating that the TP-UD field contains a Header.
TP-SRR	TP-Status-Report-Request	O	b	Parameter indicating if the MS is requesting a status report.
TP-MR	TP-Message-Reference	M	I	Parameter identifying the SMS-SUBMIT.
TP-DA	TP-Destination-Address	M	2-12o	Address of the destination SME.
TP-PID	TP-Protocol-Identifier	M	o	Parameter identifying the above layer protocol, if any.
TP-DCS	TP-Data-Coding-Scheme	M	o	Parameter identifying the coding scheme within the TP-User-Data.
TP-VP	TP-Validity-Period	O	o/7o	Parameter identifying the time from where the message is no longer valid.
TP-UDL	TP-User-Data-Length	M	I	Parameter indicating the length of the TP-User-Data field to follow.
TP-UD	TP-User-Data	O	3)	

GSM SMS Standard, 43

(ii) WAP Messaging

164. As I discussed in §IV.A.1.c.(2), WAP uses GSM-SMS as a bearer (transport). And as specified in the WDP specification, the User Data Header (UDH) for WAP over GSM-SMS is the "User Data Header (UDH) framework as defined in [GSM0340]" which I discussed above. (WDP, 38.) Thus, the messages transmitted via WAP will include the same additional information that I discussed above. I note that the WAP session protocol (WSP) and data protocol (WDP) may include additional header information that would also be determined by a mobile device when generating the WAP message.

* * *

165. The mobile device "*determines information*" associated with wireless messaging that specifies the sending messaging action, the information including information associated with the Forums message (sender identity, date/time, and Forum name) and information associated with the protocol message implemented by the wireless network (e.g., message type, content type). Thus, the combination of Randall and Forsyth discloses "*determin[ing]/[e] information associated with at least one wireless networking functionality of the mobile device*" [1C]/[18E] under both Meta and PO's Meta-MDT-IPR constructions of "*wireless networking functionality of the mobile device*." The combination also discloses "*the information associated with said at least one wireless networking functionality of the mobile*

device comprises information specifying at least one messaging action implementable over said at least one wireless network" [8] under both constructions.

(b) Collaboration

166. As I noted above, the '039 patent lists collaboration as an example of a "*wireless networking functionality*." (EX-1001, 1:41-43, 1:59-61.) Claim 9 which depends from claim 1 recites the determined information of limitation [1C] is "*at least one collaboration action*."

> [1C] **determining information** associated with at least one wireless networking functionality of the mobile device
>
> [18E] determine information associated with at least one wireless networking functionality of the mobile device;
>
> 9. The method of claim 1 wherein **the information** associated with said at least one **wireless networking functionality** of the mobile device comprises information specifying at least one **collaboration action** implementable over said at least one wireless network.

167. Individual Forums are designed to allow members to communicate and collaborate on topics of interest, *e.g.*, by allowing each group member to post or send messages and/or photos, and respond to the messages and/or photos posted or sent by other group members. (Forsyth, 11:32-34 (discussing "Collaborative Activity").) Forsyth recognizes that "groups go and do things." (Forsyth, 11:34-35.) For example, a Forum can be as simple as collaborating to "see[] who is there to play a

game" or individual Forums can be "dedicated to particular games/game areas." (Forsyth, 11:37-39.)

168. Forsyth's "Social Scheduling" Scenario 3 provides a specific example of a "*collaboration action*" where a user in the group poses a question and members of the group collaborate to provide an answer. In this Scenario, a user "creates a new Forum titled 'Anyone fancy a trip to the cinema next week some time?" (Forsyth, 8:44-46.) The user specifies individuals to include in the group. The central server "handles contacting each group member and handles also storing the message thread relating to this subject." (Forsyth, 8:48-52.) The group members discuss (collaborate on) "which night to go on perhaps using some simple control to indicate their preferred days, which is then reflected in a diagram showing the aggregate), which actual cinema to use, and which film to see." (Forsyth, 8:56-60.) The Forum also "has links to trailers, reviews and schedules etc. for each film … which are all used to inform the discussion." (Forsyth, 8:60-64.) The discussion among the group members is via the exchange of messages via a messaging functionality, which is a "*wireless networking functionality.*"

169. The mobile device "*determines information*" associated with wireless messaging that specifies the collaboration actions (messaging among Forum members to solve, e.g., the scheduling details for a cinema visit), the information including information associated with each posted Forum message (sender identity,

date/time, and Forum name) and information associated with the protocol message implemented by the wireless network (e.g., message type, content type) used to send the message. Thus, the combination of Randall and Forsyth discloses "*determin[ing]/[e] information associated with at least one wireless networking functionality of the mobile device*" [1C]/[18E] under both Meta and PO's Meta-MDT-IPR constructions of "*wireless networking functionality of the mobile device.*" The combination also discloses "*the information associated with said at least one wireless networking functionality of the mobile device comprises information specifying at least one collaboration action implementable over said at least one wireless network*" [9] under both constructions.

(4) "Providing" Limitations [1D]/[18F]

[1D] providing the captured content from the mobile device to at least one server for insertion in association with the determined information into the identified application-based information channel [18F] provide, via said at least one network interface, the captured content from the mobile device to at least one server for insertion in association with the determined information into the identified application-based information channel;

170. The combination of Randall and Forsyth discloses "*at least one server,*" as illustrated in the Forums network infrastructure shown in Randall, Figure 4

(reproduced below). The core structures of the architecture are the "internet servers[4] hosting extensible databases." (Randall, 7:16-17, 8:25-26.) Forsyth discloses that in the Forums service the server "handles contacting each group member, storing messages, allowing message to be read, sending, receiving and distributing messages." (Forsyth, 3:28-31, 3:31-33 ("The central server can also act as a store for resources which group-members may wish to discuss and share (e.g. personal information, personal photographs, music, web sites etc).").) Thus, in the combination, the server(s) provide both storage of user provided content and functionality associated with Forums.

[4] Although Randall's Figure 4 illustrates three separate servers, a POSITA would understand that other configurations are possible including a single server hosting the database and server-side aspects of Forums.

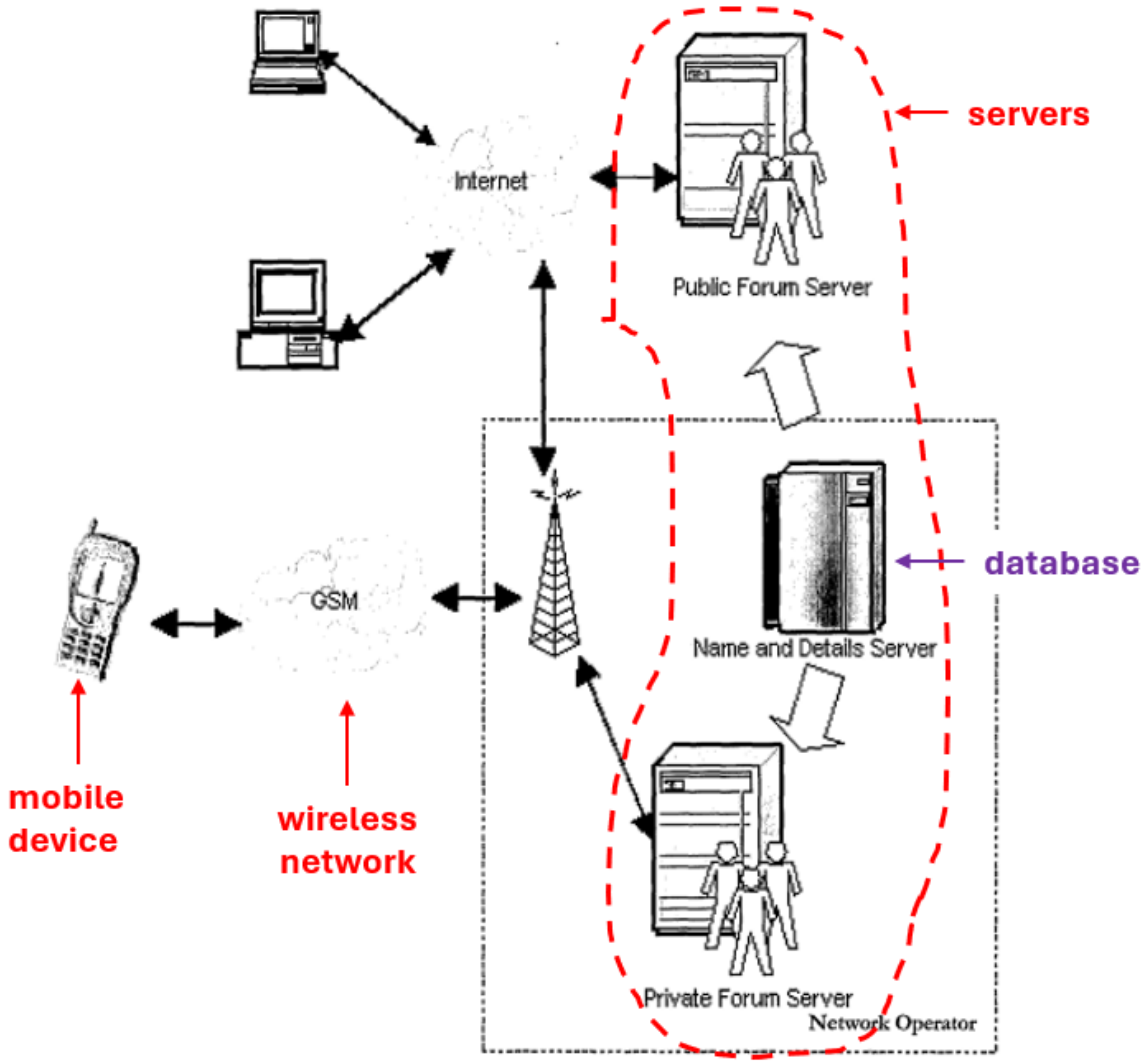

Symbian Forums—Randall, Figure 4

171. In §IV.B.1.b.(1) for limitations [1A] and [18C], I discussed that the combination of Randall and Forsyth discloses "*captur[ing]/[e] content at a mobile device*" including capturing a message, capturing a photo, capturing a music file, and capturing a graphic. I have also noted in the Forsyth background and throughout my analysis that a user of Symbian Forums can capture and post a wide array of other data to a Forum such as weblinks/bookmarks, poll answers, gestures and mood

indications. In §IV.B.1.b.(2) for limitations [1B] and [18D], I discussed that the captured information "*is to be inserted*" into an existing Symbian Forum ("*previously established application-based information channel*").

172. The combination of Randall and Forsyth discloses "*providing the captured content from the mobile device to at least one server*" via the "*network interface*" for insertion into the Forum. First, both Randall and Forsyth describe that content is provided from the wireless information device to the server for storage in the user's profile. When presenting "user requirements for content sharing," Randall explains that "[i]n some cases, such as online photo albums, there is a need to share content that is (at least initially) local to the user's device." (Randall, 32:24-25.) In these cases, "[u]sers must be able to share content local to the device and have **any uploading to the server** handled automatically." (Randall, 32:26-27.) A POSITA would have understood the content was captured by the device, e.g., by an onboard camera. As I described above, Randall describes the database used to store content and user/group information. (*See, e.g.,* Randall, 66:9-14, Table 1.) Forsyth discloses that "[s]toring personal information (contact lists, diaries, photographs etc) on a remote server is one possible model of enabling robust storage combined with easy access to personal information." (Forsyth, 7:21-24.)

173. Second, both Randall and Forsyth disclose the captured content is sent to the server in a message provided to the Forum. Forsyth discloses "a **remote server**

which is designed to handle all aspects of **storing** and forwarding messages to the intended recipients, **maintaining** m[e]ssage threads and making then readable to recipients etc." (Forsyth, 3:21-24.)

174. As I discussed in §IV.B.1.a.(3) the mobile device includes "*at least one network interface*" (e.g., the RF module/transmitter/receiver). Although not explicit, a POSITA would have understood that the "*captured content*" is provided to the server over the wireless network and therefore is provided to the wireless network "*via said at least one network interface*."

175. The combination of Randall and Forsyth discloses that "*the captured content*" is provided "*for insertion in association with the determined information into the identified application-based information channel*." I discuss the disclosures of Randall-Forsyth in the context of the "*captured content*" scenarios discussed in limitations [18A]/[18C].

176. **Captured Message:** In the "group based text messaging" (Scenario 1) of Forsyth, response messages, captured via the Forum application on the mobile device, "are of the form that the new message **is sent to the server**, which then **forwards on** the increment to all the people on the current (server-maintained) address list." (Forsyth, 6:18-20.) That is, the message from the user ("Yeah mebees, but he grinds his spices with his teeth and spits them into the food") is "*insert[ed] … into the identified application-based information channel*" (Naked Chef).

177. As I discussed in §IV.B.b.(c) for limitations [1C] and [18E], "*information associated with*" the action of the Forums message (e.g., sender name, date/time, Forum name) is determined and provided in the protocol message provided to the server. As shown by Forsyth's Figure 7 (reproduced below), this "*determined information*" (user name, date/time, forum name) is inserted "*into the identified application-based information channel*" with the "*captured content*" and displayed on Forum (Naked Chef) screen for each forum member.

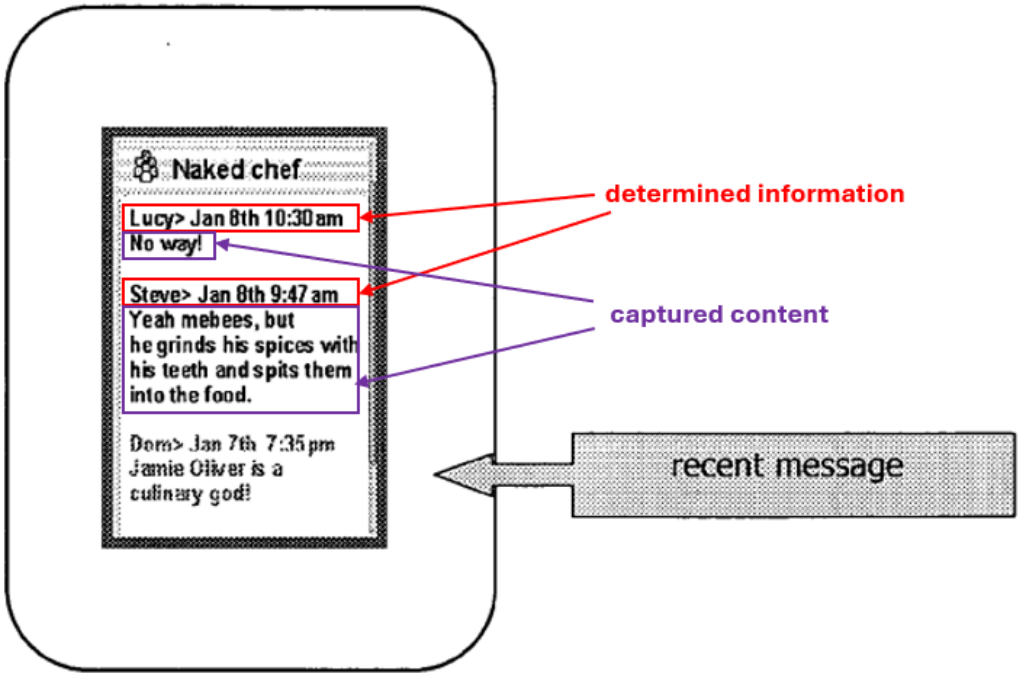

Symbian Forums—Forsyth, Figure 7

178. **Captured Photos:** The "Discussion of Photos" (Scenario 2) of Forsyth illustrates both (1) when a user inserts content previously stored on the server into a Forum and (2) when a user posts a photo in real-time. The user "wants some of his

work colleagues to see these, so he **uploads them to his remote storage area**." (Forsyth, 7:32-33.) "He then **creates a Forum message** based on the photographs and sends it to a group." (Forsyth, 7:34-35.) That is, the user provided the photo to the server and subsequently allowed access to the photo by Forum members. Randall describes a technique for identifying a Forum in this manner, as I discussed in §IV.B.1.b.(1).a. All members of the group (forum) then "receive (or are given access to) an object which incorporates or references the photographs" and "can make comments on the pictures and the group members can again discuss and deride the content." (Forsyth, 7:36-40.) Members of the group can also "post their own photos back." (Forsyth, 7:42-43.) Although Forsyth does not provide Figures associated with this Scenario, a POSITA would understand that "*determined information*" from the messages including the captured photos (Forum name, originator, and/or date/time stamp) is inserted "*into the identified application-based information channel*" with the "*captured content*" (newly posted photo).

179. **Captured Music/Graphics:** The captured music file and captured graphic that I discussed in limitations [1A]/[18C] (*see* §IV.B.1.b.(1).(c)-(d)) are inserted into a Forum in the same manner and for the same reasons as I discussed above, a POSITA would understand that "*determined information*" from the message (Forum name, originator, and/or date/time stamp) including the content or

referencing previously stored captured content is inserted "*into the identified application-based information channel*" with the "*captured content.*"

(5) "Receiving" Limitations [1E]/[18G]

[1E] receiving other content, at the mobile device via the identified application-based information channel, from at least one of the additional users. [18G] receive other content, via the identified application-based information channel, from at least one of the additional users

180. Symbian Forums, described by Randall and Forsyth, is designed for interactive communication/discussion within a Forum. Specifically, Forums is a "group communication method for a wireless information device that enables communications to be **sent and received between several wireless information devices operated by end-use[r]s that form a group of end users**" (i.e., a Forum). (Forsyth, 1:64-2:1.) Each of the Scenarios presented by Forsyth illustrates that a mobile device receives content (messages, photos, graphics, music files, etc.) associated with a Forum ("*application-based information channel*") from other Forum members, i.e., from "*at least one of the additional users*" of the Forum.

181. For example, in "group based text messaging" (Scenario 1) of Forsyth, illustrated in Figure 7 (below-right), responses to the original message "are of the form that the new message is sent to the server, which then forwards on the increment [new reply] to all the people on the current (server-maintained) address list." (Forsyth, 6:18-22.) In this scenario, "[i]f a user clicks on 'Forum reply'", in the

screen shown in Figure 9 (below-left), "then a new message is posted to the Forum." (Forsyth, 6:54-55.) As highlighted in Forsyth's Figure 7 below, the new content is received at the mobile device and displayed via the Forums application in the Forum associated with the content. The replies posted to the Forum are "*other content*" received "*at the mobile device via the identified application-based information channel*" (Forum) "*from at least one of the additional users*

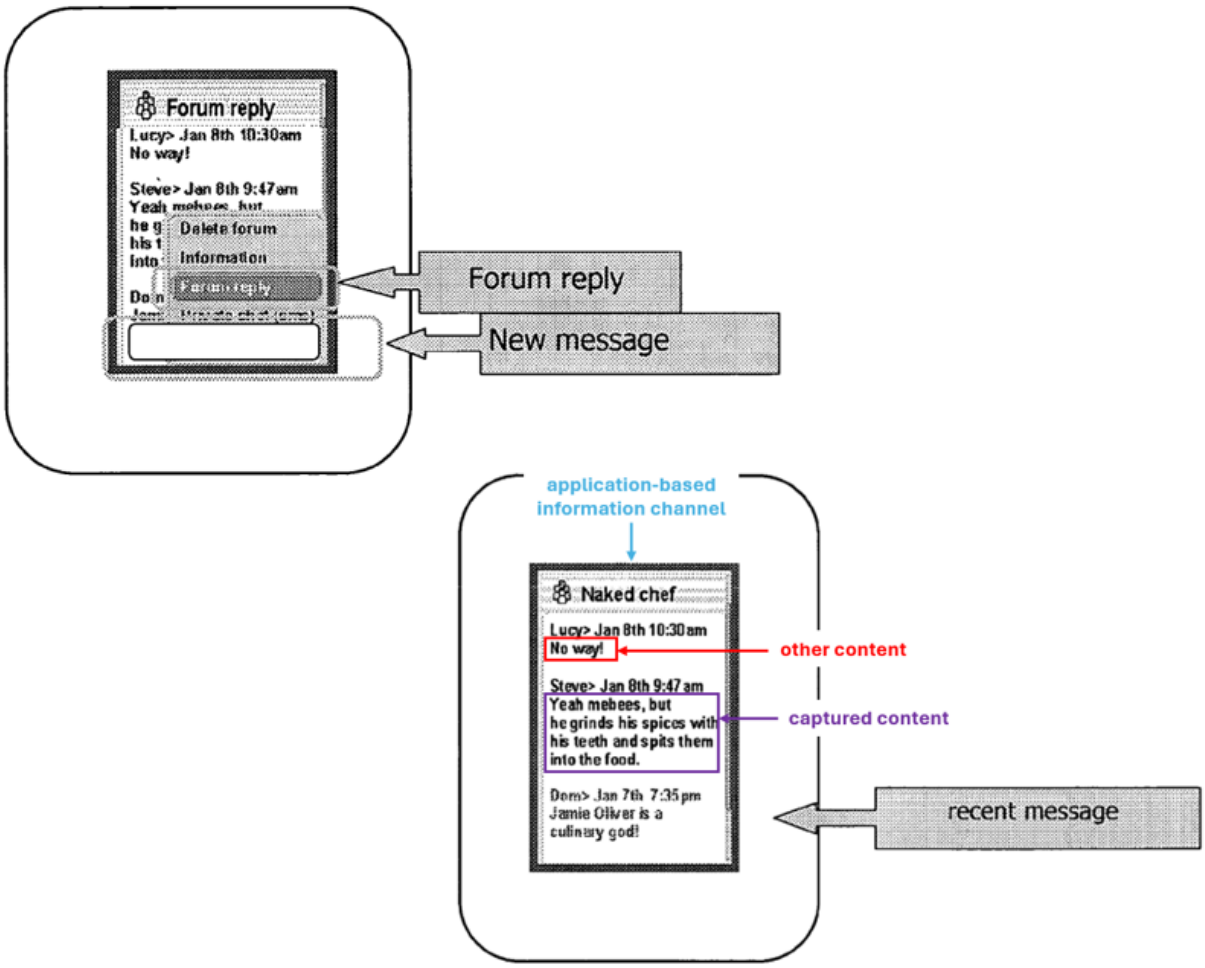

Symbian Forums—Forsyth, Figure 9 (left), Figure 7(right)

182. In the "Discussion of Photos" (Scenario 2) of Forsyth, "[a]ll group members receive (or are given access to) an object which incorporates or references" photographs. (Forsyth, 7:37-38.) The group members "can make comments on the pictures and the group members can again discuss and deride the content." (Forsyth, 7:39-40.) "Some people post their own photos back." (Forsyth, 7:42-43.) The photos and comments posted by the other group members are "*other content.*"

183. In the "Digital Memento from a User's Birthday" (Scenario 4) of Forsyth, a user "create[s] a Forum called 'Who wants to go clubbing on my birthday (the 29th)?'" (Forsyth, 9:14-17.) The user "invites all his group 'Friends' to the Forum." (Forsyth, 9:18-20.) Group members "post MP3s of the kind of music played at each club, and links to the club's pages" to the Forum. (Forsyth, 9:21-22.) Group members also "post[] their photos" and "someone posts the bar bill." (Forsyth, 9:29-30.) The content is "held at the central server and made available" to all group members "to download or receive as streaming media." (Forsyth, 9:22-24.) The music files, photos, documents posted to the forum by the other members are "*other content.*"

184. In the "Radio Forums" example, "users submit tracks to a communally-built-up playlist" which is achieved "by creating a link between the user's store of digital music and the playlist stack." (Forsyth, 11:44-47.) "The tracks are then played in turn and streamed from the server to the devices of everyone within the group."

(Forsyth, 11:47-49.) Users can "exchange text or voice comments", "vote on tracks", or "apply a simple rating of a track" which are each "*other content.*" (Forsyth, 11:49-52.)

185. These are just a few examples that showing the combination of Randall and Forsyth discloses "*receiving other content, at the mobile device via the identified application-based information channel, from at least one of the additional users*" [1E] and "*receive other content, via the identified application-based information channel, from at least one of the additional users*" [18G]. Other examples discussed herein and within Randall and Forsyth are equally applicable.

2. Server-Side Independent Claims 19 and 23

186. Server-side method claim (19) and device claim (23) include substantially overlapping processing limitations, as illustrated in the table below. Because of the overlap, I address these limitations together. In this table, I provide a citation to the section discussing each limitation

Claim 19	Claim 23	Section
[19P] A method comprising:		IV.B.2.a
	[23P] A server comprising:	IV.B.2.b
	[23A] at least one processing element comprising a processor coupled to a memory; and	IV.B.2.c
	[23B] at least one network interface;	IV.B.2.c

Claim 19	Claim 23	Section
	said at least one processing element being configured to:	IV.B.2.d
[19A] receiving, at a server from a mobile device, content for insertion into a previously established application-based information channel, the previously established application-based information channel permitting interaction between a user of the mobile device and one or more additional users;	[23C] receive, from a mobile device, content for insertion into a previously established application-based information channel, the previously established application-based information channel permitting interaction between a user of the mobile device and one or more additional users;	IV.B.2.d.(1)
[19B] receiving, at the server from the mobile device, information associated with at least one wireless networking functionality of the mobile device;	[23D] receive, from the mobile device, information associated with at least one wireless networking functionality of the mobile device;	IV.B.2.d.(2)
[19C] integrating the content and the information associated with said at least one wireless networking functionality of the mobile device into the previously established application-based information channel; and	[23E] integrate the content and the information associated with said at least one wireless networking functionality of the mobile device into the previously established application-based information channel; and	IV.B.2.d.(3)
[19D] inserting other content from at least one of the additional users into the previously established application-based information channel.	[23F] insert other content from at least one of the additional users into the previously established application-based information channel.	IV.B.2.d.(4)

a) Preamble [19P]: "method"

[1P] A method comprising:

187. The combination of Randall and Forsyth discloses a method for performing the actions recited in limitation [19A]-[19D] discussed in §§IV.B.2.d.(1)-(4).

b) Preamble [23P]: "server"

[23P] A server comprising:

188. The combination of Randall and Forsyth discloses a "*server*" [23P]. As I discussed in §IV.B.1.b.(4) for limitations [1D]/[18E], Forsyth discloses use of a "central server which handles contacting each group member, storing messages, allowing message[s] to be read, sending, receiving and distributing messages." (Forsyth, 3:28-31; *see also* Forsyth, 3:31-33.) The client-server infrastructure of Symbian Forums over a GSM network is illustrated in Randall's Figure 4 (reproduced below). Although Randall shows three servers, a POSITA would have understood that a single server could be used to host the database and the private and public forums.

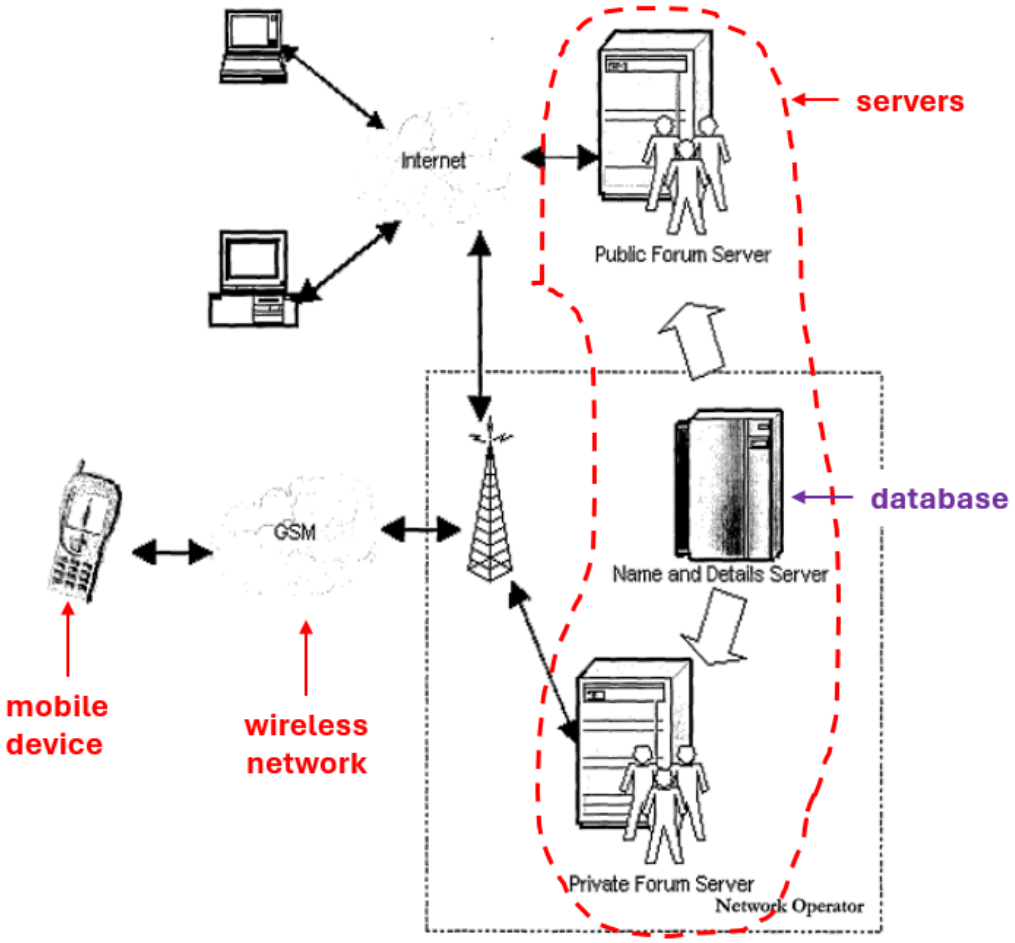

Symbian Forums—Randall, Figure 4

c) Server Architecture Limitations [23A]-[23B]

[23A] at least one processing element comprising a processor coupled to a memory; and [23B] at least one network interface;

189. "Server" claim 23 further includes limitations [23A] and [23B] which recite the high-level architecture of a "s*erver.*" I note that claim 19 does not include these limitations. Neither Randall nor Forsyth explicitly disclose the architecture of the server. However, it would have been obvious to a POSITA that a "*server*"

includes "*a processing element comprising a processor coupled to a memory*" and a "*network interface*" based on the teachings of Randall and Forsyth in light of the general knowledge of a POSITA.

190. As I noted in my analysis of limitations [18A]-[18B], the '039 patent's high-level "implementation" of an information processing element, shown in Figure 1B, is applicable to servers. Both Randall and Forsyth suggest to a POSITA that the server includes these components.

191. Both Randall and Forsyth describe that the server performs processing actions and therefore has a "*processing element*." For example, Forsyth explains the server "handles **contacting each group member**, storing messages, **allowing message to be read, sending, receiving and distributing messages**." (Forsyth, 3:28-31.) And Randall specifically mentions "server side software" (Randall, 57:4) and "server side message handling **applications**" (Randall, 38:24). A POSITA would have understood that software and applications execute on "*a processor*" within the "*processing element.*" The server acts as "a store for resources which group-members may wish to discuss and share (e.g., personal information, personal photographs, music, web sites, etc)." (Forsyth, 3:31-34.) The storage at the server is "*memory.*" (*See, e.g.,* EX-1001, 4:60-63 (memory includes "any other type of storage device").

192. Should PO contend "*memory*" of the "*processing element*" must store instructions executed by the processor, such memory would have been obvious, if not inherent in Randall and Forsyth which both teach software running on the server. Because the software/applications executing on a processor are stored in memory and also access information stored locally in memory, a POSITA would have understood Randall and Forsyth further disclose or suggest the "*processor* [is] *coupled to a memory.*"

193. Randall and Forsyth each discloses or at least suggests to a POSITA the server includes "*at least one network interface*." Both Randall and Forsyth disclose the wireless devices "communicate" with the server "in any manner over any kind of network, such as GSM or UMTS, CDMA and WCDMA mobile radio, Bluetooth, [802.11,] IrDA [(infared)] etc." (Randall, 1:11-13; Forsyth, 1:22-25 (same).) To access these wireless networks, the server requires an interface to the network—a "*network interface.*" Indeed, Randall specifically refers to the "GSM/GPRS interface" and illustrates servers coupled to a GSM network. (Randall, 40:1-2; *see also* Randall, Figure 4.)

194. Moreover, it would have been within the general knowledge of a POSITA that a server includes "*a processor coupled to a memory*" and "*a network interface.*" As I discussed in §III.B a POSITA has a "bachelor's degree in electrical engineering, computer science, or similar field, with two years of experience in

developing and implementing network-based computer systems that interact with mobile devices, such as systems for storing and retrieving information over the Internet or communicating using the Web using wireless mobile devices." The high-level design of a processing element shown in the '039 patent would have been well-known to such an individual. I provide a sampling of examples below.

195. **U.S. Patent 7,802,207 to Agboatwalla et al. ("Agboatwalla"; EX-1024):** Agboatwalla discloses a "typical hardware configuration" of a workstation. (Agboatwalla, 5:40-42.) The configuration includes CPU 110, RAM 114, ROM 116 and "communication adapter 134 for connecting the workstation to a communication network." (Agboatwalla, 5:45-55.)

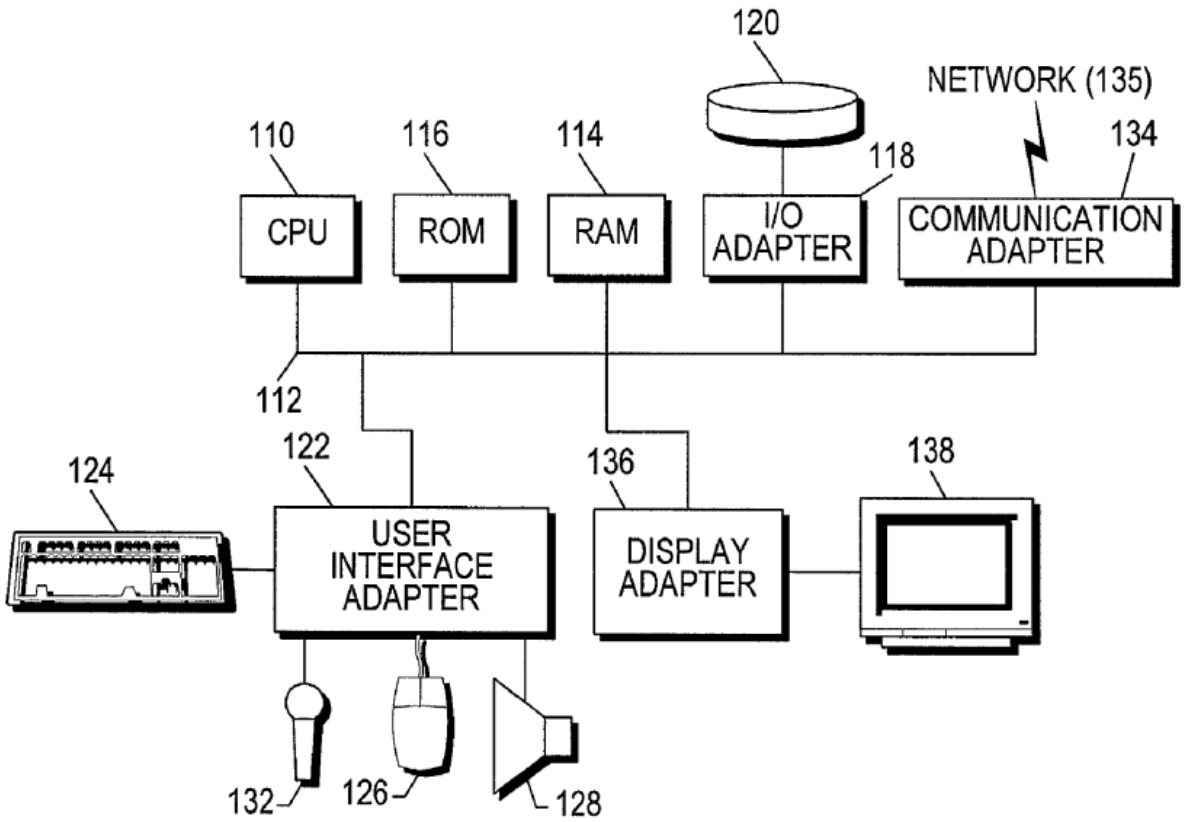

Agboatwalla, Figure 1

196. **U.S. Patent 7,574,486 to Cheng et al. ("Cheng"; EX-1025):** Cheng discloses "a block diagram of the internal hardware of [a] computer system", illustrated in Figure 12 (below). (Cheng, 23:26-27.) The computer system includes a CPU 1204, ROM 1206, RAM 1208, and a communications port 1216 for communications with a transport medium such as wireless communication network. (Cheng, 23:29-51.)

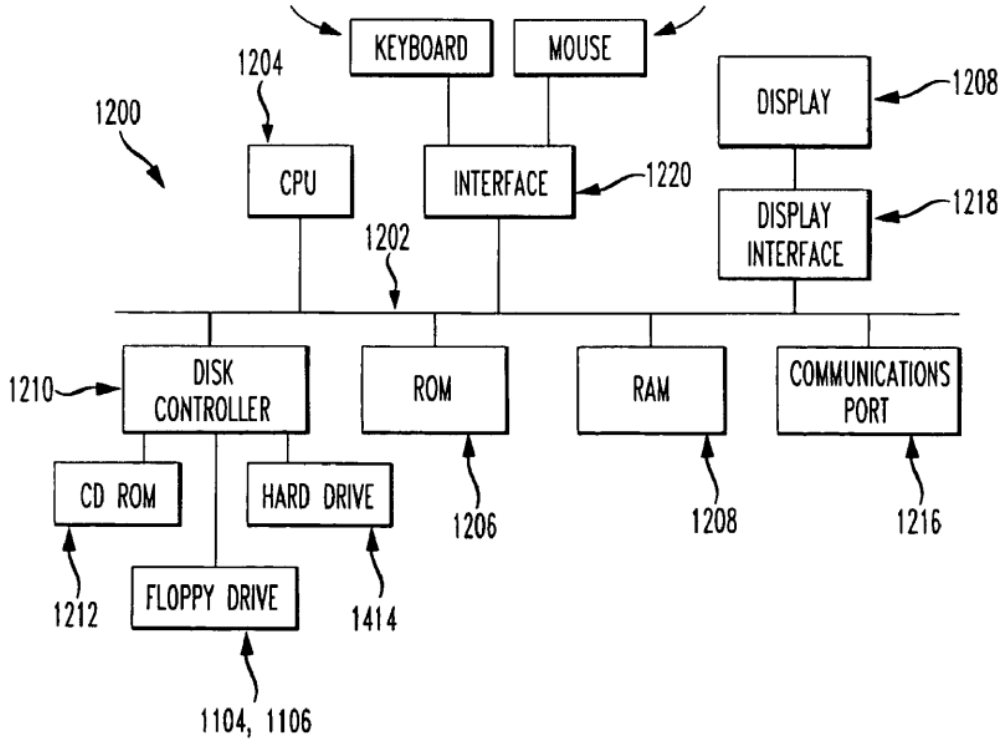

Cheng, Figure 12

197. **U.S. Patent 6,788,949 to Bansal ("Bansal"):** Bansal explains that "a typical information device" which can "symbolize" a server, illustrated in Figure 5 (below), includes "**well-known** components such as one or more network interfaces 5100, one or more processors 5200, one or more memories 5300 containing instructions 5400, and/or one or more input/output ("I/O") devices 5350." (Bansal, 6:66-7:5.)

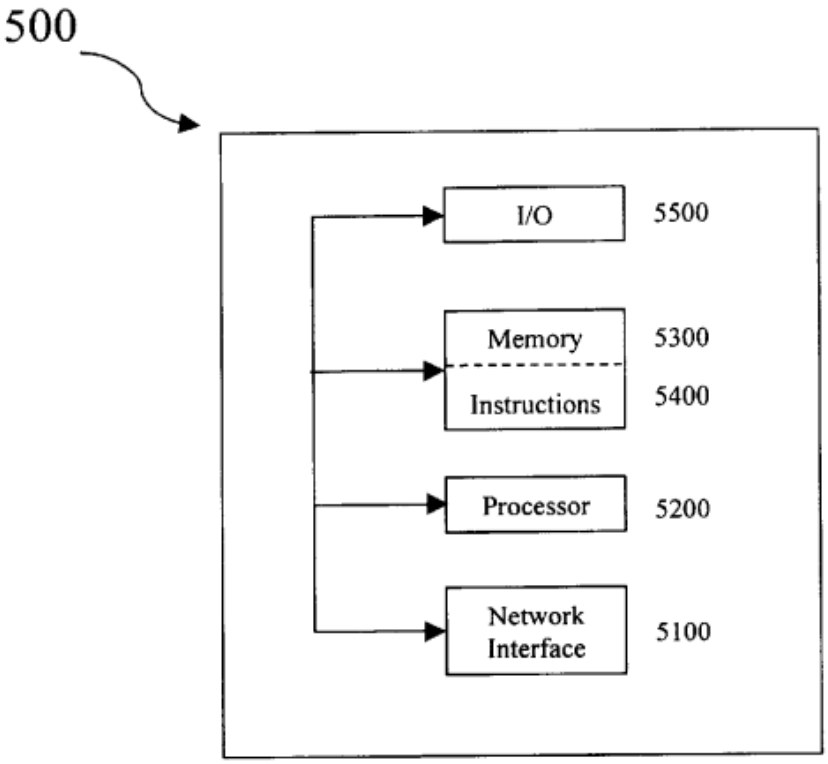

Bansal, Figure 5

198. Additionally, Pelkey and Eck which I discuss in Ground 2 discloses a server having a CPU, memory, and network interface. (*See, e.g.,* Eck, 3:46-47; Pelkey, 5:7-14.)

d) Processing Limitations [19A]-[19D]/[23C]-[23F]

(1) "Receiv[ing]/[e]" Content Limitations [19A]/[23C]

[19A] receiving, at a server from a mobile device, content for insertion into a previously established application-based information channel, the previously established application-based information channel permitting interaction between a user of the mobile device and one or more additional users; [23C] receive, from a mobile device, content for insertion into a previously established application-based information channel, the previously established application-based information channel permitting interaction between a user of the mobile device and one or more additional users;

199. As I discussed in §IV.B.1.b.(2) for limitations [1B] and [18D], the combination of Randall and Forsyth discloses a "*previously established application-based information channel permitting interaction between a user of the mobile device and one or more additional users*."

200. As I discussed in §IV.B.1.b.(4) for limitations [1D] and [18E], the combination of Randall and Forsyth discloses "***providing the captured content from the mobile device to at least one server for insertion*** *in association with the determined information* ***into the identified application-based information channel***." That is, content for insertion into identified application-based information

channel is transmitted from the mobile device to the server. The corollary is also true— "*content for insertion into a previously established application-based information channel*" is received "*at a server from a mobile device"* [19A]/[23C].

201. Thus, the combination of Randall and Forsyth discloses limitations [19A] and [23C].

(2) "Receiv[ing]/[e]" Information Limitations [19B]/[23D]

[19B] receiving, at the server from the mobile device, information associated with at least one wireless networking functionality of the mobile device;
[23D] receive, from the mobile device, information associated with at least one wireless networking functionality of the mobile device;

202. As I discussed in §IV.B.1.b.(3) for limitations [1C] and [18E], the combination of Randall and Forsyth discloses "*determining information associated with at least one wireless networking functionality of the mobile device.*" And, as I discussed in §IV.B.1.b.(4)(for limitations [1D] and [18E], the combination of Randall and Forsyth discloses "***providing*** *the captured content* ***from the mobile device to at least one server*** *for insertion in association with* ***the determined information*** *into the identified application-based information channel.*" That is, the information associated with a wireless networking functionality is transmitted from the mobile device to the server. The corollary is also true for this limitation—the "*information associated with at least one wireless networking functionality of the mobile device*" is received "*at the server from the mobile device*" [19B]/[23D].

203. Thus, the combination of Randall and Forsyth discloses limitations [19B] and [23D].

(3) "Integrat[ing]/[e]" Limitations [19C]/[23E]

[19C] integrating the content and the information associated with said at least one wireless networking functionality of the mobile device into the previously established application-based information channel; and
[23E] integrate the content and the information associated with said at least one wireless networking functionality of the mobile device into the previously established application-based information channel; and

204. As I discussed in §IV.B.1.b.(4) for limitations [1D] and [18E], the combination of Randall and Forsyth discloses "*providing the captured content from the mobile device to at least one server for insertion in association with the determined information into the identified application-based information channel.*" That is, the content and the information associated with a wireless networking functionality are provided to the server so that they can be inserted into "*application-based information channel.*"

205. Forsyth discloses that when a Forum is created using a group object to define the recipient, the original message posted to the Forum is "treated as a single 'communication object.'" (Forsyth, 4:19-20.) "All linked (e.g. threaded) communications, such as replies and comments, then become part of the same communication object and, like any object are treated as a discrete entity." (Forsyth,

4:20-24.) "Hence, the entire communication object can be sent to a new person, or be archived etc." (Forsyth, 4:25-26; *see* Forsyth, 7:6-8 ("The contents of a Forum can be forwarded-on, for example, to contacts who are not participating in the Forum, or to the Jotter application.").)

206. Forsyth describes an exemplary use of "communication objects" in the "group based text messaging" Scenario (Scenario 1). In this Scenario, a communication object includes the initial message. When new messages are sent to the server, the server "forwards the increment to all the people on the current (server-maintained) address list. (Forsyth, 6:1-22.) Within the Forum (e.g., Naked Chef), "the user is shown the messages posted to that Forum", as shown in Forsyth's Figure 7 below. (Forsyth, 6:38-40.) "Messages appear in date order, i.e. newest messages appear at the bottom." (Forsyth, 6:40-42.) As shown in Figure 7, the captured content (message; "No way!") and at least a portion of the determined information (poster name (e.g., Lucy and Jan 8th 10:30 am) is integrated "*into the previously established application-based information channel*."

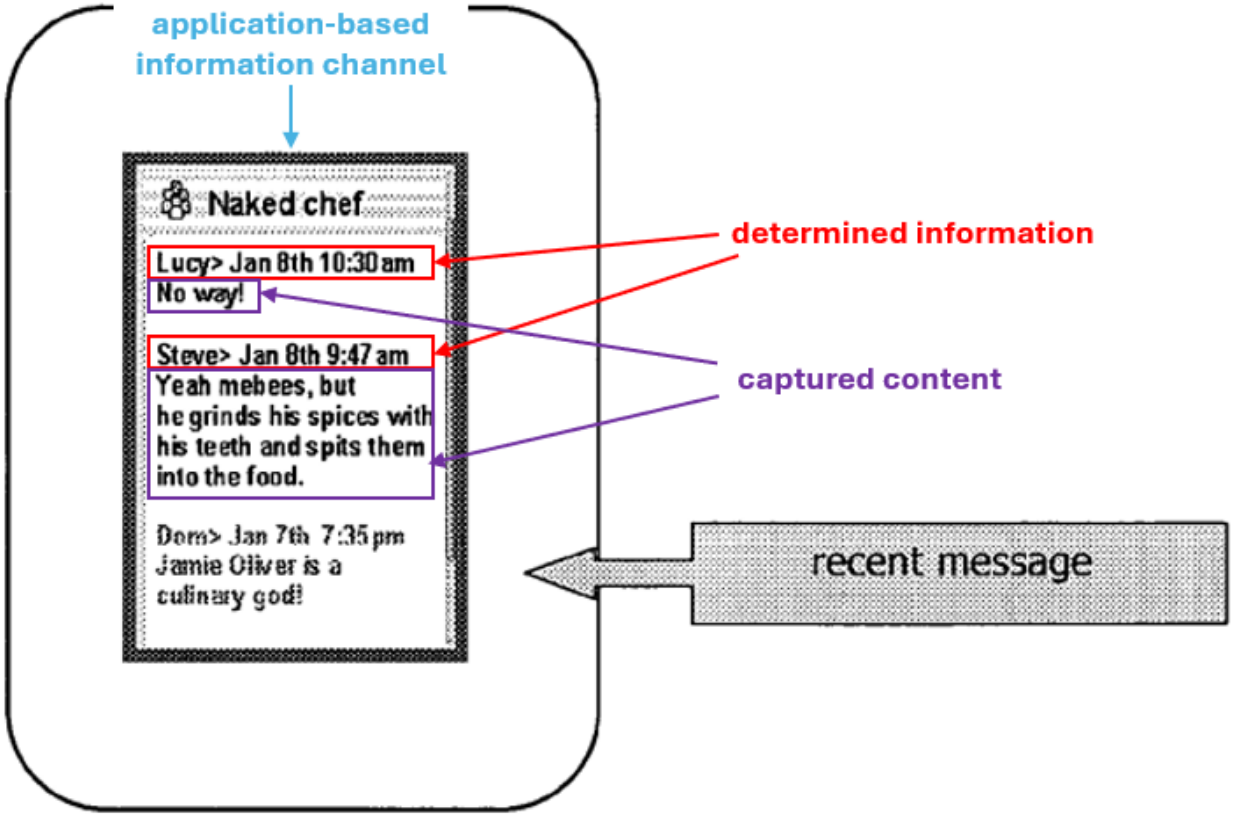

Symbian Forums—Forsyth, Figure 7

(4) "Insert[ing] Other Content" [19D]/[23F]

[19D] inserting other content from at least one of the additional users into the previously established application-based information channel; [23F] insert other content from at least one of the additional users into the previously established application-based information channel.

207. As I discussed in §IV.B.1.b.(5) for limitations [1E] and [18G], the combination of Randall and Forsyth discloses that "*other content*" is received "*at the mobile device via the identified application-based information channel, from at least one of the additional users*." For the same reasons, the combination of Randall

and Forsyth discloses "*insert[ing] other content from at least one of the additional users into the previously established application-based information channel*" [19D]/[23F].

3. Claim 17: Client-Side "Computer-Readable Storage Medium"

17. A non-transitory computer-readable storage medium having embodied therein executable code of one or more software programs, wherein said executable program code when executed by a processing element of the mobile device causes the mobile device to perform the method of claim 1.

208. As I discussed in §IV.B.1.a.(3), both Randall and Forsyth disclose the client-side program component of Forums that executes on the wireless device. (Forsyth, 2:47-48 ("Forums runs on the object based operating system Symbian OS."); Randall, 5:22-24 ("user can then download the enhancements to applications resident on its device, or entirely new applications …").) Randall also refers to "[s]oftware for a wireless information device" which "run[s] on the device." (Randall, claim 53.) Forsyth similarly refers to a "wireless information device programmed with computer software." (Forsyth, claim 19.) Although not explicit, a POSITA would have understood from these disclosures that the client-side Forums program is "*executable code of one or more software programs*" which "*when executed by a processing element of the mobile device causes the mobile device to perform the*" actions specified in claim 1.

209. Neither Randall nor Forsyth explicitly states that the client-side program is stored of a "*non-transitory computer-readable storage medium*." Memory or another similar computer readable medium storing the software to be executed on the processor would necessarily be included in the mobile device. The 1994 textbook on Operating System Concepts by Silberschatz ("Silberschatz"; EX-1026) confirms this understanding. Silberschatz explains that a "computer system consists of a CPU and a number of device controllers that are connected through a common bus that provides access to shared memory." (Silberschatz, 29-30.) Silberschatz stresses that for a computer "to do its job of executing programs," the programs must be stored in memory. (Silberschatz, 37.)

210. To the extent this is not deemed to be inherent in a computing device running software, it would have been obvious to a POSITA and well within the POSITA's general knowledge. I provide several examples of mobile devices having a "*computer-readable storage medium*" below.

211. **U.S. Patent 6,947,396 to Salmi ("Salmi"):** Salmi teaches that the "software of the wireless terminal MS … is typically stored in the non-volatile memory." (Salmi, 15:1-4.) The processor "controls on the basis of the software the operation of the wireless terminal MS, such as the use of the radio part RF; the presentation of messages by the user interface UI; and the reading of inputs received from the user interface UI." (Salmi, 15:4-8.) "The software that can be implemented

in many different ways preferably comprises program blocks that are responsible for the implementation of different procedures." (Salmi, 15:8-11.)

212. **U.S. Patent 7,092,495 to Kraft, et al. ("Kraft"):** Kraft discloses the its processor "supports the GSM terminal software." (Kraft, 4:6-7.) And Kraft recites in its claims a "program stored in a storage medium for use in a communication terminal including a user interface … which when executed by the controller causes the communication terminal to perform" the specified method. (Kraft, 17:32-40.)

213. **U.S. Patent 6,788,949 to Bansal ("Bansal"):** Bansal teaches that its memory "can be coupled to a processor 5200 and can store instructions 5400 adapted to be executed by processor 5200." (Bansal, 7:23-26, 7:3-4 ("one or more memories 5300 contain[s] instructions"), Figure 5.) These instructions "can be embodied in software, which can take any of numerous forms that are well known in the art." (Bansal, 7:32-34.)

214. Additionally, as discussed in §V.B.3, Pelkey and Eck which I discuss in Ground 2 discloses a computer readable storage medium at a mobile device.

4. Claim 22: Server "Computer-Readable Storage Medium"

> 22. A non-transitory computer-readable storage medium having embodied therein executable code of one or more software programs, wherein said executable program code when executed by a processing element of the server causes the server to perform the method of claim 19.

215. As I discussed in § IV.B.2.c, both Randall and Forsyth disclose that the server performs processing and therefore has a server-side program component of Forums. For example, Forsyth explains the server "handles **contacting each group member**, storing messages, **allowing message to be read, sending, receiving and distributing messages**." (Forsyth, 3:28-31.) And Randall specifically mentions "server side software" (Randall, 57:4) and "server side message handling **applications**" (Randall, 38:24). Although not explicit, a POSITA would have understood from these disclosures that the server-side Forums program is "*executable code of one or more software programs*" which "*when executed by a processing element of the mobile device causes the mobile device to perform the*" actions specified in claim 19.

216. Neither Randall nor Forsyth explicitly states that the client-side program is stored of a "*non-transitory computer-readable storage medium*." Memory or another similar computer readable medium storing the software to be executed on the processor would necessarily be included in the mobile device, as I discussed above for the mobile device. (*See* Silberschatz, 29-30, 37.)

217. To the extent this is not deemed to be inherent in a computing device running software, it would have been obvious to a POSITA and well within the POSITA's general knowledge. I provide several examples of servers having a "*computer-readable storage medium*" below.

218. **U.S. Patent 7,802,207 to Agboatwalla et al. ("Agboatwalla"):** Agboatwalla describes a "computer program product" used to perform the function of "generating a customizable network user interface." (Agboatwalla, 3:7-9.) Its "computer program product" is "embodied on a computer readable medium" and comprises "computer code." (*See* Agboatwalla, 42:1-38.)

219. **U.S. Patent 7,574,486 to Cheng et al. ("Cheng"):** Cheng describes a "method, and computer readable medium [at a proxy server] for reformatting web content into a format readable on one or more mobile device." (Cheng, Abstract.) Cheng explicitly discloses "sets of instructions resident" in RAM that "[u]ntil required by the computer system, the set of instructions may be stored in another computer readable memory." (Cheng, 23:63-24:1.)

220. **U.S. Patent 6,788,949 to Bansal ("Bansal"):** Bansal teaches the memory in a server "can be coupled to a processor 5200 and can store instructions 5400 adapted to be executed by processor 5200." (Bansal, 7:23-26, 7:3-4 ("one or more memories 5300 contain[s] instructions"), Figure 5.) These instructions "can be

embodied in software, which can take any of numerous forms that are well known in the art." (Bansal, 7:32-34.)

221. Additionally, as discussed in §V.B.4, Pelkey and Eck which I discuss in Ground 2 discloses a computer readable storage medium in a computer which can be used as a server.

C. Claims 2 and 29 – "personalized content application"

> 2. The method of claim 1 wherein the identified application-based information channel comprises a personalized content application.
>
> 29. The method of claim 1 wherein the application-based information channel is accessible via a personalized content application particularly configured to run on the mobile device.

222. Symbian Forums includes an application running on the mobile device. (*See,* §IV.B.1.a.(3).) Forums is a "*personalized content application*" because a user manages his or her profile and can personalize his or her experience in a number of ways. The database used in the Forums network infrastructure "contains information from or relating to many different entities; it is organised into information fields which an entity can complete or have completed." (Randall, 8:26-28.) An entity can be, e.g., a user, a corporation or even a group such as a Forum. Through the Forums infrastructure, a user enters "basic identity data about themselves" including "name, contact numbers, and addresses" in the database and accesses services to provide location, availability and mood information as well as to define an identity avatar which are associated with the user's database entry. (Randall, 23:14-17.)

223. Randall's Table 1 is an application view of data associated with an entity (user, Alice). "Some of the information is entered by Alice" and other information is populated automatically. (Randall, 66:16-19.) A view of this data is "provided on Alice's mobile device to allow her to manage her data." (Randall, 66:19-20.) For example, Alice can add personalized notes for home (sorry about dinner) and work (in meeting), her current mood (very tired), and a subject to send when making a telephone call (dinner tonight). (*See* Randall, Table 1.) She can also provide a list of her hobby and book preferences. (*See* Randall, Table 1; Forsyth, 7:20-25 ("An 'embedded discussion' version of Forums allows the creation of a threaded discussion attached to personal information stored on a remote server. Storing personal information (contact lists, diaries, photographs etc) on a remote server is one possible model of enabling robust storage combined with easy access to personal information.")

224. Symbian Forums further provides a user with the capability of creating a personalized Forum which is also a "*personalized content application*" operating within the Forums application. Forsyth describes the creation of both private forum groups and public forum groups. Public groups "are collections of people with interests in common, who do not necessarily know each other prior to their membership of a group." (Forsyth, 17:5-7.) A private group, in contrast, is "used amongst individuals who already know each other in some way." (Forsyth, 13:63-

64.) These forums "may be used for example to discuss and arrange an outing to the cinema." (Forsyth, 13:64-66.) A user can also use a private forum "to share, amongst a pre-defined group, **personal content** such as photographs, opinions, music playlists, music tracks etc." (Forsyth, 4:9-11.)

225. Thus, the combination of Randall and Forsyth discloses "*the identified application-based information channel comprises a personalized content application*" [2] and "*the application-based information channel is accessible via a personalized content application particularly configured to run on the mobile device*" [3].

D. Claim 3—Collaborative Workspace

3. The method of claim 1 wherein the identified application-based information channel comprises a collaborative workspace.

226. Randall and Forsyth provide numerous examples of forums where members of a group collaborate—"*a collaborative workspace*." In fact, Symbian Forums is designed with the goal of collaboration and group discussion. Forsyth describes Forums as "a tool for group working and communication." (Forsyth, 2:59-60; *see* Forsyth, 5:27-30 ("Forums … facilitates open discussion amongst a group …").) Within each group (Forum), multiple users contribute content such as messages, photos, audio files, graphics, or other data, as I discussed in my analysis of the independent claims.

227. Forums allows a user flexibility when creating an individual Forum. A Group (Forum) "can be defined by a number of different parameters" and is "not necessarily limited to the kinds of groups currently known (e.g., groups of friends or work colleagues." (Forsyth, 3:61-63.) For example, the group object (Forum) "could be related to a particular interest, such as being gaming related, with group members being those people with an interest in playing a particular kind of computer game." (Forsyth, 4:2-5.)

228. Forsyth teaches that a Forum can be used for a "Collaborative Activity." (Forsyth, 11:32-34.) Forsyth recognizes that "groups go and do things." (Forsyth, 11:34-35.) Forums "acts as springboard for playing games, going surfing, listening to music etc." (Forsyth, 11:35-37.) For example, a Forum can be as simple as collaborating to "see[] who is there to play a game" or individual Forums can be "dedicated to particular games/game areas." (Forsyth, 11:37-39.)

229. Forsyth's "Social Scheduling" Scenario 3 provides a specific example of a "*collaborative workspace*" that allows a user in the group to pose a question and members of the group to collaborate and provide an answer. In this Scenario, a user "creates a new Forum titled 'Anyone fancy a trip to the cinema next week some time?" (Forsyth, 8:44-46.) The user also specifies individuals to invite to participate in the group. (*See* Forsyth, 8:48.) The central server "handles contacting each group member and handles also storing the message thread relating to this subject."

(Forsyth, 8:48-52.) The group members discuss (collaborate on) "which night to go on perhaps using some simple control to indicate their preferred days, which is then reflected in a diagram showing the aggregate), which actual cinema to use, and which film to see." (Forsyth, 8:56-60.) The Forum also "has links to trailers, reviews and schedules etc. for each film … which are all used to inform the discussion." (Forsyth, 8:60-64.) After the group reaches agreement, the user "uses a link to book the tickets." (Forsyth, 8:65-66.)

E. Claim 4—"Chat Channel"

4. The method of claim 1 wherein the identified application-based information channel comprises a chat channel.

230. Symbian Forums, described by Randall and Forsyth, is a group-based, two-way communication platform allowing users to interact with one another. Forums "is designed specifically to allow current and very popular internet type services (e.g., **chat/instant messaging between groups**) to be handle[d] effectively between mobile devices." (Forsyth, 2:42-45, 5:10-14 (same).) Forsyth's Figure 1 (reproduced below) specifies the capabilities of Forums including "creat[ing] a discussion between group members on your own device." (*See* Forsyth, Table 1; *see also* Forsyth, 5:27-30 ("Forums … allows multiple **chat-style** conversations to take place simultaneously.").) As I discussed throughout, the Scenarios presented in Forsyth illustrate a Forum starting with an original post followed by replies from other Forum members.

Capability:	**Can you create a discussion between group members on your own device?** (Important since it facilitates setting up a group discussion)	**Push delivery?** (Push is more convenient to mobile users)	**Is it possible to retain a long term record of exchanges between group members?** (An important attribute for many new kinds of services)	**Can you deliver messages to all members of a group, or is it restricted to one to one?** (Clearly critical to group based messaging)	**Do all group members see the same, unitary message thread, or are there instead many separate individual messages?** (A single, unitary message entity (e.g. a thread) makes message organisation and navigation far easier.)	**If a recipient is off-line (e.g messaging app not open), are they alerted anyway?** Potentially very important for mobile useage because of the high proportion of time users may not be on-line (i.e. actively using their messaging application).
Web bulletin board	No	No	Yes	Yes	Yes	No
Chat/instant messaging	Yes	Yes	No	Yes	Awkward	No
Group e-mail	Yes	No	Awkward	Yes	No	No
SMS	Awkward	Yes	No	Awkward	No	Yes
Forums	**Yes**	**Yes**	**Yes**	**Yes**	**Yes**	**Yes**

Forsyth, Figure 1

231. In addition to ability to chat simultaneously with all members of the forum, Forums "include[s] a **Private chat function**" which allows "a Forum participant to establish a private conversation (e.g., SMS or voice) with another Forum participant." (Forsyth, 7:9-12.)

232. Accordingly, the combination of Randall and Forsyth discloses "*the identified application-based information channel comprises a chat channel*."

F. Claims 8-9—"Wireless Networking Functionality" Claims

233. Independent claim 1 recites "*determining information associated with at least one wireless networking functionality of the mobile device*" [1C]. Claims 8-9 further narrow this limitation by specifying what "*the information*" comprises. The combination of Randall and Forsyth discloses each of these claims.

234. Claim 8, reproduced below, recites that the information determined in limitation [1C] "*specif[ies] at least one messaging action implementable over said at least one wireless network.*" I discussed this limitation in my analysis of limitation [1C]. For the reasons discussed in that section (§IV.B.1.b.(3)), the combination of Randall and Forsyth discloses claim 8. And the combination of Randall and Forsyth likewise discloses a "wireless network" under any proposed construction for the same reasons it discloses "wireless networking functionality" under either Patent Owner's or Meta's proposed construction.

> 8. The method of claim 1 wherein the information associated with said at least one wireless networking functionality of the mobile device comprises information specifying at least one messaging action implementable over said at least one wireless network.

235. Claim 9, reproduced below, recites that the information determined in limitation [1C] "*specif[ies] at least one collaboration action implementable over said at least one wireless network.*" I discussed this limitation in my analysis of limitation [1C]. For the reasons discussed in that section (§IV.B.1.b.(3)), the combination of Randall and Forsyth discloses claim 9.

9. The method of claim 1 wherein the information associated with said at least one wireless networking functionality of the mobile device comprises information specifying at least one collaboration action implementable over said at least one wireless network.

G. Claim 13—Captured Content

13. The method of claim 1 wherein the captured content is obtained from a device-captured data source of the mobile device, the device-captured data source comprising a source of at least one of device-captured video data, device-captured image data, device-captured audio data and device-captured location coordinates.

236. As I discussed in §IV.B.1.b.(1) for limitation [1A], the combination of Randall and Forsyth describes "*capturing content as a mobile device*" including capturing a message, capturing a photo, capturing a music file, and capturing a graphic.

237. As I discussed in §IV.B.1.b.(1).(a), Randall describes a function called "[t]ake a picture" which involves photo capture. (*See* Randall, 80.) This function is supported by "a special type of mobile phone, with a photographic lens." (Randall, 80.) I note that the Nokia 7650 that I described above included digital imaging (via a digital camera). In this "[t]ake a picture" function, Randall directs the user to "[p]oint the phone at something that interests you or makes you laugh, press the button, and it takes a digital picture which you can send to your friends." (Randall, 80.) Randall also describes a "[p]ersonal view" feature utilizing a "[c]amera in the wireless information device" for "posting images" to the server. (Randall, 74.) Thus, the combination of Randall and Forsyth discloses a photo (image) ("*the captured*

content") "*is obtained from a device-captured data source of the mobile device, the device-captured data source comprising a source of ... device-captured image data*" (camera in the phone).

238. Randall describes capturing a graphic via a "[w]rite-[o]n" function and Forsyth describes a feature called "vandali[z]ing." (Randall, 79; Forsyth, Fig. 13.) With the "[w]rite-[o]n" function, "[i]nstead of text-messaging and keying-in your message, a new device which is a cross between a mobile phone and a palm pilot will let you write on the screen – in your own handwriting – and send the entire image as a message instead." (Randall, 79.) Thus, the combination of Randall and Forsyth discloses a graphic (image) ("*the captured content*") "*is obtained from a device-captured data source of the mobile device, the device-captured data source comprising a source of ... device-captured image data*" (screen capture capability on phone).

239. As I discussed in §IV.B.1.b.(1).(c) Forsyth discloses capturing a music file, which is an "*audio file*" at the wireless device. (Forsyth, 3:31-34, 4:9-11, 9:21-22, 11:41-47.) Forsyth further discloses that "users may send text or voice messages to a Forum from any communications device." (Forsyth, 12:65-67.) A POSITA would have understood that voice comments and music files are "*device-captured audio data*."

H. Claims 14 and 15—Mobile Device Claims

14. The method of claim 1 wherein the mobile device comprises at least one of a mobile telephone, a tablet computer and a camera.

15. The method of claim 1 wherein the mobile device comprises a global positioning system (GPS)-based navigational device.

240. Randall and Forsyth both discloses that the "*mobile device*" is a "*mobile telephone*" [14]. Specifically, both disclose that "[t]he term 'wireless information device' used in this patent specification should be expansively construed to cover any kind of device with two way wireless information capabilities and includes without limitation radio telephones, smart phones …" (Randall, 1:7-10; Forsyth, 1:16-22.) A "radio telephone" and a "smart phone" are each a "*mobile telephone*."

241. Randall and Forsyth also both disclose or suggest that the "*mobile device*" is a "*tablet computer*" [14]. Both teach that a wireless information device includes a "communicator." (Randall, 1:7-11; *see also*, Forsyth, 1:16-35.) As I discussed in §IV.B.1.a.(2), a POSITA would have known one communicator designed by Symbian is based on the Quartz design which "is a pen-based tablet device with integrated telephony." (Allin, 4.) Randall suggests such a product design in the discussion of the "[w]rite-[o]n" function that I described above. (Randall, 79.)

242. Randall and Forsyth also both discloses that the "*mobile device*" is a "*global positioning system (GPS)-based navigational device*" [15]. Forsyth teaches that device location is obtained "via some onboard method such as **GPS**." (Forsyth,

13:45-58.) Randall similarly discloses obtaining location "via a GPS wireless information device." (Randall, 74; *see* Randall, cl. 7 (reciting that user location "is obtained using a GPS system").) GPS location data is stored in the database associated with the user, as shown in the excerpt of Table 1 (reproduced below).

Table 1

Alice's iData			
Field/Attribute	**Category**	**Details**	**i-Groups**
First name	personal	Alice	all
Family name	personal	Edwards	all
Title	work	European Marketing Manager	all
⋮			
Bluetooth	location	Bluetooth pods 1000-1020 ...Sentinel room 2…	
GPS	location	London W1, Seymour St.	partner
Hobby	preferences	Photography, travel	friends
Book	preferences	Maverick	friends
AlbumOfTheWeek	InstaPoll		friends

Randall, Excerpts from Table 1

243. Randall describes several navigation-like features. For example, in the people tracking feature, after the user has subscribed to the location service,

associated groups (e.g., friends/parents) "could add a 'map' application to their own devices, which could show their position on digital maps and also, by using the location attribute of the user's database, it could also show the position of the user." (Randall, 6:1-4.)

244. Randall also describes a feature called "[y]our map and then some" where "[a]t the touch of a button, your phone can display a map of the area you are standing in." (Randall, 83.) Randall further describes a feature called "[r]endezvous" where a "service on your mobile phone [] help[s] you meet friends and family in crowded or unfamiliar places" and "you can elect to have your location visible to others - so using your phones everyone in your group can tell precisely where the other are." (Randall, 83.)

245. Because the mobile device includes a GPS component and integrates navigational features, the combination of Randall and Forsyth discloses the "*mobile device comprises a global positioning system (GPS)-based navigational device*."

I. Claims 24 and 25—"Integrated Content" Claims

> 24. The method of claim 1 further comprising accessing integrated content at the mobile device via the identified application-based information channel, the integrated content comprising a combination of at least a portion of the captured content and at least a portion of the determined information.
>
> 25. The method of claim 1 wherein integrated content is stored by the at least one server, the integrated content comprising a combination of at least a portion of the captured content and at least a portion of the determined information.

246. As I discussed in §IV.B.1.b.(4) for limitation [1D], the combination of Randall and Forsyth discloses "*providing* ***the captured content*** *from the mobile device ... in association* ***with the determined information*** *into the identified application-based information channel*" to the server. The "*captured content*" and its associated "*determined information*" of Forum message posted by a user is "*integrated content.*"

247. The "*integrated content*" is stored in a message/communication object at the server which contains the original Forum message (content + determined information) and "[a]ll linked (e.g. threaded) communications, such as replies and comments." (Forsyth, 4:19-24; 3:20-24 (server "maintain[s] m[e]ssage threads and mak[es] the[m] readable to recipients etc.").) Thus, the combination discloses "*integrated content is stored by the at least one server, the integrated content comprising a combination of at least a portion of the captured content and at least a portion of the determined information*" [25].

248. The "*integrated content*" is accessed at the mobile device via the Forum ("*application-based information channel*"). For example, in Scenario 1, the server "forwards the increment [new message(s)] to all the people on the current (server-maintained) address list." (Forsyth, 6:1-22.) Within the Forum (e.g., Naked Chef), "the user is shown the messages posted to that Forum." (Forsyth, 6:38-40, Figure 7 (below).) "Messages appear in date order, i.e. newest messages appear at the bottom." (Forsyth, 6:40-42.) As shown, captured content (message; "No way!") and at least a portion of the determined information (poster identity (e.g., Lucy) and date/time (Jan 8th 10:30 am)) is "*access[ed] … at the mobile device via the identified application-based information channel*" (Naked Chef Forum).

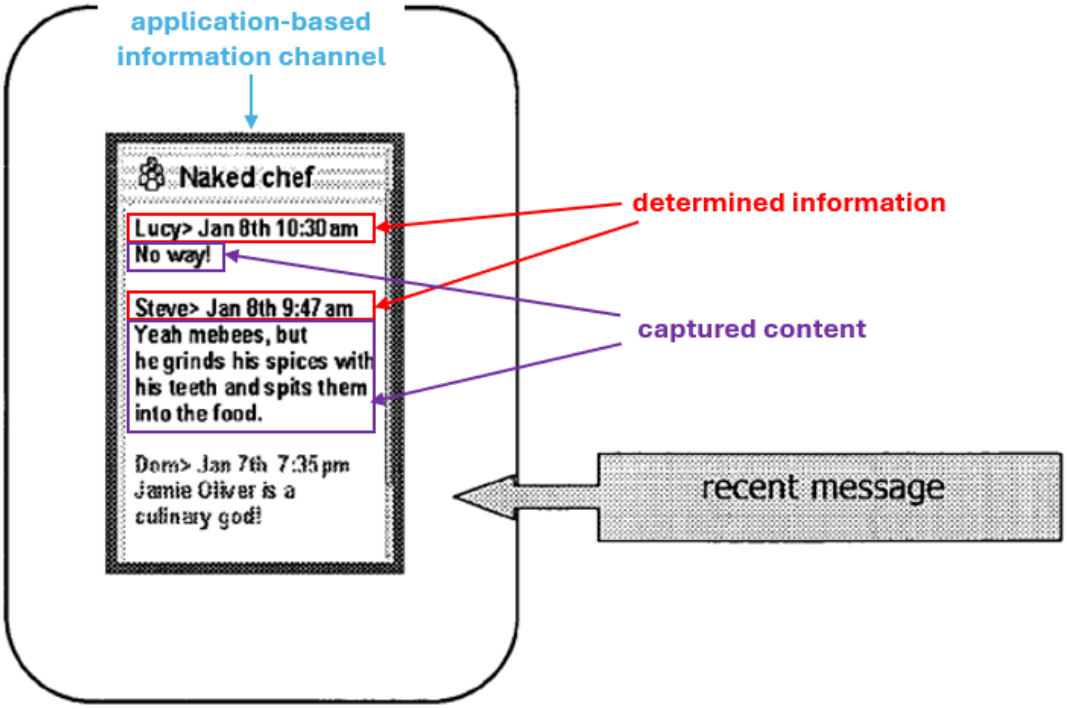

Symbian Forums—Forsyth, Figure 7

249. Accordingly, the combination of Randall and Forsyth discloses "*accessing integrated content at the mobile device via the identified application-based information channel, the integrated content comprising a combination of at least a portion of the captured content and at least a portion of the determined information*" [24].

J. Claim 28—Channel "Accessible Via a Mobile Website"

28. The method of claim 1 wherein the application-based information channel is accessible via a mobile website previously established for the user of the mobile device.

250. The Symbian Forums infrastructure, illustrated in Randall's Figure 4 below, "acts in effect like a fully personalized **web portal**, yet with the information links not consolidated in one general area, but instead distributed to the domains in which they are most likely to be relevant to a user." (Randall, 13:22-24.) Forums establishes "web portals" (websites) for users of wireless devices through the use of "standard data transports such as WAP or http for data access" to the server (Randall, 45:14-15) and through the use of Randall's ADS naming scheme which uses web server addresses.

251. Use of WAP teaches or at least suggests a Forum is a "*mobile website.*" WAP, which I discussed in §IV.A.1.c.(2), is "based on the WWW communication protocols" and "WWW content formats." (WAP Architecture, 13.) WAP "enables the supplying of advanced Internet services into digital mobile stations of wireless

communication networks." (Salmi, 6:63-65.) The WAP proxy "allows content and applications to be hosted on standard WWW servers." (WAP Architecture, 14.) For example, when a user of a WAP-enabled terminal enters a URL, the WAP-enabled terminal transmits a wireless Internet service request to the WAP gateway server. (*See, e.g.,* Park, 1:66-2:4.) The WAP gateway may respond to the request if hosting the request web page or may convert the request into an HTTP request for a server on the Internet. (*See, e.g.,* Park, 2:5-10.) The Internet web server responds and the WAP gateway converts the HTTP response into a WAP response for transmission to the WAP-enabled terminal. (*See, e.g.,* Park, 2:15-25.)

252. Randall's naming convention further underscores that Forums are designed to be mobile websites. Randall teaches that a "wireless information device (as well as web browsers) can access an entity's database by sending to the server an unchanging pointer or key (an 'ADS Number') which is unique to that entity." (Randall, 9:13-15.) Randall's "ADS numbers are typically constructed using text strings and can be though[t] of as defining a namespace." (Randall, 9:17-18.) The ADS number "in one implementation [is] an **address on a web server**–for example **www.indirect.com/Alice**." (Randall, 64:25-26.) "This address is in effect a pointer to entity specific data held on the **web server**, in this case, Alice's information." (Randall, 64:27-28.)

253. Randall describes an exemplary webpage associated with a user's record stored in the database. Specifically, Randall teaches that "[i]nformation is placed onto the database by an entity so that it can be readily shared with other entities: the database in effect represents a web page containing information specific to that entity." (Randall, 8:29-31.) The server presents a different webpage based on the access rights associated with the requester. For example, when a user's device (e.g., Bob's device) sends the ADS Number associated with another user (e.g., Alice) to the server, "the server recognises Bob's device and allows the device to read Alice's information held on the database which is specified as being accessible to Bob." (Randall, 9:18-21.) Randall's Table 3 (reproduced below) illustrates the information displayed in the view of Alice's "website" presented to a user in the business 1 group. This view is different than the webpage presented when Alice's device requests access. (*See, e.g.,* Randall, 66-67 (Table 1: Alice's view of data).)

Name	Ms Alice Edwards
Title	European Marketing Manager
Company	Wireless Information Device gets R Us
ADS Number	urls.co.uk/1238947532345235
Last verified	7th July 2000
e-mail	alice.edwards@Wireless Information Device getsrus.com
Work phone 1	0207 200 2000
Work phone 2	0207 200 2012
Mobile	0840 1234 567
Address	1 The Science Park, London, N1 9PQ
Other info	Met her at meeting with Tom Jones, August 2000.

Randall, Table 3

254. Forsyth confirms that an individual Forum "*is accessible via a mobile website*", explaining "Forums facilitates the situation where, to a degree, the other members of a group are 'always there' for a user" including "ensuring other interfaces—e.g., **via the Web** and PCs, and possibly via normal phones—are available." (Forsyth, 11:23-31.)

255. I illustrate Forum's web-based architecture using Randall's Figure 4 (reproduced below). A user connected to the Internet enters the ADS number associated with the Forum, Naked Chef, which is www.forums.com/NakedChef and connects to the server hosting that Forum via HTTP; the server processes the request and responds using HTTP over the Internet (blue line). A mobile device user similarly enters (directly or via a local application) the ADS number

(www.forums.com/NakedChef) of the Forum and connects to the WAP server over the GSM network (purple). If the WAP server hosts the Forum (as shown below), it processes the request and responds. If a different web server hosts the Forum, the WAP server contacts that server via HTTP, as I discussed above.

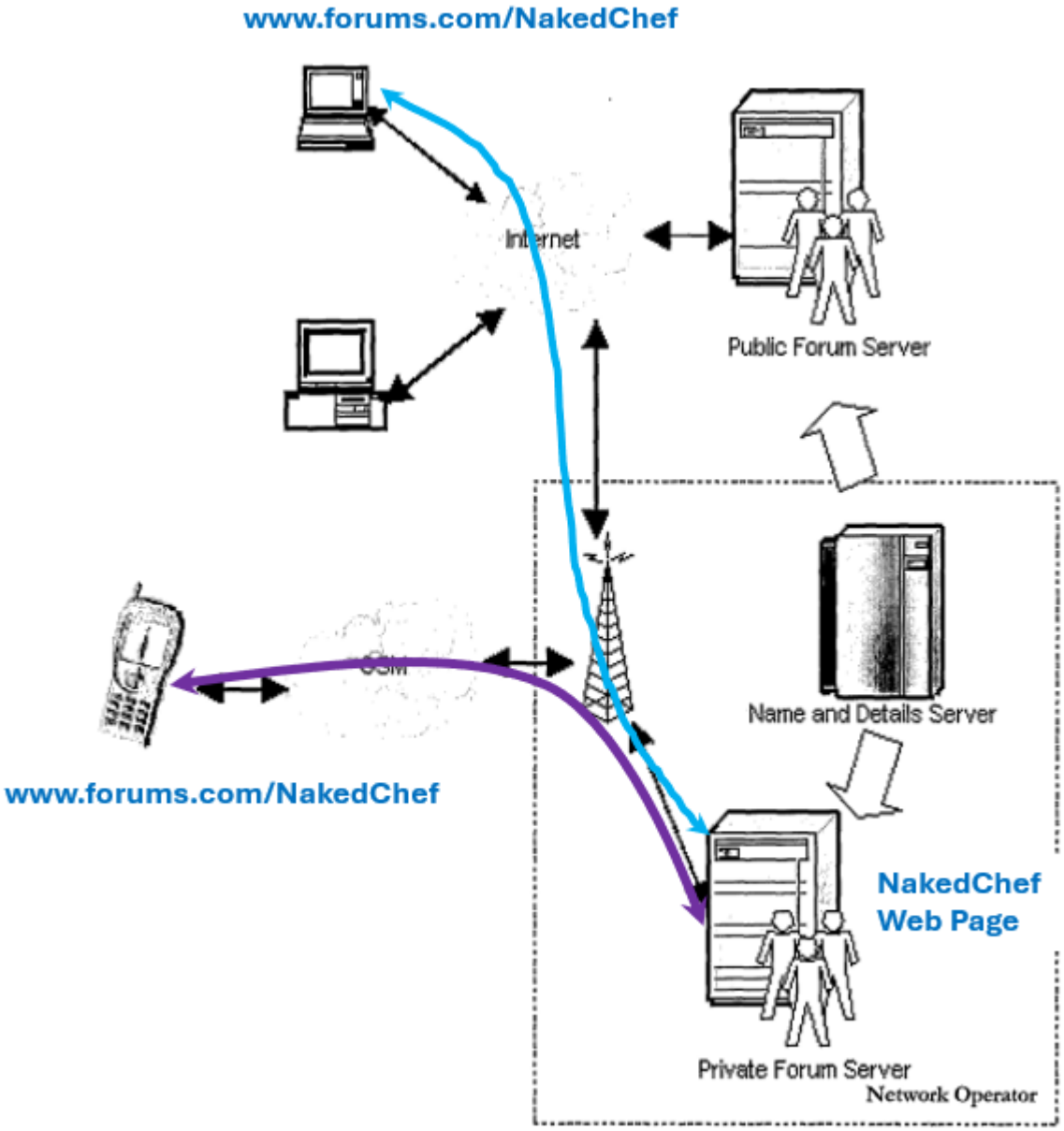

Symbian Forums—Randall, Figure 4

256. Thus, the combination of Randall and Forsyth renders obvious "*the application-based information channel is accessible via a mobile website previously established for the user of the mobile device.*"

K. Claim 30—Other Content

30. The method of claim 1 wherein the other content comprises at least one message relating to the captured content that is received at said at least one server and inserted by said at least one server into the application-based information channel.

257. The combination of Randall and Forsyth discloses that "*the other content comprises at least one message relating to the captured content.*" As I discussed in §IV.B.1.b.(5) for limitation [1E], "*the other content*" includes replies (messages) posted to a Forum. (*See, e.g.,* Forsyth, 6:18-22 (replies are "new message[s]" posted to the Forum), 7:36-43, 9:29-31.) Because replies are associated with the Forum, the additional messages "*relat[e] to the captured content*." As shown in Forsyth's Figure 7 (reproduced below), for "group based text messaging scenario" (Scenario 1), the "*other content*" ("No way!") is a "*message related to the captured content*" ("Yeah mebees, but he grinds his spices with his teeth and spits them into the food") which is inserted into the Naked Chef Forum ("*application-based information channel*").

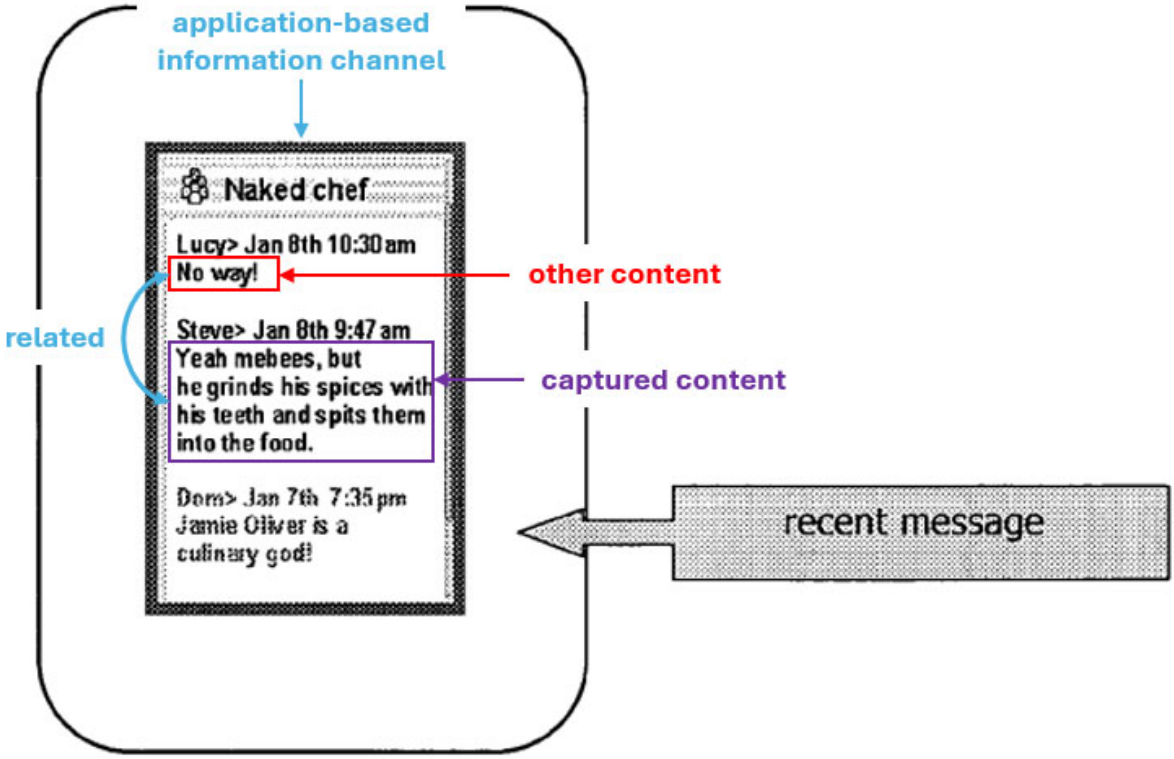

Symbian Forums—Forsyth, Figure 7

258. It is not clear whether the claimed phrase "*that is received at said at least one server and inserted by said at least one server into the application-based information channel*" modifies "*the captured content*" or the "*other content.*" Regardless, the combination of Randall and Forsyth discloses that both the "*captured content*" and the "*other content*" is "*received at*" the server and "*inserted by*" the server "*into the application-based information channel.*"

259. As I discussed in §IV.I for claim 24, Forums uses a "single 'communication object'" to hold all communications linked to the initial message (such as replies and comments). (Forsyth, 4:20-24.) The server "maintain[s]

m[e]essage threads and mak[es] the[m] readable to recipients etc." (Forsyth, 3:19-24.) Thus, Forsyth teaches that "*captured content*" and "*other content*" is provided to (received at) the server and inserted into the communication object associated with the Forum ("*application-based information channel*").

260. Forsyth's "group based text messaging" (Scenario 1) describes this feature. In this Scenario, as I have discussed previously, new messages are sent to the server and the server "forwards [] the increment to all the people on the current (server-maintained) address list." (Forsyth, 6:1-22.) Within the Forum (e.g., "Naked Chef"), "the user is shown the messages posted to that Forum", as shown above in Forsyth's Figure 7. (Forsyth, 6:38-40.) "Messages appear in date order, i.e. newest messages appear at the bottom." (Forsyth, 6:40-42.)

261. The combination of Forsyth and Randall therefore discloses "*the other content comprises at least one message relating to the captured content that is received at said at least one server and inserted by said at least one server into the application-based information channel*."

V. GROUND 2: Combination of Pelkey and Eck Renders Claims 1-4, 8-9, 13-15, 17-19, 22-25 and 28-30 Obvious.

A. Overview of the Combination

262. U.S. Patent 7,056,217 to Pelkey et al. ("Pelkey") and U.S. Patent 6,716,103 to Eck ("Eck"), both assigned to Nintendo Co., Ltd., relate to different

aspects of a messaging system established for users of handheld Nintendo game machines, specifically the well-known Nintendo Game Boy® device.

1. Pelkey

263. Pelkey was filed on November 28, 2000. Pelkey relates "to a messaging service for communicating messages between and among users of video game systems." (Pelkey, 1:14-16.) Figure 1B of Pelkey, reproduced below, illustrates a network "in which the messaging service described herein may be implemented." (Pelkey, 2:58-60.) The network "includes game systems 10 connected via communications circuits (e.g., modems, network interfaces, etc.) to a wide area network." (Pelkey, 2:60-62.) A network server 14 "stores games that may be played by users of the network." (Pelkey, 3:4-5.) A messaging server may be included within the network server or as a standalone component. (Pelkey, 3:9-31.)

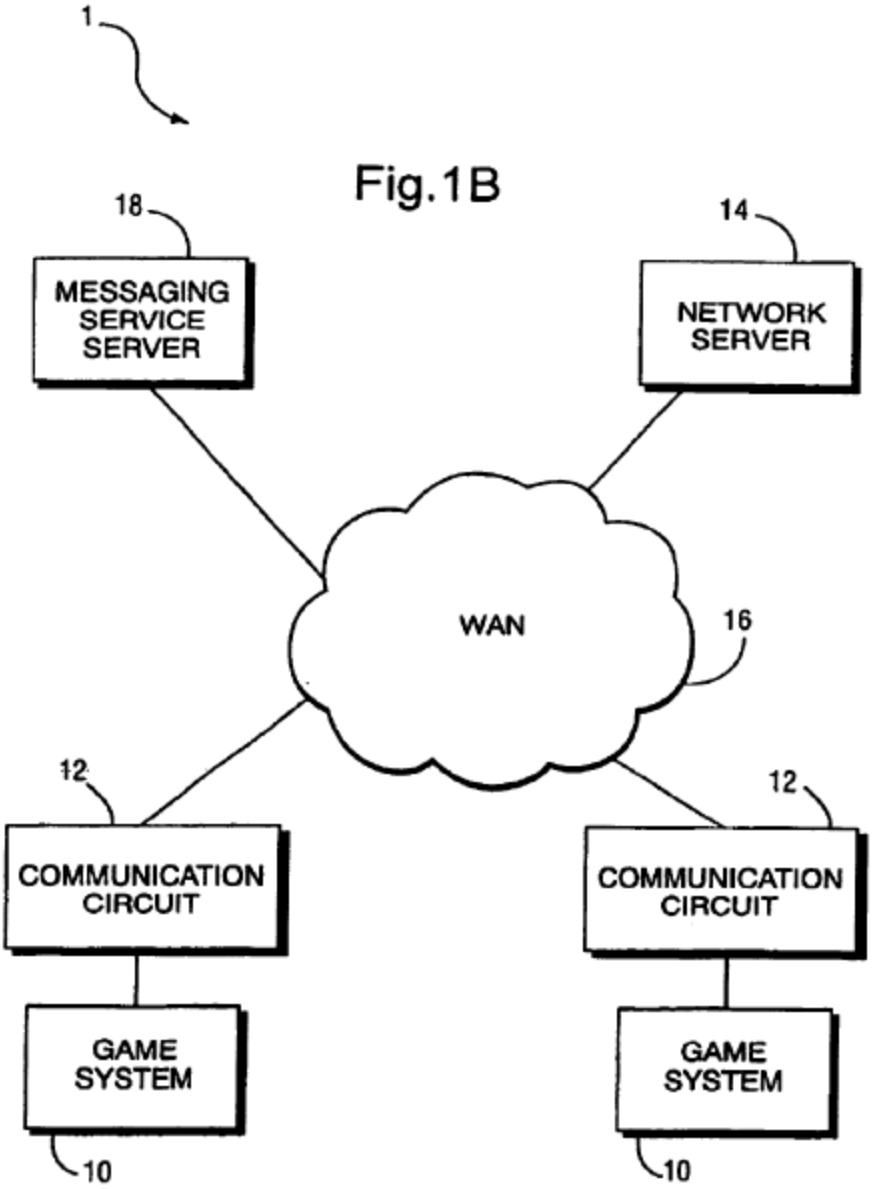

Pelkey, Figure 1B

264. Two game systems may be used for gate system 10. (Pelkey, 3:32-33.) First, "a portable (hand-held) color-display game system," shown, for example, in Figure 3B (below) may be used. (Pelkey, 4:55-57.) Second, a game console such as the N64 video game system may be used. (Pelkey, 3:38-48, Figure 2.)

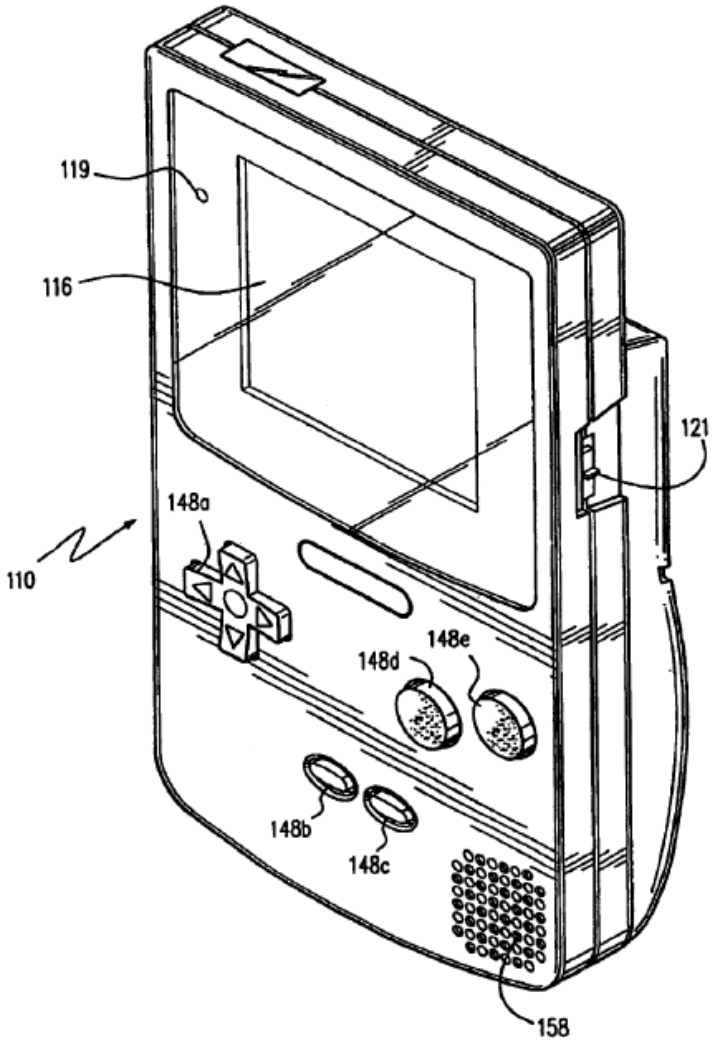

Pelkey, Figure 3B

2. Eck

265. Eck was filed on September 11, 2000. Eck discloses a modified version of the Nintendo Game Boy® ("portable game machine") that "provides enhanced multi-player capabilities through communications with other game machines." (Eck, 1:48-51.) Multi-player game play is achieved using a "pager cartridge" which is inserted into the "portable game machine" which may contain "a modem or other

network interface means for establishing communications over a network such as the Internet." (Eck, 9:43-46, 9:60-61, 27:51-53.) One class of games capable of being used with the "portable game machine" is "Multiple User Dungeon (MUD) games" which "are Internet-based on-line exploration and quest games in which an open-ended number of players simultaneously exist in the same game world, sharing experiences and adventures." (Eck, 10:1-7.)

266. In an exemplary multi-user embodiment, Eck uses a "pager cartridge" to access "PagerWorld, a virtual community for the network of all users having pager cartridges." (Eck, 10:20-23.) In "PagerWorld," "[p]layers can find pen-pals" and "view message boards," among other activities. (Eck, 10:40-42.) "Players are represented in PagerWorld by a 'persona character' … that all other PagerWorld players will see." (Eck, 10:23-25.) "The system also enables bidirectional transmission of messages with images and sound bytes to other pagers in the network using, for example, a digital camera cartridge in combination with a pager cartridge." (Eck, 16:42-45.) Importantly, "image data obtained with a digital camera cartridge" can be used to "customize the persona character." (Eck, 12:38-40.)

267. The "pager cartridge provides a two-way paging device that has the ability to receive messages from other users in the paging system as well as from the paging system operator." (Eck, 9:40-43.) A user can conduct "messaging" activities within PagerWorld including "broadcasts to all pagers," "group messages," "digital

camera picture transmission (with/ without sound)," "messages plus sound bites," and "messages to and from Internet." (*See* Eck, 20:6-36.) Messages are read, composed and sent from the "Message Center" inside PagerWorld. (Eck, 11:27-29.) "Message Center" includes an "Address Book" that "provides a listing of other users by their handles" and "the persona character of the other user as it appeared on his/her last communication with the user." (Eck, 11:32-35; *see* Eck 12:16-19.) "Messages from the paging system operator may be sent to all users in the paging system, to certain groups of users in the paging system or to a particular user in the paging system." (Eck, 9:46-49.)

268. "PagerWorld is updated" is updated at regular intervals including "via night-time downloads when pager cartridge is in SLEEP mode." (Eck, 13:1-5.) "When this occurs, new areas are made available for the player to 'adventure' within." (Eck, 13:5-6.)

3. Motivation to Combine Pelkey and Eck

269. A POSITA would have been motivated to combine Eck's teachings regarding PagerWorld with the network and message server architecture taught in Pelkey.

270. Pelkey and Eck both disclose an enhanced version of the Ninetendo GameBoy ® that is in the same field as the '039 patent—"network-based communication systems." (*See* EX-1001, 1:28-30; Pelkey, 1:37-42; Eck, Abstract.)

Pelkey and Eck are also reasonably pertinent to problems addressed by the ’039 patent, namely “optimizing” the sharing of information content on mobile devices. (*See, e.g*, EX-1001, 1:48-53.)

271. Eck discloses the features of a multi-player game, PagerWorld. Eck further discloses the ability to share photos and sound clips and exchange messages with other players. In the preferred embodiment, such information is exchanged using a “pager cartridge” where “message charges are generally based on the number of characters in the message.” (Eck, 16:57-60.) While Eck discloses that its “invention” can be applied to other technologies like WAP (Eck, 25:17-20), it does not specifically disclose a client-server structure as taught in Pelkey.

272. Pelkey discloses the use of a network server and message server to facilitate game play and exchanging messages amongst users. But it does not specifically disclose the integration of messaging and sharing content like photos and sound clips with other users within its client-server environment. A POSITA would be motivated to apply the network and message server architecture in Pelkey to Eck in order to avoid the charge-based system for exchanging messages and photos via pager cartridge in Eck. In addition, a POSITA would be motivated to modify the “pager cartridge” in Eck as necessary to use PagerWorld in Pelkey given the disclosed benefits of PagerWorld including “exploration and adventure,” “chat and community interaction,” and “character growth.” (Eck, 10:13-19.) Notably,

Pelkey does not describe any game play that includes in-game messaging in conjunction with the aforementioned features. In addition, the combination is nothing more than the application of a known technique (Eck's PagerWorld game) to a known method/product (Pelkey's client-server based messaging server) which was ready for further improvement to achieve predictable results. Replacing the pager system infrastructure in Eck with the client-server architecture in Pelkey is the simple substitution of a one known element for another to achieve a predictable result (internet-based functionality). As is using the PagerWorld "pager cartridge" in the Pelkey portable game machine.

273. A POSITA would have had a reasonable expectation of success in the combination and the results of the combination would have been predictable because both references are directed to the same product and activity (game play). Both Pelkey and Eck disclose the desirability of combining messaging capabilities with game play in a portable gaming system. (Pelkey, 2:20-23; Eck, 10:32-44.) And as explained below, the complimentary network architecture disclosed in Pelkey and Eck further demonstrates that such a modification could be made with a reasonable expectation of success.

B. Independent Claims

1. Client-Side Independent Claims 1 and 18

274. As I discussed for Ground 1, the 2 client-side independent claims have substantially overlapping claim limitations. The table below sets forth the section in which each limitation is addressed.

Claim 1	Claim 18	Section
[1P] A method comprising:		V.B.1.a
	[18P] A mobile device comprising:	V.B.1.b
	[18A] at least one processing element comprising a processor coupled to a memory; and	V.B.1.c
	[18B] at least one network interface;	V.B.1.c
	said at least one processing element being configured to:	V.B.1.d
[1A] capturing content at a mobile device;	[18C] capture content at the mobile device;	V.B.1.d.(1)
[1B] identifying a previously established application-based information channel into which the captured content is to be inserted, the identified application-based information channel permitting interaction between a user of the mobile device and one or more additional users;	[18D] identify a previously established application-based information channel into which the captured content is to be inserted, the identified application-based information channel permitting interaction between a user of the mobile device and one or more additional users;	V.B.1.d.(2)

Claim 1	Claim 18	Section
[1C] determining information associated with at least one wireless networking functionality of the mobile device;	[18E] determine information associated with at least one wireless networking functionality of the mobile device;	V.B.1.d.(3)
[1D] providing the captured content from the mobile device to at least one server for insertion in association with the determined information into the identified application-based information channel; and	[18F] provide, via said at least one network interface, the captured content from the mobile device to at least one server for insertion in association with the determined information into the identified application-based information channel; and	V.B.1.d.(4)
[1E] receiving other content, at the mobile device via the identified application-based information channel, from at least one of the additional users.	[18G] receive other content, via the identified application-based information channel, from at least one of the additional users.	V.B.1.d.(5)

a) Preamble [1P]: "method"

[1P] A method comprising:

275. The combination of Pelkey and Eck discloses a method for performing the actions recited in limitations [1A]-[1E] as discussed in §§V.B.1.d.(1)-(5).

b) Preamble [18P]: "mobile device"

[18P] A mobile device comprising:

276. The combination of Pelkey and Eck discloses a *mobile device*. As an initial matter, and as I noted in Ground 1, I understand that several constructions of

the term “mobile device” have been proposed in the MDT-Meta-Litigation and in the Meta-MDT-IPR. Pelkey and Eck discloses a “*mobile device*” under the constructions proposed in those cases.

277. Specifically, both Pelkey and Eck disclose a “portable game machine and, more particularly, to a **portable game machine** that is selectively configurable for one or more different operations such as **wireless communications**, global positioning, image capturing and combinations thereof.” (Eck, 1:12-16, Figure 1B (below); *see* Pelkey, 4:55-57 (“FIGS. 3A, 3B and 3C show a portable (hand-held) color-display game system 110”), Figure 3B.) An exemplary game machine is the “GameBoy® Color game machine,” (Eck, 3:29-33; Pelkey, 4:66-67), a commercially available product widely known by the general public and those skilled in the art as of the earliest possible priority date.

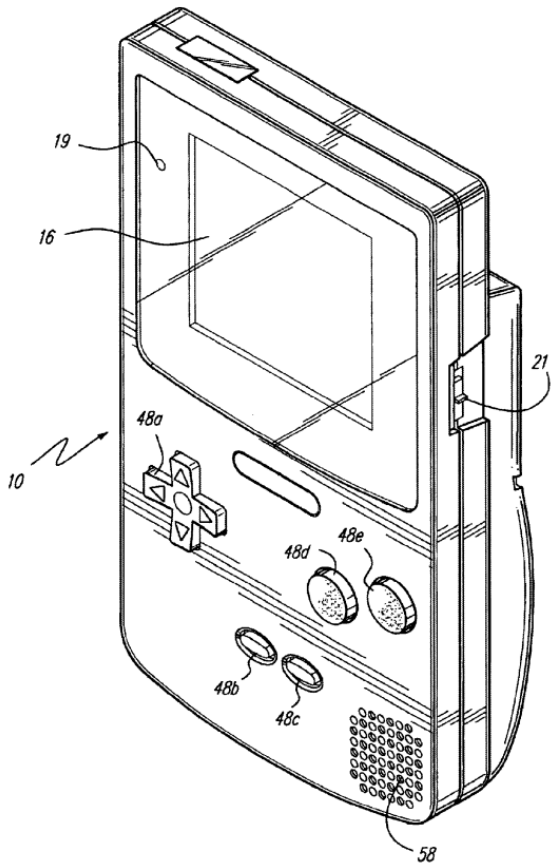

Eck, Figure 1B

278. The portable game machine described by both Pelkey and Eck is a "piece of handheld equipment" and therefore a "*mobile device*" under PO's MDT-Meta-Litigation construction. This portable game machine processes information and is capable of being configured for communication over a network, as I discussed above. Thus, the portable game machine is a "*mobile device*" under Meta's MDT-Meta-Litigation and Meta-MDT-IPR constructions. Finally, as illustrated by Eck's Figure 1B, the portable game machine has limited display space and because it lacks a physical or soft keyboard, a POSITA would have understood the portable game

machine also has limited navigational capabilities. Thus, the portable game machine is also a "*mobile device*" under PO's Meta-MDT-IPR construction ("a portable device with limited display space and limited navigational capabilities that connects to a mobile site and/or mobile channel via a wireless network").

c) Mobile Device Architecture Limitations [18A]-[18B]

[18A] at least one processing element comprising a processor coupled to a memory; and [18B] at least one network interface;

279. The combination of Pelkey and Eck discloses "*a processing element comprising a processor coupled to a memory.*" Eck explains that a cartridge including messaging functionality (e.g., a pager cartridge) "is provided for use with a game machine having a game program executing processing system including a microprocessor to execute a video game program and player controls operable by a player to generate video game control signals." (Eck, 1:60-65; *see also* Pelkey, 6:44-46 ("program contained in cartridge 112 [] includes program code for a messaging service client").) This arrangement is illustrated in Eck's Figure 2 (below) showing the portable game machine with an inserted cartridge. I note this figure which is identical to Pelkey's Figure 4.

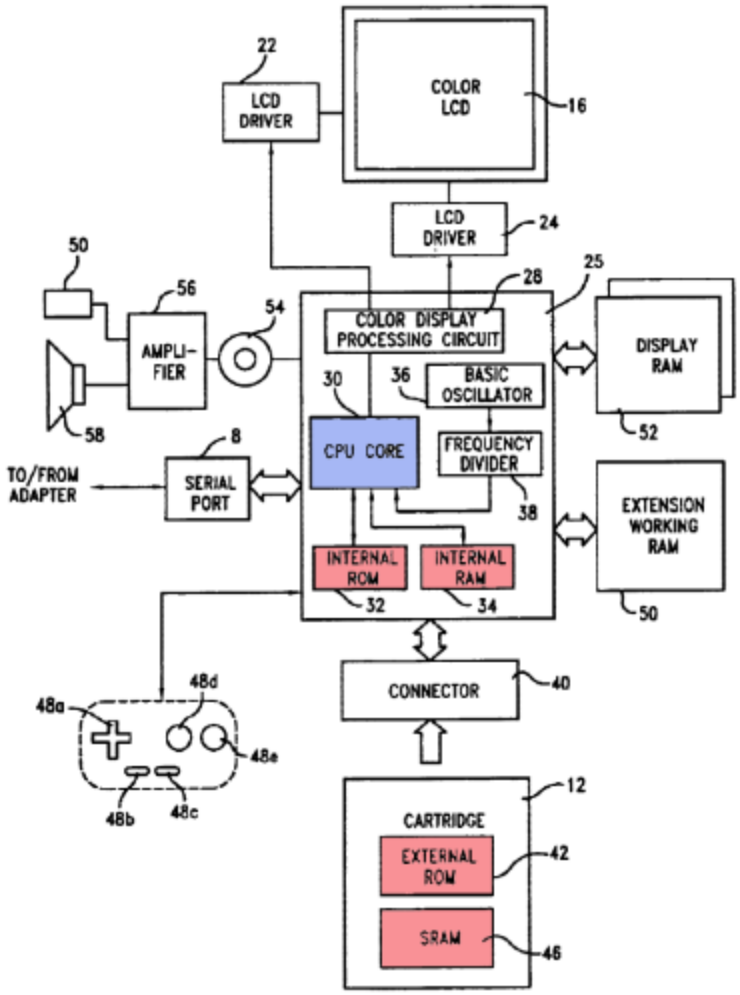

Eck, Figure 2

280. As shown above, the "game machine 10" includes "a central processing unit (CPU) 26 [mislabeled as 25 in Fig. 2 above]," which "further includes a CPU core 30 [shaded blue] that is connected to an internal read only memory (ROM) 32 and an internal random access memory (RAM) 34." (Eck, 3:42-46.) Eck explains that "[i]nternal RAM 34 is used as a work memory of CPU core 30." (Eck, 3:46-47.) For example, when executing a game program, "character data supplied from game cartridge 12 and the controller data from operating keys 48a–48e, CPU 26 executes

data processing and writes display data into a display RAM 52, using an extended RAM 50 when necessary" in accordance with the game program. (Eck, 4:46-50.) CPU 26 is the "*processor*"; ROM 50 and RAM 52 (shaded red) are "*memory*"; and as shown each of ROM and RAM is coupled to the processor.

281. Should PO contend that the recited "*memory*" in the "*processing element*" must store instructions executed by the "*processor*," I disagree, but the combination of Pelkey and Eck discloses this arrangement, as would any device running software. In the portable game machine illustrated above, the inserted cartridge includes ROM 42 which "contain[s] instructions" pertaining to, e.g., the messaging function. (*See, e.g.*, Eck, 4:5-6, 7:7-12 ("[p]ager cartridge 100 includes a memory 145 for storing software used in the pager operations … [i]t is of course possible to store the software for implementing at least some of these operations in the memory of game machine 10").) When inserted, the "game machine circuitry [] access[es] information contained with ROM 42 (and read/write memory 46), which information controls the game machine … under control of the ROM game program information." (Eck, 4:9-20.)

282. The combination of Pelkey and Eck discloses "*at least one network interface*." Pelkey discusses that the network for implementing a "messaging service" includes a game system 10 (e.g., the portable game machine) "connected via communications circuits 12 (e.g., modems, **network interfaces**, etc.) to a wide

area network 16 such as the Internet." (Pelkey, 2:60-62.) Pelkey explains that the communication circuits 12 "may be provided internally to the game system or embodied as cartridges … removably attachable to a port or bay of the game systems." (Pelkey, 2:65-3:2.) Eck discloses the embodiment of a network interface in a cartridge. As shown in Eck's Figure 5A, the pager cartridge includes "an antenna 130 connected to a conventional radio section 132 for receiving and sending messages." (Eck, 6:34-36; *see also* Eck, 7:36-53 (describing a pager cartridge includes a codec/DSP section, bandpass filter, RF mixer and dual PLL section, crystal, transmitter, receiver and antenna).) The radio section and/or antenna is a "*network interface.*"

d) Processing Limitations [1A]-[1E]/[18C]-[18G]

(1) "Captur[ing]/[e] Content" Limitations [1A]/[18C]

[1A] capturing content at a mobile device;
[18C] capture content at the mobile device;

283. The combination of Pelkey and Eck also discloses "*capturing content at a mobile device*" including at least capturing photos/images and sound clips/audio files at the portable game machine. Eck discloses "a game machine is provided with … digital camera circuitry configured to capture an image." (Eck, 2:16-18.) For example, Eck discloses that a messaging cartridge (e.g., pager cartridge), "is itself provided with a slot for receiving" another cartridge. (*See, e.g.*, Eck, 5:23-25.) One

example of a “piggy-backed” cartridge is a “digital camera cartridge,” illustrated in Figure 14 (below): “pager cartridge 1000 itself includes a built-in cartridge slot to accept game cartridges or other accessories (such as read/write memory cartridges, a digital camera, etc.), thereby enabling game play or digital camera operations while pager cartridge 100 is attached to game machine 10.” (Eck, 22:14-20, 23:36-38 (“digital camera cartridge is also selectively insertable … into the slot of another cartridge such as pager cartridge 100”).)

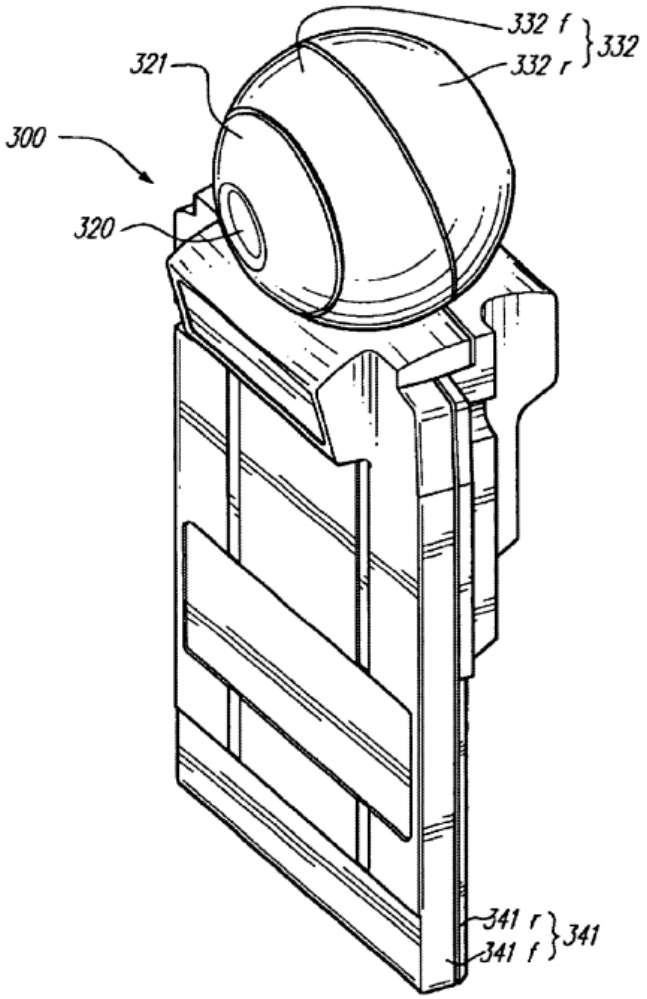

Eck, Figure 14

284. The portable game machine having an inserted messaging cartridge and an inserted camera cartridge "*captur[es] content.*" Eck's digital camera cartridge "is usable to **capture images**, which images may then be transmitted to others via an operation using" the messaging cartridge into which the camera cartridge is inserted. (Eck, 23:38-41; *see also* Eck, 2:15-18 ("a game machine is provided with … digital camera circuitry configured to capture an image").) The "digital camera cartridge" may also be "configured to **capture sounds** [and] these captured sounds may be used by game machine 10 and/or transmitted as a message using pager cartridge." (Eck, 9:20-23.)

285. In addition to the camera cartridge, Eck discloses other cartridges that can be piggybacked with the messaging cartridge to "*captur[e] content*." For example, Eck discloses that "a separate 'sound card' may be 'piggy-backed' to game machine 10" via the messaging cartridge. (Eck, 9:23-25.) Eck further discloses a "global positioning system (GPS) cartridge" that captures "user portion information" (i.e., user location). (*See* Eck, 22:28-29.)

286. Pelkey likewise discloses that a digital camera can be attached to its portable game machine. (Pelkey, 7:26-31.) Indeed, both Pelkey and Eck incorporate by reference the same Nintendo patent disclosure describing the camera in detail. (Pelkey, 7:26-31 *citing* U.S. Patent 6,435,969); Eck, 23:41-48 *citing* Ser. No. 09/430,169).)

(2) "Identifying" Limitations [1B]/[18D]

[1B] identifying a previously established application-based information channel into which the captured content is to be inserted, the identified application-based information channel permitting interaction between a user of the mobile device and one or more additional users [18D] identify a previously established application-based information channel into which the captured content is to be inserted, the identified application-based information channel permitting interaction between a user of the mobile device and one or more additional users;

287. The combination of Pelkey and Eck discloses "*a previously established application-based information channel.*" As noted in Ground 1, I understand that the parties in the Meta-MDT-IPR agree the term "*application-based information channel*" should be construed as "a computer program-based medium for transferring information." The combination of Pelkey and Eck discloses limitations [1B] and [18D] under the parties' construction of this term.

288. Eck discloses that the messaging cartridge includes a memory "storing software used" in the messaging (e.g., pager) operations and "one or more video game programs that are executable by CPU 26 of game machine 10." (Eck, 7:7-22.) In addition to messaging (e.g., paging functions), the messaging cartridge "can be used in game playing." (Eck, 9:60-61.) An example of a gaming application is "Multiple User Dungeon (MUD) games" which are "Internet-based on-line exploration and quest games in which an open-ended number of players

simultaneously exist in the same game world, sharing experiences and adventures." (Eck, 10:2-7.) "[K]ey components" of such games include "exploration and adventure," "**chat and community interaction**," and "character growth and perpetual, dynamic worlds that grow, adapt and change." (Eck, 10:13-19.)

289. An exemplary MUD game described by Eck is "PagerWorld, a virtual community for the network of **all users having pager cartridges**." (Eck, 10:20-23.) Although Eck uses the word "PagerWorld" in the MUD title to reflect the communication means is paging, a POSITA would have understood that such a MUD is equally applicable when the communication means is another messaging type such as SMS or messaging via a WAP protocol. PagerWorld includes client software in the portable game machine (client program) and corresponding software in the server (server program). (*See* Eck, 4:61-5:7, 9:40-59.) As such, PagerWorld is persistent—it remains in existence after individual users exit the world. PagerWorld is therefore a "*previously established application-based information channel*" under the agreed upon construction in the Meta-MDT-IPR because it is a "computer program-based medium for transferring information" among members of the PagerWorld community.

290. A user "*identif[ies]*" PagerWorld through the "main PagerWorld screen 200," illustrated in Figure 7 (below-left), which is "the starting point for every user session." (Eck, 10:57-60.) Figure 8A is "an illustrative, but non-limiting,

implementation of the main screen 200." (Eck, 10:65-66.) The main screen presents the user's persona character, shown in Figure 8A as the character Mario, from the Mario Bros Nintendo game. (*See* Eck, 10:60-61.) The main screen also includes a set of icons including a book ("Pager Lingo"), an unopened envelope ("Message Center"), a globe ("PagerWorld"), and a face ("My Persona"). (Eck, 11:2-7.)

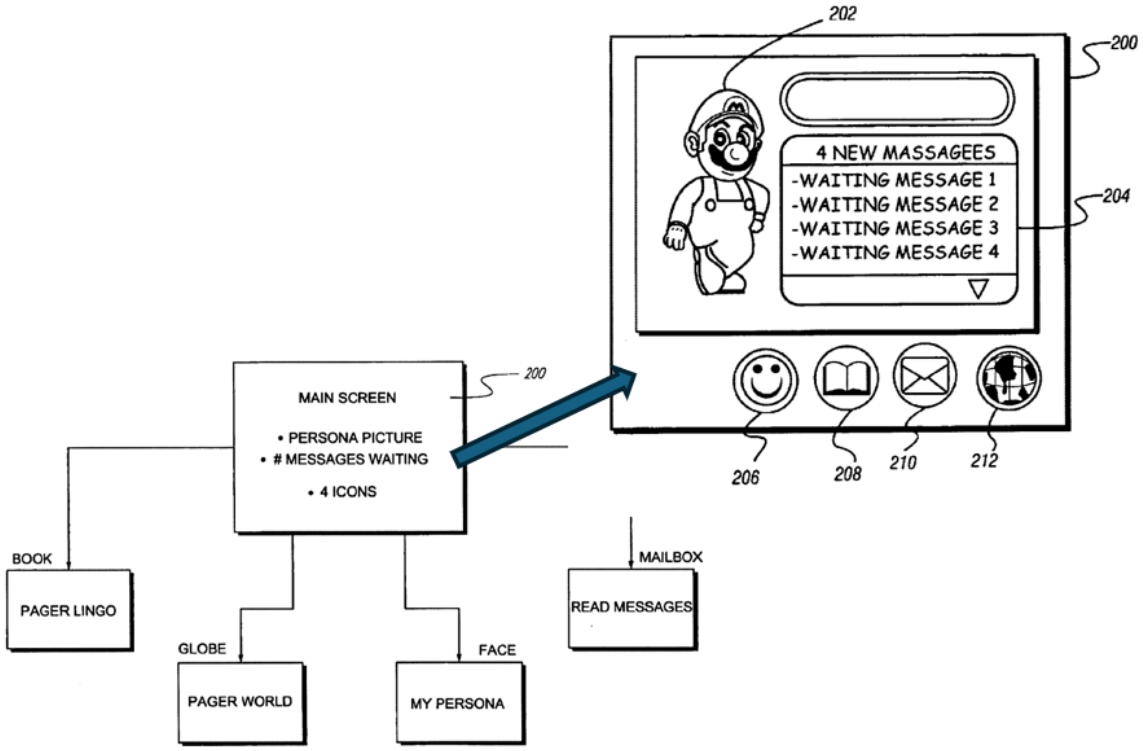

Eck, Figure 7 (left), Figure 8A (right)

291. PagerWorld "*permit[s] interaction between a user of the mobile device and one or more additional users*" of PagerWorld in a number of ways. First, players "read and send messages from the main PagerWorld screen" which serves as "'communication central.'" (Eck, 10:32-34.) Second, players can select the PagerWorld icon 212 portal from the main screen and "step into a nation-wide or

world-wide community of other PagerWorld players." (Eck, 10:34-36.) Within the shared world, users interact by exchanging messages. PagerWorld is a communications hub, "becoming a central meeting place to find friends and share messages." (Eck, 10:36-42.) For example, PagerWorld includes "The Hub" which is a place to "strike up a pen-pal communication," (Eck, 12:57-58), and "The Gaming Center" which "permits players to meet and play games, view high scores, etc.," (Eck, 12:62-63.) The PagerWorld on-line world also permits "unsolicited interventions" where players "playing the same game" send messages to each other "to disrupt game play" of another player. (Eck, 14:26-34.)

292. In the combination of Pelkey and Eck, the captured content (photos/images, sounds/audio files) "*is to be inserted*" into the "*previously established application-based information channel.*" PagerWorld supports transmission of messages "with images and sound bytes to other pagers in the network using, for example, a digital camera cartridge in combination with a pager cartridge." (Eck, 16:42-45, 24:30-36 ("the images stored in the read/write memory of digital camera cartridge 300 may be transmitted to other [sic] using the radio circuitry of pager cartridge 100"), 2:15-23 (inputs "cause the image captured by the digital camera to be transmitted as part of a message").) In addition to photos/images, the message can include sounds (audio file). (Eck, 20:12-14 (discussing messages containing "digital camera picture transmission (with/without sound)" and

"messages plus sound bites"), 21:47-48 ("Digital images can be exchanged and optionally supplemented by sound bites from a sound dictionary").)

293. Such a message can be sent through the Message Center accessed through an icon on the main screen. (Eck, 11:26-28.) While in the Message Center (e.g., screen illustrated in Figure 8C (below-left)), user activates the quill icon 236 to navigate to the "Compose Message screen 290" of Figure 8F. (Eck, 11:37-38.) The "send to" window 292 "allows the user to choose to whom the message will be sent." (Eck, 12:10-11.) A user can opt to send the message to an individual, to a pre-defined group (e.g., a buddy list), (Eck, 20:9), or as a broadcast to all messaging devices in PagerWorld, (Eck, 20:8, 9:46-49 ("messages from the paging system operator may be sent to all users in the paging system, to certain groups of users in the paging system or to a particular user in the paging system")). For group messaging, Pelkey teaches that the messaging service client "allows the user to create a list ('buddy list') of other users ('buddies') with whom he/she wishes to remain in contact." (Pelkey, 7:33-35.) The buddy list "is stored by the network server." (Pelkey, 7:35-36.) In the combination of Pelkey and Eck, the PagerWorld user can identify a "buddy list" in the "send to" window to send a "carbon copy" of the message.

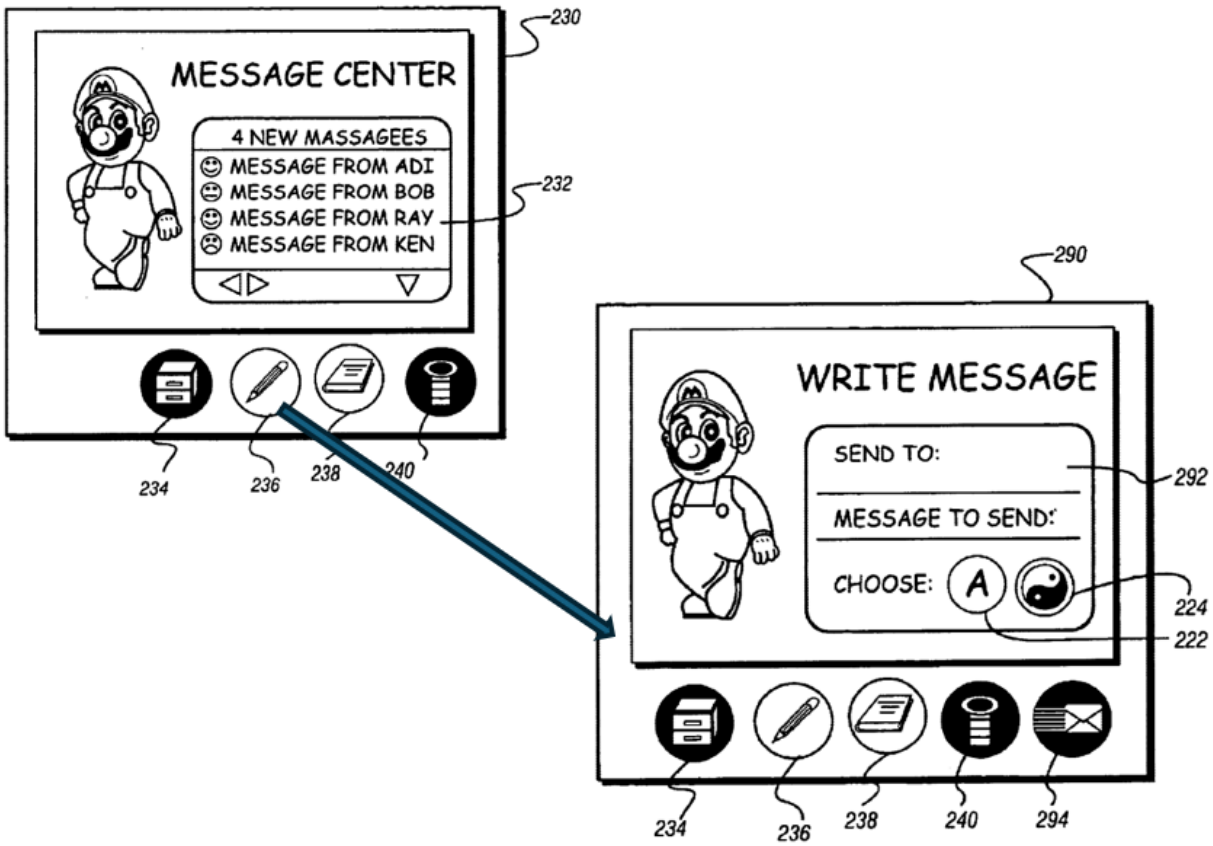

Eck, Figure 8C (left), Figure 8F (right)

294. PagerWorld includes a "Message Center" that "permits users, among other things, to read their messages and to compose and send new messages. The Message Center screen features a window **232** that lists unread messages." (Eck, 11:27-31.) "When a message is selected from Message Center screen, the contents of the message appear, along with the user's persona character and 'handle' of the person that sent the message." (Eck, 11:53-57; *see also* Eck. 12:36-38 ("Any time the user sends a message, his/her persona character appears alongside the message on the other user's screen.").)

295. PagerWorld also supports insertion of captured data into PagerWorld through personalization of a user's person character. Players in PagerWorld are represented "by a 'persona character' and it is this character that all other PagerWorld players will see." (Eck, 10:23-25.) As I discussed above, the user's persona is a feature element on the PagerWorld screens and "function[s] as a sort of 'pager' tour guide." (Eck, 10:62-64.) A user's persona is shared with other members of the PagerWorld community: "the contents of the message appear, along with the user's persona character and 'handle' of the person that sent the message." (Eck, 11:54-57.) The user's address book is a list of "other users by their handles" and next to the user's handle "is the persona character of the other user as it appeared on his/her last communication with the user." (Eck, 12:16-19.)

296. A user can customize their persona. The messaging service client (PagerWorld client program) "provides the user with an opportunity to create a user profile that is stored in memory of network server 14." (Pelkey, 7:9-11.) The users may be "provided with the capability of including in their profiles customized faces (images) made up of various user-selected features" or "digital images of their own faces" to "enhance the 'persona' of the user." (Pelkey, 7:20-27.) For example, in Eck, the "persona character" can be "customize[d] …. using image data obtained with a digital camera cartridge." (Eck, 12:38-40.) The persona character, is stored, in the combination at the network server. In addition to including the persona

character in messages, in the PagerWorld game universe, players "walk their persona characters in a world featuring attractions and sideshows." (Eck, 10:38-40, 13:29-31 (during game play "the player may control his/her persona character to fight, flee or use some item in the player's possession").) Thus, the image (persona) "*is to be inserted*" into PagerWorld for inclusion in the virtual world and message exchanged between players.

297. The combination of Pelkey and Eck therefore discloses "*identify[ing] a previously established application-based information channel into which the captured content is to be inserted, the identified application-based information channel permitting interaction between a user of the mobile device and one or more additional users*" [1B]/[18D].

(3) "Determining" Limitations [1C]/[18E]

[1C] determining information associated with at least one wireless networking functionality of the mobile device
[18E] determine information associated with at least one wireless networking functionality of the mobile device;

298. The parties in the Meta-MDT-IPR proposed constructions for the term "*wireless networking functionality of the mobile device*" as I discussed in Ground 1. The combination of Pelkey and Eck discloses this limitation under both constructions, as I discuss below.

299. The ’039 patent refers to “messaging, distributed collaboration, and location-based services” as examples of “wireless networking functionality.” (EX-1001, 1:41-43, 1:59-61.) Both Pelkey and Eck are directed to a messaging service provided using a portable game machine as I have discussed above. Pelkey discloses a network “in which the messaging service” may be implemented. (Pelkey, 2:58-60.) The network “includes game systems 10 connected via communications circuits 12 (e.g., modems, network interfaces, etc.) to a wide area network 16 such as the Internet.” (Pelkey, 2:60-62.) Pelkey explains that game system 10 may be a video game system, such as the N64 video game system, connected to a television. (*See* Pelkey, 3:38-48.) Game system 10 may also be the portable game machine 110. (Pelkey, 4:55-57.) I reproduced Pelkey’s Figure 1A below with the game system 10 on the left using the N64 game system illustrated in Pelkey’s Figure 2 and the game system 110 on the right using the portable game machine in Eck’s Figure 1B. I have also illustrated the connection from the N64 game system to the server via the Internet as taught by Pelkey.

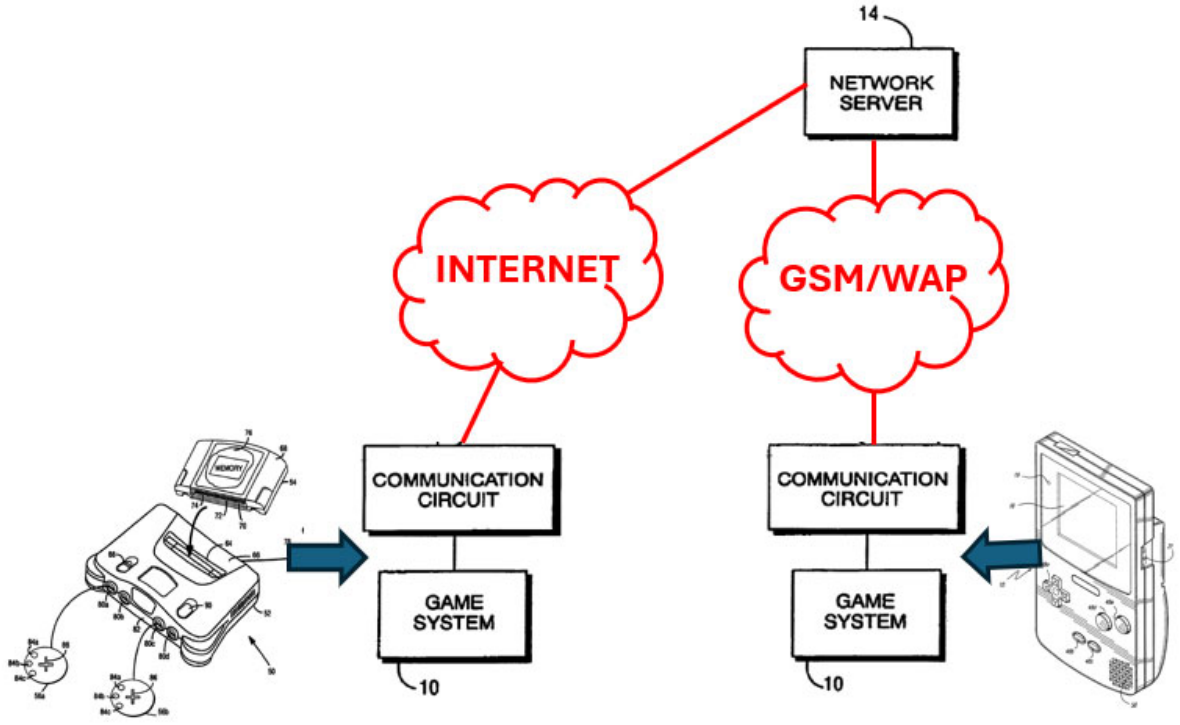

Pelkey, Figure 1

300. Pelkey does not disclose details of the wireless network used to provide wireless messaging from the game system to the server. However, while Eck mentions use of a paging network for this functionality, Eck also explicitly discloses that its "present invention" may be "applied to other wireless technologies such a GSM (Global System for Mobile Communications) and WAP (Wireless Application Protocol)." (Eck, 25:17-20.) A POSITA would have been motivated to use either GSM-SMS or WAP for the messaging service, rather than paging, to obtain the enhanced features of those protocols. Based on Eck's disclosure, a POSITA would

have understood that the portable game machine communicates with the server via messaging available via the GSM network (e.g., SMS) or messaging available via WAP.

301. GSM-SMS is "functionality implementable over a wireless network" and as shown in Pelkey's Figure 1, the GSM network is separate from the Internet connecting the N64 game system to the server. Thus, the combination of Pelkey and Eck discloses "*wireless networking functionality*" under both PO's and Meta's constructions from the Meta-MDT-IPR proceeding.

302. As I discussed in §IV.A.1, the WAP protocol stack transports data over GSM's SMS. I provided an overview of a mobile originated message in SMS in a GSM network in my analysis of this limitation in Ground 1. As discussed in that section, the SMS message includes a header with data fields indicating control and content details for the message. For the reasons I discussed in §IV.B.1.b.(3), these fields, associated with the action of sending a message over the wireless network, are "*information associated with at least one wireless networking functionality of the mobile device.*"

303. Thus, to send a message, the portable game machine "*determin[es]*" this information to construct the GSM-SMS message. Figure 8C from Eck confirms that this information is determined. Specifically, this figure depicts the Message Center user interface screen presented to the player which shows a list of unread

received messages with each message including the sending user's name and associated persona image.

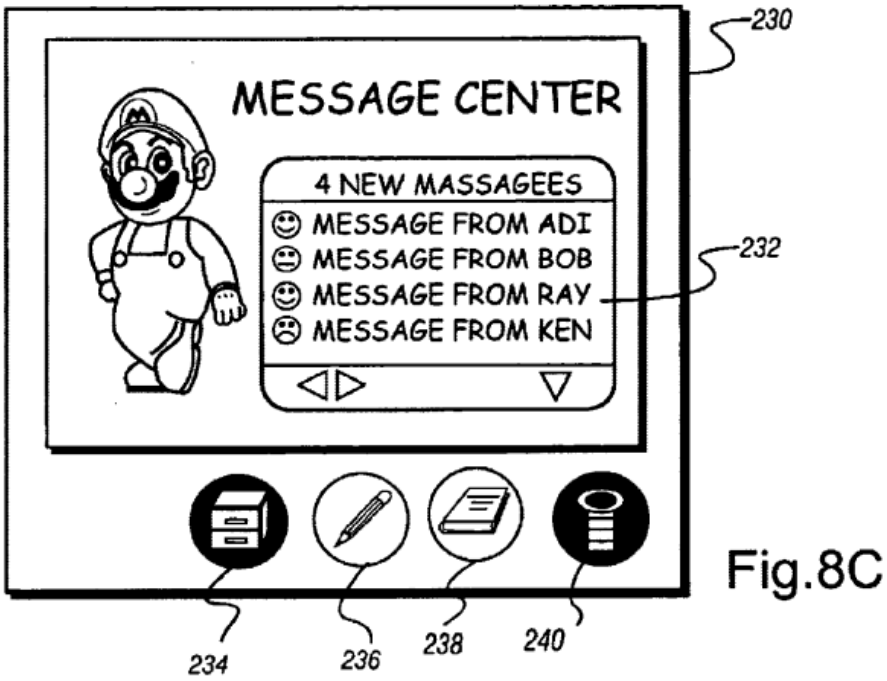

Fig.8C

Eck, Figure 8C

(4) "Providing" Limitations [1D]/[18F]

[1D] providing the captured content from the mobile device to at least one server for insertion in association with the determined information into the identified application-based information channel [18F] provide, via said at least one network interface, the captured content from the mobile device to at least one server for insertion in association with the determined information into the identified application-based information channel;

304. The combination of Pelkey and Eck discloses "*providing the captured content from the mobile device to at least one server.*" The network implementing the messaging service of Pelkey and Eck, illustrated in Pelkey's Figure 1A

(reproduced again below), includes the game system (e.g., portable game machine) coupled via a network to a **server**. (Pelkey, 2:58-3:4.) The network server "provides the messaging service." (Pelkey, 3:9-10.)

305. As I discussed in §V.B.1.d.(2), the portable game machine transmits messages "with images and sound bytes to other pagers in the network using, for example, a digital camera cartridge in combination with a pager cartridge." (Eck, 16:42-45, 24:30-36, 2:15-23.) As explained by Eck, this "image and sound data may be compressed/decompressed in accordance with well-known compression/decompression techniques to more effectively utilize the available bandwidth." (Eck, 16:45-48.) The message may further include the sending user's persona as I discussed in §V.B.1.d.(2). (*See* Eck, 11:53-57, 12:36-38 ("Any time the user sends a message, his/her persona character appears alongside the message on the other user's screen.").) Pelkey discloses that the server "suppl[ies] messages received from one logged-in player to another logged-in player." (Pelkey, 17:1-5.) The message is thus provided "*via said at least one network interface*" as shown in the Figure below. (*See, e.g.*, Eck. 2:15-18 ("a game machine is provided with radio circuitry configured to transmit messages").) This is consistent with Eck's use of GSM-SMS which requires a server to act as a message service centre for storing and forwarding messages from originators to recipients. (*See* §IV.B.1.b.(3).(a).) I

illustrate this message flow in Pelkey's Figure 1 below, showing a message from a portable game system being sent to the server.

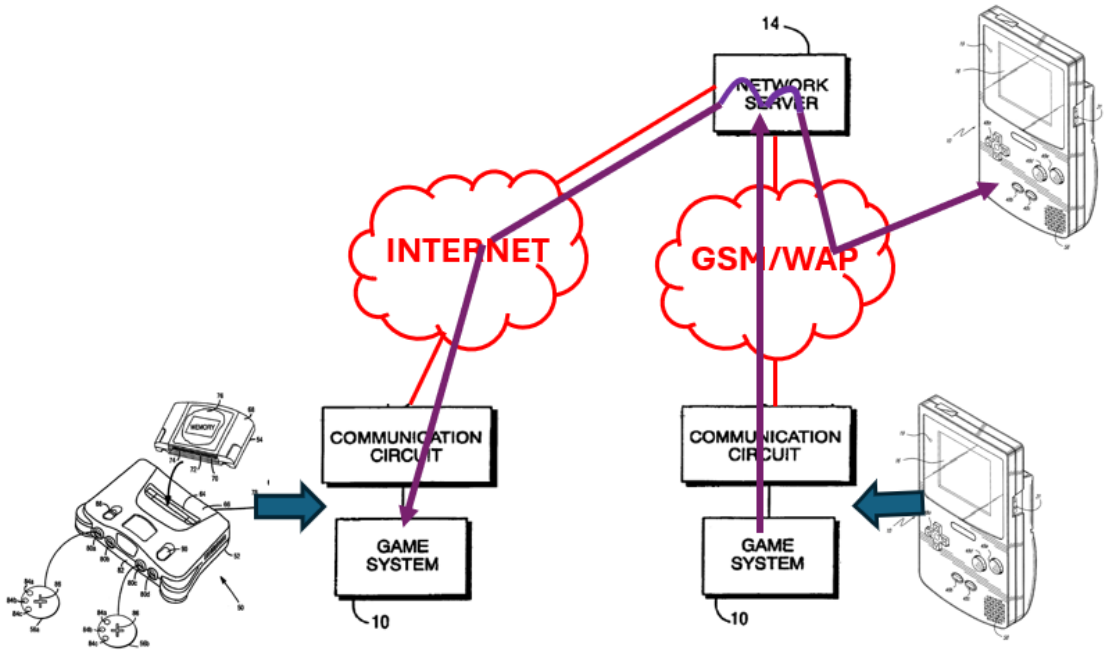

Pelkey, Figure 1A

306. As I discussed in §V.B.1.d.(2), a message "may be sent to all users in the paging system, to certain groups of users in the paging system or to a particular user in the paging system." (Eck, 9:46-49, 20:8-9.) As noted above, the server forwards the message received from the portable game device to the intended recipients (one or more (or all) messaging system users). The users of the messaging (paging) system are members of the PagerWorld community (i.e., "*the identified application-based information channel*"). Thus, the combination of Pelkey and Eck discloses "*provid[ing] the captured content from the mobile device* [portable game

machine] *to at least one server for insertion … into the identified application-based information channel.*"

307. The "*captured content*" is provided to the server "*for insertion with the determined information*" into the "*identified application-based information channel.*" The "*determined information*," (§V.B.1.d.(3)), includes the information provided in the GSM-SMS message header. When a message is forwarded to a recipient, the header information remains in the forwarded GSM-SMS message. This is again reflected in Eck's Figure 8C (below-left) and Figure 8D (below-right). Figure 8C provides a list of unopened message and "[s]electing a message takes the user to a Read Message screen" shown in Figure 8D. (Eck, 11:26-32.) As shown in this figure, the message received at the user's device includes the captured content and the determined information.

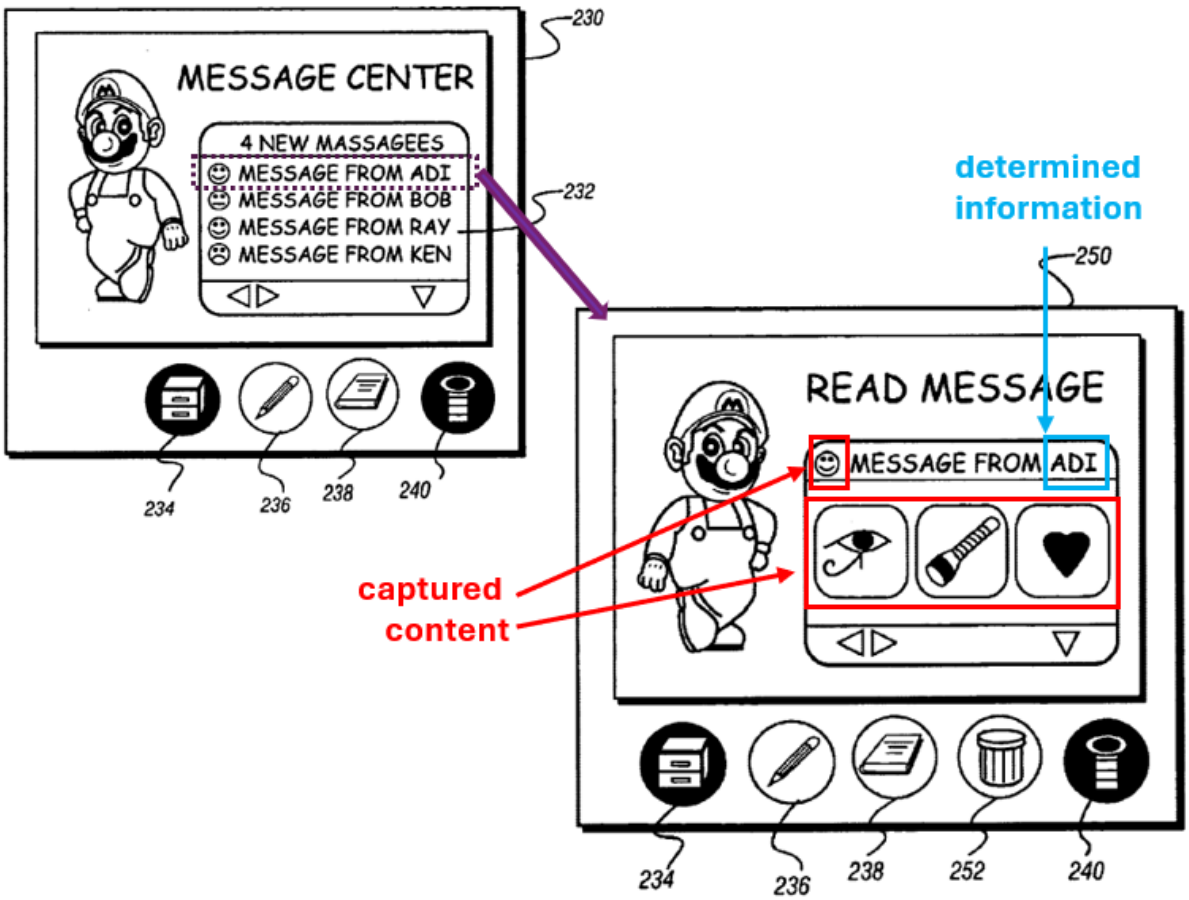

Eck, Figure 8C (left), Figure 8D (right)

308. Thus, the combination of Pelkey and Eck discloses "*provid[ing]/[e, via said at least one network interface,*] *the captured content from the mobile device to at least one server for insertion in association with the determined information into the identified application-based information channel*" [1D]/[18E].

(5) "Receiving" Limitations [1E]/[18G]

[1E] receiving other content, at the mobile device via the identified application-based information channel, from at least one of the additional users. [18G] receive other content, via the identified application-based information channel, from at least one of the additional users

309. This limitation adds nothing that was not already covered in the discussion of limitation [1D]. In the combination of Pelkey and Eck, limitation [1E] occurs when a second PagerWorld user uses its own device (either another portable game machine or a fixed N64 console) to send a message including a photo/image or sound clip. Upon such action, a user receives content, at the portable game machine via the identified application-based information channel, from at least one of the additional users when receiving a message containing the other user's customized persona avatar or accessing an address book listing other users along with their customized persona avatars. This is reflected in Figure 8C (reproduced below) which depicts content received from other users within PagerWorld ("*the identified application-based information channel*").

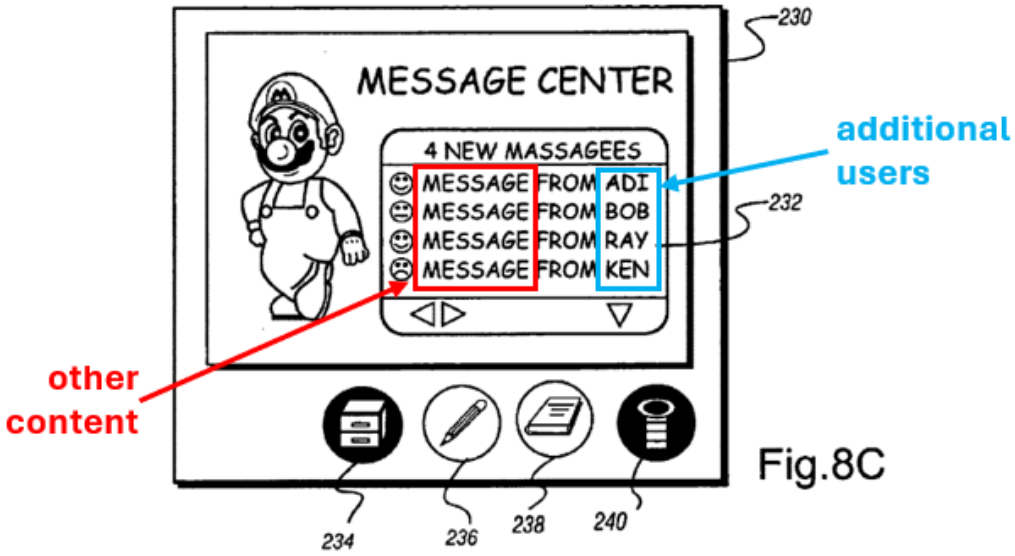

Eck, Figure 8C

310. Accordingly, the combination of Randall and Eck discloses "*receiving other content, at the mobile device via the identified application-based information channel, from at least one of the additional users*."

2. Server-Side Independent Claims 19 and 23

311. As I discussed in the analysis of the client-side claims, server-side independent claims 19 and 23 include substantially overlapping claim limitations. In the table below I provide a citation to the section discussing each limitation.

Claim 19	Claim 23	Section
[19P] A method comprising:		V.B.2.a
	[23P] A server comprising:	V.B.2.b
	[23A] at least one processing element comprising a processor coupled to a memory; and	V.B.2.c

Claim 19	Claim 23	Section
	[23B] at least one network interface;	V.B.2.c
	said at least one processing element being configured to:	V.B.2.d
[19A] receiving, at a server from a mobile device, content for insertion into a previously established application-based information channel, the previously established application-based information channel permitting interaction between a user of the mobile device and one or more additional users;	[23C] receive, from a mobile device, content for insertion into a previously established application-based information channel, the previously established application-based information channel permitting interaction between a user of the mobile device and one or more additional users;	V.B.2.d.(1)
[19B] receiving, at the server from the mobile device, information associated with at least one wireless networking functionality of the mobile device;	[23D] receive, from the mobile device, information associated with at least one wireless networking functionality of the mobile device;	V.B.2.d.(2)
[19C] integrating the content and the information associated with said at least one wireless networking functionality of the mobile device into the previously established application-based information channel; and	[23E] integrate the content and the information associated with said at least one wireless networking functionality of the mobile device into the previously established application-based information channel; and	V.B.2.d.(3)
[19D] inserting other content from at least one of the additional users into the previously established	[23F] insert other content from at least one of the additional users into the previously established application-based information channel.	V.B.2.d.(4)

Claim 19	Claim 23	Section
application-based information channel.		

a) Preamble [19P]: "method"

[19P] A method comprising:

312. The combination of Pelkey and Eck discloses a method for performing the actions recited in limitation [19A]-[19D] discussed in §§V.B.2.d.(1)-(4).

b) Preamble [23P]: "server"

[23P] A server comprising:

313. The combination of Pelkey and Eck discloses a "*server*" [23P]. As I discussed in §V.B.1.d.(4) in the discussion of limitations [1D]/[18E], the network implementing the messaging service of the combination includes a server. (*See, e.g.*, Pelkey, 2:58-3:10.)

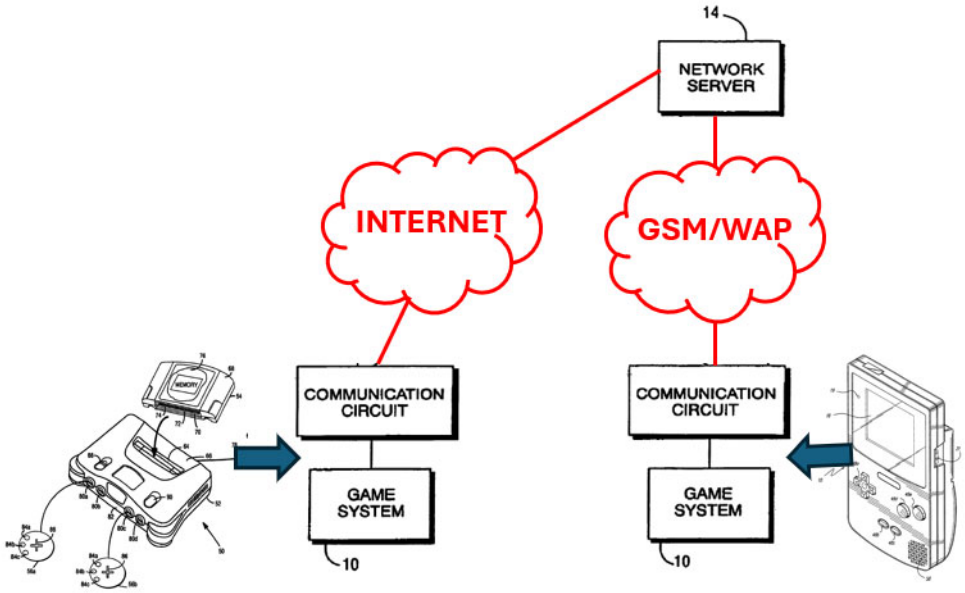

Pelkey, Figure 1A

c) Server Architecture Limitations [23A]-[23B]

[23A] at least one processing element comprising a processor coupled to a memory; and [23B] at least one network interface;

314. The combination of Pelkey and Eck discloses a server having "*processing element comprising a processor coupled to a memory*" and a "*network interface.*" Pelkey recites, in its claim 18, a "server process for a game network server embodied on a storage device and comprising instructions executable by a server processing system." (Pelkey, 16:44-46.) Thus, Pelkey discloses "*a processor* [processing system] *coupled to a memory* [storage device]." While Pelkey does not discuss this structure in the detailed description, a POSITA would have understood

that the hardware used for a server is a digital computing device such as a personal computer. Such a personal computer is the host 1201 shown in Pelkey's Figure 6B below. (*See* Pelkey, 12:43-45.) The host system includes a processing unit 1203, system memory 1205, and network interface 1156. Thus, the server also includes "*at least one network interface.*"

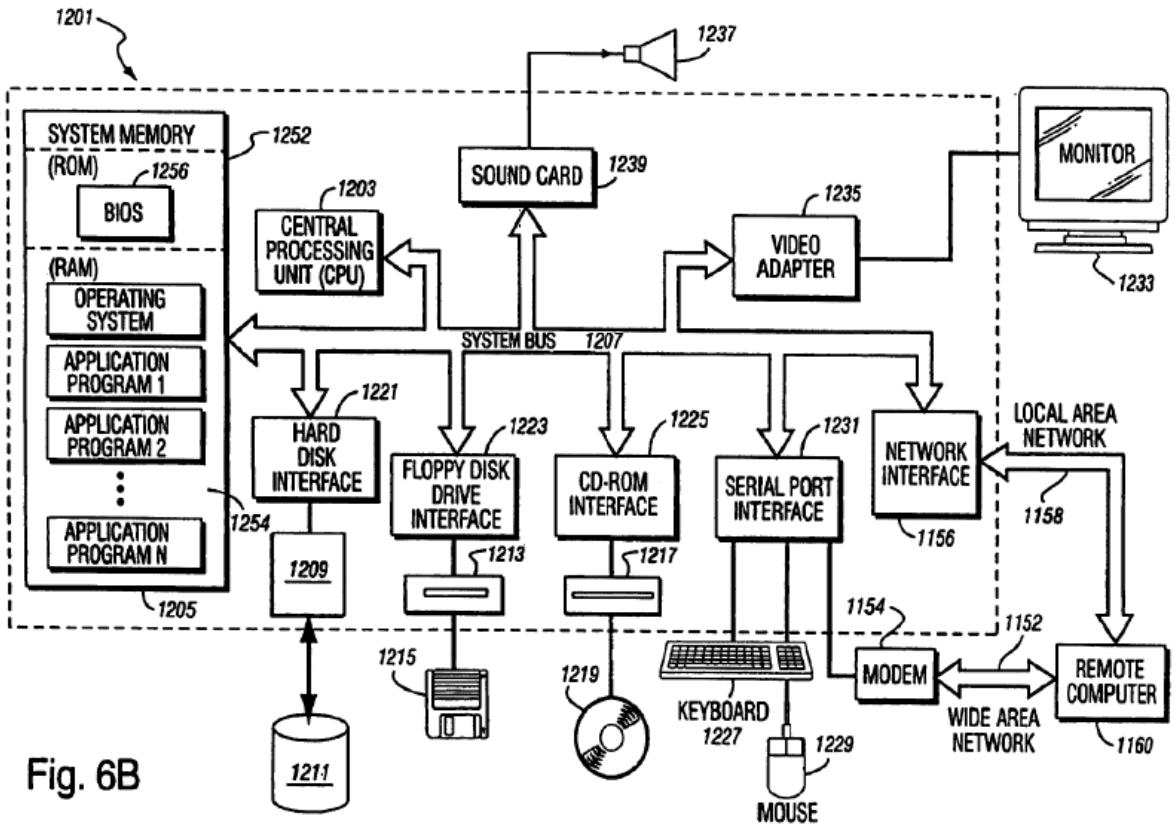

Pelkey, Figure 6B

d) Processing Limitations [19A]-[19D]/[23C]-[23F]

(1) "Receiv[ing]/[e]" Content Limitations [19A]/[23C]

[19A] receiving, at a server from a mobile device, content for insertion into a previously established application-based information channel, the previously established application-based information channel permitting interaction between a user of the mobile device and one or more additional users; [23C] receive, from a mobile device, content for insertion into a previously established application-based information channel, the previously established application-based information channel permitting interaction between a user of the mobile device and one or more additional users;

315. As I discussed in §V.B.1.d.(2) for limitations [1B] and [18D], Eck discloses a "*previously established application-based information channel permitting interaction between a user of the mobile device and one or more additional users*."

316. As I discussed in §V.B.1.d.(4) for limitations [1D] and [18E], Eck discloses "***providing the captured content from the mobile device to at least one server for insertion*** *in association with the determined information* ***into the identified application-based information channel***." That is, content for insertion into identified application-based information channel is transmitted from the mobile device to the server. The corollary is also true—"*content for insertion into a previously established application-based information channel*" is received "*at a server from a mobile device"* [19A]/[23C].

317. Thus, the combination of Pelkey and Eck discloses limitations [19A] and [23C].

(2) "Receiv[ing]/[e]" Information Limitations [19B]/[23D]

[19B] receiving, at the server from the mobile device, information associated with at least one wireless networking functionality of the mobile device;
[23D] receive, from the mobile device, information associated with at least one wireless networking functionality of the mobile device;

318. As I discussed in §V.B.1.d.(3) for limitations [1C] and [18E], Eck discloses "*determining information associated with at least one wireless networking functionality of the mobile device.*" And, as I discussed in §V.B.1.d.(4) for limitations [1D] and [18E], Eck discloses "***providing*** *the captured content* ***from the mobile device to at least one server*** *for insertion in association with* ***the determined information*** *into the identified application-based information channel.*" That is, the information associated with a wireless networking functionality is transmitted from the mobile device to the server. The corollary is also true for this limitation—the "*information associated with at least one wireless networking functionality of the mobile device*" is received "*at the server from the mobile device*" [19B]/[23D].

319. Thus, the combination of Pelkey and Eck discloses limitations [19B] and [23D].

(3) "Integrat[ing]/[e]" Limitations [19C]/[23E]

[19C] integrating the content and the information associated with said at least one wireless networking functionality of the mobile device into the previously established application-based information channel; and [23E] integrate the content and the information associated with said at least one wireless networking functionality of the mobile device into the previously established application-based information channel; and

320. As I discussed in §V.B.1.d.(4) for limitations [1D] and [18E], the combination of Pelkey and Eck discloses "*providing the captured content from the mobile device to at least one server for insertion in association with the determined information into the identified application-based information channel.*" That is, the content and the information associated with a wireless networking functionality are provided to the server so that they can be inserted into "*application-based information channel.*"

(4) "Insert[ing] Other Content" [19D]/[23F]

[19D] inserting other content from at least one of the additional users into the previously established application-based information channel; [23F] insert other content from at least one of the additional users into the previously established application-based information channel.

321. As I discussed in §V.B.1.d.(5) for limitations [1E] and [18G], the combination of Pelkey and Eck discloses that "*other content*" is received "*at the*

mobile device via the identified application-based information channel, from at least one of the additional users." For the same reasons, the combination of Pelkey and Eck discloses "*insert[ing] other content from at least one of the additional users into the previously established application-based information channel*" [19D]/[23F].

3. Claims 17: Client-Side "Computer-Readable Storage Medium"

17. A non-transitory computer-readable storage medium having embodied therein executable code of one or more software programs, wherein said executable program code when executed by a processing element of the mobile device causes the mobile device to perform the method of claim 1.

322. Eck explains that a cartridge including messaging functionality (e.g., a pager cartridge) "is provided for use with a game machine having a game program executing processing system including a microprocessor." (Eck, 1:60-65.) The messaging cartridge "includes a memory 145 for storing software used in the pager operations." (Eck, 7:7-9.) Pelkey similarly discloses "[a] messaging service client is implemented by program code contained in an application (e.g., a video game, a web browser) executed by the game system." (Pelkey, 1:42-44.)

323. As I discussed in §V.B.1.c, the inserted messaging cartridge includes ROM 42 which "contain[s] instructions" pertaining to, e.g., the messaging function. (*See, e.g.*, Eck, 4:5-6, 7:7-12 ("[p]ager cartridge 100 includes a memory 145 for storing software used in the pager operations … [i]t is of course possible to store the software for implementing at least some of these operations in the memory of game

machine 10”).) When inserted, the “game machine circuitry [] access[es] information contained with ROM 42 (and read/write memory 46), which information controls the game machine … under control of the ROM game program information.” (Eck, 4:9-20.) The game machine 10 then “automatically activates a display of messages on the display thereof in accordance with the operating software stored in the memory of the pager.” (Eck, 22:10-14.)

324. Therefore, the combination of Pelkey and Eck discloses “*non-transitory computer-readable storage medium having embodied therein executable code of one or more software programs, wherein said executable program code when executed by a processing element of the mobile device causes the mobile device to perform the method of claim 1*.”

4. Claim 22: Server “Computer-Readable Storage Medium”

22. A non-transitory computer-readable storage medium having embodied therein executable code of one or more software programs, wherein said executable program code when executed by a processing element of the server causes the server to perform the method of claim 19.

325. Pelkey discloses that the server includes a storage medium storing executable code that when executed performs the server-side actions of the messaging service. Specifically, Pelkey discloses, in its claim 18, a “server process for a game network server embodied on a storage device and comprising instructions

executable by the server processing system" for providing steps of a messaging service method. (*See* Pelkey, 16:44-18:8.)

326. Thus, the combination of Pelkey and Eck discloses a "*non-transitory computer-readable storage medium having embodied therein executable code of one or more software programs, wherein said executable program code when executed by a processing element of the server causes the server to perform the method of claim 19*."

C. Claims 2 and 29: "personalized content application"

> 2. The method of claim 1 wherein the identified application-based information channel comprises a personalized content application.
>
> 29. The method of claim 1 wherein the application-based information channel is accessible via a personalized content application particularly configured to run on the mobile device.

327. The combination of Pelkey and Eck discloses these limitation because PagerWorld, i.e., the "*application-based information channel*" discussed above in connection with claim 1, is a "*personalized content application.*" By allowing a user to access personalized content, PagerWorld "*comprises a personalized content application.*" For example, Eck discloses "[t]he Newscenter—This building permits a player to view news from the Service provider and to customize the amount and/or type of news downloaded to the pager cartridge by the System operator for example, each night." (Eck, 12:52-56.)

328. Both Pelkey and Eck disclose that the user may personalize its messaging (e.g., PagerWorld) account. For example, Pelkey teaches that the "messaging service client provides the user with an opportunity to create a user profile." (Pelkey, 7:9-11.) The user can specify, e.g., the user's alias, "favorite game, favorite food, favorite sport, [and] hobbies." (Pelkey, 7:12-16.) Users are also provided with the capability of customizing their persona. (Pelkey, 7:20-30.) Eck explains that a Player's "persona character" is the character all other PagerWorld players will see, for example when messages are received." (Eck, 10:20-31, 12:20-23 ("user may customize his/her persona character to his/her liking" via PagerWorld's "My Persona" screen).)

329. As I discussed in §V.B.3 for claim 17, the "*application-based information channel ... is configured to run on the mobile device.*" Because the "*personalized content application*" contains the "*application-based information channel*," it is also "*configured to run on the mobile device.*"

D. Claim 3: Collaborative Workspace

3. The method of claim 1 wherein the identified application-based information channel comprises a collaborative workspace.

330. PagerWorld "*comprises a collaborative workspace*," as claimed because these features allow Forum group members to communicate and collaborate on topics of interest, *e.g.*, by allowing each group member to post or send messages and/or photos, and respond to the messages and/or photos posted or sent by other

group members. For example, Eck discloses that "[a]s players interact with other players in PagerWorld (e.g., by sending messages and playing games), players will share the fun and excitement of discovering new items, skills and appearances as their persona characters gain experience." (Eck, 10:27-31.)

331. In addition, among the types of games that can be played in PagerWorld are "[t]eamwork-based adventures requiring input from multiple players with complementary skills." (Eck, 13:40-45.) For example, a user can solicit an intervention from another user by sending a message "requesting help from a friend playing the same game. A player could, for example, request a ladder to climb a wall to gain a prize or level or request more ammunition to fight enemies." (Eck, 14:11-26.)

332. Accordingly, the combination of Pelkey and Eck discloses "*identified application-based information channel* [PagerWorld] *comprises a collaborative workspace*."

E. Claim 4: "Chat Channel"

4. The method of claim 1 wherein the identified application-based information channel comprises a chat channel.

333. The combination of Pelkey and Eck discloses "*the identified application-based information channel comprises a chat channel.*" Eck discloses that multiple user games, such as PagerWorld, include the feature of "Chat and community interaction." (Eck, 10:15-19, *see also* Eck, 16:55-63, Figs. 11A-B

(disclosing chat codes to "reduce[] the number of characters in a message, thereby reducing message charges").) Pelkey similarly discloses that the server "set[s] up text-based chat sessions between two or more logged-in players." (Pelkey, 17:6-10.)

334. Eck also discloses that "PagerWorld is the hub for communications, becoming a central meeting place to find friends and share messages." (Eck, 10:36-38.) One feature provided within PagerWorld is the ability to "view message boards." (Eck, 10:40-42.) A POSITA would have understood that message boards provide another avenue for members of the PagerWorld community to chat.

335. Accordingly, the combination of Pelkey and Eck discloses that "*the identified application-based information channel comprises a chat channel*."

F. Claims 8-9: "Wireless Networking Functionality" Claims

336. Independent claim 1 recites "*determining information associated with at least one wireless networking functionality of the mobile device*" [1C]. Claims 8-9 further narrow this limitation by specifying what "*the information*" comprises. The combination of Randall and Forsyth discloses each of these claims.

337. Claim 8, reproduced below, recites that the information determined in limitation [1C] "*specif[ies] at least one messaging action implementable over said at least one wireless network.*" I discussed these limitations in my analysis of limitation [1C]. (§V.B.1.d.(3).) For the reasons discussed in that section and the reasons discussed below, the combination of Pelkey and Eck discloses claim 8. And

the combination of Randall and Forsyth likewise discloses a "wireless network" under any proposed construction for the same reasons it discloses "wireless networking functionality" under either Patent Owner's or Meta's proposed construction.

> 8. The method of claim 1 wherein the information associated with said at least one wireless networking functionality of the mobile device comprises information specifying at least one messaging action implementable over said at least one wireless network.

338. As set forth in the "Background and Summary of the Invention," "a game machine is provided with radio circuitry configured to transmit and receive messages via a paging system." (Eck, 2:23-27.) Likewise, the disclosed "Field of the Invention" is "a portable game machine and, more particularly, [] a portable game machine that is selectively configurable for one or more different operations such as wireless communications, global positioning, image capturing and combinations thereof." (Eck, 1:10-16.) "FIG. 5A is a generalized block diagram of one example pager cartridge 100. Pager cartridge 100 includes an antenna 130 connected to a conventional radio section 132 for receiving and sending messages." (Eck, 6:33-36; *see also* Eck, 8:4-6 ("Transmitter transmits messages via antenna and receiver receives messages via antenna."), Fig. 5B.)

339. A POSITA would thus understand Eck discloses messaging actions implementable over a wireless network. For example, Eck discloses that the communication circuit for the pager cartridge "may be configured for wired or

wireless communication in accordance with any conventional communication protocol." (Eck, 28:57-59.)

340. Claim 9, reproduced below, recites that the information determined in limitation [1C] "*specif[ies] at least one collaboration action implementable over said at least one wireless network.*" I discussed these limitations in my analysis of limitation [1C]. For the reasons discussed in that section (§V.B.1.d.(3)), the combination of Randall and Forsyth discloses claim 9.

> 9. The method of claim 1 wherein the information associated with said at least one wireless networking functionality of the mobile device comprises information specifying at least one collaboration action implementable over said at least one wireless network.

G. Claim 13: Specific Captured Content

> 13. The method of claim 1 wherein the captured content is obtained from a device-captured data source of the mobile device, the device-captured data source comprising a source of at least one of device-captured video data, device-captured image data, device-captured audio data and device-captured location coordinates.

341. As discussed above with respect to claim 1, the combination of Pelkey and Eck discloses "*wherein the captured content is obtained from a device-captured data source of the mobile device*." Eck discloses that the "*device captured data source*" comprises a source of at least "*device-captured image data*" and "*device-captured audio data*." For example, as discussed above in connection with claim 1[A], Eck discloses "[s]imilarly, in the case in which a digital camera cartridge is 'piggy-backed' to game machine 10 via pager cartridge 100, digital images may be

captured by the camera and used by game machine 10 and/or transmitted as a message using pager cartridge 100. If the digital camera cartridge is configured to capture sounds, these captured sounds may be used by game machine 10 and/or transmitted as a message using pager cartridge 100." (Eck, 9:16-25.)

H. Claims 14 and 15: Specific Mobile Devices

> 14. The method of claim 1 wherein the mobile device comprises at least one of a mobile telephone, a tablet computer and a camera.
>
> 15. The method of claim 1 wherein the mobile device comprises a global positioning system (GPS)-based navigational device.

342. The combination of Pelkey and Eck discloses that the "*mobile device*" is a "*camera*." Specifically, Eck discloses that "[i]f digital camera cartridge 300 is piggy-backed into a pager cartridge 100, the images stored in the read/write memory of digital camera cartridge 300 may be transmitted to other using the radio circuitry of pager cartridge 100 in response to some other predetermined input to game machine 10 via some other combination of one or more of operating keys 48a-48e." (Eck, 24:30-36.) That is, the portable game machine operates as "*camera.*"

343. The combination of Pelkey and Eck also discloses that the "*mobile device comprises a global positioning system (GPS)-based navigational device*." Eck discloses that "a global positioning system (GPS) cartridge is also selectively insertable into the slot of game machine 10 or into the slot of pager cartridge 100." (Eck, 22:28-30, 5:39-43.) Eck explains that "GPS is a satellite-based radio

navigation system developed and operated by the U.S. Department of Defense (DOD) and permits users to determine their three-dimensional position velocity, and time." (Eck, 22:30-34.) The GPS cartridge "is provided for use with a game machine having a game program executing processing system including a microprocessor to execute a video game program and player controls operable by a player to generate video game control signals." (Eck, 2:3-8.)

344. Eck discloses that GPS capability, the ability to send and receive messages (pages), and the ability to send and receive photos and audio files can be integrated into the portable gaming system without the need for cartridges. (Eck, 25:35-40 ("In addition, while the pager cartridge, GPS cartridge, and digital camera cartridge are shown as add-on devices to an existing game machine, it is possible to incorporate some or all of the circuitry needed to implement the above-described operations in the game machine itself (portable or otherwise).").)

I. Claims 24 and 25: "Integrated Content" Claims

24. The method of claim 1 further comprising accessing integrated content at the mobile device via the identified application-based information channel, the integrated content comprising a combination of at least a portion of the captured content and at least a portion of the determined information. 25. The method of claim 1 wherein integrated content is stored by the at least one server, the integrated content comprising a combination of at least a portion of the captured content and at least a portion of the determined information.

345. As explained above with respect to claim limitations [1D] and [1E], the combination of Pelkey and Eck discloses "*providing the captured content from the mobile device to at least one server for insertion in association with the determined information into the identified application-based information channel*" and "*receiving other content, at the mobile device via the application-based information channel*." (§§V.B.1.d.(4)-(5).) For these same reasons, the combination of Pelkey and Eck discloses that "*accessing integrated content at the mobile device via the identified application-based information channel, the integrated content comprising a combination of a least a portion of the captured content and at least a portion of the determined information*" is "*stored by the at least one server*," recited in claim 24.

346. As explained above with respect to limitation [1D], the combination of Pelkey and Eck discloses "*providing the captured content from the mobile device to at least one server for insertion in association with the determined information into the identified application-based information channel*." (§V.B.1.d.(4).) For these same reasons, the combination of Pelkey and Eck discloses that "*integrated content comprising a combination of a least a portion of the captured content and at least a portion of the determined information*" is "*stored by the at least one server*."

J. Claim 28—Channel "Accessible Via a Mobile Website"

28. The method of claim 1 wherein the application-based information channel is accessible via a mobile website previously established for the user of the mobile device.

347. Pelkey teaches that a "messaging system includes a web server computer and at least two video game systems." (Pelkey, Abstract.) For example, the fixed game system (N64 system) "is configured to connect to the web server computer via the Internet." (Pelkey, Abstract.) Eck discloses the use of WAP for messaging via the portable game machine, as I discussed above. WAP makes it possible to access the Internet via wireless devices. The figure below illustrates a WAP-enabled client accessing a web server through a WAP gateway. In the combination of Pelkey and Eck, the messaging server is a mobile website accessible via the WAP gateway.

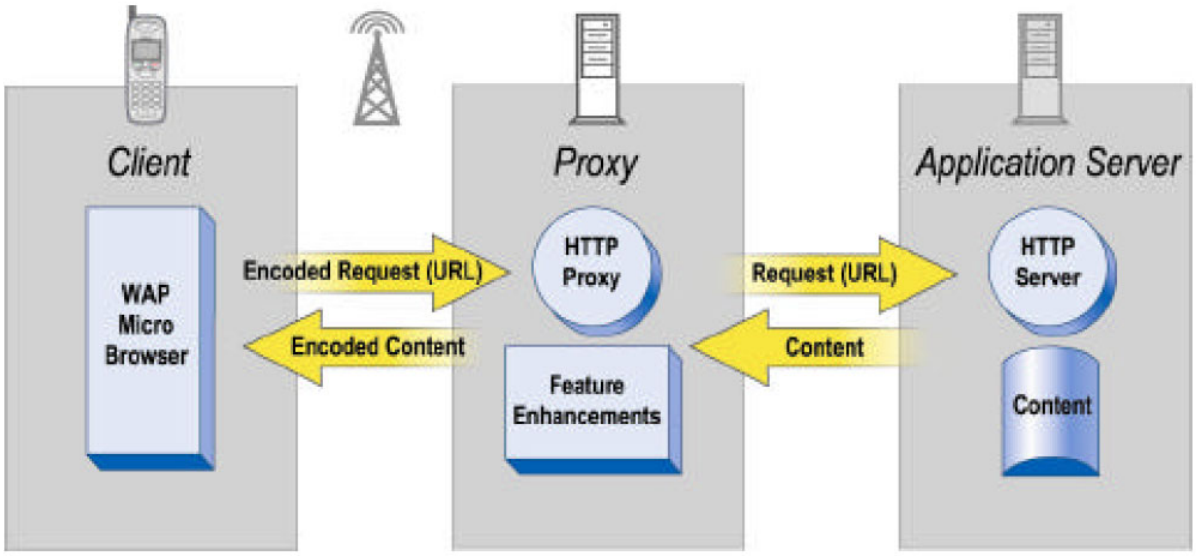

WAP Architecture, Figure 3

K. Claim 30—Other Content

30. The method of claim 1 wherein the other content comprises at least one message relating to the captured content that is received at said at least one server and inserted by said at least one server into the application-based information channel.

348. The combination of Pelkey and Eck discloses "*the other content comprises at least one message relating to the captured content that is received at said at least one server and inserted by said at least one server into the application-based information channel*." When a user sends a message, their persona character is part of the message. (*See, e.g.*, Eck, 10:23-26 ("Players are represented in PagerWorld by a 'persona character' and it is this character that all other PagerWorld players will see, for example when messages are received."), 11:53-57 ("When a message is selected from Message Center screen, the contents of the message appear, along with the user's persona character and "handle" of the person that sent the message.").)

VI. Conclusion

349. In signing this declaration, I recognize that the declaration will be filed as evidence in a contested case before the Patent Trial and Appeal Board of the United States Patent and Trademark Office. I also recognize that I may be subject to cross-examination in the case and that cross-examination will take place within the United States. If cross-examination is required of me, I will appear for cross-examination within the United States during the time allotted for cross-examination.

Dated: January 31, 2025

Respectfully submitted,

Henry H. Houh.

Henry Houh, Ph.D.

APPENDIX

Exh.	Reference
1001	U.S. Patent 9,032,039 to Harper, et al. ("the '039 patent")
1002	File History for U.S. Patent 9,032,039
1005	WO 02/17652 to Randall, et al. ("Randall")
1006	U.S. Patent 7,047,030 to Forsyth ("Forsyth")
1007	U.S. Patent 7,056,217 to Pelkey, et al. ("Pelkey")
1008	U.S. Patent 6,716,103 to Eck, et al. ("Eck")
1009	Joint Claim Construction Statement from *Mobile Data Techs. LLC v. Meta Platforms, Inc.,* No. 7:22-cv-00244-ADA-DTG (E.D. Tex.)
1010	Patent Owner's Response to Petition (Paper 26) from *Mobile Data Techs. LLC v. Meta Platforms, Inc.,* IPR2024-00248
1011	Petitioner's Reply (Paper 33) from *Mobile Data Techs. LLC v. Meta Platforms, Inc.,* IPR2024-00248
1012	"Wireless Java for Symbian Devices" by Allin (September 2001) ("Allin")
1013	WAP Architecture (Version 12): "Wireless Application Protocol Architecture Specification, WAP-210-WAPArch-20010712" (July 12, 2001) ("WAP Architecture")
1014	Wireless Datagram Protocol (Version 14): "Open Mobile Alliance, WAP-259-WDP-20010614-a" (June 14, 2001) ("WDP")
1015	ETSI TS 123 040—Digital cellular telecommunications system (Phase 2+) (GSM); Universal Mobile Telecommunications System (UMTS); Technical realization of the Short Message Service (SMS) (3GPP TS 23.040 version 3.6.0) (September 2001) ("GSM SMS Standard")

Exh.	Reference
1016	"Symbian OS Communications Programming" by Michael J. Jipping (June 2002) ("Jipping")
1017	"Symbian Home Page," (January 24, 2002), https://web.archive.org/web/20020124070457/http://www.symbian.com:80/
1018	"Symbian: OS Technology," (February 2, 2002), https://web.archive.org/web/20020202090443/http://www.symbian.com/technology/technology.html
1019	"Symbian: OS Technology – Symbian OS phones and PDAs," (February 2, 2002) https://web.archive.org/web/20020202133445/http://www.symbian.com/technology/symbos-phones.html
1020	U.S. Patent 6,947,396 to Salmi ("Salmi")
1021	U.S. Patent 7,031,718 to Jouppi, et al. ("Jouppi")
1022	U.S. Patent 7,092,495 to Kraft, et al. ("Kraft")
1023	U.S. Patent 6,788,949 to Bansal ("Bansal")
1024	U.S. Patent 7,802,207 to Agboatwalla, et al. ("Agboatwalla")
1025	U.S. Patent 7,574,486 to Cheng, et al. ("Cheng")
1026	"Operating System Concepts (Fourth Edition) by Silberschatz et al. (January 1994) ("Silberschatz")
1027	U.S. Patent 6,937,588 to Park ("Park")
1028	Excerpt from Webster's Dictionary of Computer Terms (page 98)