US006434403B1

(12) **United States Patent**
Ausems et al.

(10) **Patent No.: US 6,434,403 B1**
(45) **Date of Patent: Aug. 13, 2002**

(54) **PERSONAL DIGITAL ASSISTANT WITH WIRELESS TELEPHONE**

(75) Inventors: **Michiel R. Ausems**, Charlotte, NC (US); **Jan B. Ausems**, BN Den Haag; **Felix N. Akveld**, VL Houten, both of (NL); **Lee Ann Barrett**, San Mateo, CA (US)

(73) Assignee: **Bodycom, Inc.**, Wilmington, DE (US)

(*) Notice: Subject to any disclaimer, the term of this patent is extended or adjusted under 35 U.S.C. 154(b) by 0 days.

(21) Appl. No.: **09/253,304**

(22) Filed: **Feb. 19, 1999**

(51) **Int. Cl.**[7] **H04B 1/38**

(52) **U.S. Cl.** **455/556**; 455/569; 455/575

(58) **Field of Search** 455/556, 557, 455/569–575, 90; 248/289.1, 291, 923; 395/2.4; 707/3; 361/610; 364/705.05; 368/10; 379/428, 432, 433

(56) **References Cited**

U.S. PATENT DOCUMENTS

4,959,850 A		9/1990	Marui	379/58
5,100,098 A	*	3/1992	Hawkins	248/917
5,331,138 A		7/1994	Saroya	235/449
5,389,934 A		2/1995	Kass	342/357
5,491,507 A	*	2/1996	Umezawa et al.	348/14
5,497,339 A	*	3/1996	Bernard	364/705.05
5,522,089 A		5/1996	Kikinis et al.	395/893
5,524,101 A	*	6/1996	Thorgersen et al.	368/10
5,524,169 A	*	6/1996	Cohen et al.	395/2.4
5,537,472 A	*	7/1996	Estevez-Alcolado et al.	379/433
5,555,157 A	*	9/1996	Moller et al.	361/683
5,682,418 A	*	10/1997	Ide	379/58
5,715,524 A		2/1998	Jambhekar et al.	455/90
5,748,737 A	*	5/1998	Daggar	380/24
5,749,072 A	*	5/1998	Mazurkiewicz et al.	704/275
5,778,256 A		7/1998	Darbee	395/892
5,787,406 A		7/1998	Arsenault et al.	705/410

(List continued on next page.)

FOREIGN PATENT DOCUMENTS

AT	0933733 A2	*	4/1999	G07F/7/10
AT	0986230 A2	*	3/2000	H04L/29/06
AU	WO9535534 A	*	12/1995	G06F/3/02
DE	0718780 A1	*	6/1996	G06F/15/02

OTHER PUBLICATIONS

Katie Hafner, "Web Phone: The Next Big Thing?", New York Times, Apr. 15, 1999, p. D1 and D7.

Michael Kanellos and Jim Davis, "Qualcomm Merges Phones, Handheld", News.com, Sep. 21, 1998.

Mathew Rose, "Who Wins With the Latest "Smart" Phones and Pagers—R&D Teams or Consumers?", The Wall Street Journal Interactive Edition, Sep. 7, 1998.

Primary Examiner—Daniel Hunter
Assistant Examiner—C. Chow
(74) *Attorney, Agent, or Firm*—Blakely Sokoloff Taylor & Zafman LLP

(57) **ABSTRACT**

A wireless telephone engine, smart-card engine and Personal Digital Assistant (PDA) engine are integrated in a single device, wherein an address book is shared by the wireless telephone engine and PDA engine. An associated display unit including a touch screen is coupled to the PDA. The smart-card engine is configured to communicate with external devices via a short-range transceiver. Additionally, the PDA engine is configured to automatically balance an electronic account ledger based upon point of sale transactions, and control a remote device by transmitting signals to the device via the short-wave transceiver and/or the wireless telephone engine. The PDA engine is also configured to receive signals from the remote device regarding the status of the remote device. Further, the PDA engine is configured to exchange data with a remote computer via the wireless telephone engine. The exchanged data includes information stored within the PDA engine and the address book.

23 Claims, 9 Drawing Sheets

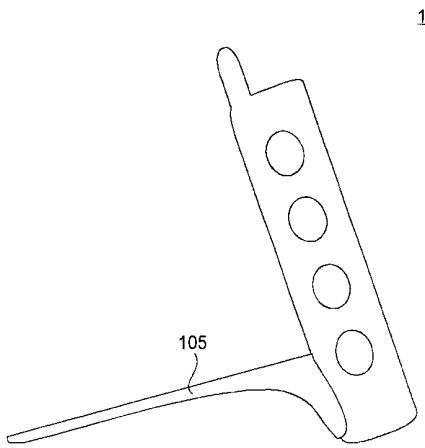

U.S. PATENT DOCUMENTS

5,790,659 A * 8/1998 Strand 379/433
5,797,089 A * 8/1998 Nguyen 455/403
5,841,119 A * 11/1998 Rouyrre et al. 235/380
5,845,282 A 12/1998 Alley et al. 707/10
5,859,973 A 1/1999 Carpenter et al. 395/200.33
5,884,156 A * 3/1999 Gordon 455/350
5,956,656 A * 9/1999 Yamazaki 455/575
5,983,073 A * 11/1999 Ditzik 455/11.1
6,024,593 A * 2/2000 Hyland 439/326
6,026,375 A * 2/2000 Hall et al. 705/26
6,034,866 A * 3/2000 Nobuchi et al. 361/681
6,049,796 A * 4/2000 Siitonen et al. 707/3
6,115,601 A * 9/2000 Ferreira 455/406
6,128,514 A * 10/2000 Griffith et al. 455/564
6,133,853 A * 10/2000 Obradovich et al. 340/905
6,141,540 A * 10/2000 Richards et al. 455/90
6,167,255 A * 12/2000 Kennedy, III et al. 455/414
6,178,085 B1 * 1/2001 Leung 361/683
6,215,474 B1 * 4/2001 Shah 345/168

* cited by examiner

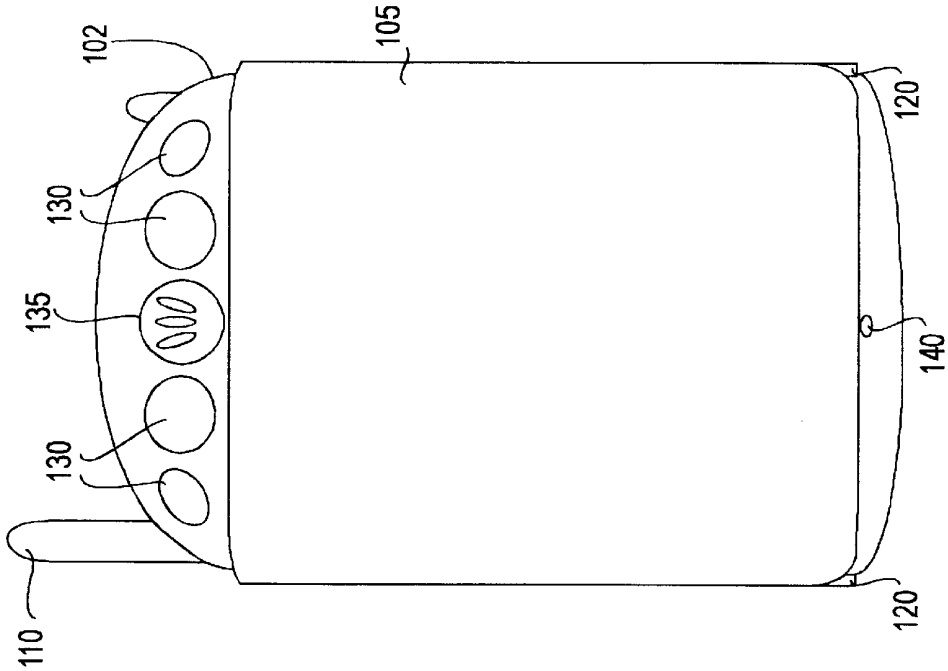

Fig. 1b

100

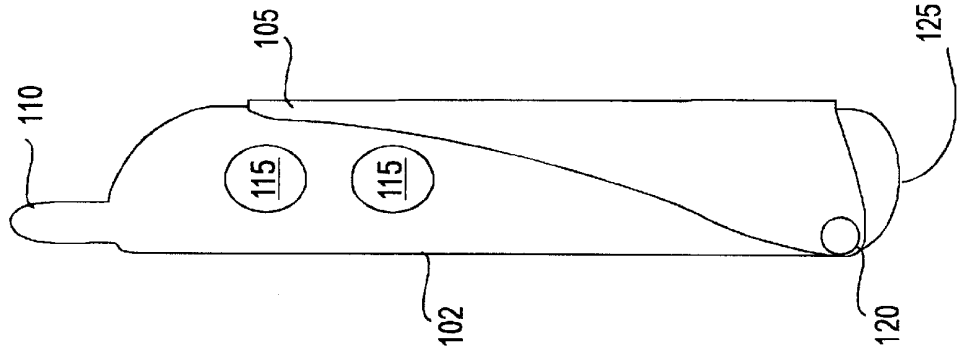

Fig. 1a

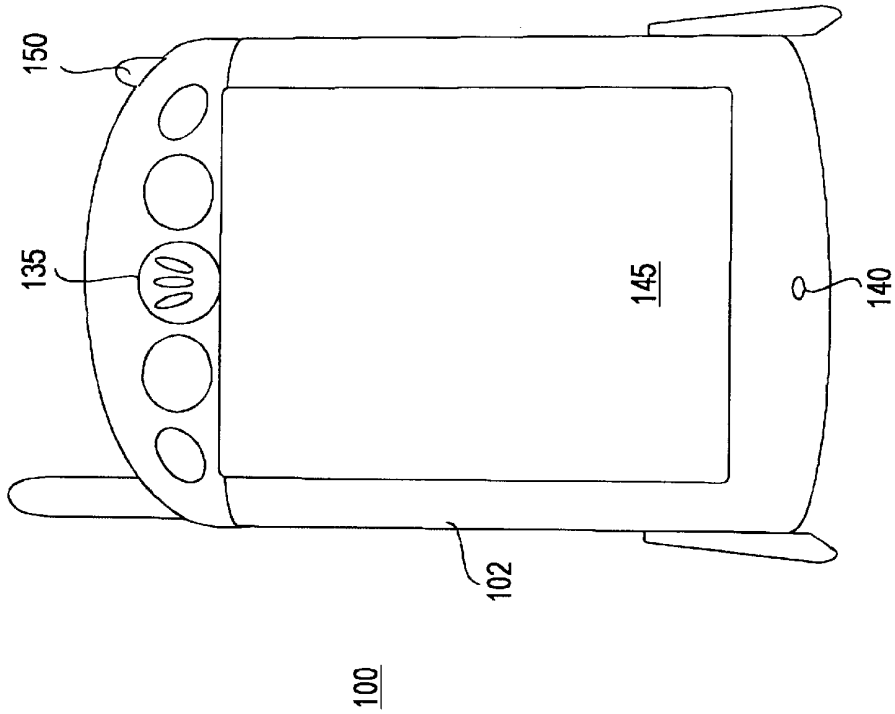

Fig. 1d

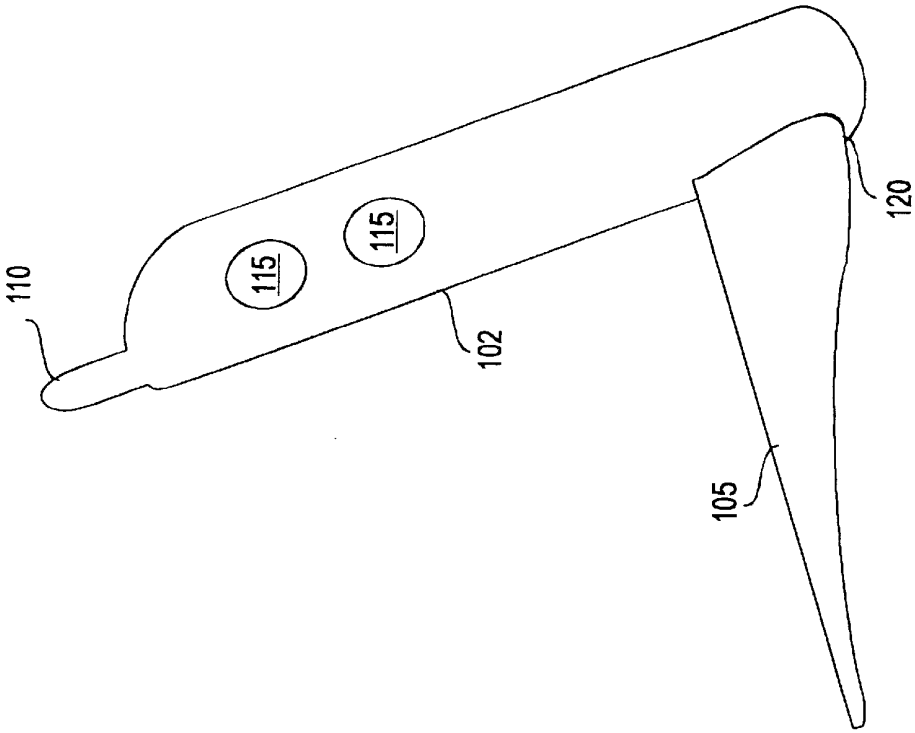

Fig. 1c

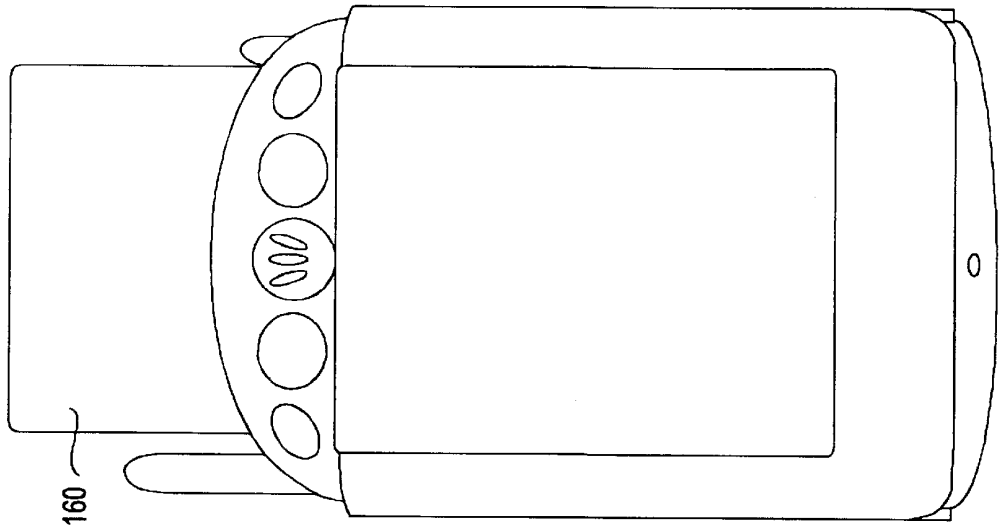

Fig. 1f

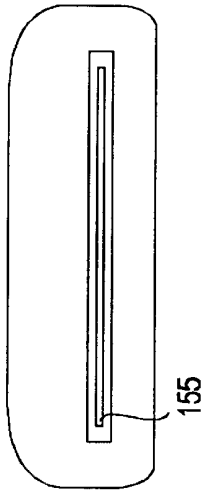

Fig. 1g

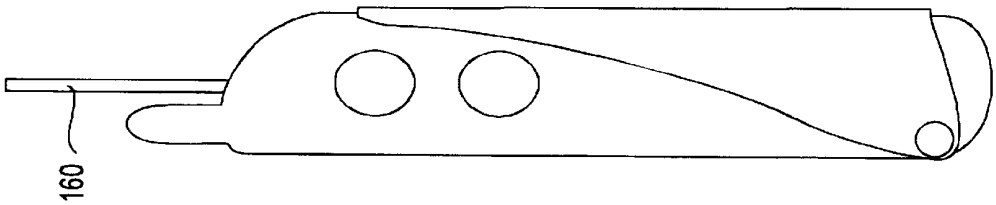

Fig. 1e

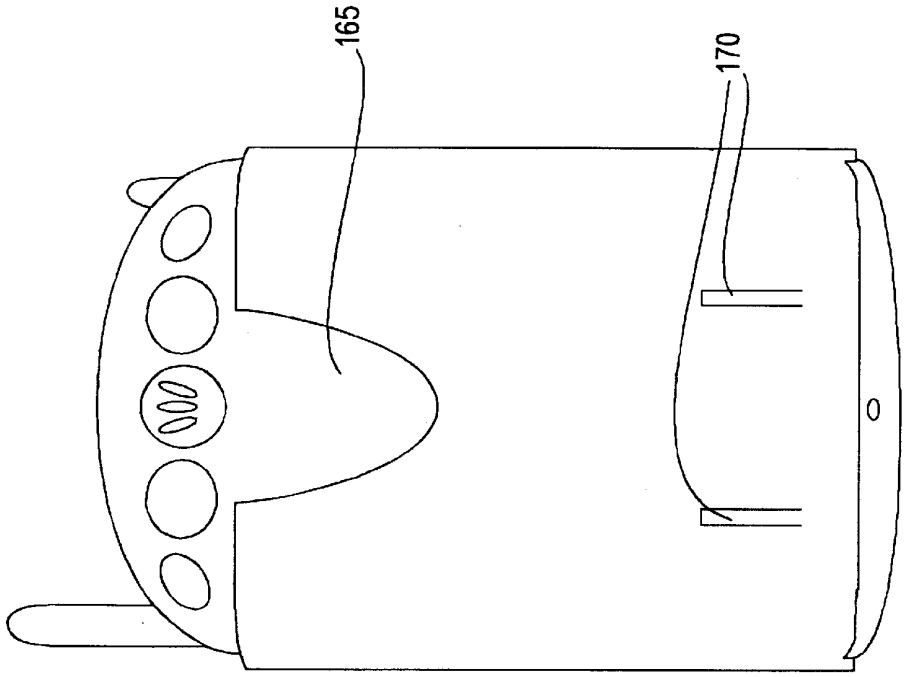

Fig. 1h

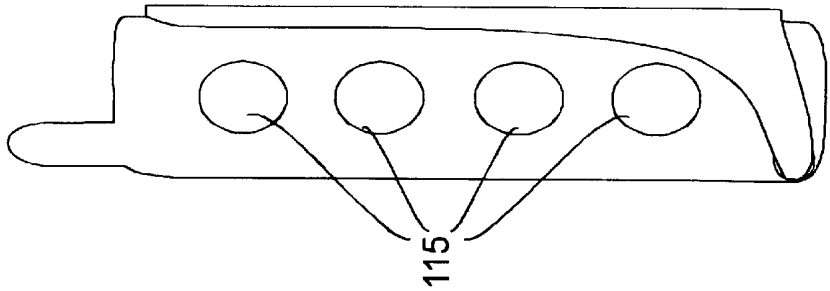

Fig. 1k

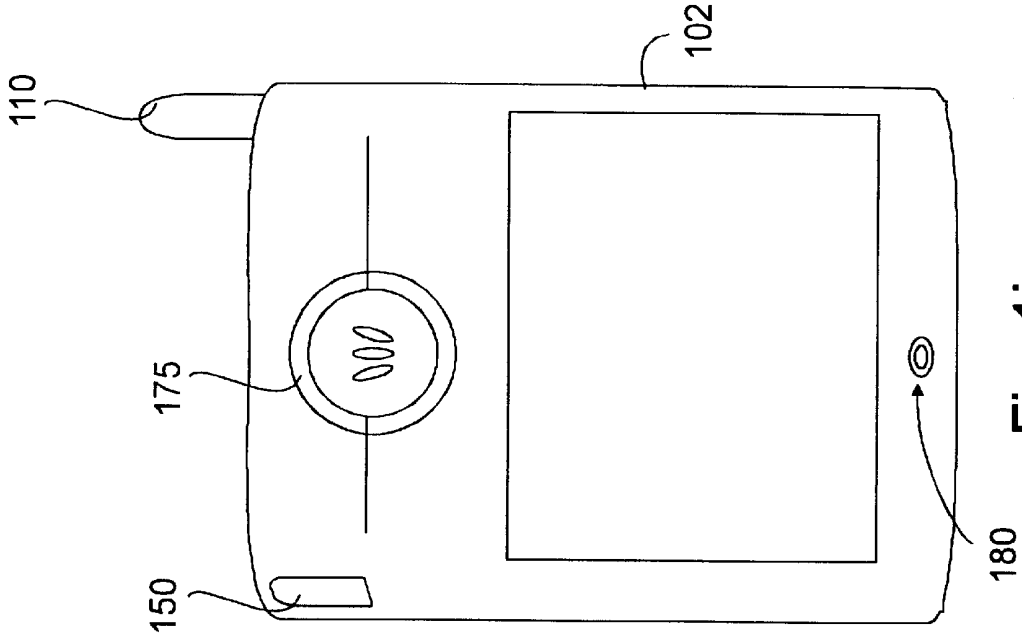

Fig. 1j

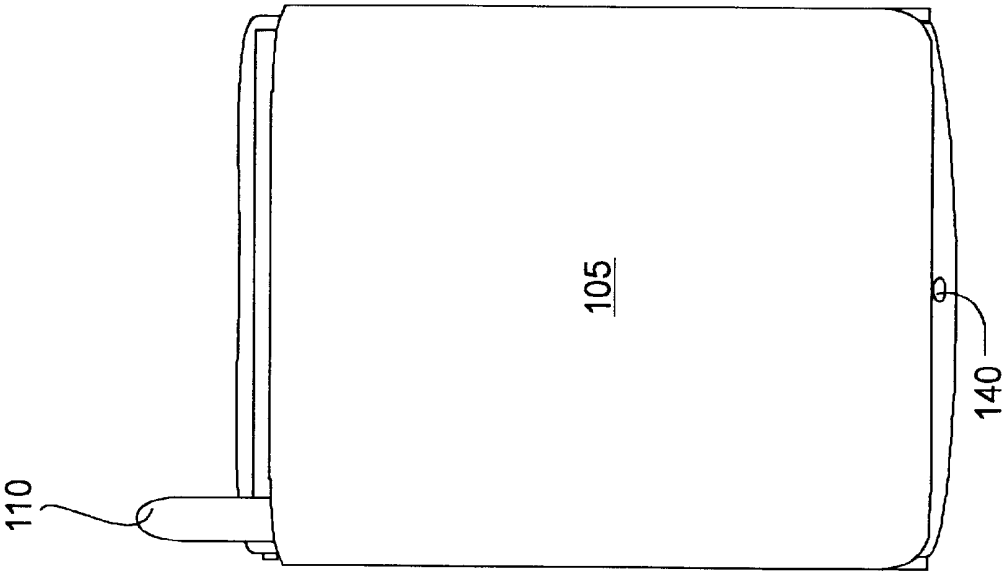

Fig. 1i

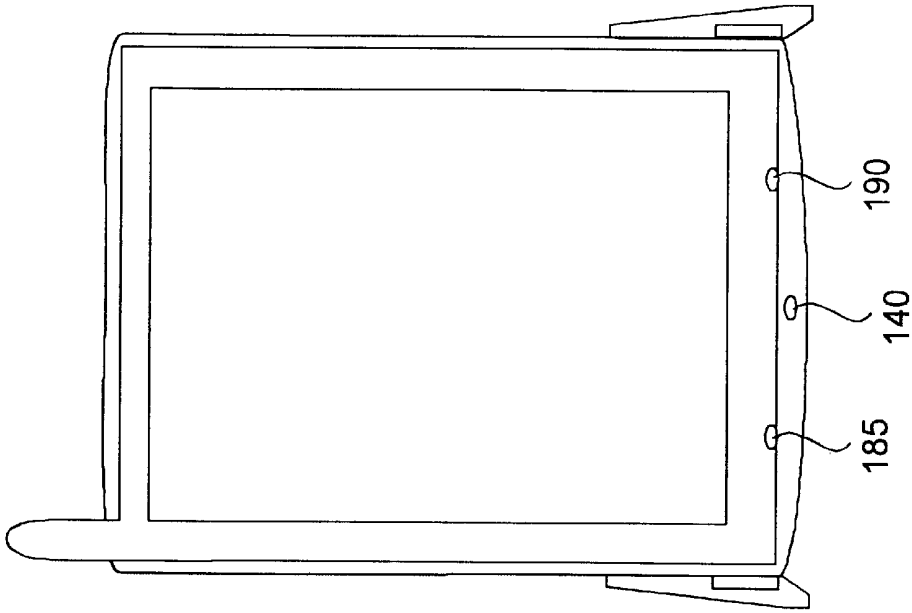

Fig. 1m

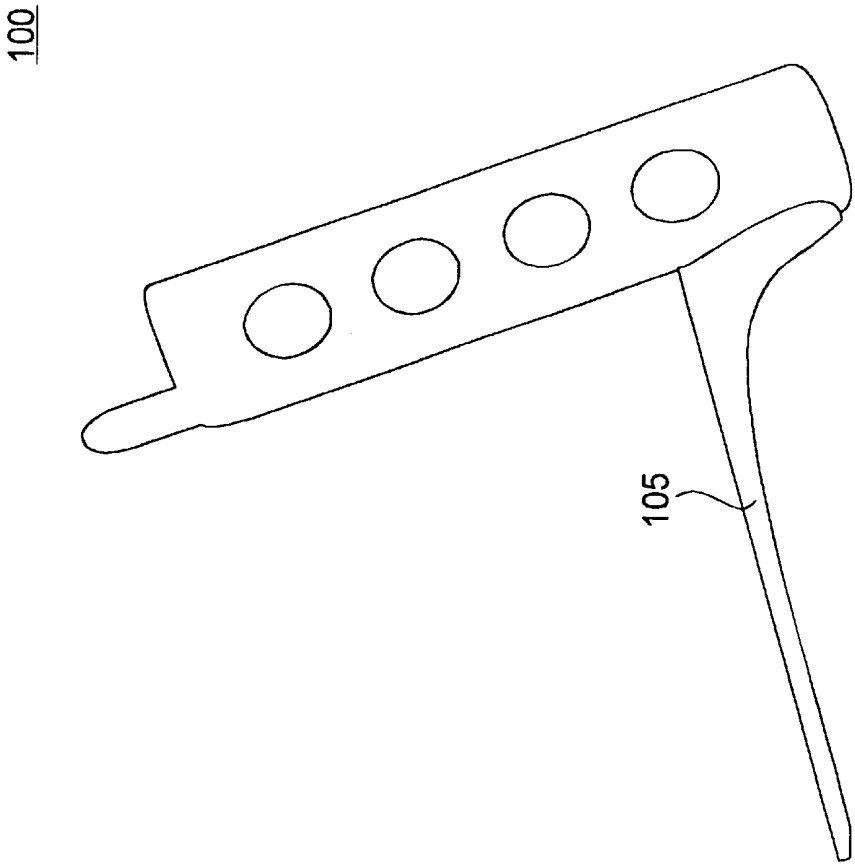

Fig. 1l

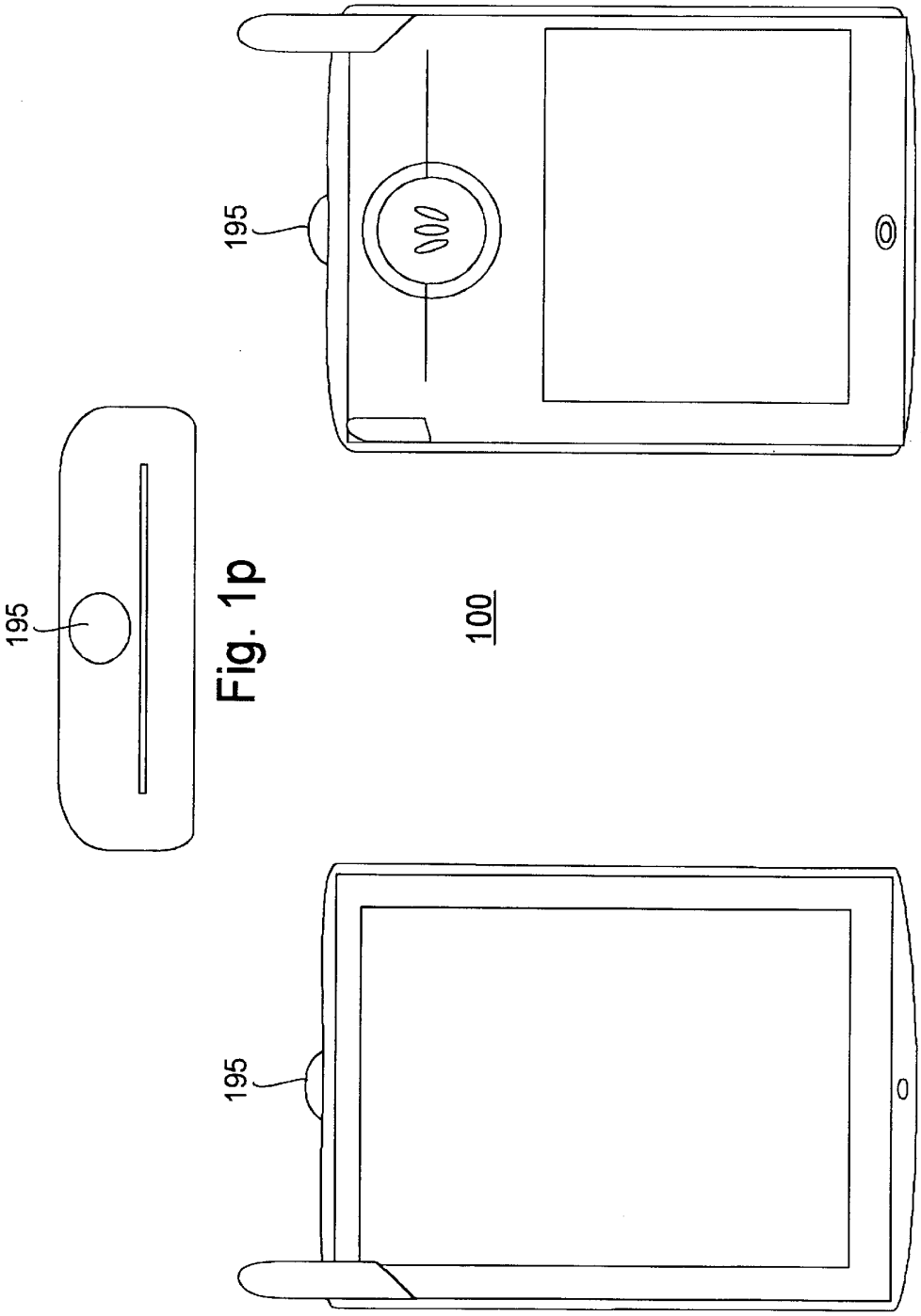

Fig. 1p

Fig. 1o

Fig. 1n

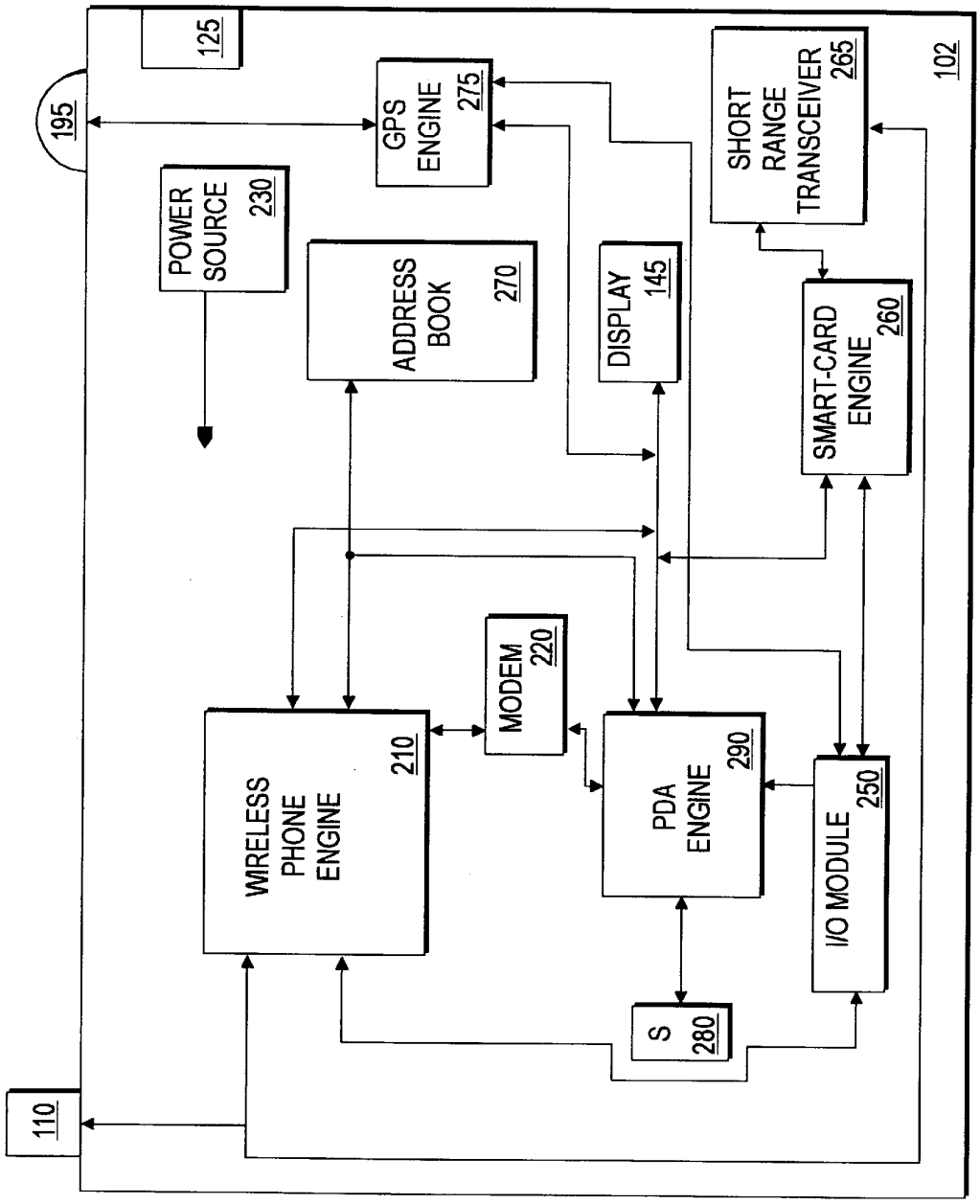
125
195
GPS ENGINE 275
SHORT RANGE TRANSCEIVER 265
102
POWER SOURCE 230
ADDRESS BOOK 270
DISPLAY 145
SMART-CARD ENGINE 260
MODEM 220
WIRELESS PHONE ENGINE 210
PDA ENGINE 290
I/O MODULE 250
S 280
110

Fig. 2

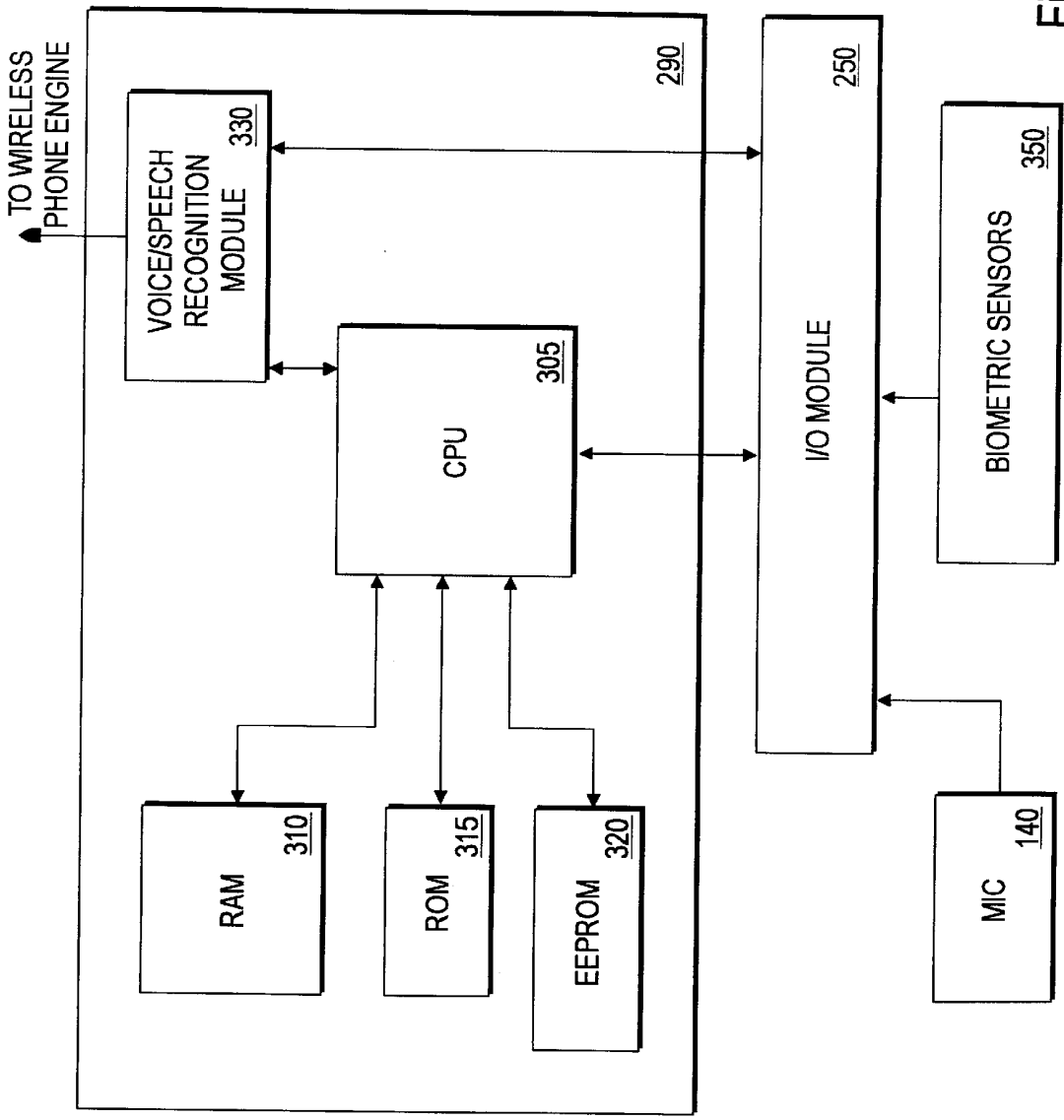
TO WIRELESS PHONE ENGINE
VOICE/SPEECH RECOGNITION MODULE
330
290
CPU
305
RAM
310
ROM
315
EEPROM
320
I/O MODULE
250
BIOMETRIC SENSORS
350
MIC
140

Fig. 3

PERSONAL DIGITAL ASSISTANT WITH WIRELESS TELEPHONE

FIELD OF THE INVENTION

The present invention relates to the field of personal digital assistants; more particularly, the present invention relates to a personal digital assistant having expanded capabilities including wireless communication capabilities.

BACKGROUND

The popularity and use of Personal Digital Assistants (PDAs) and wireless telephones has increased in recent years. A PDA or hand-held computer is primarily a lightweight, compact productivity and communications tool that can typically be held in one hand, leaving the other free to input data with a pen type stylus or a reduced size keyboard. A PDA provides computing and information storage and retrieval capabilities for personal or business use. Typical uses include schedule and address book storage and retrieval, as well as note taking functions. In addition, many PDAs are capable of running a variety of application software packages (e.g., calculators, text and/or image editors, etc.).

Wireless telephones are integrated radio transmitter-receivers that are capable of accessing a vast web of existing telephone connections. Increasingly, wireless telephones are being combined with PDAs in order to perform more advanced functions, such as transmitting, receiving and displaying text messages. However, typical PDA/wireless telephone combinations have limited functionality. For example, although typical wireless telephones may provide for limited address book information (e.g., telephone listings by name), they do not feature full address books and schedule calendars. Additionally, typical PDA/wireless telephone combinations are unable to run application software packages or transmit and receive video data. Further, PDA/wireless telephone combinations typically include a small LED display which makes it very difficult to use such units for anything other than displaying telephone numbers and the status of a call.

Due to the limited functionality of typical PDA/wireless telephone combinations, users typically transport both a PDA and a wireless telephone. Having to physically carry around two pieces of electronic equipment is very inconvenient. Thus, having to use both a wireless telephone and a PDA is very cumbersome and disadvantageous. Taking this one step further, users also typically transport a wallet. Having to physically carry around two electronic devices and a wallet is even more inconvenient.

SUMMARY OF THE INVENTION

A wireless telephone engine, smart-card engine and Personal Digital Assistant (PDA) engine are integrated in a single device, wherein an address book is shared by the wireless telephone engine and PDA engine. An associated display unit including a touch screen is coupled to the PDA. The smart-card engine is configured to communicate with external devices via a short-range transceiver. Additionally, the PDA engine is configured to automatically balance an electronic account ledger based upon point of sale transactions, and control a remote device by transmitting signals to the device via the short-range transceiver and/or the wireless telephone engine. The PDA engine is also configured to receive signals from the remote device regarding the status of the remote device. Further, the PDA engine is configured to exchange data with a remote computer via the wireless telephone engine. The exchanged data includes information stored within the PDA engine and the address book.

In another embodiment, the device also includes digital camera for recording images, a modern coupled to the wireless telephone engine and the PDA engine, input/output (I/O) circuitry coupled to the wireless telephone engine, smart-card engine and the PDA engine, and speech recognition circuitry configured to access the wireless telephone engine, the address book and the PDA engine. In addition, the device includes a Global Positioning System (GPS) antenna and a GPS engine coupled to the GPS antenna.

BRIEF DESCRIPTION OF THE DRAWINGS

The present invention will be understood more fully from the detailed description given below and from the accompanying drawings of various embodiments of the invention. The drawings, however, should not be taken to limit the invention to the specific embodiments, but are for explanation and understanding only.

FIG. **1***a* illustrates the side view of a PDA telephone in accordance with one embodiment of the present invention;

FIG. **1***b* illustrates the front view of a PDA telephone in accordance with one embodiment of the present invention;

FIG. **1***c* illustrates a side view of a PDA telephone in accordance with one embodiment of the present invention;

FIG. **1***d* illustrates the front view of a PDA telephone with smart-card reader in accordance with one embodiment of the present invention;

FIG. **1***e* illustrates a side view of a PDA telephone with smart-card reader in accordance with one embodiment of the present invention;

FIG. **1***f* illustrates the front view of a PDA telephone with smart-card reader in accordance with one embodiment of the present invention;

FIG. **1***g* illustrates the top view of a PDA telephone with smart-card reader in accordance with one embodiment of the present invention;

FIG. **1***h* illustrates the front view of a PDA telephone in accordance with one embodiment of the present invention;

FIG. **1***i* illustrates the front view of PDA telephone in accordance with one embodiment of the present invention;

FIG. **1***j* illustrates the rear view of PDA telephone in accordance with one embodiment of the present invention;

FIG. **1***k* illustrates the side view of PDA telephone in accordance with one embodiment of the present invention;

FIG. **1***l* illustrates a side view of PDA telephone in accordance with one embodiment of the present invention;

FIG. **1***m* illustrates the front view of PDA telephone in accordance with one embodiment of the present invention;

FIG. **1***n* illustrates the front view of PDA telephone with a Global Positioning System (GPS) in accordance with one embodiment of the present invention;

FIG. **1***o* illustrates the rear view of PDA telephone with a GPS in accordance with one embodiment of the present invention;

FIG. **1***p* illustrates the top view of PDA telephone with a GPS in accordance with one embodiment of the present invention

FIG. **2** illustrates a block diagram of a housing of a PDA telephone with smart-card reader in accordance with one embodiment of the present invention; and

FIG. **3** illustrates a block diagram of a PDA engine in accordance with one embodiment of the present invention.

DETAILED DESCRIPTION

FIGS. **1***a*–**1***d* illustrate a PDA telephone **100** that provides the combined functionality of a Personal Digital Assistant (PDA) and a wireless telephone and may include other features as discussed below. PDA telephone **100** may be configured to store notes, track calendar appointments, store addresses, and perform other conventional PDA applications. Furthermore PDA telephone **100** may be used to initiate and receive telephone calls, track received calls, store received alphanumeric and text messages, and carry out other functions of a wireless telephone. In addition to combining such functionality into a single unit, PDA telephone **100** may be equipped with optional enhanced feature sets, including: precise positioning capabilities, smart card reader/writer capabilities, short-range wireless transceiver operations, biometric sensor security features, speaker phone functionality, video conferencing/video capture capabilities, and/or remote control capabilities.

Referring to FIGS. **1***a* and **1***b,* side and front views of PDA telephone **100** are illustrated, respectively. PDA telephone **100** includes a housing **102** and display cover **105**. Display cover **105** protects PDA telephone **100** from undesired contact that could damage the underlying display. According to one embodiment, display cover **105** may remain closed while a user utilizes the telephone features of PDA telephone **100**. For example, while a user is conducting a telephone call, display cover **105** may remain closed so that the user does not accidentally touch or scratch the display while holding the unit against an ear.. Additionally display cover **105** may be made entirely or in part of transparent material in order to read information on the underlying display without having to open the cover.

PDA telephone **100** also includes an antenna **110**, side-action buttons **115**, hinges **120**, multi-use port **125**, buttons **130**, speaker **135** and microphone **140**. Antenna **110** functions as a conductive radiation element for PDA telephone **100** that radiates and/or receives electromagnetic waves. Side-action buttons **115** allow single handed operation of PDA telephone **100** with a user's thumb and fingers. Side-action. buttons **115** may be arranged on housing **102** in convenient positions so as to provide left or right-handed user access to PDA telephone **100**. In addition, side-action buttons **115** may be used to execute other functions of PDA telephone, such as the muting of telephone calls, the accessing of menu items, etc.

Hinges **120** permit display cover **105** to rotate about housing **102**. According to one embodiment, hinges **120** may allow display cover **105** to rotate approximately 270° about a through axis near the bottom of housing **102**. Hinges **120** thus permit display cover **105** to rotate to a position that enables housing **102** to rest against display cover **120**; Thus, display cover **105** may function as a stand for housing **102** (See FIGS. **1***c* and **1***d*).

Multi-use port **125** may be used to connect PDA application equipment, such as an external modem, to PDA telephone **100**. In addition, multi-use port **125** may be used to couple or synchronize PDA telephone **100** with a computer system in order to backup or download user files. Further, multi-use port **125** may be used to connect an external power source to PDA telephone **100**.

Buttons **130** also allow single handed operation of PDA telephone **100** with a user's thumb and fingers. These buttons provide user access to features of PDA telephone **100** that may not be accessible using side-action buttons **115** and/or that may be user-assigned. According to one embodiment, one button may be used to activate a lamp to light up PDA telephone **100**. Another button may be used to initiate/end a telephone call. Further, a button may be used to power PDA telephone **100** on and off. However, one of ordinary skill in the art will appreciate that buttons **130** may be used to perform other functions in PDA telephone **100**, such as speaker volume adjustment, etc. Such functions may depend on a selected mode of operation.

Speaker **135** transmits audio information from PDA telephone **100** to a user. Microphone **140** transmits audio information from a user to PDA telephone **100** and converts the information to electrical signals. Each of these units operates in the conventional fashion, and may further permit the presentation of audio tones/alarms to a user and/or the integration of voice/speech activated functions.

Referring to FIGS. **1***c* and **1***d,* side and front views of PDA telephone **100** are illustrated, respectively, with display cover **105** opened. PDA telephone **100** further includes a display **145** and stylus **150**. Display **145** provides a visual means for displaying information to a user. According to one embodiment, display **145** is approximately 60×80 mm and is configured to accommodate up to 40 characters on each of **40** lines. Further, display **145** provides for scaleable font sizes. However, one of ordinary skill in the art will appreciate that PDA telephone **100** may be configured with other types of displays of different dimensions.

A user may control cursors and/or other elements displayed on display **145** by manipulating side-action buttons **115** and/or buttons **130**. Additionally, display **145** may be a touchscreen that is accessed by touching fields of display **145** with a finger or with stylus **150**. In FIG. **1***d,* stylus **150** is shown housed in a recessed opening of housing **102**. Stylus **150** may be a conventional pen-type stylus or finger-tip stylus if so preferred. Where a touchscreen is used, PDA telephone **100** may be configured to recognize handwriting written on display **145**.

FIGS. **1***e,* **1***f* and **1***g,* illustrate the smart card functionalities that may be included in PDA telephone **100**. In such embodiments, PDA telephone **100** includes a smart-card slot **155** that provides access to a smart-card reader/writer (not shown in this illustration). According to one embodiment, the smart-card reader/writer may be configured to read encoded information stored on a smart-card and/or to write information thereto. Smart-card **160** contains an embedded chip that may store information for credit, cash, prepaid phone and/or medical smart-card applications, to name a few.

FIG. **1***h* illustrates a further embodiment of PDA telephone **100** demonstrating smart-card storage means **165** with integrated pressing mechanisms **170**. Smart-card storage means **165** may be a plastic wall embedded between display cover **105** and display **145**. Smart-card storage means **165** enable multiple smart-cards **160** to be stored with PDA telephone. **100** without scratching display **145**. Alternatively, smart-card storage means **165** may be implemented by providing a slot on the outside of display cover **145** or on housing **102**. Pressing mechanisms **170** provide a locking mechanism to ensure that smart-cards **160** do not unintentionally slide out of smart-card storage means **165**.

FIGS. **1***i*–**1***m* illustrate still further embodiments of PDA telephone **100**. Referring to FIGS. **1***i*–**1***k,* buttons **130** are replaced with (or augmented by) additional side-action buttons **115**. Also, housing **102** is adapted to allow for a speaker **175** and microphone **180** located on the reverse side

of the unit. By positioning speaker **175** and microphone **180** on the reverse side of the unit, the length of PDA telephone **100** is now determined by the length of display **145** (e.g., 80 mm). Further, because of the location of speaker **175** and microphone **180** a user is assured of not damaging display **145** when using the telephone features of PDA telephone **100**. In some cases, side-action buttons **115** may also be configured to operate as alphanumeric keys (i.e., in addition to the functions noted above) so that a user may dial a number in order to initiate a telephone call.

Referring to FIGS. **1***l*–**1***m*, PDA telephone **100** may also include a loudspeaker **185** (e.g., in place of speaker **135**) and/or a camera **190**. Loudspeaker **185** transmits audio information from PDA telephone **100** to a user. Loudspeaker **185** delivers sound at a sufficient level to enable a user to receive audio information without placing an ear to PDA telephone **100** (i.e., during speakerphone operation). Camera **190** records video images and stores them within. PDA telephone **100**. Additionally, video images recorded by camera **190** may also be transmitted from PDA telephone **100** in real time during a telephone call (thus allowing for video conferencing). Additional loudspeakers **185** may be included in order to provide stereo sound.

As indicated, PDA telephone **100** may operate in a speaker phone mode. As discussed above, display cover **105** rotates to function as a stand for housing **102**. Thus, housing **102** will be angled (e.g., with reference to a level plane), whenever it is in a resting position against display cover **105**. The angled position of housing **102** provides an optimal positioning for the speaker phone mode since it directs loud speaker **185** and microphone **140** towards a user. In the speaker phone mode users may carry out hands-free telephone conversation without the use of additional attachments to PDA telephone **100**. For video conferencing, video information may be displayed on display **145** while audio is played but through loud speaker **185**.

FIGS. **1***n*–**1***p* illustrate PDA telephone **100** configured with further enhancements. In this embodiment, PDA telephone **100** includes a Global Positioning System (GPS) receiver/engine having an associated antenna **195** for receiving signals from GPS satellites. GPS antenna **195** is coupled to GPS receiver circuitry (at least some of which may be software GPS engine functions) within housing **102** for calculating the position of PDA telephone **100**. The use of such GPS technology may allow for the inclusion of mapping and other features associated with conventional GPS devices.

FIG. **2** illustrates the major components of PDA telephone **100** in block diagram form. PDA telephone **100** includes a wireless phone engine **210**, modem **220**, power source **230**, display unit **145**, input/output (I/O) module **250**, smart-card engine **260**, short-range transceiver **265**, address book **270**, GPS engine **275**, synchronization circuitry **280**, and PDA engine **290**.

Wireless telephone engine **210** provides the wireless telephone operations of PDA telephone **100**. Wireless phone engine **210** transmits and receives audio data via antenna **110**, as well as text and images. Wireless phone engine **210** may include a CPU, a long range transceiver for transmitting and receiving data, and a digital signal processor for converting between analog and digital data. According to one embodiment, wireless phone engine **210** may operate on an analog control channel. However, in a further embodiment, wireless phone engine **210** may also operate on a digital control channel.

Modem **220** is coupled to wireless phone engine **210** and enables PDA telephone **100** to send and receive fax messages, or have Internet access. Power source **230** provides an electrical power supply to PDA telephone **100** whenever it is powered up. According to one embodiment, power source **230** may include one or more battery cells. However, in a further embodiment, an external power supply may be coupled to PDA telephone **100** via multi-use port **125** in order to provide a power supply.

Display **145** is coupled to wireless telephone engine **210**, smart-card engine **260** and PDA engine **290**. As discussed above, display **145** may include a touchscreen that is accessed by touching display **145** with a finger or stylus. I/O module **250** provides an interface for inputting and outputting data to wireless phone engine **210**, smart-card engine **260** and PDA engine **290**. 10 module **250** handles data transmitted to and from side-action buttons **115**, buttons **130**, multi-use port **125**, speakers **135** and **175**, microphone **140**, loud speaker **185**, camera **190** and display **145** (where a touchscreen is used).

Smart-card engine **260** processes encoded information received from a smart-card and also provides the smart card writing capabilities. Short-range transceiver **265** is a low-power transceiver (e.g., a Bluetooth transceiver) coupled to smart-card engine **260** and antenna **110**. Short-range transceiver **265** enables PDA telephone **100** to establish a wireless link in order to communicate with other devices. According to one embodiment, smart-card engine **260** may be configured to communicate with various point-of-sale terminals and/or other appliances via short-range transceiver **265**. In such an embodiment, a user may purchase items using PDA telephone **100** and a cash card/debit card/credit card and other smart card.

For example, before proceeding to a checkout counter to purchase one or more items, the user may insert a smart credit or cash card into smart-card slot **155**. While at the checkout counter the merchant initiates a high data rate wireless communication link with PDA telephone **100** via antenna **110** and smart-card engine **260**. Smart-card engine **260** reads the card account information and transmits it to the point of sale terminal along with a user identification number. The terminal may then transmit information back to PDA telephone **100** indicating the charged amount, merchant ID, etc. Additionally, user confirmation signals may be transmitted back to the point of sale terminal.

According to yet another embodiment, PDA telephone **100** may be configured to carry out automatic checkbook functions. In this embodiment, the sale transaction information is transmitted from smart-card engine **260** to PDA engine **290** in order to update a financial accounting record of the user's personal or business finances. In addition, the transaction information may be transmitted to a financial institution via wireless telephone engine **210**. Subsequently, the financial institution may transmit the new balance of the account back to PDA telephone **100**, where it is stored in PDA engine **290**. Consequently, PDA telephone **100** may automatically update a user's checkbook each time a transaction is executed. Note, in some cases, smart-card engine **260** may include one or more smart-card chips, thus obviating the need for external smart cards.

Address book **270** is coupled to wireless phone engine **210** and PDA engine **290**. Address book **270** may store a user's address and calendar information that may be accessed by both wireless phone engine **210** and PDA engine **290**. A user may directly access an entry, or select from a list of entries, in address book **270** in order to retrieve a telephone number to dial. Wireless phone engine **210** subsequently accesses address book **270** and retrieves a desired telephone or fax

number corresponding with the selected entry. If more than one telephone or fax number is available for a listing the user may select which number is to be dialed by wireless phone engine **210** or numbers may be dialed in sequence (e.g., work numbers first, then home numbers, etc.) until a connection is made. After selecting an entry wireless phone engine **210** dials the number and establishes a wireless connection without requiring further user input.

A user may also retrieve entries from address book **270** simply to display on display **145**. According to one embodiment, the user selects an icon on display **145** that initiates a listing of the entries in address book **270**. Alternatively, the user may initiate a key word search for an entry. Once an entry is selected, full address information, including telephone and fax numbers, is transmitted from address book **270** to PDA engine **290**, and thereafter to display **145**. In another embodiment, wireless telephone engine **210** may retrieve an electronic mail (e-mail) address and/or a world wide web URL from address book **270** in order to initiate a transaction.

According to a further embodiment, the user may manually select an item of an entry displayed on display **145** (e.g., telephone number, e-mail address, etc.) in order to initiate a transaction. The user may select the item by tapping the location on display **145** at which the item is displayed. After selecting the item, the user may engage wireless phone engine **210** by manipulating side-action buttons **115** or buttons **130**. The telephone number to be dialed is then transferred from PDA engine **290** and transmitted to wireless phone engine **210**. Wireless phone engine **210** subsequently dials the number in order to carry out the transaction.

GPS engine **275** is coupled to display **145**, GPS antenna **195**, I/O module **250** and PDA engine **290**. GPS engine **275** receives signals from GPS satellites via GPS antenna **195** and calculates the position of PDA telephone **100** in the conventional fashion. A system user may access GPS engine **275** by manipulating side-action buttons **115**, by the touch screen of display **145** or through voice activation. According to one embodiment, the positioning information received is displayed on display **145**, for example using stored on retrieved maps. However, in another embodiment, the positioning information (e.g., latitude and longitude, etc.) may be presented to a user in the form of audio played out over speakers **185** and/or **190**.

Synchronization circuitry **280** is coupled to PDA engine **290** and is used to synchronize PDA telephone **100** with a computer system in order to transfer and/or backup PDA applications and data files. Thus, PDA engine **290** functions as a data storage and processing unit for PDA telephone **100**. Such synchronization schemes are well known in the art and need not be further described herein.

Referring now to FIG. **3**, PDA engine **290** is illustrated in further detail and includes central processing unit (CPU) **305**, random access memory (RAM) **310**, read only memory (ROM) **315**, electrically erasable programmable read only memory (EEPROM) **320** and voice/speech recognition module **330**. I/O module **250** is coupled to CPU **305** and voice/speech recognition module **330**. CPU **305** processes information received at PDA engine **290**. RAM **310** is coupled to CPU **305** and is used as a temporary storage area for data processed by CPU **305**.

ROM **315** is coupled to CPU **305**. ROM **315** stores the operating system for PDA telephone **100**. According to one embodiment, PDA telephone **100** uses a Microsoft Windows CE®-based operating system. However, one of ordinary skill in the art will appreciate that PDA telephone **100** may function using other operating systems (e.g., the Palm™ operating system of 3Com Corp.). According to another embodiment, the operating system may include a web browser in order to facilitate Internet access for a PDA telephone **100**. EEPROM **320** is also coupled to CPU **305** and may be used to store application software.

Voice/speech recognition module **330** is coupled to CPU **305** and has the ability to recognize and carry out voice commands. Voice/speech recognition module **330** stores a vocabulary of words that are used to initiate commands and access data. Voice/speech recognition module **330** may also be configured to identify a speech patterns of one or more users against stored replicas thereof.

According one embodiment, a user may initiate a telephone call by issuing a voice command. For example, a user may give a command to ìCALL JOHNî. This command is transmitted from microphone **140** through I/O module **250** to voice/speech recognition module **330**. Voice/speech recognition module **330** parses the input, recognizes a request to make a telephone call and forwards the command to wireless telephone engine **210**. Wireless phone engine **210** subsequently accesses address book **270** and retrieves one or more desired telephone numbers corresponding with the selected entry.

If there is only one person with the requested name to call (e.g., JOHN), and one telephone number for that person, wireless telephone engine **210** automatically dials the telephone number of the name spoken by the user. If there is more than one person with the name spoken by the user, or more than one telephone number for that person, stored in address book **270**, a listing is displayed on display **145** that prompts the user to select the desired telephone number to dial. After making a selection, wireless telephone engine **210** dials the number. In a further embodiment, a user may initiate a call by reciting the telephone number of the person to call.

According to yet another embodiment, a user may show a listing on display **145** by issuing a command. For example, a user may give a command to ìDISPLAY JANEî. As described above, this command is transmitted from microphone **140** through I/O module **250** to voice/speech recognition module **330**. Voice/speech recognition module **330** recognizes a request to show the requested name on display **145** and forwards the command to CPU **305**. CPU **305** subsequently accesses address book **270** and retrieves the desired address information corresponding with the selected entry.

If there is only one person with the requested name to call (e.g., JANE), CPU **305** transmits the address information to display **145** where it is displayed. If there is more than one person with the name spoken by the user stored in address book **270**, a listing is shown on display **145** with all entries stored in address book **270** with the spoken name. After the user makes a selection, CPU **305** transmits the address information of the person selected to display **145** where it is displayed. The examples shown above are only illustrative of embodiments of the present invention, and not limiting. One of ordinary skill in the art will recognize that voice/speech recognition module **330** may be configured to recognize and execute a multitude of commands. For example, a user may view or access an e-mail address or web-site URL by issuing a command in a manner that is similar to viewing or initiating a telephone call.

Biometric sensors **350**, such as fingerprint ID devices, etc., may also be coupled to PDA telephone **100** through I/O module **250**. Such sensors **350** may provide security features that prevent unauthorized users from exploiting PDA telephone **100**.

According to another embodiment, PDA telephone **100** may also function as a remote controller. In such an embodiment, PDA engine **290** transmits signals to various devices using either wireless telephone engine **210** or short range transceiver **265**. For example, PDA telephone **100** may be configured to remotely control audio/video appliances, automobile door locks, garage door openers, home alarm systems, heating, ventilation, and air conditioning systems, etc.

Each device to be controlled by PDA telephone **100** is equipped with a wireless transceiver or receiver. The transceiver/receiver is configured to receive functional commands from PDA telephone **100** to take some particular action. If the device is equipped with a transceiver, the device may also be configured to transmit status information back to PDA telephone **100**.

According to a further embodiment, PDA telephone **100** may remotely communicate with a computer system. PDA telephone **100** may remotely transmit the contents of address book **270** and/or PDA engine **275** using wireless telephone engine **210**. This permits PDA telephone **100** to back up files by downloading them to a remote computer system. The wireless transaction between PDA telephone **100** and the computer system may be initiated by either PDA telephone **100** or the computer system. For example a PDA telephone **100** user may initiate the transaction by speech control, side-action buttons **115** or display **145**. Alternatively, the computer system may be configured with an alarm that initiates a wireless connection with PDA telephone **100**.

Thus, a PDA with wireless telephone has been described. What is claimed is:

1. A communication device comprising:

a housing having a front side and a back side;

a cover rotatably attached to the housing and being rotatable from a first position to a second position, wherein when the cover is in the first position, the cover is in contact with the front side of the housing at least partially covering a display of the communication device and the communication device is operable in a phone mode, and when the cover is in the second position the cover is disposed at an angle relative to the housing and is prevented from further rotation towards the back side of the housing thus functioning as a stand for speakerphone operation of the communication device; and

a speaker located on the back side of the housing.

2. The communication device of claim **1** further comprising:

a wireless telephone engine housed within the housing; and

a Personal Digital Assistant (PDA) engine housed within the housing and coupled to the wireless telephone engine.

3. The communication device of claim **1** further comprising an electronic address book configured to be accessible by both the wireless telephone engine and the PDA engine.

4. The communication device of claim **3** further comprising a display coupled to the PDA engine.

5. The communication device of claim **4**, wherein the display comprises a touch screen.

6. The communication device of claim **5** wherein when the cover is in the first position, the cover covers the display.

7. The communication device of claim **6**, wherein the wireless telephone engine may be accessed to place or receive a telephone call while the cover is covering the display.

8. The communication device of claim **3**, further comprising a smart-card engine housed within the housing.

9. The communication device of claim **8**, wherein the PDA engine is configured to automatically balance an electronic account ledger based upon point of sale transactions.

10. The communication device of claim **8** further comprising input/output (I/O) circuitry coupled to the wireless telephone engine, smart-card engine and the PDA engine.

11. The communication device of claim **8**, comprising:

a slot in the housing adapted for storing smart-cards.

12. The communication device of claim **8**, further comprising a short-range transceiver coupled to the smart card engine.

13. The communication device of claim **12**, wherein the PDA engine is configured to exchange information with a remote device via the short-range transceiver.

14. The communication device of claim **3** further comprising speech recognition circuitry housed within the housing.

15. The communication device of claim **14**, wherein the speech recognition circuitry is configured to access the wireless telephone engine, the address book and the PDA engine.

16. The communication device of claim **3** further comprising a digital camera.

17. The communication device of claim **3** further comprising a modem coupled to the wireless telephone engine and the PDA engine.

18. The communication device of claim **3**, wherein the PDA engine is configured to exchange data with a remote computer via the wireless telephone engine.

19. The communication device of claim **1** further comprising:

a Global Positioning System (GPS) antenna attached to the housing; and

a GPS engine housed within the housing and coupled to the GPS antenna.

20. The communication device of claim **1**, further comprising:

a biometric sensor coupled to the PDA engine.

21. The communication device of claim **1**, further comprising:

a first microphone located on the front side of the housing.

22. The communication device of claim **21**, further comprising a second microphone located on the back side of the housing.

23. The communication device of claim **1**, further comprising a microphone located on the back side of the housing.

* * * * *