IN THE UNITED STATES DISTRICT COURT
FOR THE EASTERN DISTRICT OF TEXAS
MARSHALL DIVISION

MOBILE DATA TECHNOLOGIES LLC, Plaintiff, v. SAMSUNG ELECTRONICS CO., LTD., and SAMSUNG ELECTRONICS AMERICA, INC., Defendants.	Civil Action No. 2:24-CV-00435-JRG-RSP **JURY TRIAL DEMANDED**

SAMSUNG'S INVALIDITY AND SUBJECT MATTER ELIGIBILITY CONTENTIONS

Pursuant to Patent Rules 3-3 and 3-4, the Second Amended Docket Control Order entered by the Court (Dkt. No. 41), and Paragraph 3 of the Discovery Order (Dkt. No. 24), Defendants Samsung Electronics Co., Ltd. and Samsung Electronics America, Inc. (collectively "Samsung" or "Defendants") hereby provide their Invalidity and Subject Matter Eligibility Contentions and accompanying document production with respect to the claims identified by Plaintiff Mobile Data Technologies LLC ("MDT" or "Plaintiff") in its Patent Rule 3-1 Disclosures.

Defendants' Invalidity Contentions include the accompanying claim charts concerning U.S. Patent Nos. 8,793,336 ("the '336 patent"), 8,825,801 ("the '801 patent"), 9,032,039 ("the '039 patent"), 9,619,578 ("the '578 patent"), and 9,922,348 ("the '348 patent") (collectively, the "Asserted Patents"). Defendants also submit their Subject Matter Eligibility Contentions concerning the Asserted Patents in accordance with the Court's July 25, 2019 Standing Order Regarding Subject Matter Eligibility Contentions Applicable to All Patent Infringement Cases Assigned to Chief District Judge Rodney Gilstrap and the Docket Control Order (Dkt. No. 41).

I. INTRODUCTION

As disclosed in its P.R. 3-1 Infringement Contentions, Plaintiff asserts the following patents and claims:

Patent	Asserted Claims	Plaintiff's Alleged Priority Date	Chart Prefix
'336	1, 6, 7, 8, 9, 10, 11, 13, 14, 15, 20, 21, 23, 24, 25, 26	June 18, 2002[1]	A
'801	1, 7, 8, 9, 10, 11, 12, 15, 17, 20, 22, 23, 24, 25	June 18, 2002	B
'039	1, 2, 3, 4, 8, 9, 13, 14, 15, 17, 18, 19, 22, 23, 24, 25, 28, 29, 30	June 18, 2002	C
'578	1, 7, 8, 9, 10, 11, 12, 15, 16, 21	June 18, 2002	D
'348	1, 2, 6, 7, 8, 9, 12, 13, 14, 17, 18	June 18, 2002	E

The claims identified above are referenced as "the Asserted Claims" unless reference is made specifically with respect to particularly identified one or more of the Asserted Patents and/or one or more of the Asserted Claims. By identifying Plaintiff's alleged priority date for the Asserted Claims of each patent above, Defendants do not concede that Plaintiff's claims of priority are correct. Instead, Defendants' Invalidity Contentions and Subject Matter Eligibility Contentions as set forth herein and in the accompanying exhibits may reflect Plaintiff's apparent claim constructions based on its Infringement Contentions, with which Defendants disagree.

As further detailed in and supported by these Invalidity Contentions, Defendants contend that each of the Asserted Claims is invalid under at least 35 U.S.C. §§ 101, 102, 103, and/or 112.

[1] Plaintiff's Disclosure of Asserted Claims and Infringement Contentions Pursuant to P.R. 3-1 lists the priority date of June 18, 2022 for each asserted patent. The face of each patent cites Provisional Application No. 60/389,430, filed on June 18, 2002. Defendants therefore interpret Plaintiff's intended priority date as June 18, 2002, in light of apparent typographical errors in Plaintiff's disclosure. Defendants dispute that the Asserted Patents are entitled to a priority date of June 18, 2002, as discussed herein. *See* § VI.A *infra*.

Defendants reserve the right to prove the invalidity of the Asserted Claims on bases other than those required to be disclosed in these disclosures pursuant to P.R. 3-3.

II. AMENDMENT/SUPPLEMENTATION

Defendants' Invalidity Contentions and Subject Matter Eligibility Contentions pertain to the Asserted Claims as identified in Plaintiff's Infringement Contentions. To the extent the Court later allows Plaintiff to amend its infringement contentions and/or assert one or more claims other than the Asserted Claims, Defendants reserve the right to modify, amend, or supplement these Invalidity Contentions and Subject Matter Eligibility Contentions accordingly, for example, to show the invalidity and/or ineligibility of any such newly Asserted Claims.

These Invalidity Contentions and Subject Matter Eligibility Contentions are based on Defendants' current understanding of the Asserted Claims and Plaintiff's apparent view of the scope of those claims as shown, for example, in Plaintiff's Infringement Contentions. A *Markman* Order in this case has not yet been issued, and in no way should these Invalidity Contentions and Subject Matter Eligibility Contentions be taken as any admission or acquiescence by Defendants as to the proper scope of the Asserted Claims and/or proper claim constructions of terms and phrases recited in those claims. By identifying prior art that anticipates and/or renders obvious the Asserted Claims, Defendants do not admit that the claim limitations are capable of construction, do not admit that any claim limitations are supported with an appropriate written description and enabling disclosure in the applicable patent specifications, and do not adopt Plaintiff's apparent claim constructions or admit the accuracy of any particular claim construction.[2] Defendants reserve all rights to later challenge or

[2] Defendants do not concede that Plaintiff's apparent interpretation of the claims is correct, but rather assert the well-established principle that whatever infringes a claim if later in time anticipates if earlier in time. *Bristol-Myers Squibb Co. v. Ben Venue Labs., Inc.*, 246 F.3d 1368, 1378 (Fed. Cir. 2001). Thus, where Plaintiff, for purposes of its infringement case, allege that a feature of an accused product meets a particular limitation recited in one or more of the Asserted Claims, then that feature, should it be found in the prior art, would also cause that limitation to be met for invalidity purposes.

oppose any claim constructions advanced by Plaintiff and to present their own claim construction positions as permitted by the Court.

Defendants further reserve the right to revise these Invalidity Contentions and Subject Matter Eligibility Contentions in view of the Court's construction of terms and phrases recited in one or more of the Asserted Claims, additional information obtained during discovery, additional infringement theories put forth by Plaintiff during fact and/or expert discovery, any findings as to the priority date(s) of the Asserted Claims, and/or positions that Plaintiff, its fact witnesses, or its expert witness(es) may take concerning claim construction, infringement, and/or invalidity issues, as permitted by the Court. Defendants further reserve the right to supplement their accompanying P.R. 3.4(b) document productions should they later discover additional prior art documents, information, testimony, prior art systems and related documentation, and/or software or hardware code, including information provided by third parties after the date of service of these Invalidity Contention and Subject Matter Eligibility Contentions.

Additionally, Plaintiff has not identified its contentions regarding the level of ordinary skill in the art ("POSITA") for any of the Asserted Patents. Thus, Defendants have based their Invalidity and Subject Matter Eligibility Contentions on the level of skill in the art apparent from the face of the Asserted Patents. For the avoidance of doubt, Defendants contend that the Asserted Claims are invalid for the reasons set forth in their Invalidity and Subject Matter Eligibility contentions under any plausible definition of the level of ordinary skill for each of the Asserted Patents. Nevertheless, Defendants reserve the right to revise these Invalidity Contentions and Subject Matter Eligibility Contentions in response to any position taken by Plaintiff on the level of ordinary skill in the art applicable to a given Asserted Patent.

Defendants may further rely on inventor admissions concerning the scope or state of the prior art relevant to the Asserted Claims, the patent prosecution histories of the Asserted Patents, related

patents, and/or patent applications, any deposition or trial testimony of the named inventors of the Asserted Patents, and the papers filed and any evidence produced or submitted by Plaintiff in connection with these cases or other related litigation.

Prior art not included in these Invalidity Contentions and Subject Matter Eligibility Contentions, whether known or not known to Defendants, may become relevant. Defendants are currently unaware of the extent, if any, to which Plaintiff will contend that limitations of the Asserted Claims are not disclosed in the prior art identified in these Invalidity Contentions and Subject Matter Eligibility Contentions. Accordingly, Defendants reserve the right to identify other references that would disclose the allegedly missing limitation(s) of the claimed method, device, or system.

The references identified in these Invalidity Contentions and Subject Matter Eligibility Contentions, which include the attached claim charts, may disclose the elements of the Asserted Claims explicitly and/or inherently, render those elements alone or in combination obvious to those of ordinary skill in the art even absent an explicit or inherent disclosure, and/or they may be relied upon to show the state of the art in the relevant time frame. References identified in these Invalidity Contentions and Subject Matter Eligibility Contentions, as well as the "References Cited" on the face of the Asserted Patents and the patents cited within the body of the Asserted Patents, may be used to illustrate, but not limit the scope of, the state of the art to which the Asserted Patents pertain (i.e., at a time prior to the date of alleged inventions of the Asserted Claims of the Asserted Patents). Moreover, Defendants reserve the ability to rely on later-identified sources of information, including, but not limited to, witness testimony and other discovery, to establish the state of the art in the relevant time frame pertaining to the Asserted Patents.

Because discovery has just recently begun, Defendants anticipate that additional prior art and invalidity bases may be found. Defendants' investigation and analysis of the prior art is continuing, and thus Defendants reserve the right to supplement, amend, and/or revise the information provided

herein as Defendants conduct further investigation and/or analysis, including identifying, charting, and relying on additional references.

Additionally, in view of likely third-party discovery that will be taken, Defendants reserve the right to present additional items of prior art under 35 U.S.C. §§ 102 and/or § 103 located during discovery or further investigation, and to assert contentions of invalidity under 35 U.S.C. § 102 and/or § 103. For example, Defendants have issued subpoenas to third parties believed to have knowledge, documents, and/or other evidence concerning invalidity of one or more of the Asserted Claims.

In addition to the positions and prior art identified in these Invalidity Contentions and Subject Matter Eligibility Contentions (including the accompanying claim charts), Defendants also incorporate by reference all invalidity contentions and subject matter eligibility contentions, prior art,[3] and invalidity claim charts (including, without limitation, all anticipation positions, obviousness positions (including all prior art combinations and motivations to combine), indefiniteness positions, written description positions, and non-enablement positions) concerning one or more of the Asserted Patents, as disclosed at any time. This includes, without limitation, disclosures in previous or related litigation, in United States Patent & Trademark Office ("USPTO") proceedings, by Plaintiff, by any other parties accused of patent infringement by Plaintiff, or by the named inventors or any individuals associated with the prosecution and/or any form of post-grant review or reexamination of the Asserted Patents.

Specifically, for example, Defendants identify, as prior art upon which they may rely to show the invalidity of the Asserted Claims, the prior art references disclosed by parties in any other litigation (including inter partes review and/or reexamination proceedings) involving one or more of the

[3] Prior art appearing in the file histories of the Asserted Patents is not required to be separately produced by Defendants under P.R. 3-4(b).

Asserted Patents, any patent related to any of the Asserted Patents, and/or any other patent allegedly assigned to Plaintiff claiming priority to the Asserted Patents (collectively, "Other Proceedings").[4]

Plaintiff has a present and ongoing duty to produce to Defendants all relevant documents from any Other Proceedings, including, but not limited to, all prior art, invalidity contentions, and expert reports on invalidity (among other relevant items). Defendants reserve the right to supplement or otherwise amend these Invalidity Contentions and Subject Matter Eligibility Contentions in response to any relevant discovery provided by Plaintiff, third parties, opening or rebuttal expert reports, fact or expert depositions, or in response to any claim construction ruling(s) issued by this Court (regardless of how and when such ruling is made). Defendants also reserve the right to supplement or otherwise amend these Invalidity Contentions and Subject Matter Eligibility Contentions in response to any rebuttal evidence disclosed by Plaintiff or as otherwise may be necessary or appropriate under the circumstances.

III. P.R. 3-3(A) – IDENTIFICATION OF PRIOR ART

Pursuant to P.R. 3-3(a), and subject to Defendants' reservations of rights, Defendants identify the following prior art that anticipates and/or renders obvious one or more Asserted Claims of the Patents-in-Suit as detailed in the claim chart exhibits and elsewhere in these Invalidity Contentions. Below are tables identifying individual items of prior art. The prior art references, systems, and products listed below and in the accompanying claim chart exhibits may be relied upon for certain limitations, state of the art, and background of the art; as evidence of the level of skill in the art at the

[4] Defendants also reserve the right to rely on Plaintiff's statements, admissions, and disclaimers with respect to any Asserted Patents or related patents, including, without limitation, statements made in any *inter partes* review proceedings pertaining to any Asserted Patents or related patents (including, without limitation, IPR2024-00246, IPR2024-00247, IPR2024-00248, IPR2024-00249, IPR2024-00250, and Case No. 3:24-CV-00896-WHA ("the N.D. Cal. Action")).

time of the filing of the Patents-in-Suit; or in support of assertions that it is proper to combine certain prior art references in certain ways.[5]

Defendants' identification of patents and publications as prior art herein and in the attached invalidity claim charts includes the publications themselves as well as the use of the products and systems described therein. Defendants' investigation continues, but information available to date indicates that such products and systems were in public use, on sale, and/or otherwise available to the public more than one year before the effective filing date of the Patents-in-Suit. Upon information and belief, these prior art products and systems and their associated references anticipate and/or render obvious one or more of the Asserted Claims of the Patents-in-Suit.

A. Prior Art Patents, Patent Applications, and Publications

Table 1: Prior Art Patents and Patent Applications

Patent Number or Title (Primary Inventor/Author)	Country of Origin	Filing Date	Date of Issue/Publication
U.S. Patent No. 5,404,488 to Kerrigan et al. ("Kerrigan")	U.S.	October 1, 1993	April 9, 1995
U.S. Patent No. 6,009,336 to Harris et al. ("Harris")	U.S.	July 10, 1996	December 28, 1999
U.S. Patent No. 5,893,037 to Reele et al. ("Reele")	U.S.	October 29, 1996	April 6, 1999
U.S. Patent No. 5,937,406 to Balabine et al. ("Balabine")	U.S.	January 31, 1997	August 10, 1999

[5] Defendants' disclosure of prior art is premised on the alleged priority dates of the Asserted Patents as identified in Plaintiff's Infringement Contentions. Defendants contend Plaintiff is not entitled to the alleged priority dates and reserve the right to modify, amend, or supplement their invalidity contentions with additional prior art references if any Asserted Claim is shown not to be entitled to the respective alleged priority date or if Plaintiff alleges any other priority date for any of the Asserted Claims. Notwithstanding that reservation of rights, Defendants also reserve the right to argue that they have been unduly prejudiced should Plaintiff allege a different priority date for any of the Asserted Claims, and that accordingly Plaintiff should not be allowed to do so.

Patent Number or Title (Primary Inventor/Author)	Country of Origin	Filing Date	Date of Issue/Publication
U.S. Patent No. 6,167,438 to Yates et al. ("Yates")	U.S.	May 22, 1997	December 26, 2000
U.S. Patent No. 6,083,353 to Alexander, Jr. ("Alexander, Jr.")	U.S.	September 5, 1997	July 4, 2000
U.S. Patent No. 6,311,185 B1 to Markowitz et al. ("Markowitz")	U.S.	October 30, 1997	October 30, 2001
U.S. Patent No. 6,161,112 to Cragun et al. ("Cragun")	U.S.	May 19, 1998	December 12, 2000
U.S. Patent No. 6,300,947 B1 to Kanvesky ("Kanvesky")	U.S.	July 6, 1998	October 9, 2001
U.S. Patent No. 6,020,884 to MacNaughton et al. ("MacNaughton")	U.S.	August 18, 1998	February 1, 2000
U.S. Patent No. 6,289,362 B1 to Van Der Meer ("Van Der Meer")	U.S.	September 1, 1998	September 11, 2001
U.S. Patent No. 6,415,316 B1 to Van Der Meer ("Van Der Meer")	U.S.	September 1, 1998	July 2, 2002
U.S. Patent No. 6,122,526 to Parulski et al. ("Parulski")	U.S.	January 19, 1999	September 19, 2000
U.S. Patent No. 6,332,127 B1 to Bandera et al. ("Bandera")	U.S.	January 28, 1999	December 18, 2001
U.S. Patent No. 6,434,403 B1 to Ausems et al. ("Ausems")	U.S.	February 19, 1999	August 13, 2002
KR20000074064A	KR	May 18, 1999	December 5, 2000
U.S. Patent No. 6,308,084 B1 to Lonka ("Lonka")	U.S.	June 3, 1999	October 23, 2001

Patent Number or Title (Primary Inventor/Author)	Country of Origin	Filing Date	Date of Issue/Publication
U.S. Patent No. 6,874,146 B1 to Iyengar ("Iyengar")	U.S.	June 30, 1999	March 29, 2005
WO 2000/017775 A2 to Miller et al. ("Miller")	WO	September 22, 1999	March 30, 2000
WO 2000/17775 to Miller et al. ("Miller")	WO	September 22, 1999	March 30, 2000
U.S. Patent No. 7,003,546 to Cheah ("Cheah")	U.S.	October 13, 1999	February 21, 2006
KR100365900B1	KR	December 13, 1999	December 26, 2002
U.S. Patent No. 6,487,583 B1 to Harvey et al. ("Harvey")	U.S.	February 25, 2000	November 26, 2002
U.S. Patent No. 8,015,049 B1 to Tam et al. ("Tam")	U.S.	April 17, 2000	September 6, 2011
U.S. Patent No. 6,594,347 to Calder et al. ("Calder")	U.S.	April 18, 2000	July 15, 2003
U.S. Patent No. 6,421,717 to Kloba et al. ("Kloba")	U.S.	April 28, 2000	July 16, 2002
U.S. Patent No. 6,438,575 to Khan et al. ("Khan")	U.S.	June 16, 2000	August 20, 2002
U.S. Patent No. 6,988,138 B1 to Alcorn et al. ("Alcorn")	U.S.	June 30, 2000	January 17, 2006
WO 2001/01372 A1 to Alcorn et al. ("Alcorn")	WO	June 30, 2000	January 4, 2001
U.S. Patent No. 6,968,179 B1 to De Vries ("De Vries")	U.S.	July 27, 2000	November 22, 2005
U.S. Patent No. 7,668,913 B1 to Underwood et al. ("Underwood")	U.S.	August 30, 2000	February 23, 2010
U.S. Patent No. 6,716,103 to Eck et al. ("Eck")	U.S.	September 11, 2000	April 6, 2004

Patent Number or Title (Primary Inventor/Author)	Country of Origin	Filing Date	Date of Issue/Publication
U.S. Patent No. 6,788,949 to Bansal ("Bansal")	U.S.	September 21, 2000	September 7, 2004
U.S. Patent No. 6,901,437 B1 to Li ("Li")	U.S.	October 6, 2000	May 31, 2005
U.S. Patent No. 7,574,486 B1 to Cheng et al. ("Cheng")	U.S.	November 8, 2000	August 11, 2009
U.S. Patent No. 7,056,217 to Pelkey et al. ("Pelkey")	U.S.	November 28, 2000	June 6, 2006
U.S. Patent No. 6,947,396 B1 to Salmi ("Salmi")	U.S.	December 1, 2000	September 20, 2005
U.S. Patent No. 6,377,793 B1 to Jenkins ("Jenkins")	U.S.	December 6, 2000	April 23, 2002
U.S. Pat. App. Pub. No. 2002/0072982 A1 to Barton et al. ("Barton")	U.S.	December 12, 2000	June 13, 2002
U.S. Patent No. 6,915,138 B2 to Kraft ("Kraft")	U.S.	December 12, 2000	July 5, 2005
U.S. Patent No. 7,185,044 B2 to Ryan et al. ("Ryan")	U.S.	January 19, 2001	February 27, 2007
U.S. Pat. App. Pub. No. 2001/0027422 A1 to Brandrud ("Brandrud")	U.S.	January 24, 2001	October 4, 2001
U.S. Patent No. 6,839,554 B2 to McDowell et al. ("McDowell")	U.S.	January 26, 2001	January 4, 2005
U.S. Pat. App. Pub. No. 2001/0013070 A1 to Sasaki ("Sasaki")	U.S.	February 6, 2001	August 9, 2001
U.S. Pat. App. Pub. No. 2001/0015759 A1 to Squibbs ("Squibbs")	U.S.	February 21, 2001	August 23, 2001
U.S. Pat. App. Pub. No. 2001/0015759 A1 to Squibbs ("Squibbs")	U.S.	February 21, 2001	August 23, 2001

Patent Number or Title (Primary Inventor/Author)	Country of Origin	Filing Date	Date of Issue/Publication
U.S. Pat. App. Pub. No. 2001/0047272 A1 to Frietas et al. ("Freitas")	U.S.	February 28, 2001	November 29, 2001
U.S. Patent No. 8,458,286 B2 to Freitas et al. ("Freitas")	U.S.	February 28, 2001	June 4, 2013
U.S. Patent No. 6,937,588 B2 to Park ("Park")	U.S.	March 8, 2001	August 30, 2005
WO 2001/069406 A1 to Smith et al. ("Smith")	WO	March 15, 2001	September 20, 2001
U.S. Pat. App. Pub. No. 2002/0023132 A1 to Tornabene et al. ("Tornabene")	U.S.	March 19, 2001	February 21, 2002
WO 2001/72002 A2 to Weiden et al. ("Weiden")	WO	March 19, 2001	September 27, 2001
U.S. Pat. App. Pub. No. 2002/0093493 A1 to Michaeli et al. ("Michaeli")	U.S.	March 23, 2001	July 18, 2002
U.S. Patent No. 7,522,911 B2 to Ung et al. ("Ung")	U.S.	March 23, 2001	April 21, 2009
U.S. Pat. App. Pub. No. 2002/0145561 A1 to Sandhu et al. ("Sandhu")	U.S.	April 9, 2001	October 10, 2002
U.S. Patent No. 7,277,927 B2 to Rensin et al. ("Rensin")	U.S.	April 13, 2001	October 2, 2007
WO 2001/93529 A1 to Kopra ("Kopra")	WO	May 25, 2001	December 6, 2001
WO 2001/93069 A2 to Read et al. ("Read")	WO	May 25, 2001	December 6, 2001
WO 2001/97544 A1 to Hendrey et al. ("Hendrey")	WO	June 11, 2001	December 20, 2001
WO 2002/003243 A1 to Austin et al. ("Austin")	WO	June 29, 2001	January 10, 2002
U.S. Patent No. 6,798,358 B2 to Joyce et al. ("Joyce")	U.S.	July 3, 2001	September 28, 2004

Patent Number or Title (Primary Inventor/Author)	Country of Origin	Filing Date	Date of Issue/Publication
U.S. Patent No. 7,984,098 B2 to Enete et al. ("Enete")	U.S.	July 25, 2001	July 19, 2011
U.S. Pat. App. Pub. No. 2002/0044425 A1 to Ijas et al. ("Ijas")	U.S.	July 30, 2001	April 18, 2002
WO 2002/017652 A2 to Randall et al. ("Randall")	WO	August 22, 2001	February 28, 2002
U.S. Pat. App. Pub. No. 2003/0046134 A1 to Frolick et al. ("Frolick")	U.S.	August 28, 2001	March 6, 2003
U.S. Pat. App. Pub. No. 2002/0065927 A1 to Janik et al. ("Janik")	U.S.	September 18, 2001	May 30, 2002
U.S. Patent Application Publication No. 2002/0034384 A1 to Mikhail ("Mikhail")	U.S.	September 18, 2001	March 21, 2002
U.S. Patent No. 6,519,629 B2 to Harvey et al. ("Harvey")	U.S.	October 2, 2001	February 11, 2003
WO 2002/039300 A1 to Brant et al. ("Brant")	WO	November 9, 2001	May 16, 2002
U.S. Pat. App. Pub. No. 2002/0060246 A1 to Gobburu et al. ("Gobburu")	U.S.	November 19, 2001	May 23, 2002
U.S. Patent No. 7,092,495 B2 to Kraft et al. ("Kraft")	U.S.	December 13, 2001	August 15, 2006
U.S. Pat. App. Pub. No. 2002/0123327 A1 to Vataja ("Vataja")	U.S.	December 26, 2001	September 5, 2002
U.S. Pat. App. Pub. No. 2002/0156787 A1 to Jameson et al. ("Jameson")	U.S.	February 13, 2002	October 24, 2002
U.S. Pat. App. Pub. No. 2002/0156787 A1 to Jameson et al. ("Jameson")	U.S.	February 13, 2002	October 24, 2002

Patent Number or Title (Primary Inventor/Author)	Country of Origin	Filing Date	Date of Issue/Publication
U.S. Patent No. 6,813,474 B2 to Robinson et al. ("Robinson")	U.S.	February 22, 2002	November 2, 2004
U.S. Pat. App. Pub. No. 2003/0037110 A1 to Yamamoto ("Yamamoto")	U.S.	February 26, 2002	February 20, 2003
U.S. Patent No. 7,031,718 B2 to Jouppi et al. ("Jouppi")	U.S.	March 13, 2002	April 18, 2006
WO 2002/089408 A1 to Forsyth ("Forsyth")	WO	May 2, 2002	November 7, 2002
U.S. Patent No. 7,047,030 to Forsyth ("Forsyth")	U.S.	May 2, 2002	May 16, 2006
U.S. Patent No. 7,802,207 B2 to Agboatwalla et al. ("Agboatwalla")	U.S.	June 6, 2002	September 21, 2000
U.S. Patent No. 7,076,244 B2 to Lazaridis et al. ("Lazaridis")	U.S.	July 23, 2002	July 11, 2006
U.S. Patent No. 7,421,444 B1 to Owen, Jr. ("Owen, Jr.")	U.S.	December 30, 2000	September 2, 2008
U.S. Pat. App. Pub. No. 2004/0198396 A1 to Fransioli ("Fransilio")	U.S.	May 8, 2000	October 7, 2004
U.S. Pat. App. Pub. No. 2005/0055306 A1 to Miller et al. ("Miller")	U.S.	September 21, 1999	March 10, 2005
U.S. Pat. App. Pub. No. 2007/0124376 A1 to Greenwell ("Greenwell")	U.S.	October 11, 2000	May 31, 2007
U.S. Pat. App. Pub. No. 2007/0136360 A1 to Randall et al. ("Randall")	U.S.	October 31, 2003	June 14, 2007

Patent Number or Title (Primary Inventor/Author)	Country of Origin	Filing Date	Date of Issue/Publication
U.S. Patent No. 8,747,230 B2 to Walker et al. ("Walker")	U.S.	April 15, 2003	June 10, 2014

Table 2: Prior Art Publications

Title	Publication Date	Author	Publisher
Animation on the Web	1999	Sean Wagstaff	Peachpit Press
AT&T debuts mMode	June 2002		CMP Media
Broadband Telecommunications Handbook, 2nd Ed	2002	Regis J. Bates	McGraw-Hill
Browsing the mobile Internet	December 2001	George Lawton	IEEE
CNN, Review - Top 15 Laptops	April 17, 2001	PC World Staff	CNN.com
Combee, Palm OS Web Application Developer's Guide	2001	Ben Combee, R. Eric Lyons, David C. Matthews, Rory Lysaght	Syngress Publishing, Inc.
Compaq iPAQ Pocket PC Accessories Information	2001	Compaq Computer Corporation	Compaq Computer Corporation
Compaq iPAQ Pocket PC H3800 Series Getting Started Guide	2001	Compaq Computer Corporation	Compaq Computer Corporation
Compaq iPAQ Pocket PC H3800 Series QuickSpecs	December 20, 2001	Compaq Computer Corporation	Compaq Computer Corporation
Compaq iPAQ Pocket PC H3800 Series Reference Guide	September 2001	Compaq Computer Corporation	Compaq Computer Corporation
Compaq iPAQ Pocket PC H3800 Series Special Features	2001	Compaq Computer Corporation	Compaq Computer Corporation

Title	Publication Date	Author	Publisher
ETSI TS 123 040 V3.6.0 (2001-09) Technical Specification Digital cellular telecommunications system (Phase 2+) (GSM); Universal Mobile Telecommunications System (UMTS); Technical realization of the Short Message Service (SMS) (3GPP TS 23.040 version 3.6.0 Release 1999)	September 2001	ETSI	ETSI
ETSI TS 123 040 V6.5.0 (2004-09) ("GSM SMS Standard")	2004	European Telecommunications Standards Institute	European Telecommunications Standards Institute
ETSI TS 123 140 V3.0.1 (2000-03), Technical Specification	2000	ETSI	ETSI
Finding, Using, and Surviving Newsgroups on the Internet (1995)	1995	Bryan Pfaffenberger	Addison-Wesley Publishing Company
Hansmann_Pervasive Computing Handbook (2001)	2001	Uwe Hansmann, Lothar Merk, Martin S. Nicklous, Thomas Stober	Springer-Verlag Berlin Heidelberg New York
HTML Web Publisher's Construction Kit	1995	David Fox, Troy Downing	Waite Group Press
i-mode Developer's Guide	April 2002	Paul Wallace, Andrea Hoffmann, Daniel Scuka, Zeva Blut, Kyle Barrow	Addison-Wesley Professional

Title	Publication Date	Author	Publisher
IMPP: A New Instant Messaging Standard and Its Impact on Internet Business	December 2000	Youji Kohda, Hiroyasu Sugano, Satoshi Okuyama	Fujitsu Sci. Tech. J.
Instant Messaging with Mobile Phones to Support Awareness	2001	Madoka Mitsuoka, Satoru Watanabse, Jun Kakuta, Satoshi Okuyama	IEEE
Java and XSLT	September 2001	Eric M. Burke	O'Reilly
Kaashoek, Dynamic Documents - Mobile Wireless Access to the WWW	1995	M. Frans Kaashoek, Tom Pinckney, Joshua A. Tauber	IEEE
Marketing without Wires: Targeting Promotions and Advertising to Mobile Device Users	June 24, 1905	Kim M. Bayne	John Wiley & Soncs, Inc.
May, Mobile Commerce	2010	Paul May, Faisal Hoque, Chris Bennett	Cambridge University Press
mMode Mag Fall-Winter 2003	2003	AT&T Wireless	AT&T Wireless
mMode Mag, Summer-Fall 2002	2002	AT&T Wireless	AT&T Wireless
Mobile Macromedia Flash MX	2003	Alan Yeung, Nicholas Pang	The McGraw-Hill Companies
Nedeltchev, Wireless Local Area Networks and the 802.11 Standard	March 31, 2002	Plamen Nedeltchev	
Neibauer, How to Do Everything with Yahoo!	2000	Alan Neibauer	The McGraw-Hill Companies
Nokia 9210i Communicator User's Guide ("Nokia 9210 User Guide")	2000	Nokia Corp.	
Operating System Concepts, Fourth Edition	September 2001	Abraham Silberschatz, Peter B. Galvin	Addison-Wesley Publishing Company

Title	Publication Date	Author	Publisher
PC Magazine, 20th Anniversary of the PC	September 4, 2001	PC Magazine	PC Magazine
PocketPC Magazine, January 2001	January 2001		PocketPC Magazine
PocketPC Magazine, January 2002	January 2002		PocketPC Magazine
PocketPC Magazine, January/February 2000	January/February 2000		PocketPC Magazine
PocketPC Magazine, July 2001	July 2001		PocketPC Magazine
PocketPC Magazine, July/August 2000	July/August 2000		PocketPC Magazine
PocketPC Magazine, March 2001	March 2001		PocketPC Magazine
PocketPC Magazine, March 2002	March 2002		PocketPC Magazine
PocketPC Magazine, March/April 2000	March/April 2000		PocketPC Magazine
PocketPC Magazine, May 2001	May 2001		PocketPC Magazine
PocketPC Magazine, May 2002	May 2002		PocketPC Magazine
PocketPC Magazine, May/June 2000	May/June 2000		PocketPC Magazine
PocketPC Magazine, November 2000	November 2000		PocketPC Magazine
PocketPC Magazine, November 2001	November 2001		PocketPC Magazine
PocketPC Magazine, September 2001	September 2001		PocketPC Magazine
Quick Install Guide WL110 Wireless PC Card	February 2001	Compaq Computer Corporation	Compaq Computer Corporation
Reference Architecture for Mobile Internet Service Platform	May 2002	Christopher J. Pavlovski	Proceedings of the 2nd Asian International Mobile Computing Conference (AMOC 2002)
Sams Teach Yourself Web Publishing with HTML 4 in 21 Days	2000	Laura Lemay	Sams Publishing

Title	Publication Date	Author	Publisher
Symbian OS Communications Programming ("Jipping")	2002	Michael J. Jipping	John Wiley & Sons, LTD
T68i-T68ie White Paper	April 2002	Sony Ericsson Mobile Communications AB	Sony Ericsson Mobile Communications AB
Tenets of Design for Information Exchange for Boredom Relief in Passengers on Long Airport Layovers Using Handheld Devices ("Gargeshwari")	2001	Malini Rao Raghunatha Rao Gargeshwari	Michigan State University
The Active Streams Approach to Adaptive Distributed Applications and Services	November 2001	Fabian E. Bustamante	Georgia Institute of Technology
The Chat Chapter -- from the Newbie's Guide to The Microsoft Network	1995	Michael Lehman	Albion
The Essential Guide to Telecommunications	2002	Annabel Z. Dodd	Prentice-Hall PTR
The Handheld Web: How Mobile Wireless Technologies Will Change Web-Based Instruction and Training	September-October 2000	Paul G. Shotsberger, Ronald Vetter	Educational Technology Publications, Inc.
Thinkpad_IBM.com	2001	IBM	IBM
WebExpress - A System for Optimizing Web Browsing in a Wireless Environment - Mobicom - 236387.236416	1996	Barron C. Housel, David B. Lindquist	ACM

Title	Publication Date	Author	Publisher
Wireless Application Protocol Architecture Specification WAP-210-WAPArch-20010712	July 12, 2001	Wireless Application Protocol Forum Ltd.	Wireless Application Protocol Forum Ltd.
Wireless Application Protocol WAP-259-WDP-20010614-a	June 14, 2001	Wireless Application Protocol Forum, Ltd.	Wireless Application Protocol Forum, Ltd.
Wireless Java for Symbian devices	2001	Jonathan Allin	John Wiley & Sons, LTD
Getting Started With The Cassiopeia (Hardware Manual)		Casio	Casio
Pocket PC User's Guide	2000	Casio	Casio
iPAQnet Mobility Solutions Flyer (SAM-MDT-0095355-356)	2001	Compaq	Compaq

Defendants further incorporate by reference all "U.S. Patent Documents," "Foreign Patent Documents," and "Other Publications" cited on the face of the Asserted Patents. Any citation to one or more of the above prior art references, or other prior art references regarding any method or system, should be construed to constitute not only a citation to the prior art reference itself, but also a reference to the system itself. Discovery has only just begun in this case, and Defendants will supplement if and when more information becomes available from Plaintiff or third parties.

B. Prior Art Systems and/or Knowledge

Table 3: Prior Art Systems and Inventions for the Asserted Patents

Name of System or Invention	Date of Sale/Offer for Sale/Public Use
Blackboard (*See* A3, B3, C3, D3, E3)	Prior to June 18, 2002 and June 18, 2001

Event411 (*See* A5, B5, C5, D5, E5)	Prior to June 18, 2002 and June 18, 2001
Evite (*See* A6, B6, C6, D6, E6)	Prior to June 18, 2002 and June 18, 2001
LiveJournal (*See* A10, B10, C10, D10, E10)	Prior to June 18, 2002 and June 18, 2001
Yahoo! (*See* A15, B15, C15, D15, E15)	Prior to June 18, 2002 and June 18, 2001
Casio Cassiopeia E-125 System (*See* A20, B20, C20, D20, E20)	Prior to June 18, 2002 and June 18, 2001
Compaq iPAQ System (*See* A21, B21, C21, D21, E21)	Prior to June 18, 2002 and June 18, 2001
mMode System (*See* A22, B22, C22, D22, E22)	Prior to June 18, 2002 and June 18, 2001
Nokia 9210 System (*See* A23, B23, C23, D23, E23)	Prior to June 18, 2002 and June 18, 2001

For each of the prior art devices identified above, Defendants have listed and produced documents as evidence of the relevant features and functionality to the extent that they are presently available and have been located. Defendants have obtained or are in the process of attempting to obtain the identified devices and have made or will make them available for inspection to the extent they are obtained. To the extent that one or more documents (e.g., user manual) may be used to describe aspects of a particular device, that device is a single reference for prior art purposes under pre-AIA 35 U.S.C. § 102. Some or all of the corroborating references may also separately qualify as prior art publications under pre-AIA 35 U.S.C. § 102 and may be used as invalidating references under pre-AIA 35 U.S.C. §§ 102 and/or 103. Further, Defendants are actively searching for information regarding at least the systems, devices, and/or inventions listed above in Table 3.

Discovery is ongoing, and Defendants may serve third parties with document subpoenas, and Defendants reserve the right to rely on documents produced by them. One or more of these devices, along with related documentation, may be invalidating, and Defendants reserve the right to supplement these contentions accordingly. Defendants continue to investigate any identified devices, including through potential discovery needed to be obtained via third party subpoenas, and reserve the right to supplement these contentions and accompanying claim charts after further investigation.

Upon information and belief, the systems were publicly disclosed, used, sold, or offered for sale in the United States before the alleged priority date of the Asserted Patents. Defendants' investigation of such prior art systems is still ongoing and discovery has not yet been received from third parties who may have information concerning such prior art systems. Accordingly, subsequent discovery may reveal information that affects the disclosures and contentions herein. For example, subsequent discovery may provide additional information regarding whether or not any of the third-party prior art systems anticipate or render obvious the Asserted Patents. As such, Defendants reserve all rights to supplement their invalidity contentions.

Many of the inventive, research, design, and development activities concerning these systems and technologies occurred in the United States before the alleged priority date of the Asserted Patents. Defendants have obtained, and are in the process of obtaining, additional information regarding the dates by which the cited products and services were publicly disclosed, used, sold, or offered for sale, the circumstances under which the research, design, and development activities were conducted, and the identities of the individuals involved in such activities through publicly available patents, publications, and product literature. The actual dates, circumstances, and identities of individuals will be the subject of third-party discovery during this lawsuit, which Defendants reserve the right to rely upon to corroborate the prior art status of the prior art identified herein. Defendants reserve the right to modify, amend, or supplement these contentions if additional information becomes available during

this lawsuit. Furthermore, Defendants will make all such devices, software programs, or other products in Defendants' possession, custody, or control available for inspection by Plaintiff. Consequently, Defendants reserve the right to amend, modify, or supplement these Invalidity Contentions should additional information become available to them through discovery.

In addition, Defendants identify, responsive to Plaintiff's Infringement Contentions, the patents, publications, and/or systems listed in Exhibits A1-A23, B1-B23, C1-C23, D1-D23, E1-E23 as evidence of the state of the art as it relates to network-based communication systems, content management on mobile devices, and wireless networking capabilities. Exhibits A1-A23, B1-B23, C1-C23, D1-D23, E1-E23 show that the concepts of network-based communication systems, content management on mobile devices, and wireless networking capabilities were well-known before the alleged priority date of the Asserted Patents, as discussed in more detail in Section IV.B. In light of the references discussed herein, the Asserted Patents cannot be valid.

Each prior art patent, publication, or product identified above was patented, described in a printed publication, or in public use, on sale, or otherwise available to the public before the effective filing date of the Asserted Patents, or was described in a patent issued under section 151, or in an application for patent published or deemed published under section 122(b), in which the patent or application, as the case may be, names another inventor and was effectively filed before the effective filing date of the claimed invention.

Because Defendants have not yet completed discovery in this case, including taking depositions of the named inventors, and otherwise obtaining discovery from Plaintiff and third parties, Defendants reserve the right to supplement these contentions with facts, documents, or other information learned at a later point through discovery or further investigation.

C. Prior Art Under 35 U.S.C. §§ 102(f) and 102(g)

Each prior art patent, publication, or product identified above was either effectively filed or issued (for patents), published (for publications) or known, used, offered for sale or sold (for products) before the earliest claimed priority date of the Asserted Patents to which it is applied for invalidity, and none was abandoned, suppressed, or concealed, so each such reference also constitutes evidence of prior invention pursuant to 35 U.S.C. § 102(g), if it is in the U.S. The persons or entities involved with each such invention include the named inventors on the above-identified patents, the authors listed on the above-identified publications, and the entities and individuals identified in connection with the above-identified products.

Because Samsung has not yet completed discovery in this case, including taking depositions of the named inventors of the Asserted Patents, reviewing MDT's productions, and seeking discovery of prior inventions by third parties, Samsung reserves the right to supplement these Contentions with facts, documents, or other information learned at a later point through discovery or further investigation.

IV. P.R. 3-3(B), (C) – INVALIDITY GROUNDS

Pursuant to P.R. 3-3(b), Defendants contend that certain prior art references below anticipate one or more Asserted Claims and that to the extent the identified prior art references do not anticipate the Asserted Claims, those claims are invalid as obvious under 35 U.S.C. §103. Each anticipatory prior art reference, either alone or in combination with other prior art, also renders the Asserted Claims invalid as obvious. In particular, each anticipatory prior art reference may be combined with (1) information generally known to persons skilled in the art at the time of the alleged invention, and/or (2) any of the other identified prior art references. To the extent that Plaintiff contends that any of the anticipatory prior art fails to disclose one or more limitations of the Asserted Claims, Defendants contend that any difference between the reference and the corresponding patent claims would have

been obvious to one of ordinary skill in the art. Thus, all anticipation charts should be interpreted as both reflecting anticipation by the reference as well as invalidity due to single reference obviousness, to the extent that Plaintiff contends that any limitation is missing.

Defendants have identified relevant portions and/or features of the prior art. However, the identified prior art may contain additional descriptions of or alternative support for the claim limitations. Defendants may rely on uncited portions or features of the identified prior art, other documents, and expert testimony, to provide context or to aid in understanding the identified prior art and the state of the art. Citations to a particular figure in a reference include the caption and description of the figure and any text relating to the figure. Similarly, citations to particular text referring to a figure include the figure and caption as well. Portions relevant to dependent claims incorporate by reference the citations to the chain of claims from which that dependent claim derives. Likewise, portions related to subsequent limitations that refer to claim elements identified, described, and/or cited to in earlier limitations may rely on the citations related to those portions of the claim chart that identify and/or describe these elements.

Throughout the invalidity claim charts in Exhibits A1-A23, B1-B23, C1-C23, D1-D23, E1-E23, pursuant to Rule 3-3(c), Defendants provide exemplary citations showing where references disclose subject matter recited in preambles of the Asserted Claims, regardless of whether the preambles limit the claims. Defendants reserve the right to argue that the preambles are or are not limitations. Further, where an entry in a claim chart corresponding to a given limitation refers back to the discussion of another claim, the entry incorporates all evidence cited for the other claim.

As noted above, the asserted claims have not yet been construed. Additional portions of the references may become relevant after claim construction. Defendants' contentions are based on the information presently available, and Defendants reserve all rights to provide their claim construction positions in accordance with the Docket Control Order in this case.

A. Anticipation

As stated above, Defendants incorporate by reference all other invalidity contentions related to the Asserted Patents served on or otherwise provided to Plaintiff, whether past or future. In accordance with P.R. 3-3(a), prior art references anticipating the Asserted Claims are provided below. The prior art listed below anticipates the Asserted Claims under the proper construction of the claims and/or under Plaintiff's apparent interpretation of the claims reflected by Plaintiff's First Amended Complaint and Infringement Contentions.

1. U.S. Patent No. 8,793,336

The Asserted Claims of the '336 patent are anticipated and/or rendered obvious by prior art. Pursuant to P.R. 3-3(a), Defendants identify the prior art references that anticipate or render obvious the '336 patent Asserted Claims in the claim charts Exhibits A1-A23 which is hereby incorporated by reference as if fully set forth herein. The claim charts Exhibits A1-A23 show how these prior art references teach or suggest each and every element of the '336 patent Asserted Claims. For each reference or combination of references suggested by each chart and/or herein, Defendants indicate whether the prior art renders the claim anticipated and/or obvious pursuant to P.R. 3-3(b).

Exhibit	Prior Art References
A1	U.S. Patent No. 6,988,138 to Robert L. Alcorn et al. ("Alcorn")
A2	International Patent Publication No. WO 02/03243 to Daniel Austin, et al. ("Austin")
A3	Blackboard System ("Blackboard")
A4	U.S. Patent No. 7,984,098 to Noel Enete, et al. ("Enete")
A5	Event411 System ("Event411")
A6	Evite.com System ("Evite")
A7	U.S. Patent Application Pub. No. 2003/0046134 to Harry A. Frolick et al. ("Frolick")
A8	U.S. Patent No. 6,519,629 to Jamey Harvey et al. ("Harvey")
A9	U.S. Patent Application Publication No. 2002/0156787 to Daniel E. Jameson et al. ("Jameson")
A10	LiveJournal system ("LiveJournal")
A11	U.S. Patent Application Publication No. 2005/0055306 to Craig Miller et al. ("Miller")
A12	U.S. Patent No. 6,813,474 to Torrance Robinson et al. ("Robinson")

A13	U.S. Patent No. 8,015,049 to Tommy H. Tam et al. ("Tam")
A14	U.S. Patent No. 7,668,913 to John Underwood et al. ("Underwood")
A15	The Yahoo! System ("Yahoo") and/or Neibauer
A16	U.S. Patent No. 7,047,030 to Forsyth ("Forsyth") and WO 02/17652 to Randall, et al. ("Randall")
A17	U.S. Patent Application Publication No. 2002/0023132 to Tornabene et al. ("Tornabene")
A18	U.S. Patent Application Publication No. 2003/0037110 to Yamamoto ("Yamamoto")
A19	U.S. Patent No. 6,716,103 to Eck et. al. ("Eck") and U.S. Patent No. 7,056,217 to Pelkey et al. ("Pelkey")
A20	Casio Cassiopeia E-125 System
A21	Compaq iPAQ System
A22	mMode System
A23	Nokia 9210 System

The prior art identified above, and in Exhibits A1-A23 individually anticipate and/or can be properly combined in multiple ways to demonstrate the obviousness of the Asserted Claims of the '336 patent. Various combinations of the references would have naturally been considered as part of the exercise of ordinary skill by one skilled in the art. The references disclosed in the attached charts and herein are also directed to the same or similar features as the purported invention claimed in the Asserted Claims of the '336 patent. To the extent Plaintiff contends that any of these features solved a problem in the art, the references cited herein show that that problem was known to those of ordinary skill and had already been solved using obvious solutions.

To that end, the Asserted Claims of the '336 patent simply combine elements already combined and well known in the art and yield no more than what one skilled in the art would have expected from such a combination. For example, with respect to the '336 patent, when confronted with the alleged problems described in the '336 patent, one of ordinary skill in the art at the time of the alleged inventions would have been motivated to consider the techniques taught by the prior art cited in these Invalidity Contentions. Consideration of the teachings of this prior art, both individually and in combination, would necessarily lead to the alleged invention claimed in the '336 patent. This

is demonstrated by the cited prior art, which disclose all of the elements of the Asserted Claims of the ’336 patent, as well as motivations to modify or combine their individual teachings. One of skill in the art would have been motivated to either modify the prior art identified in the claim charts or to combine that prior art in the manner indicated, by, for example, their background knowledge, design incentives, effects of demands known to the design community, or other market forces. Moreover, the cited prior art share commonalities. To the extent it is argued that any cited prior art does not expressly disclose a particular claim or element, it would have been inherent in the disclosure and/or obvious to a person of ordinary skill in the art to include the claimed element to perform the invention as claimed in the ’336 patent.

As described in the attached charts, all the elements of the Asserted Claims of the ’336 patent were commonplace before the alleged date of inventions. For each element, there exists evidence from the cited prior art that it was well known in the art prior to the date of invention. To the extent it is argued any of the cited prior art references, systems, and/or products do not anticipate the Asserted Claims, it would have been obvious to a person of ordinary skill in the art that the Asserted Claims are merely combinations of well-known methods and systems resulting in expected results.

Additionally, Defendants hereby incorporate by reference the motivations to combine references set forth during the prosecution of the Asserted Claims of the ’336 patent, including the statements and reasoning set forth by the examiner, as to why it would have been obvious to modify or combine references to achieve the limitations of the Asserted Claims of the ’336 patent.

In addition to contending that the ’336 patent Asserted Claims are invalid in view of the prior art references cited in the claim charts of Exhibits A1-A23, Defendants further content that the ’336 patent Asserted Claims are invalid as anticipated and/or obvious under U.S.C. §§ 102 and/or 103 in view of public knowledge and uses and/or offers for sale of products and services related to the subject matter of the cited references. As discovery is ongoing, Defendants continue to investigate these

items and to reserve the right to amend or supplement these contentions to include additional information or documents regarding such products and/or systems. In addition to contending that the ’336 patent Asserted Claims are invalid in view of the explicit disclosures of the prior art references cited in the claim charts of Exhibits A1-A23, Defendants further contend that the knowledge of skill evidenced by those references render those claims invalid. Defendants further contend that, even if a prior art reference does not expressly disclose all limitations as arranged or combined in the same manner as an asserted claim, a skilled artisan reading the reference would at once envisage the claimed arrangement or combination. *See, e.g., Kennametal Inc. v. Ingersoll Cutting Tool Co.*, 780 F.3d 1376, 1381 (Fed. Cir. 2015).

Defendants’ reference to a particular device or product in the claim charts of Exhibits A1-A23 should be interpreted alternatively as both as a reference to the product itself and to any corresponding patents, publications, or product literature cited in Exhibits A1-A23 that relates to the cited device or product. In addition, Defendants may rely on other documents or things that have not yet been located to support its contentions regarding such prior art device(s) or product(s) that are referenced in the charts.

Defendants incorporate by reference, as if set forth fully herein, all prior art cited during the prosecution of the ’336 patent, all prior art cited during any reexamination proceedings of the ’336 patent, all prior art as described in any pending or future *inter partes* review proceedings of the ’336 patent, and all prior art disclosed during any previous litigation proceedings or proceedings involving the ’336 patent or any related patents.

Defendants further identify and hereby incorporate by reference as if set forth fully herein the prior art references and invalidity contentions as described in any Other Proceedings wherein invalidity contentions have been, or will be, provided regarding the ’336 patent, its foreign counterparts, or any parent or child patent of the ’336 patent, including the N.D. Cal. Action.

Defendants reserve the right to use any and all portions of the publication, related publications, commercial embodiments of the publication, and other evidence that is discovered in these lawsuits to demonstrate and/or evidence the components, functionality, and capabilities of the devices and systems disclosed in the references charted.

Where Defendants identify a particular figure in a prior art reference, the identification should be understood to encompass the caption and description of the figure, as well as any text relating to the figure in addition to the figure itself. Similarly, where an identified portion of text refers to a figure, embodiment, or other material, the identification should be understood to include the referenced figure, embodiment, or other material as well. Consistent with P.R. 3-3(c), Defendants' citations to specific statements, figures, or disclosures in a prior art reference are sufficient to put Plaintiff on notice where each element of each Asserted Claim is found in the prior art. However, it should be recognized that a person of ordinary skill in the art would generally read a prior art reference as a whole and in the context of other publications, literature, and general knowledge in the field. To understand and interpret any specific statement or disclosure in a prior art reference, a person of ordinary skill in the art would rely upon other information including other publications and general scientific or engineering knowledge. Defendants therefore reserve the right to rely upon other unidentified portions of the prior art references and on other publications and expert testimony to provide context and to aid understanding and interpretation of the identified portions.

Defendants also reserve the right to rely upon other portions of the prior art references, other publications, and the testimony of experts to establish that the alleged inventions would have been obvious to a person of ordinary skill in the art, including the basis of modifying or combining certain cited references. To the extent any limitation is deemed not to be exactly met by an item of prior art, then any purported differences are such that the claimed subject matter as a whole would have been obvious to one skilled in the art at the time of the alleged invention, in view of the state of the art and

knowledge of those skilled in the art. To the extent that an element of an Asserted Claim is not anticipated, the claim is rendered obvious by combination with one or more other prior art references identified in Exhibits A1-A23.

2. U.S. Patent No. 8,825,801

The Asserted Claims of the ’801 patent are anticipated and/or rendered obvious by prior art. Pursuant to P.R. 3-3(a), Defendants identify the prior art references that anticipate or render obvious the ’801 patent Asserted Claims in the claim charts Exhibits B1-B23 which is hereby incorporated by reference as if fully set forth herein. The claim charts of Exhibits B1-B23 show how these prior art references teach or suggest each and every element of the ’801 patent Asserted Claims. For each reference or combination of references suggested by each chart and/or herein, Defendants indicate whether the prior art renders the claim anticipated and/or obvious pursuant to P.R. 3-3(b).

Exhibit	Prior Art References
B1	U.S. Patent No. 6,988,138 to Robert L. Alcorn et al. (“Alcorn”)
B2	International Patent Publication No. WO 02/03243 to Daniel Austin, et al. (“Austin”)
B3	Blackboard System (“Blackboard”)
B4	U.S. Patent No. 7,984,098 to Noel Enete, et al. (“Enete”)
B5	Event411 System (“Event411”)
B6	Evite.com System (“Evite”)
B7	U.S. Patent Application Pub. No. 2003/0046134 to Harry A. Frolick et al. (“Frolick”)
B8	U.S. Patent No. 6,519,629 to Jamey Harvey et al. (“Harvey”)
B9	U.S. Patent Application Publication No. 2002/0156787 to Daniel E. Jameson et al. (“Jameson”)
B10	LiveJournal system (“LiveJournal”)
B11	U.S. Patent Application Publication No. 2005/0055306 to Craig Miller et al. (“Miller”)
B12	U.S. Patent No. 6,813,474 to Torrance Robinson et al. (“Robinson”)
B13	U.S. Patent No. 8,015,049 to Tommy H. Tam et al. (“Tam”)
B14	U.S. Patent No. 7,668,913 to John Underwood et al. (“Underwood”)
B15	The Yahoo! System (“Yahoo”) and/or Neibauer
B16	U.S. Patent No. 7,047,030 to Forsyth (“Forsyth”) and WO 02/17652 to Randall, et al. (“Randall”)
B17	U.S. Patent Application Publication No. 2002/0023132 to Tornabene et al. (“Tornabene”)
B18	U.S. Patent Application Publication No. 2003/0037110 to Yamamoto (“Yamamoto”)
B19	U.S. Patent No. 6,716,103 to Eck et. al. (“Eck”) and U.S. Patent No. 7,056,217 to Pelkey et al. (“Pelkey”)

B20	Casio Cassiopeia E-125 System
B21	Compaq iPAQ System
B22	mMode System
B23	Nokia 9210 System

The prior art identified above, and in Exhibits B1-B23. individually anticipate and/or can be properly combined in multiple ways to demonstrate the obviousness of the Asserted Claims of the ’801 patent. Various combinations of the references would have naturally been considered as part of the exercise of ordinary skill by one skilled in the art. The references disclosed in the attached charts and herein are also directed to the same or similar features as the purported invention claimed in the Asserted Claims of the ’801 patent. To the extent Plaintiff contends that any of these features solved a problem in the art, the references cited herein show that that problem was known to those of ordinary skill and had already been solved using obvious solutions.

To that end, the Asserted Claims of the ’801 patent simply combine elements already combined and well known in the art and yield no more than what one skilled in the art would have expected from such a combination. For example, with respect to the ’801 patent, when confronted with the alleged problems described in the ’801 patent, one of ordinary skill in the art at the time of the alleged inventions would have been motivated to consider the techniques taught by the prior art cited in these Invalidity Contentions. Consideration of the teachings of this prior art, both individually and in combination, would necessarily lead to the alleged invention claimed in the ’801 patent. This is demonstrated by the cited prior art, which disclose all of the elements of the Asserted Claims of the ’801 patent, as well as motivations to modify or combine their individual teachings. One of skill in the art would have been motivated to either modify the prior art identified in the claim charts or to combine that prior art in the manner indicated, by, for example, their background knowledge, design incentives, effects of demands known to the design community, or other market forces. Moreover, the cited prior art share commonalities. To the extent it is argued that any cited prior art does not

expressly disclose a particular claim or element, it would have been inherent in the disclosure and/or obvious to a person of ordinary skill in the art to include the claimed element to perform the invention as claimed in the ’801 patent.

As described in the attached charts, all the elements of the Asserted Claims of the ’801 patent were commonplace before the alleged date of inventions. For each element, there exists evidence from the cited prior art that it was well known in the art prior to the date of invention. To the extent it is argued any of the cited prior art references, systems, and/or products do not anticipate the Asserted Claims, it would have been obvious to a person of ordinary skill in the art that the Asserted Claims are merely combinations of well-known methods and systems resulting in expected results.

Additionally, Defendants hereby incorporate by reference the motivations to combine references set forth during the prosecution of the Asserted Claims of the ’801 patent, including the statements and reasoning set forth by the examiner, as to why it would have been obvious to modify or combine references to achieve the limitations of the Asserted Claims of the ’801 patent.

In addition to contending that the ’801 patent Asserted Claims are invalid in view of the prior art references cited in the claim charts of Exhibits B1-B23, Defendants further content that the ’801 patent Asserted Claims are invalid as anticipated and/or obvious under U.S.C. §§ 102 and/or 103 in view of public knowledge and uses and/or offers for sale of products and services related to the subject matter of the cited references. As discovery is ongoing, Defendants continue to investigate these items and to reserve the right to amend or supplement these contentions to include additional information or documents regarding such products and/or systems. In addition to contending that the ’801 patent Asserted Claims are invalid in view of the explicit disclosures of the prior art references cited in the claim charts of Exhibits B1-B23, Defendants further contend that the knowledge of skill evidenced by those references render those claims invalid. Defendants further contend that, even if a prior art reference does not expressly disclose all limitations as arranged or combined in the same

manner as an asserted claim, a skilled artisan reading the reference would at once envisage the claimed arrangement or combination. *See, e.g., Kennametal Inc. v. Ingersoll Cutting Tool Co.*, 780 F.3d 1376, 1381 (Fed. Cir. 2015).

Defendants' reference to a particular device or product in the claim charts of Exhibits B1-B23 should be interpreted alternatively as both as a reference to the product itself and to any corresponding patents, publications, or product literature cited in Exhibits B1-B23 that relates to the cited device or product. In addition, Defendants may rely on other documents or things that have not yet been located to support its contentions regarding such prior art device(s) or product(s) that are referenced in the charts.

Defendants incorporate by reference, as if set forth fully herein, all prior art cited during the prosecution of the '801 patent, all prior art cited during any reexamination proceedings of the '801 patent, all prior art as described in any pending or future *inter partes* review proceedings of the '801 patent, and all prior art disclosed during any previous litigation proceedings or proceedings involving the '801 patent or any related patents.

Defendants further identify and hereby incorporate by reference as if set forth fully herein the prior art references and invalidity contentions as described in any Other Proceedings wherein invalidity contentions have been, or will be, provided regarding the '801 patent, its foreign counterparts, or any parent or child patent of the '801 patent, including the N.D. Cal. Action. Defendants reserve the right to use any and all portions of the publication, related publications, commercial embodiments of the publication, and other evidence that is discovered in these lawsuits to demonstrate and/or evidence the components, functionality, and capabilities of the devices and systems disclosed in the references charted.

Where Defendants identify a particular figure in a prior art reference, the identification should be understood to encompass the caption and description of the figure, as well as any text relating to

the figure in addition to the figure itself. Similarly, where an identified portion of text refers to a figure, embodiment, or other material, the identification should be understood to include the referenced figure, embodiment, or other material as well. Consistent with P.R. 3-3(c), Defendants' citations to specific statements, figures, or disclosures in a prior art reference are sufficient to put Plaintiff on notice where each element of each Asserted Claim is found in the prior art. However, it should be recognized that a person of ordinary skill in the art would generally read a prior art reference as a whole and in the context of other publications, literature, and general knowledge in the field. To understand and interpret any specific statement or disclosure in a prior art reference, a person of ordinary skill in the art would rely upon other information including other publications and general scientific or engineering knowledge. Defendants therefore reserve the right to rely upon other unidentified portions of the prior art references and on other publications and expert testimony to provide context and to aid understanding and interpretation of the identified portions.

Defendants also reserve the right to rely upon other portions of the prior art references, other publications, and the testimony of experts to establish that the alleged inventions would have been obvious to a person of ordinary skill in the art, including the basis of modifying or combining certain cited references. To the extent any limitation is deemed not to be exactly met by an item of prior art, then any purported differences are such that the claimed subject matter as a whole would have been obvious to one skilled in the art at the time of the alleged invention, in view of the state of the art and knowledge of those skilled in the art. To the extent that an element of an Asserted Claim is not anticipated, the claim is rendered obvious by combination with one or more other prior art references identified in Exhibits B1-B23.

3. U.S. Patent No. 9,032,039

The Asserted Claims of the '039 patent are anticipated and/or rendered obvious by prior art. Pursuant to P.R. 3-3(a), Defendants identify the prior art references that anticipate or render obvious

the ’039 patent Asserted Claims in the claim charts Exhibits C1-C23 which is hereby incorporated by reference as if fully set forth herein. The claim charts of Exhibits C1-C23 show how these prior art references teach or suggest each and every element of the ’039 patent Asserted Claims. For each reference or combination of references suggested by each chart and/or herein, Defendants indicate whether the prior art renders the claim anticipated and/or obvious pursuant to P.R. 3-3(b).

Exhibit	Prior Art References
C1	U.S. Patent No. 6,988,138 to Robert L. Alcorn et al. (“Alcorn”)
C2	International Patent Publication No. WO 02/03243 to Daniel Austin, et al. (“Austin”)
C3	Blackboard System (“Blackboard”)
C4	U.S. Patent No. 7,984,098 to Noel Enete, et al. (“Enete”)
C5	Event411 System (“Event411”)
C6	Evite.com System (“Evite”)
C7	U.S. Patent Application Pub. No. 2003/0046134 to Harry A. Frolick et al. (“Frolick”)
C8	U.S. Patent No. 6,519,629 to Jamey Harvey et al. (“Harvey”)
C9	U.S. Patent Application Publication No. 2002/0156787 to Daniel E. Jameson et al. (“Jameson”)
C10	LiveJournal system (“LiveJournal”)
C11	U.S. Patent Application Publication No. 2005/0055306 to Craig Miller et al. (“Miller”)
C12	U.S. Patent No. 6,813,474 to Torrance Robinson et al. (“Robinson”)
C13	U.S. Patent No. 8,015,049 to Tommy H. Tam et al. (“Tam”)
C14	U.S. Patent No. 7,668,913 to John Underwood et al. (“Underwood”)
C15	The Yahoo! System (“Yahoo”) and/or Neibauer
C16	U.S. Patent No. 7,047,030 to Forsyth (“Forsyth”) and WO 02/17652 to Randall, et al. (“Randall”)
C17	U.S. Patent Application Publication No. 2002/0023132 to Tornabene et al. (“Tornabene”)
C18	U.S. Patent Application Publication No. 2003/0037110 to Yamamoto (“Yamamoto”)
C19	U.S. Patent No. 6,716,103 to Eck et. al. (“Eck”) and U.S. Patent No. 7,056,217 to Pelkey et al. (“Pelkey”)
C20	Casio Cassiopeia E-125 System
C21	Compaq iPAQ System
C22	mMode System
C23	Nokia 9210 System

The prior art identified above, and in Exhibits C1-C23, individually anticipate and/or can be properly combined in multiple ways to demonstrate the obviousness of the Asserted Claims of the ’039 patent. Various combinations of the references would have naturally been considered as part of the exercise of ordinary skill by one skilled in the art. The references disclosed in the attached charts and herein are also directed to the same or similar features as the purported invention claimed in the Asserted Claims of the ’039 patent. To the extent Plaintiff contends that any of these features solved a problem in the art, the references cited herein show that that problem was known to those of ordinary skill and had already been solved using obvious solutions.

To that end, the Asserted Claims of the ’039 patent simply combine elements already combined and well known in the art and yield no more than what one skilled in the art would have expected from such a combination. For example, with respect to the ’039 patent, when confronted with the alleged problems described in the ’039 patent, one of ordinary skill in the art at the time of the alleged inventions would have been motivated to consider the techniques taught by the prior art cited in these Invalidity Contentions. Consideration of the teachings of this prior art, both individually and in combination, would necessarily lead to the alleged invention claimed in the ’039 patent. This is demonstrated by the cited prior art, which disclose all of the elements of the Asserted Claims of the ’039 patent, as well as motivations to modify or combine their individual teachings. One of skill in the art would have been motivated to either modify the prior art identified in the claim charts or to combine that prior art in the manner indicated, by, for example, their background knowledge, design incentives, effects of demands known to the design community, or other market forces. Moreover, the cited prior art share commonalities. To the extent it is argued that any cited prior art does not expressly disclose a particular claim or element, it would have been inherent in the disclosure and/or obvious to a person of ordinary skill in the art to include the claimed element to perform the invention as claimed in the ’039 patent.

As described in the attached charts, all the elements of the Asserted Claims of the ’039 patent were commonplace before the alleged date of inventions. For each element, there exists evidence from the cited prior art that it was well known in the art prior to the date of invention. To the extent it is argued any of the cited prior art references, systems, and/or products do not anticipate the Asserted Claims, it would have been obvious to a person of ordinary skill in the art that the Asserted Claims are merely combinations of well-known methods and systems resulting in expected results.

Additionally, Defendants hereby incorporate by reference the motivations to combine references set forth during the prosecution of the Asserted Claims of the ’039 patent, including the statements and reasoning set forth by the examiner, as to why it would have been obvious to modify or combine references to achieve the limitations of the Asserted Claims of the ’039 patent.

In addition to contending that the ’039 patent Asserted Claims are invalid in view of the prior art references cited in the claim charts of Exhibits C1-C23, Defendants further content that the ’039 patent Asserted Claims are invalid as anticipated and/or obvious under U.S.C. §§ 102 and/or 103 in view of public knowledge and uses and/or offers for sale of products and services related to the subject matter of the cited references. As discovery is ongoing, Defendants continue to investigate these items and to reserve the right to amend or supplement these contentions to include additional information or documents regarding such products and/or systems. In addition to contending that the ’039 patent Asserted Claims are invalid in view of the explicit disclosures of the prior art references cited in the claim charts of Exhibits C1-C23, Defendants further contend that the knowledge of skill evidenced by those references render those claims invalid. Defendants further contend that, even if a prior art reference does not expressly disclose all limitations as arranged or combined in the same manner as an asserted claim, a skilled artisan reading the reference would at once envisage the claimed arrangement or combination. *See, e.g., Kennametal Inc. v. Ingersoll Cutting Tool Co.*, 780 F.3d 1376, 1381 (Fed. Cir. 2015).

Defendants' reference to a particular device or product in the claim charts of Exhibits C1-C23 should be interpreted alternatively as both as a reference to the product itself and to any corresponding patents, publications, or product literature cited in Exhibits C1-C23 that relates to the cited device, or product. In addition, Defendants may rely on other documents or things that have not yet been located to support its contentions regarding such prior art device(s) or product(s) that are referenced in the charts.

Defendants incorporate by reference, as if set forth fully herein, all prior art cited during the prosecution of the '039 patent, all prior art cited during any reexamination proceedings of the '039 patent, all prior art as described in any pending or future *inter partes* review proceedings of the '039 patent, and all prior art disclosed during any previous litigation proceedings or proceedings involving the '039 patent or any related patents.

Defendants further identify and hereby incorporate by reference as if set forth fully herein the prior art references and invalidity contentions as described in any Other Proceedings wherein invalidity contentions have been, or will be, provided regarding the '039 patent, its foreign counterparts, or any parent or child patent of the '039 patent, including the N.D. Cal. Action. Defendants reserve the right to use any and all portions of the publication, related publications, commercial embodiments of the publication, and other evidence that is discovered in these lawsuits to demonstrate and/or evidence the components, functionality, and capabilities of the devices and systems disclosed in the references charted.

Where Defendants identify a particular figure in a prior art reference, the identification should be understood to encompass the caption and description of the figure, as well as any text relating to the figure in addition to the figure itself. Similarly, where an identified portion of text refers to a figure, embodiment, or other material, the identification should be understood to include the referenced figure, embodiment, or other material as well. Consistent with P.R. 3-3(c), Defendants'

citations to specific statements, figures, or disclosures in a prior art reference are sufficient to put Plaintiff on notice where each element of each Asserted Claim is found in the prior art. However, it should be recognized that a person of ordinary skill in the art would generally read a prior art reference as a whole and in the context of other publications, literature, and general knowledge in the field. To understand and interpret any specific statement or disclosure in a prior art reference, a person of ordinary skill in the art would rely upon other information including other publications and general scientific or engineering knowledge. Defendants therefore reserve the right to rely upon other unidentified portions of the prior art references and on other publications and expert testimony to provide context and to aid understanding and interpretation of the identified portions.

Defendants also reserve the right to rely upon other portions of the prior art references, other publications, and the testimony of experts to establish that the alleged inventions would have been obvious to a person of ordinary skill in the art, including the basis of modifying or combining certain cited references. To the extent any limitation is deemed not to be exactly met by an item of prior art, then any purported differences are such that the claimed subject matter as a whole would have been obvious to one skilled in the art at the time of the alleged invention, in view of the state of the art and knowledge of those skilled in the art. To the extent that an element of an Asserted Claim is not anticipated, the claim is rendered obvious by combination with one or more other prior art references identified in Exhibits C1-C23.

4. U.S. Patent No. 9,619,578

The Asserted Claims of the ’578 patent are anticipated and/or rendered obvious by prior art. Pursuant to P.R. 3-3(a), Defendants identify the prior art references that anticipate or render obvious the ’578 patent Asserted Claims in the claim charts Exhibits D1-D23 which is hereby incorporated by reference as if fully set forth herein. The claim charts of Exhibits D1-D23 show how these prior art references teach or suggest each and every element of the ’578 patent Asserted Claims. For each

reference or combination of references suggested by each chart and/or herein, Defendants indicate whether the prior art renders the claim anticipated and/or obvious pursuant to P.R. 3-3(b).

Exhibit	Prior Art References
D1	U.S. Patent No. 6,988,138 to Robert L. Alcorn et al. ("Alcorn")
D2	International Patent Publication No. WO 02/03243 to Daniel Austin, et al. ("Austin")
D3	Blackboard System ("Blackboard")
D4	U.S. Patent No. 7,984,098 to Noel Enete, et al. ("Enete")
D5	Event411 System ("Event411")
D6	Evite.com System ("Evite")
D7	U.S. Patent Application Pub. No. 2003/0046134 to Harry A. Frolick et al. ("Frolick")
D8	U.S. Patent No. 6,519,629 to Jamey Harvey et al. ("Harvey")
D9	U.S. Patent Application Publication No. 2002/0156787 to Daniel E. Jameson et al. ("Jameson")
D10	LiveJournal system ("LiveJournal")
D11	U.S. Patent Application Publication No. 2005/0055306 to Craig Miller et al. ("Miller")
D12	U.S. Patent No. 6,813,474 to Torrance Robinson et al. ("Robinson")
D13	U.S. Patent No. 8,015,049 to Tommy H. Tam et al. ("Tam")
D14	U.S. Patent No. 7,668,913 to John Underwood et al. ("Underwood")
D15	The Yahoo! System ("Yahoo") and/or Neibauer
D16	U.S. Patent No. 7,047,030 to Forsyth ("Forsyth") and WO 02/17652 to Randall, et al. ("Randall")
D17	U.S. Patent Application Publication No. 2002/0023132 to Tornabene et al. ("Tornabene")
D18	U.S. Patent Application Publication No. 2003/0037110 to Yamamoto ("Yamamoto")
D19	U.S. Patent No. 6,716,103 to Eck et. al. ("Eck") and U.S. Patent No. 7,056,217 to Pelkey et al. ("Pelkey")
D20	Casio Cassiopeia E-125 System
D21	Compaq iPAQ System
D22	mMode System
D23	Nokia 9210 System

The prior art identified above, and in Exhibits D1-D23, individually anticipate and/or can be properly combined in multiple ways to demonstrate the obviousness of the Asserted Claims of the '578 patent. Various combinations of the references would have naturally been considered as part of the exercise of ordinary skill by one skilled in the art. The references disclosed in the attached charts and herein are also directed to the same or similar features as the purported invention claimed in the

Asserted Claims of the ’578 patent. To the extent Plaintiff contends that any of these features solved a problem in the art, the references cited herein show that that problem was known to those of ordinary skill and had already been solved using obvious solutions.

To that end, the Asserted Claims of the ’578 patent simply combine elements already combined and well known in the art and yield no more than what one skilled in the art would have expected from such a combination. For example, with respect to the ’578 patent, when confronted with the alleged problems described in the ’578 patent, one of ordinary skill in the art at the time of the alleged inventions would have been motivated to consider the techniques taught by the prior art cited in these Invalidity Contentions. Consideration of the teachings of this prior art, both individually and in combination, would necessarily lead to the alleged invention claimed in the ’578 patent. This is demonstrated by the cited prior art, which disclose all of the elements of the Asserted Claims of the ’578 patent, as well as motivations to modify or combine their individual teachings. One of skill in the art would have been motivated to either modify the prior art identified in the claim charts or to combine that prior art in the manner indicated, by, for example, their background knowledge, design incentives, effects of demands known to the design community, or other market forces. Moreover, the cited prior art share commonalities. To the extent it is argued that any cited prior art does not expressly disclose a particular claim or element, it would have been inherent in the disclosure and/or obvious to a person of ordinary skill in the art to include the claimed element to perform the invention as claimed in the ’578 patent.

As described in the attached charts, all the elements of the Asserted Claims of the ’578 patent were commonplace before the alleged date of inventions. For each element, there exists evidence from the cited prior art that it was well known in the art prior to the date of invention. To the extent it is argued any of the cited prior art references, systems, and/or products do not anticipate the Asserted

Claims, it would have been obvious to a person of ordinary skill in the art that the Asserted Claims are merely combinations of well-known methods and systems resulting in expected results.

Additionally, Defendants hereby incorporate by reference the motivations to combine references set forth during the prosecution of the Asserted Claims of the ’578 patent, including the statements and reasoning set forth by the examiner, as to why it would have been obvious to modify or combine references to achieve the limitations of the Asserted Claims of the ’578 patent.

In addition to contending that the ’578 patent Asserted Claims are invalid in view of the prior art references cited in the claim charts of Exhibits D1-D23, Defendants further content that the ’578 patent Asserted Claims are invalid as anticipated and/or obvious under U.S.C. §§ 102 and/or 103 in view of public knowledge and uses and/or offers for sale of products and services related to the subject matter of the cited references. As discovery is ongoing, Defendants continue to investigate these items and to reserve the right to amend or supplement these contentions to include additional information or documents regarding such products and/or systems. In addition to contending that the ’578 patent Asserted Claims are invalid in view of the explicit disclosures of the prior art references cited in the claim charts of Exhibits D1-D23, Defendants further contend that the knowledge of skill evidenced by those references render those claims invalid. Defendants further contend that, even if a prior art reference does not expressly disclose all limitations as arranged or combined in the same manner as an asserted claim, a skilled artisan reading the reference would at once envisage the claimed arrangement or combination. *See, e.g., Kennametal Inc. v. Ingersoll Cutting Tool Co.*, 780 F.3d 1376, 1381 (Fed. Cir. 2015).

Defendants’ reference to a particular device or product in the claim charts of Exhibits D1-D23 should be interpreted alternatively as both as a reference to the product itself and to any corresponding patents, publications, or product literature cited in Exhibits D1-D23 that relates to the cited device or product. In addition, Defendants may rely on other documents or things that have not yet been located

to support its contentions regarding such prior art device(s) or product(s) that are referenced in the charts.

Defendants incorporate by reference, as if set forth fully herein, all prior art cited during the prosecution of the ’578 patent, all prior art cited during any reexamination proceedings of the ’578 patent, all prior art as described in any pending or future *inter partes* review proceedings of the ’578 patent, and all prior art disclosed during any previous litigation proceedings or proceedings involving the ’578 patent or any related patents.

Defendants further identify and hereby incorporate by reference as if set forth fully herein the prior art references and invalidity contentions as described in any Other Proceedings wherein invalidity contentions have been, or will be, provided regarding the ’578 patent, its foreign counterparts, or any parent or child patent of the ’578 patent, including the N.D. Cal. Action. Defendants reserve the right to use any and all portions of the publication, related publications, commercial embodiments of the publication, and other evidence that is discovered in these lawsuits to demonstrate and/or evidence the components, functionality, and capabilities of the devices and systems disclosed in the references charted.

Where Defendants identify a particular figure in a prior art reference, the identification should be understood to encompass the caption and description of the figure, as well as any text relating to the figure in addition to the figure itself. Similarly, where an identified portion of text refers to a figure, embodiment, or other material, the identification should be understood to include the referenced figure, embodiment, or other material as well. Consistent with P.R. 3-3(c), Defendants’ citations to specific statements, figures, or disclosures in a prior art reference are sufficient to put Plaintiff on notice where each element of each Asserted Claim is found in the prior art. However, it should be recognized that a person of ordinary skill in the art would generally read a prior art reference as a whole and in the context of other publications, literature, and general knowledge in the field. To

understand and interpret any specific statement or disclosure in a prior art reference, a person of ordinary skill in the art would rely upon other information including other publications and general scientific or engineering knowledge. Defendants therefore reserve the right to rely upon other unidentified portions of the prior art references and on other publications and expert testimony to provide context and to aid understanding and interpretation of the identified portions.

Defendants also reserve the right to rely upon other portions of the prior art references, other publications, and the testimony of experts to establish that the alleged inventions would have been obvious to a person of ordinary skill in the art, including the basis of modifying or combining certain cited references. To the extent any limitation is deemed not to be exactly met by an item of prior art, then any purported differences are such that the claimed subject matter as a whole would have been obvious to one skilled in the art at the time of the alleged invention, in view of the state of the art and knowledge of those skilled in the art. To the extent that an element of an Asserted Claim is not anticipated, the claim is rendered obvious by combination with one or more other prior art references identified in Exhibits D1-D23.

5. U.S. Patent No. 9,922,348

The Asserted Claims of the ’348 patent are anticipated and/or rendered obvious by prior art. Pursuant to P.R. 3-3(a), Defendants identify the prior art references that anticipate or render obvious the ’348 patent Asserted Claims in the claim charts Exhibits E1-E23 which is hereby incorporated by reference as if fully set forth herein. The claim charts of Exhibits E1-E23 show how these prior art references teach or suggest each and every element of the ’348 patent Asserted Claims. For each reference or combination of references suggested by each chart and/or herein, Defendants indicate whether the prior art renders the claim anticipated and/or obvious pursuant to P.R. 3-3(b).

Exhibit	Prior Art References
E1	U.S. Patent No. 6,988,138 to Robert L. Alcorn et al. (“Alcorn”)

E2	International Patent Publication No. WO 02/03243 to Daniel Austin, et al. ("Austin")
E3	Blackboard System ("Blackboard")
E4	U.S. Patent No. 7,984,098 to Noel Enete, et al. ("Enete")
E5	Event411 System ("Event411")
E6	Evite.com System ("Evite")
E7	U.S. Patent Application Pub. No. 2003/0046134 to Harry A. Frolick et al. ("Frolick")
E8	U.S. Patent No. 6,519,629 to Jamey Harvey et al. ("Harvey")
E9	U.S. Patent Application Publication No. 2002/0156787 to Daniel E. Jameson et al. ("Jameson")
E10	LiveJournal system ("LiveJournal")
E11	U.S. Patent Application Publication No. 2005/0055306 to Craig Miller et al. ("Miller")
E12	U.S. Patent No. 6,813,474 to Torrance Robinson et al. ("Robinson")
E13	U.S. Patent No. 8,015,049 to Tommy H. Tam et al. ("Tam")
E14	U.S. Patent No. 7,668,913 to John Underwood et al. ("Underwood")
E15	The Yahoo! System ("Yahoo")
E16	U.S. Patent No. 7,047,030 to Forsyth ("Forsyth") and WO 02/17652 to Randall, et al. ("Randall")
E17	U.S. Patent Application Publication No. 2002/0023132 to Tornabene et al. ("Tornabene")
E18	U.S. Patent Application Publication No. 2003/0037110 to Yamamoto ("Yamamoto")
E19	U.S. Patent No. 6,716,103 to Eck et. al. ("Eck") and U.S. Patent No. 7,056,217 to Pelkey et al. ("Pelkey")
E20	Casio Cassiopeia E-125 System
E21	Compaq iPAQ System
E22	mMode System
E23	Nokia 9210 System

The prior art identified above, and in Exhibits E1-E23, individually anticipate and/or can be properly combined in multiple ways to demonstrate the obviousness of the Asserted Claims of the '348 patent. Various combinations of the references would have naturally been considered as part of the exercise of ordinary skill by one skilled in the art. The references disclosed in the attached charts and herein are also directed to the same or similar features as the purported invention claimed in the Asserted Claims of the '348 patent. To the extent Plaintiff contends that any of these features solved

a problem in the art, the references cited herein show that that problem was known to those of ordinary skill and had already been solved using obvious solutions.

To that end, the Asserted Claims of the ’348 patent simply combine elements already combined and well known in the art and yield no more than what one skilled in the art would have expected from such a combination. For example, with respect to the ’348 patent, when confronted with the alleged problems described in the ’348 patent, one of ordinary skill in the art at the time of the alleged inventions would have been motivated to consider the techniques taught by the prior art cited in these Invalidity Contentions. Consideration of the teachings of this prior art, both individually and in combination, would necessarily lead to the alleged invention claimed in the ’348 patent. This is demonstrated by the cited prior art, which disclose all of the elements of the Asserted Claims of the ’348 patent, as well as motivations to modify or combine their individual teachings. One of skill in the art would have been motivated to either modify the prior art identified in the claim charts or to combine that prior art in the manner indicated, by, for example, their background knowledge, design incentives, effects of demands known to the design community, or other market forces. Moreover, the cited prior art share commonalities. To the extent it is argued that any cited prior art does not expressly disclose a particular claim or element, it would have been inherent in the disclosure and/or obvious to a person of ordinary skill in the art to include the claimed element to perform the invention as claimed in the ’348 patent.

As described in the attached charts, all the elements of the Asserted Claims of the ’348 patent were commonplace before the alleged date of inventions. For each element, there exists evidence from the cited prior art that it was well known in the art prior to the date of invention. To the extent it is argued any of the cited prior art references, systems, and/or products do not anticipate the Asserted Claims, it would have been obvious to a person of ordinary skill in the art that the Asserted Claims are merely combinations of well-known methods and systems resulting in expected results.

Additionally, Defendants hereby incorporate by reference the motivations to combine references set forth during the prosecution of the Asserted Claims of the ’348 patent, including the statements and reasoning set forth by the examiner, as to why it would have been obvious to modify or combine references to achieve the limitations of the Asserted Claims of the ’348 patent. In addition to contending that the ’348 patent Asserted Claims are invalid in view of the prior art references cited in the claim charts of Exhibits E1-E23, Defendants further content that the ’348 patent Asserted Claims are invalid as anticipated and/or obvious under U.S.C. §§ 102 and/or 103 in view of public knowledge and uses and/or offers for sale of products and services related to the subject matter of the cited references. As discovery is ongoing, Defendants continue to investigate these items and to reserve the right to amend or supplement these contentions to include additional information or documents regarding such products and/or systems. In addition to contending that the ’348 patent Asserted Claims are invalid in view of the explicit disclosures of the prior art references cited in the claim charts of Exhibits E1-E23, Defendants further contend that the knowledge of skill evidenced by those references render those claims invalid. Defendants further contend that, even if a prior art reference does not expressly disclose all limitations as arranged or combined in the same manner as an asserted claim, a skilled artisan reading the reference would at once envisage the claimed arrangement or combination. *See, e.g., Kennametal Inc. v. Ingersoll Cutting Tool Co.*, 780 F.3d 1376, 1381 (Fed. Cir. 2015).

Defendants’ reference to a particular device or product in the claim charts of Exhibits E1-E23 should be interpreted alternatively as both as a reference to the product itself and to any corresponding patents, publications, or product literature cited in Exhibits E1-E23 that relates to the cited device or product. In addition, Defendants may rely on other documents or things that have not yet been located to support its contentions regarding such prior art device(s) or product(s) that are referenced in the charts.

Defendants incorporate by reference, as if set forth fully herein, all prior art cited during the prosecution of the ’348 patent, all prior art cited during any reexamination proceedings of the ’348 patent, all prior art as described in any pending or future *inter partes* review proceedings of the ’348 patent, and all prior art disclosed during any previous litigation proceedings or proceedings involving the ’348 patent or any related patents.

Defendants further identify and hereby incorporate by reference as if set forth fully herein the prior art references and invalidity contentions as described in any Other Proceedings wherein invalidity contentions have been, or will be, provided regarding the ’348 patent, its foreign counterparts, or any parent or child patent of the ’348 patent, including the N.D. Cal. Action. Defendants reserve the right to use any and all portions of the publication, related publications, commercial embodiments of the publication, and other evidence that is discovered in these lawsuits to demonstrate and/or evidence the components, functionality, and capabilities of the devices and systems disclosed in the references charted.

Where Defendants identify a particular figure in a prior art reference, the identification should be understood to encompass the caption and description of the figure, as well as any text relating to the figure in addition to the figure itself. Similarly, where an identified portion of text refers to a figure, embodiment, or other material, the identification should be understood to include the referenced figure, embodiment, or other material as well. Consistent with P.R. 3-3(c), Defendants’ citations to specific statements, figures, or disclosures in a prior art reference are sufficient to put Plaintiff on notice where each element of each Asserted Claim is found in the prior art. However, it should be recognized that a person of ordinary skill in the art would generally read a prior art reference as a whole and in the context of other publications, literature, and general knowledge in the field. To understand and interpret any specific statement or disclosure in a prior art reference, a person of ordinary skill in the art would rely upon other information including other publications and general

scientific or engineering knowledge. Defendants therefore reserve the right to rely upon other unidentified portions of the prior art references and on other publications and expert testimony to provide context and to aid understanding and interpretation of the identified portions.

Defendants also reserve the right to rely upon other portions of the prior art references, other publications, and the testimony of experts to establish that the alleged inventions would have been obvious to a person of ordinary skill in the art, including the basis of modifying or combining certain cited references. To the extent any limitation is deemed not to be exactly met by an item of prior art, then any purported differences are such that the claimed subject matter as a whole would have been obvious to one skilled in the art at the time of the alleged invention, in view of the state of the art and knowledge of those skilled in the art. To the extent that an element of an Asserted Claim is not anticipated, the claim is rendered obvious by combination with one or more other prior art references identified in Exhibits E1-E23.

B. Obviousness

As stated above, Defendants incorporate by reference all other invalidity contentions related to the Asserted Patents served on or otherwise provided to Plaintiff, whether past or in the future. In addition to certain claims being anticipated at least under Plaintiff's apparent claim constructions as indicated above, the Asserted Claims are also invalid as obvious over the same teachings identified for anticipation. Further, the Asserted Claims are obvious over various combinations of the references shown in the claim charts accompanying or incorporated by reference into this disclosure. No Asserted Claim goes beyond combining known elements to achieve predictable results or does more than choose between clear alternatives known to those of skill in the art. Thus, to the extent that an Asserted Claim is not anticipated, it is nevertheless invalid as obvious. Specifically, Defendants assert that any charted or incorporated reference in combination with one or more other charted or incorporated references renders the Asserted Claims obvious.

In *KSR International Co. v. Teleflex, Inc*., the United States Supreme Court held that, among other things, "[t]he combination of familiar elements according to known methods is likely to be obvious when it does no more than yield predictable results." 550 U.S. 398, 416 (2007); *see also id*. at 417 ("[A] court must ask whether the improvement is more than the predictable use of prior art elements according to their established functions."). In particular, a patent is obvious where "the content of the prior art, the scope of the patent claim, and the level of ordinary skill are not in material dispute, and the obviousness of the claim is apparent in light of these factors." *Id*. at 427. The Supreme Court found that "if a technique has been used to improve one device, and a person of ordinary skill in the art would recognize that it would improve similar devices in the same way, using the technique is obvious unless its actual application is beyond his or her skill." *Id*. at 417.

Moreover, the Supreme Court recognizes that market pressures will motivate a person of ordinary skill to survey known art for solutions to problems. *Id*. at 421 ("When there is a design need or market pressure to solve a problem and there are a finite number of identified, predictable solutions, a person of ordinary skill in the art has good reason to pursue the known options within his or her technical grasp."). When a person of ordinary skill uses an identified, predictable solution to solve a problem, "it is likely the product not of innovation but of ordinary skill and common sense." *Id*. In addition, when a work is available in one field of endeavor, design incentives, and other market forces can prompt variations of it, either in the same field or a different one. *Id*. at 417. If a person of ordinary skill can implement a predictable variation, U.S.C. § 103 bars its patentability. *Id*.

"'[A]ny need or problem known in the field of endeavor at the time of invention and addressed by the patent can provide a reason for combining the elements in the manner claimed.'" *Intel Corp. v. PACT XPP Schweiz AG*, 61 F.4th 1373, 1379 (Fed. Cir. 2023) (quoting *KSR*, 550 U.S. at 420). "Additionally, 'universal' motivations known in a particular field to improve technology provide 'a motivation to combine prior art references even absent any hint of suggestion in the references

themselves.'" *Id*. (quoting *Intel Corp. v. Qualcomm Inc*., 21 F.4th 784, 797–99 (Fed. Cir. 2021)) (original emphasis). Thus, motivations to combine, as well as the general state of the art, may be found in a variety of places including, but not limited to, in the references defined above, and the specification of the Asserted Patents. A person of ordinary skill in the art at the time of the alleged invention would have been motivated to combine any one piece of identified prior art with any other identified piece of prior art. For at least this reason, it would have been obvious to a person of skill in the art at the time of the alleged invention of the Asserted Claims to combine the various references cited herein so as to practice the Asserted Claims and there is a motivation in the art to make such a combination. Further reasons to combine the references identified in these charts include the nature of the problem being solved, the express, implied, and/or inherent teachings of the prior art, the knowledge of persons of ordinary skill in the art, the fact that the prior art is generally directed towards similar methods and systems, that such combinations would have yielded predictable results, and that such combinations would have represented known alternatives to a person of ordinary skill in the art.

The law does not require evidence of a specific motivation to combine prior art where the combination would yield expected results and at most simply represents a known alternative or design choice to one of skill in the art. *See Apple Inc. v. Samsung Elecs. Co*., 839 F.3d 1034, 1058 (Fed. Cir. 2016); *Intercontinental Great Brands LLC v. Kellogg N. Am. Co*., 869 F.3d 1336, 1344 (Fed. Cir. 2017); *KSR*, 550 U.S. at 415 (rejecting the Federal Circuit's "rigid" application of the teaching, suggestion, or motivation to combine test, and instead applying an "expansive and flexible" approach). Indeed, the Supreme Court held that a POSITA is "a person of ordinary creativity, not an automaton" and "in many cases a person of ordinary skill in the art will be able to fit the teachings of multiple patents together like pieces of a puzzle." *KSR*, 550 U.S. at 420–21.

Nevertheless, in addition to the information contained immediately above and elsewhere in these contentions, Defendants identify additional motivations and reasons to combine. For example,

in addition to the specific motivations identified herein, motivation to modify a particular reference or to combine any two or more of the identified references comes from (a) the nature of the problem being solved, (b) the teachings of the prior art, (c) the knowledge of persons of ordinary skill in the art, (d) the fact that all the references teach systems, apparatuses, and methods related to the subject matter and address the same technical issues described in the Asserted Patents, and (e) one would be motivated by considerations of efficiency, effectiveness, convenience, cost-savings, and accessibility, to combine the various teachings of the references. Additionally, one would be motivated to address the alleged problems or achieve the purported objectives identified in the Background sections of the Asserted Patents, of the references cited on the face of the Asserted Patents, and of the other references cited herein.

In sum, motivations to modify or combine the identified references including the references listed above can be found via, for example, discussions in the cited references, the state of the art discussed in the references, and the knowledge of one of ordinary skill in the art. One of ordinary skill in the art would have been motivated to combine these references, because these references relate to common objectives and subject matter. The references share commonalities in terms of their general subject matter as well as the types of equipment, products, systems, and/or methods used. Further, certain prior art references explicitly or implicitly reference other prior art references, share common authors or inventors, were published in the same journals, were compiled by a common author of a compilation or reference book, were presented at the same conferences, and/or were developed at common companies, schools, or organizations, which would motivate one of ordinary skill in the art to combine them. These references are within the field of the Asserted Patents and are directed to similar subject matter within the field. Additionally, the references, and any products, devices, or processes described in the references, existed and/or were invented in the same time period providing further motivation for combination. These disclosures were provided without prejudice to

any arguments or objections concerning the relevance of motivation to combine in connection with any invalidity contentions.

Defendants reserve the right to further specify the motivations to combine the prior art in response to positions that Plaintiff may take later in this case and as discovery, including third party discovery, proceeds. Defendants may rely on any and all portions of the prior art, other documents, and expert testimony to establish that a person of ordinary skill in the art would have been motivated to modify or combine the prior art so as to render the claims invalid as obvious.

Moreover, Defendants reserve the right to rely on later identified sources of information, including, but not limited to, witness testimony and other discovery, to establish the state of the art in the relevant time frame pertaining to the Asserted Patents.

Additionally, Defendants note that Plaintiff has neither provided any contention that secondary considerations of non-obviousness exist for any Asserted Patent nor provided any evidence of such secondary considerations. Defendants are not aware of any evidence supporting the existence of any such secondary considerations. This lack of evidence further renders the Asserted Claims obvious. Proving any such secondary considerations is Plaintiff's burden. *See, e.g., ZUP, LLC v. Nach Mfg., Inc.*, 896 F.3d 1365, 1373 (Fed. Cir. 2018) ("[A] patentee bears the burden of production with respect to evidence of secondary considerations of nonobviousness."). To the extent Plaintiff is permitted to introduce contentions and/or evidence concerning secondary considerations in the future, Defendants reserve all rights to rebut those contentions if and when Plaintiff identifies them. At present, Defendants note the complete lack of any such evidence in the record. Moreover, Defendants further contend that, in any event, the evidence of obviousness for each asserted claim is so overwhelming that secondary considerations are necessarily insufficient to rebut Defendants' showing. *See, e.g., Ohio Willow Wood Co. v. Alps S., LLC*, 735 F.3d 1333, 1344 (Fed. Cir. 2013) ("[W]here a claimed invention represents no more than the predictable use of prior art elements according to established

functions, as here, evidence of secondary indicia are frequently deemed inadequate to establish non-obviousness.”).

While Defendants reserve the right to rely on any combination of the references reflected in their charts or incorporated herein by reference, Defendants provide the following exemplary and non-exhaustive references and/or combinations evidencing invalidity of the claims of the Asserted Patents. The combinations of prior art listed below render obvious the Asserted Claims under the proper construction of the claims and/or under Plaintiff’s apparent interpretation of the claims as set forth by Plaintiff in its Complaints and Infringement Contentions.

1. The Asserted Patents

Pursuant to P.R. 3-3(a) and (b), Defendants identify in Exhibits A1-A23, B1-B23, C1-C23, D1-D23, E1-E23 the prior art references that render obvious the Asserted Claims of the Asserted Patents in view of the prior art. To the extent Plaintiff contends that an element is not disclosed in any one of the anticipatory references described in Exhibits A1-A23, B1-B23, C1-C23, D1-D23, E1-E23, the limitation would have been obvious in light of the disclosures within the reference and the knowledge of one of ordinary skill in the art at the time of the Asserted Patents. Moreover, to the extent Plaintiff contends that an element is not disclosed in any one of the anticipatory references described in Exhibits A1-A23, B1-B23, C1-C23, D1-D23, E1-E23, such reference may be combined with any other references listed in Exhibits A1-A23, B1-B23, C1-C23, D1-D23, E1-E23 for such element, thereby rendering the claims invalid for obviousness. To the extent a finder of fact determines that a limitation of any of the Asserted Claims of the Asserted Patents is not disclosed by one of the references identified above pursuant to P.R. 3-3(a), the claim is nevertheless unpatentable as obvious because they contain nothing that constitutes a patentable innovation. To the extent a finder of fact determines that a limitation of the Asserted Claims of the Asserted Patents is not anticipated, it does not go beyond combining familiar elements according to known methods to

achieve predictable results or does more than choose between clear alternatives known to those of ordinary skill in the art.

The prior art references identified herein explicitly or implicitly refer to other prior art references, share common authors or inventors, were published in the same journals, presented at the same conferences, were presented as proposals to standards working groups, and/or were developed at common companies, schools, or organizations, all of which would motivate one of skill in the art to combine them. These references are also within the field of the Asserted Patents and are directed to similar subject matter within that field. Additionally, any products, devices, and/or processes described in the references existed and/or were invented before or during the period in which the claimed inventions were developed, providing further motivation to combine them.

a) Obviousness Rationale and Motivations to Combine

Obviousness: For at least the reasons described in these contentions, it would have been obvious to one of ordinary skill in the art to combine any of a number of prior art references, including any combination of those prior art references identified in A1-A23, B1-B23, C1-C23, D1-D23, E1-E23 along with the knowledge of one of ordinary skill in the art to meet the limitations of the Asserted Claims of the Asserted Patents. As a result, the references identified herein render one or more Asserted Claims of the Asserted Patents obvious when the references are read in combination with each other, and/or when read in view of the state of the art and knowledge of those skilled in the art. Each and every reference identified is also relevant to the state of the art at the time of the alleged invention. Any of the references disclosed above may be combined with one another to render obvious (and therefore invalid) each of the Asserted Claims. Defendants may rely upon a subset of the identified references or all of the references identified herein, including all references in Exhibits A1-A23, B1-B23, C1-C23, D1-D23, E1-E23, for purposes of obviousness depending on the Court's

claim construction, positions taken by Plaintiff during this litigation, and further investigation and discovery.

Reservation of Rights: Moreover, as mentioned above, Defendants have not yet completed their search or discovery concerning additional prior art. As such, Defendants' inclusion of exemplary combinations does not preclude them from identifying other invalidating combinations as appropriate, and Defendants reserve the right to identify additional specific combinations as well as to detail and explain such combinations.

No More Than Ordinary Variations of Prior Art; No Unexpected Results: To the extent not anticipated, the Asserted Claims of the Asserted Patents represent no more than the result of ordinary variations of the prior art. Defendants further believe that no showing of a specific motivation to combine prior art is required to combine the references disclosed above and in the appended charts, as each combination of art would have no unexpected results, and at most would simply represent a known alternative to one of ordinary skill in the art. *See KSR*, 550 U.S. at 415–16 (rejecting the Federal Circuit's "rigid" application of the teaching, suggestion, or motivation to combine test, instead espousing an "expansive and flexible" approach); *Apple Inc. v. Samsung Elecs. Co*., 839 F.3d 1034, 1058 (Fed. Cir. 2016); *Intercontinental Great Brands LLC v. Kellogg N. Am. Co.*, 869 F.3d 1336, 1344 (Fed. Cir. 2017). Indeed, the Supreme Court held that a person of ordinary skill in the art is "a person of ordinary creativity, not an automaton" and "in many cases a person of ordinary skill in the art will be able to fit the teachings of multiple patents together like pieces of a puzzle." *KSR*, 550 U.S. at 420–21. Nevertheless, in addition to the information contained elsewhere in these contentions, Defendants identify motivations and reasons to combine the cited art.

Predictable Results; Obvious to Try: One or more combinations of the prior art references identified in Section IV.B.C *infra* would have been obvious because these references would have been combined using: known methods to yield predictable results; known techniques in the same way; a

simple substitution of one known, equivalent element for another to obtain predictable results; and/or a teaching, suggestion, or motivation in the prior art generally. In addition, it would have been obvious to try combining the prior art references identified above because there were only a finite number of predictable solutions and/or because known work in one field of endeavor prompted variations based on predictable design incentives and/or market forces either in the same field or a different one.

Further, the combinations of the prior art references identified herein would have been obvious because the combinations represent known potential options with a reasonable expectation of success.

Interrelated Teachings: Additional evidence that there would have been a motivation to combine the prior art references identified above includes the interrelated teachings of multiple prior art references; common authorship; the effects of demands known to the design community or present in the marketplace; the existence of a known problem for which there was an obvious solution encompassed by the Asserted Claims of the Asserted Patents; the existence of a known need or problem in the field of endeavor at the time of the alleged invention(s); and the background knowledge that would have been possessed by a person having ordinary skill in the art.

Same Area of Technology: Additionally, it would have been obvious to one of ordinary skill in the art to consult and/or combine any of the prior art listed in A1-A23, B1-B23, C1-C23, D1-D23, E1-E23 and Section IV.B.1(b) because all these prior art references relate to the same area of technology and/or are from analogous art. The Asserted Patents are generally directed to "network-based communication systems, and more particularly to techniques for information content management in such systems." *E.g.,* '336 patent at 1:21-25. The Asserted Claims merely unite old elements, well known in the field, with no change in their respective function or result. Given the interrelated teachings of the prior art, the effects of demands known to the design community or present in the marketplace, and the background knowledge possessed by a person having ordinary

skill in the art, it would have been obvious for one of ordinary skill in the art to combine these familiar elements, disclosed and/or embodied in the prior art listed above to practice the Asserted Claims.

Same Technical Issues: A person of ordinary skill would have been motivated to combine the above prior art based on his or her knowledge, the nature of the problem to be solved, and the teachings of the prior art. As described above, the identified prior art addresses the same or similar technical issues and suggests the same or similar solutions to those issues. Moreover, some of the prior art refers to or discusses other prior art, illustrating the close technical relationship among the prior art. For the Asserted Patents, one of ordinary skill in the art would have been motivated to combine known prior art solutions described in these references relating to content management for mobile communications systems and methods.

There are significant similarities in subject matter and objectives for each of many references used in these contentions for the Asserted Patents, as shown in A1-A23, B1-B23, C1-C23, D1-D23, E1-E23 and Section IV.B.1(b). Moreover, to the extent that any of these references includes a feature not expressly disclosed in one or more other references, a POSITA would have naturally looked to, and been motivated to combine, any one of these references with one or more of the other references in order to better achieve their common goals of improving network communications. Further, a POSITA also would have naturally looked to and been motivated to combine any one of these references with one or more of the other references in order to better achieve their common goals of user friendliness.

In addition to the specific examples provided above, Defendants reserve the right to rely on the disclosures of the references identified in A1-A23, B1-B23, C1-C23, D1-D23, E1-E23 and Sections III or IV.B.1(b) for additional motivations to combine. These examples of combinations are given merely to illustrate various motivations to combine and are not intended to provide an exhaustive list of every possible combination to which the motivation may apply. Defendants reserve

the right to contend that the motivations to combine provided herein apply to other combinations at the appropriate time, e.g., in expert reports regarding invalidity. To the extent one or more of identified combinations is posed as a combination of only two references, it does not indicate that the two references that are being combined for one purpose could not be joined by a third reference (or more additional references) whose combination serves the same or a different purpose. Indeed, many of the features recited in the Asserted Claims are componentized features/functions whereby the feature could be implemented using teachings from another source while not interfering with additional features. For that reason, a POSITA may have reasonably looked to and been motivated to combine three or more references in order to achieve a specific outcome.

Summary of Motivations to Combine: Thus, the motivation to combine the teachings of the prior art references identified in Exhibits A1-A23, B1-B23, C1-C23, D1-D23, E1-E23 is found in the references themselves and also in: (1) the nature of the problem being solved; (2) the express, implied and inherent teachings of the prior art; (3) the knowledge of persons of ordinary skill in the art; (4) the predictable results obtained in combining the different elements of the prior art; (5) the predictable results obtained in simple substitution of one known element for another; (6) the use of a known technique to improve similar devices, methods, or products in the same way; (7) the predictable results obtained in applying a known technique to a known device, method, or product ready for improvement; (8) the finite number of identified predictable solutions that had a reasonable expectation of success; and (9) known work in various technological fields that could be applied to the same or different technological fields based on design incentives or other market forces.

b) Obviousness Combinations

In addition to combinations of references and motivations to combine identified elsewhere herein, including within claim charts, Defendants identify references in groups below, based on common subject matter relevant to the Asserted Claims, for the purpose of disclosing obviousness

combinations and further disclosing motivations to combine. The absence of a particular reference from a group is not an admission or suggestion that the reference does not disclose any particular claim limitations.

(1) Standard Web and Computing Functionality

The Asserted Claims variously disclose elements that comprise generic web, networking, and computing functionality that is not specific to wireless networks or mobile devices. These include:

- a "network-based communication system" ('336, claims 1, 11, 15; '801, claim 25; '578, claim 11; '348, claim 12)
- "web-based" functionality ('336, claim 1; '348, all claims)
- uniform resource locators (URLs) ('336, claim 6)
- "non-transitory computer-readable storage medium having embodied therein executable code of one or more software programs for use in managing information content in a network-based communication system, wherein said executable program code when executed by a processing element of the communication system implements" a method ('336, claim 10; '801, claim 22; '039, claims 17, 22; 578, claim 8; '348, claims 17, 18)
- a "processing element comprising a processor coupled to a memory" ('336, claim 11; '801, claim 23; '039, claims 18, 23; '578, claim 9; '348, claim 1)
- one or more "server[s]" ('336, claim 13; '039, claims 1, 18, 19, 23, 25, 30) that are "accessible over the Internet via a network interface" ('336, claim 14; '801, claim 24; '578, claim 10), and that are "configured to communicate over a network" ('336, claim 15; '801, claim 25; '578, claim 11; '348, claim 12)
- a "network interface" that is "coupled to" a "processing element and configured to communicate with a plurality of . . . devices over at least one network" ('348, claim 1; '039, claims 18, 23)

- a "web server" that includes a "network interface" and a "processing element" and that is "accessible to . . . devices over the Internet via [a] network interface" ('348, claim 7)

Nothing about these claim limitations add anything novel or non-obvious over the prior art. To the contrary, each of these elements are generic parts of a networking system, which were well-known, routine, conventional, and widely available long before the alleged invention(s) of the Asserted Patents.

The use of these standard computer and networking elements in building a network-based communication system would have been obvious to a person of ordinary skill in the art at least because doing so would have involved the combination of prior art elements according to known methods to yield predictable results, the simple substitution of one known element for another to obtain predictable results, the application of a known technique to a known device ready for improvement to yield predictable results, and/or would have been obvious to try. Moreover, a person of ordinary skill in the art would have readily appreciated the well-known and widespread use of such standard computer and networking elements and the associated benefits and advantages of their use. Persons of ordinary skill in the art would have been motivated to combine the teachings of these references with any other network-based communication system in order to enable the basic functionality of such a system.

As the attached claim charts demonstrate, generic web-based computer networking systems were disclosed in the prior art. Specific disclosures, which are purely exemplary, from charted references Alcorn, Austin, Blackboard, Enete, Event411, Frolick, Harvey, Jameson, LiveJournal, Miller, Robinson, Tam, Underwood, Yahoo, Forsyth, Randall, Tornabene, Eck, Pelkey, Casio Cassiopeia E-125 System, Compaq iPAQ System, mMode System, Nokia 9210 System and additional prior art below (collectively the ***Standard Web and Computing Functionality*** references) are set forth

in the attached charts, which include motivations to combine and disclosures of these generic computer networking system components.

First, mobile devices with at least one processing element comprising a processor coupled to a memory and at least one network interface were well-known prior to the earliest priority date of the Asserted Patents.

For example, U.S. Patent 6,947,396 to Salmi ("Salmi"), filed December 1, 2000 and assigned to Nokia Mobile Phones Ltd. ("Nokia"), describes "parts that are essential for the operation of a [WAP-enabled] wireless terminal." Salmi, 14:53-55. The wireless terminal includes an MPU, preferably a microprocessor, controller or digital signal processor (DSP) coupled to a memory (ROM and RAM), and a radio part that "transmit[s] radio frequency messages, such as messages according to WAP protocol." Salmi, 14:55-65.

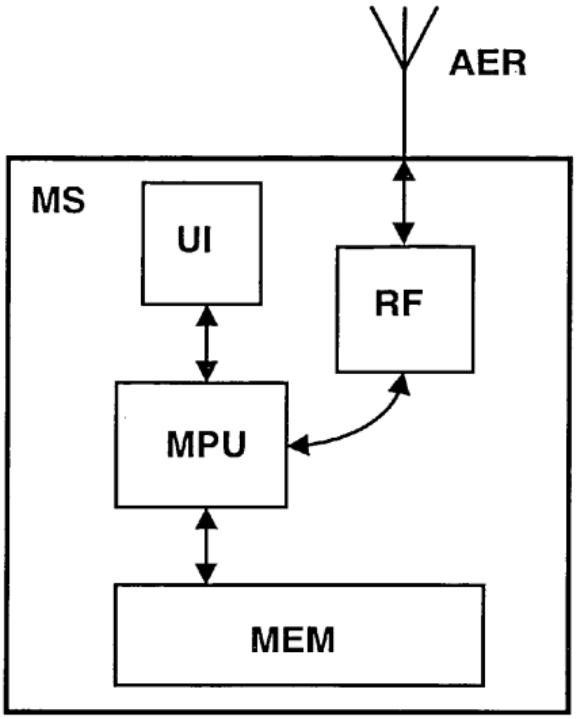

Salmi, Figure 6

As another example, U.S. Patent 7,031,718 to Jouppi, et al. ("Jouppi"), filed March 13, 2002 and also assigned to Nokia, describes a mobile terminal, "such as [the] Nokia 9210 Communicator." Jouppi, 7:52-57. The wireless terminal includes "one or more processors CPU, DSP, memory means MEM" and "a radio part RF for communication with the base station 2." Jouppi, 7:57-61.

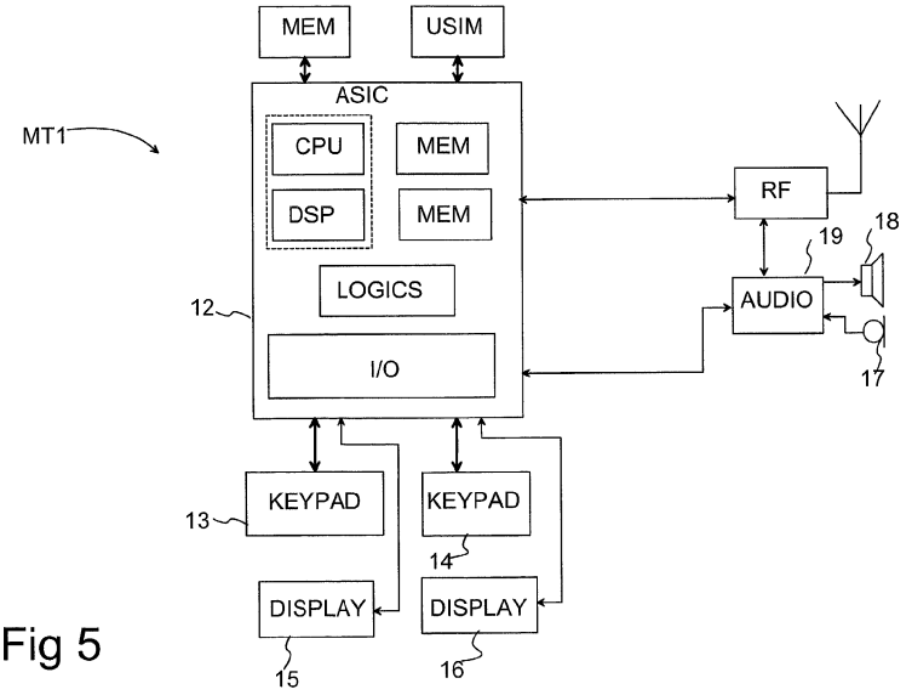

Jouppi, Figure 5

As another example, U.S. Patent 7,092,495 to Kraft, et al. ("Kraft"), filed on December 13, 2001 and assigned to Nokia Corporation, describes the "most important parts" of a GSM mobile phone. *See* Kraft, 4:4-6. The GSM mobile device includes a processor coupled to RAM and ROM memory and transmitter/receiver circuit 19. Kraft, 4:6-20.

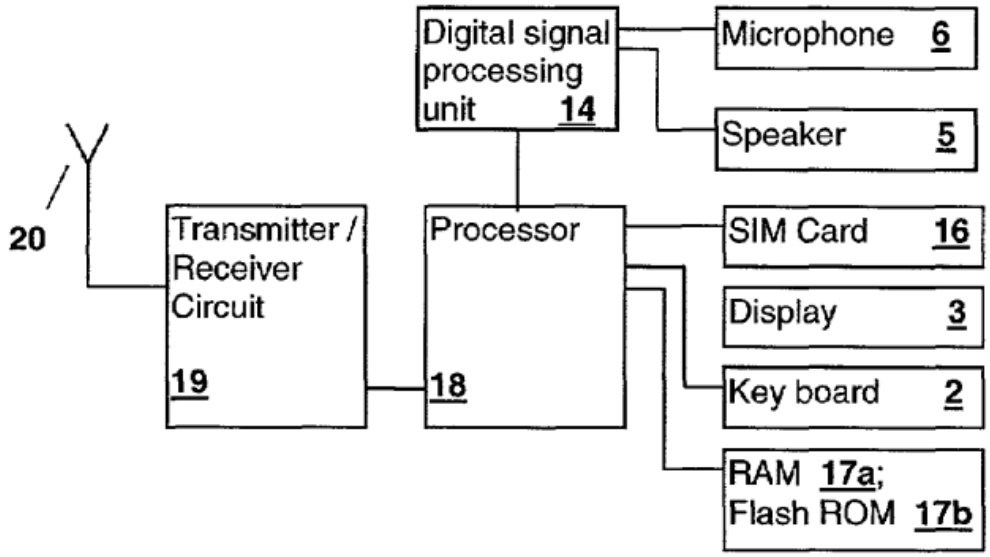

Kraft, Figure 2

As another example, U.S. Patent 6,788,949 to Bansal ("Bansal"), filed on September 21, 2000, describes a mobile information device supporting "mobile chat sessions." Bansal, 1:13-15. Bansal explains that "a typical information device", illustrated in Figure 5 (below), includes "**well-known** components such as one or more network interfaces 5100, one or more processors 5200, one or more memories 5300 containing instructions 5400, and/or one or more input/output ("I/O") devices 5350." Bansal, 6:66-7:5.

Second, servers including at least one processing element comprising a processor coupled to a memory and at least one network interface were well-known prior to the earliest priority date of the Asserted Patents.

For example, U.S. Patent 7,802,207 to Agboatwalla et al. ("Agboatwalla") discloses a "typical hardware configuration" of a workstation. Agboatwalla, 5:40-42. The configuration includes CPU 110, RAM 114, ROM 116 and "communication adapter 134 for connecting the workstation to a communication network." Agboatwalla, 5:45-55.

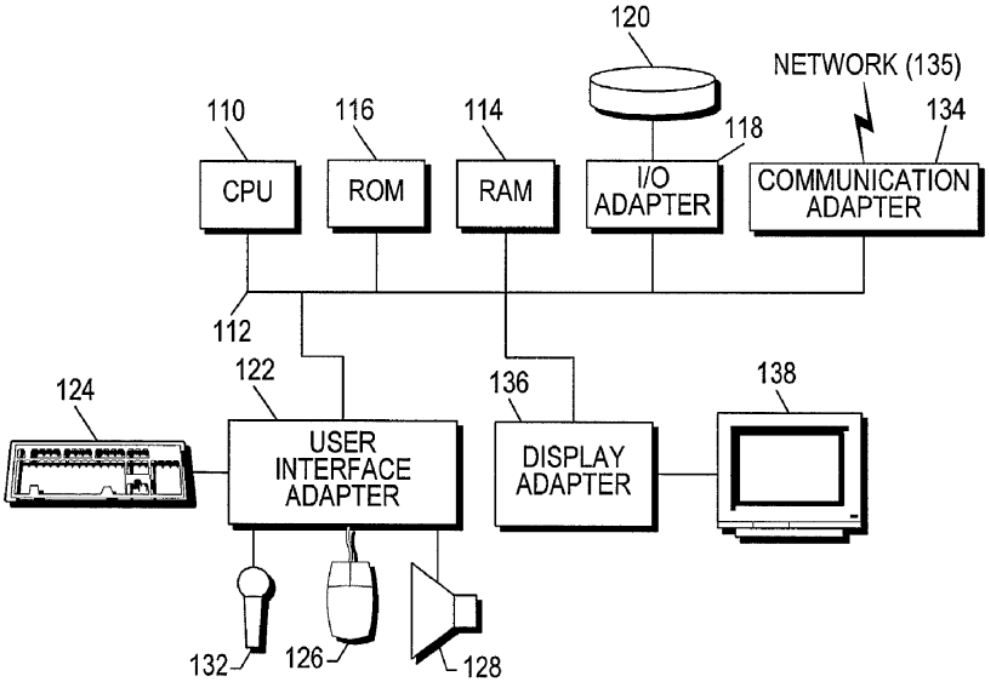

Agboatwalla, Figure 1

As another example, U.S. Patent 7,574,486 to Cheng et al. ("Cheng") discloses "a block diagram of the internal hardware of [a] computer system", illustrated in Figure 12 (below). Cheng, 23:26-27. The computer system includes a CPU 1204, ROM 1206, RAM 1208, and a communications port 1216 for communications with a transport medium such as wireless communication network. Cheng, 23:29-51.

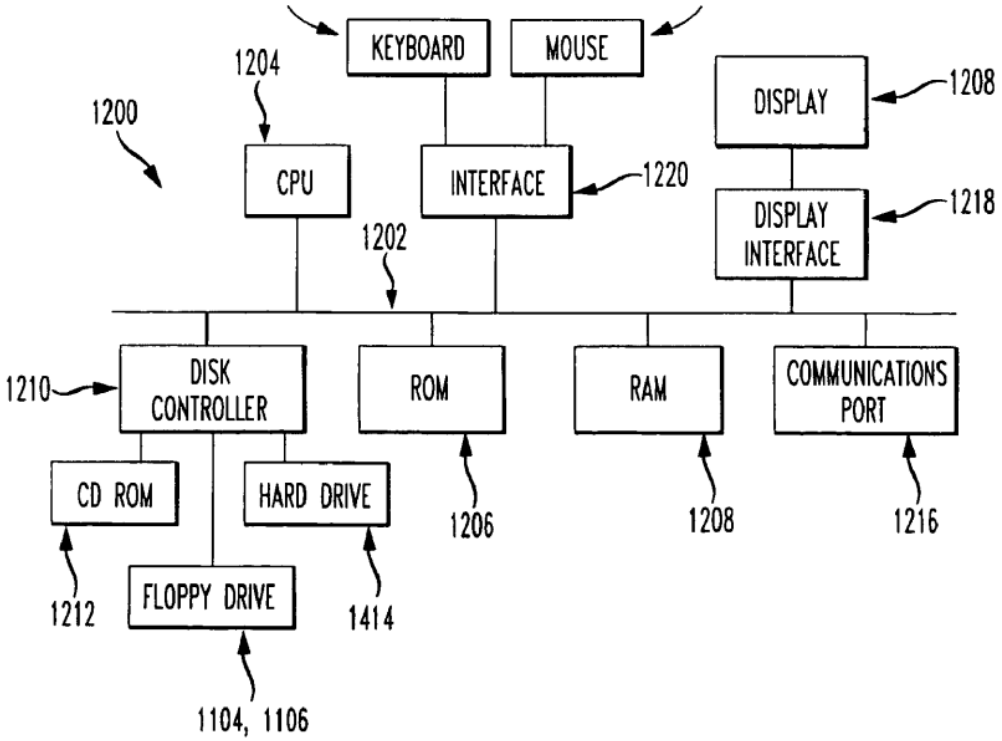

Cheng, Figure 12

In addition, non-transitory computer-readable storage mediums were well-known. Indeed, a memory or another similar computer readable medium storing the software to be executed on the processor would necessarily be included in both the mobile device and server. For example, Silberschatz explains that a "computer system consists of a CPU and a number of device controllers that are connected through a common bus that provides access to shared memory." Silberschatz, 29-30. Silberschatz stresses that for a computer "to do its job of executing programs," the programs must be stored in memory. Silberschatz, 37.

A POSITA would have had a reasonable expectation of success in making any of the above such modifications. A POSITA would have understood that these references, as well as the POSITA's knowledge, disclose interrelated teachings based on routine technologies and would have been amenable to various well-understood and predictable combinations.

(2) Standard Mobile/Wireless Functionality

The Asserted Claims disclose elements that comprise standard functionality related to wireless networks and mobile devices. These include:

- "mobile information channel" ('336, claims 1, 11, 15, 20, 22, 26; '801, claims 1, 11, 15, 17, 20, 23, 25), "application-based information channel" ('039, claims 1-4, 18, 19, 23, 24, 28-30; '578, claims 1, 9, 12, 21) and "web-based shared information channel" ('348, claims 1, 8, 13, 14, 17, 18)
- "wireless network" ('336, claims 1, 11, 15; '801, claims 1, 7, 8, 10, 23, 25; '578, claims 1, 9, 12, 21; '039, claims 1, 8, 9, 18, 19, 23; '348, claim 9)
- "mobile device[s]" ('801, claims 1, 20, 23, 25; '039, claims 1, 8, 13-15, 17-19, 20, 23, 24, 28, 29; '578, claims 1, 9, 12, 21; '348, claims 1, 6-9, 13, 14, 17, 18), including that a mobile device is one of "a mobile telephone, a tablet computer, a GPS-based navigational device, a watch and a portable game player" ('039, claim 15; '348, claim 6)
- "mobile device application" ('801, claim 20)

Nothing about these claim limitations add anything novel or non-obvious over the prior art. To the contrary, each of these elements are generic parts of a system involving mobile devices, wireless networks, and mobile websites, which were well-known, routine, conventional, and widely available long before the alleged invention(s) of the Asserted Patents.

The use of these standard mobile device, wireless network, and mobile web-related elements in building a mobile-enabled communication system would have been obvious to a person of ordinary skill in the art at least because doing so would have involved the combination of prior art elements according to known methods to yield predictable results, the simple substitution of one known element for another to obtain predictable results, the application of a known technique to a known device ready

for improvement to yield predictable results, and/or would have been obvious to try. Moreover, a person of ordinary skill in the art would have readily appreciated the well-known and widespread use of mobile device, wireless network, and mobile web-related elements and the associated benefits and advantages of their use. Persons of ordinary skill in the art would have been motivated to combine the teachings of these references with any other network- and/or web-based communication system in order to provide mobile and wireless availability to such a system.

As the attached claim charts demonstrate, generic web-based computer networking systems were disclosed in the prior art. Specific disclosures, which are purely exemplary, from charted references Alcorn, Austin, Blackboard, Enete, Event411, Frolick, Harvey, Jameson, LiveJournal, Miller, Robinson, Tam, Underwood, Yahoo, Forsyth, Randall, Tornabene, Eck, Pelkey, Casio Cassiopeia E-125 System, Compaq iPAQ System, mMode System, Nokia 9210 System, and additional prior art discussed below (collectively the ***Standard Mobile/Wireless Functionality*** references) are set forth in the attached charts for charted references, which include motivations to combine and disclosures of these generic mobile and wireless networking components, and below for additional prior art:

The Asserted Patents' "Background of the Invention" section discloses:

> One of the most rapidly expanding aspects of wireless networking involves the accessing of information content over wireless networks via web-enabled mobile devices. Examples of such devices include mobile telephones, personal digital assistants (PDAs), palmtop computers, etc. As is well-known, these and other web-enabled devices not only provide access to the Internet, but can also be used to support other types of wireless networking functionality, such as messaging, distributed collaboration, and location-based services.

See, e.g., '336 patent, 1:30-40. The Asserted Patents further disclose a plethora of existing, exemplary mobile devices, including "mobile phone 40, smart phone 41, pocket PC 42, Palm device 43, iMode

phone 44, personal computer 45, set-top box 46, game and/or camera 47 and other wireless devices 48." '336 patent, 9:10-14.

For example, mMode System included devices, such as Sony Ericsson's T68i, launched in the United States on or about April 2002, that contained a GPRS modem allowing users to access the internet. T68i White Paper at 6 ("With a GPRS (General Packet Radio Services) modem built in, the T68i offers a fast and satisfying mobile Internet experience."). Users could also access the internet by connecting to another device via a Bluetooth connection. T68i White Paper at 16 ("Data connection with a Bluetooth PC/laptop turns the phone into a modem for connecting to the Internet and for data transfer (faster than infrared or cable)."). Once connected to the internet, users could access web pages with a WAP browser. T68i White Paper at 6 ("In addition to XHTML, the WAP browser supports WML. The user can navigate between WML and XHTML pages.").

Nokia 9210 System included devices such as the 9210 Communicator, launched in the United States on or about June 2001, that also had wireless networking functionality. For example the Nokia 9210 System was able to access the internet though GSM. Nokia 9210 User Guide at 8 ("The Nokia 9210i Communicator employs the data transmission capabilities of the GSM network to send faxes, short messages, and e-mail, and to establish connections with remote computers."). Once connected to the internet, the Nokia 9210 System could access both WWW and WAP browsers. Nokia 9210 User Guide at 131 ("When you take your communicator into use, it has the following browser applications: WWW - A World Wide Web (WWW) browser supporting frames, JavaScript, and SSL (v.3) protocol; WAP - A browser for accessing various types of information, entertainment, and other services in Wireless Application Protocol (WAP) format.").

Casio Cassiopeia E-125 System included PDAs such as the Cassiopeia E-125, launched in the United States on or about May 2000, that could also be wirelessly connected to the internet. For

example, the Casio Cassiopeia E-125 System could establish an internet connection via GSM with a connection to a digital telephone (Hardware Manual at 26):

Digital Phone Connection Cable

- U.S. and Canada: Use a cdma digital phone connection cable (JK-541CA).
- For a GSM type digital phone, use a commercially available cable that is compatible with the CASSIOPEIA connector.
- After you connect the CASSIOPEIA to your digital telephone, you can dial up our Internet service provider or company server.

The following shows how to connect the CASSIOPEIA to a digital telephone.

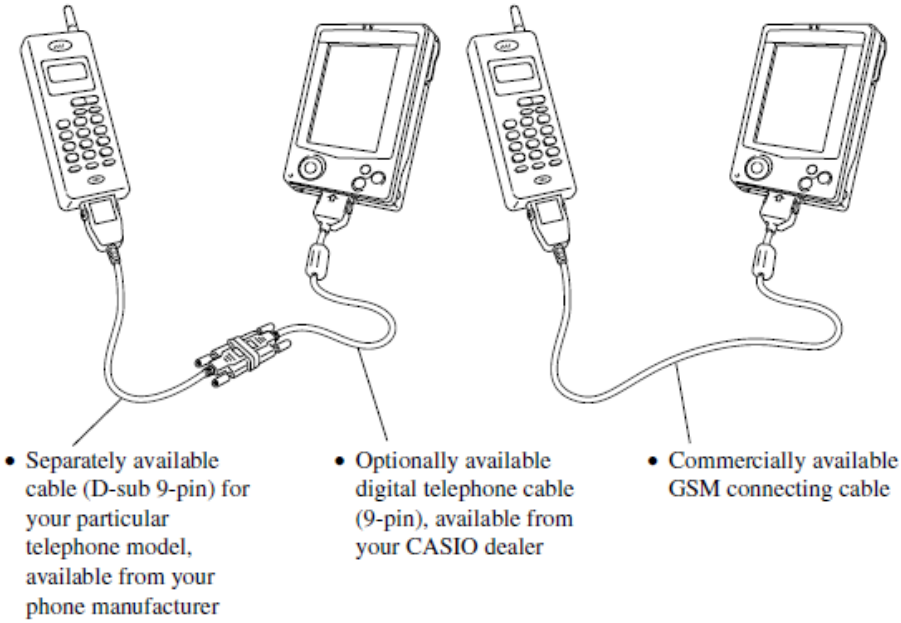

Casio Cassiopeia E-125 System could also access the internet with a modem adapter and modem card. Hardware Manual at 27 ("The Modem Adapter (JK-720MA) and CompactFlash type Modem Card (JK-711MC56) make it possible to use your CASSIOPEIA to access the Internet over an analog dial-up connection."). After establishing an internet connection, the Casio Cassiopeia E-125 System could browse the web using Pocket Internet Explorer. Pocket PC User Guide at 48 ("Use Pocket Internet Explorer to view Web pages in either of the following two ways… Connect to an Internet service provider (ISP) or network and browse the Web.").

Compaq iPAQ System also allowed users to establish a wireless internet connection. For example, Compaq iPAQ System included PDAs such as the Compaq iPAQ H3800 Series, launched in the United States on or about November 2001, that could establish an internet connection with a modem card or an Ethernet/LAN card. Reference Guide at 33 ("To send and receive e-mail with Inbox and view Web sites with Pocket Internet Explorer, set up a remote connection using a modem card or an Ethernet/LAN card."). Compaq iPAQ System could also access the internet wirelessly with an 802.11 card. Reference Guide at 89 ("Use the optional 802.11 card to connect wirelessly to the Internet or to a network with your Compaq iPAQ Pocket PC."). Once connected to the internet the Compaq iPAQ System could access web pages using Pocket Internet Explorer. Reference Guide at 37 ("With Pocket Internet Explorer and a connection to the Internet, view Web sites on your Compaq iPAQ Pocket PC."). Compaq also offered mobile internet solutions for its customers through a program called *iPAQ*net Mobility Solutions (QuickSpecs at 4):

***iPAQ*net Mobility Solutions** (U.S. only)	One year *iPAQ*net airtime (CDPD use for *iPAQ*net Mobile Internet only) and Sierra Wireless AirCard 300 for Windows CE, and PC Card Expansion Pack	238712-001
	One year *iPAQ*net airtime (CDPD use for *iPAQ*net Mobile Internet only) and Sierra Wireless AirCard 300 for Windows CE	238711-001
	Sierra Wireless AirCard 300 for Windows CE	238113-001
	One year *iPAQ*net airtime – (CDPD use for *iPAQ*net Mobile Internet only)	237424-001
	One year *iPAQ*net airtime – unlimited CDPD use on *iPAQ* Pocket PC	224257-001

Images of a flyer for *iPAQ*net Mobility Solutions is also provided below and demonstrates the wireless networking functionality of iPAQ devices (SAM-MDT-0095355-356):

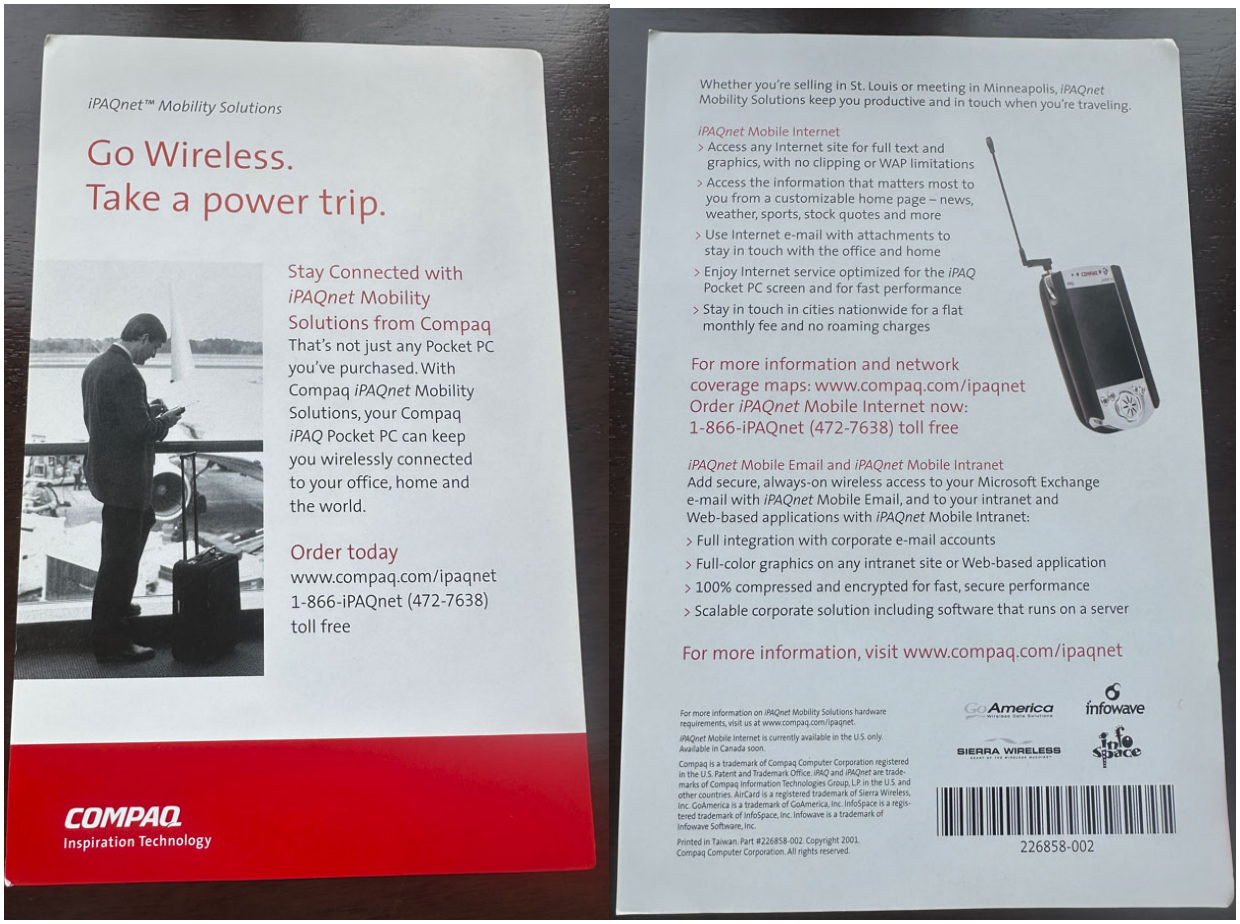

iPAQnet™ Mobility Solutions

Go Wireless.
Take a power trip.

Stay Connected with *iPAQnet* Mobility Solutions from Compaq

That's not just any Pocket PC you've purchased. With Compaq *iPAQnet* Mobility Solutions, your Compaq *iPAQ* Pocket PC can keep you wirelessly connected to your office, home and the world.

Order today
www.compaq.com/ipaqnet
1-866-iPAQnet (472-7638) toll free

COMPAQ
Inspiration Technology

Whether you're selling in St. Louis or meeting in Minneapolis, *iPAQnet* Mobility Solutions keep you productive and in touch when you're traveling.

iPAQnet Mobile Internet
- Access any Internet site for full text and graphics, with no clipping or WAP limitations
- Access the information that matters most to you from a customizable home page – news, weather, sports, stock quotes and more
- Use Internet e-mail with attachments to stay in touch with the office and home
- Enjoy Internet service optimized for the *iPAQ* Pocket PC screen and for fast performance
- Stay in touch in cities nationwide for a flat monthly fee and no roaming charges

For more information and network coverage maps: www.compaq.com/ipaqnet
Order *iPAQnet* Mobile Internet now:
1-866-iPAQnet (472-7638) toll free

iPAQnet Mobile Email and *iPAQnet* Mobile Intranet
Add secure, always-on wireless access to your Microsoft Exchange e-mail with *iPAQnet* Mobile Email, and to your intranet and Web-based applications with *iPAQnet* Mobile Intranet:
- Full integration with corporate e-mail accounts
- Full-color graphics on any intranet site or Web-based application
- 100% compressed and encrypted for fast, secure performance
- Scalable corporate solution including software that runs on a server

For more information, visit www.compaq.com/ipaqnet

For more information on *iPAQnet* Mobility Solutions hardware requirements, visit us at www.compaq.com/ipaqnet.

iPAQnet Mobile Internet is currently available in the U.S. only. Available in Canada soon.

Compaq is a trademark of Compaq Computer Corporation registered in the U.S. Patent and Trademark Office. *iPAQ* and *iPAQnet* are trademarks of Compaq Information Technologies Group, L.P. in the U.S. and other countries. AirCard is a registered trademark of Sierra Wireless, Inc. GoAmerica is a trademark of GoAmerica, Inc. InfoSpace is a registered trademark of InfoSpace, Inc. Infowave is a trademark of Infowave Software, Inc.

Printed in Taiwan. Part #226858-002. Copyright 2001. Compaq Computer Corporation. All rights reserved.

GoAmerica
infowave
SIERRA WIRELESS
infospace

226858-002

Casio Cassiopeia E-125 System and Compaq iPAQ System were also able to wirelessly connect to the internet and view the same web pages as could be seen on a desktop computer by using a Terminal Server Client application. Developing For The Pocket PC at 2 ("Pocket PC 2002 includes the Terminal Server Client application, which allows a Pocket PC to access a terminal server. This means that you can run desktop Windows applications on the terminal server and interact with them from your Pocket PC. When you have a terminal server you can run any desktop Windows application just as if you were sitting at a PC.").

Similarly, the Palm VII organizer and related Palm branded devices and software is described in "Palm OS Web Application Developer's Guide: Developing and Delivering PQAs with Web Clipping," by Ben Combee et al., with a copyright date of 2001 ("Combee"). Combee discloses as follows:

> In October 1999, Palm, Inc. entered the wireless Internet market with the introduction of the Palm VII organizer. Although the Palm VII wasn't the first portable device to feature built-in wireless networking, it was the first based on the successful Palm OS operating system, and it had an irresistible combination of size, battery life, throughput, and coverage area.
>
> In designing the Palm VII, Palm, Inc. had several advantages over its competitors. First, it was based on an established operating system with a variety of applications already available. The Palm VII would be useful beyond its wireless capabilities. Second, it leveraged an existing wireless network in BellSouth Wireless Data's Mobitex system. Because of its wide deployment, users discovered that they could use it all across the nation. Finally, Palm, Inc. created a Web content delivery technology called Web clipping. Based on Hypertext Markup Language (HTML), Web clipping content is optimized for Palm OS devices and the network capacity of the Mobitex network.

Combee at 2. Combee discusses in detail Palm OS's web content delivery system, called "Web clipping":

> *Web clipping* is the name Palm, Inc. created for their Web content delivery system designed for their line of Palm OS devices. Using the word *Web* in the title is obvious: HTML is the standard language to define content on the World Wide Web. *Clipping* is based off the name of the content browser application for Palm OS devices: Clipper.

Combee at 2.

Additional mobile web-related functionality is described at "Mobile Commerce: Opportunities, Applications, and Technologies of Wireless Business," by Paul May, with a copyright date of 2001 ("May"). For example, May describes AvantGo:

> AvantGo is the prime Web content service for the handheld device market. Beginning with the Palm platform, extending to the Windows CE/PocketPC operating system and thereafter to cell phone micro-browsers, AvantGo's technology accesses standard Web sites and repackages them for use on mobile devices. Some 350 leading sites have created special versions of their sites for use with AvantGo, but any site can be accessed by AvantGo and rendered for the mobile device. Adding sites, or content channels, to the user's account can be done by selecting from the optimised sites listed in the menus at AvantGo's site. The optimised sites include branded news, stock prices, flight information, and entertainment listings. Alternatively, using a piece of script supplied by AvantGo as a button for the user's Web browser, the user can add any Web site to his account as if making a bookmark or favourite. AvantGo does not charge for its service.

May at 78. AvantGo explicitly included "content channels suitable for mobile devices." May at 80.

May also describes numerous types of mobile devices:

Pagers, Phones, and PDAs

The stripped-down take on electronic commerce makes e-commerce an efficient means of ordering goods and services online. In this view, e-commerce is no more nor less than paperless catalogue shopping. We can port this no-frills definition to the mobile commerce dimension by picking up a device such as Motorola's Timeport Wireless Communicator. This smart pager receives and transmits pager and e-mail messages, vibrating when new items arrive. Motorola's PageWriter 2000X is another example of a smart pager. The hand-sized device opens to reveal a small screen and keyboard and can be used to send and receive both pages and regular e-mail. The popular BlackBerry from Research in Motion (RIM) also lets users send and receive e-mail, duplicating their desktop-based e-mail in- and out-boxes. The same company's RIM 957 adds a BlackBerry-style QWERTY keyboard beneath a Palm-style screen, creating a PDA-format device with added WAP browser and built-in wireless modem.

If consumers are happy with text-based communications, then two-way paging is a suitable platform for delivering basic mobile commerce services. However, pagers have two drawbacks. First, pagers do not have the processing power to offer any interesting additional functionality to users. Second, pagers are not phones. Pagers' limited functionality condemns them to niche roles in environments with poor alternative connectivity.

Europeans regard pager use as a curious facet of American life: a sudden reminder that daily life hasn't become completely homogenised across the western world. European and American messaging behaviours have been dictated by systems availability. Paging creates a near-universal text communications system for North America, while SMS is a built-in text messaging capability incorporated in GSM services. Neither is inherently superior to the other, and both are likely to coexist with enhanced e-mail capabilities on other platforms. Cell phones incorporating pagers are starting to become common in the U.S. market.

MDT Exhibit 2027
IPR2025-00539
Page 76

Messaging capabilities tend to drive the ownership of mass market mobile devices, but such capabilities do not represent a complete framework for conducting mobile commerce. Phones enabled for WAP (described elsewhere in this chapter) are becoming the de facto platform for mass market mobile commerce services in regions where GSM predominates. Although WAP is a standard, the term has variable meanings in the commercial setting. A WAP service developed by a European provider may be accessible by WAP users in the United States as well as Europe. However, some services labelled as WAP services by U.S. providers are inaccessible to European users because these services actually use HDML (Handheld Device Markup Language), a predecessor to WML (Wireless Markup Language) that is not supported by most WAP browsers in the European market.

Many WAP phones look little different than standard GSM cell phones, though they often sport larger LCD displays. The four function keys of the GSM phone are used to control WAP functionality, with the up/down scrolling keys allowing the user to read WAP cards and choose from menus.

Europe's fascination with WAP phones rapidly spread to the United States in the first half of 2000. However, Sony's CMD-Z5 cell phone, first shown in mid-2000, includes Microsoft's more-than-WAP Mobile Explorer browser. Mobile Explorer renders HTML sites and also supports XML, begging the often-asked question whether WAP's WML has an independent future of its own.

Contemporary cell phones pack a range of features alongside WAP functionality, including calculators, calendars, alarms, and games. Such capabilities have been borrowed from the world of PDAs (Personal Digital Assistants), or pocket computers.

May at 183-84.

Hybrid Devices

How many personal electronic devices can a traveller carry? Today's executive needs a laptop to access corporate systems, a PDA containing her schedule, and a multiband cell phone. She may also want to

take her MP3 player with her, as well as an audio notetaker and a camera.

The urge to meld these different device types into single packages is producing a generation of device hybrids. In the absence of a single device to perform every imaginable function, mobile device manufacturers target novel feature additions in their attempts to gain market share. The principal sales driver is currently felt to be the LAT factor: industry argot for "look at this!"[13]

3G videophones have the highest LAT value, allowing owners to share their sense of live connection with non-owners. Prototype 3G devices from manufacturers such as Sony, Panasonic, and Ericsson twist the phone format to create music-phones, still-camera-phones, and PDA-phones as well as videophones. Ericsson's prototype Communicator of early 2000 is visually similar to a PDA, the earpiece-and-bead plug-in being the only reminder of a conventional cell phone. The Communicator promises WML and HTML Web access, GPS location finding, and PDA functions such as address book and calendar. Built for the EPOC operating system, the Communicator will be launched in the GPRS timeframe. Motorola's Accompli A6188 phone looks like a PDA with added antenna and integral cover and has typical PDA functions, including PC synchronisation as well as a WAP browser.

May at 185-86.

Notably, mobile devices are described in the Asserted Patents to include "a wide variety of different devices," including "a mobile telephone, a personal digital assistant (PDA), a palmtop computer, a hand-held computer, a laptop computer, a tablet computer, a global positioning system (GPS) receiver or other GPS-based navigational device, an MP3 player or other type of audio player, a pager, a watch or other timepiece, a camera, a portable game player, etc." *See, e.g.*, '336 patent, 4:28-40. A "network suitable for use with the invention may include any type of data communication network, including the Internet, an intranet, an extranet, a wide area network (WAN), a metropolitan area network (MAN), a wired local area network (LAN), an IEEE 802.11 or Wi-Fi wireless LAN, a satellite communications network, a virtual private network (VPN), a public switched telephone network (PSTN), a cellular network based on third generation (3G) wideband code division multiple access (CDMA) or other standard, as well as portions or combinations of these and other networks."

Id., 4:5-17. In view of the specification, therefore, a mobile device could be a laptop computer, and a wireless network could be an IEEE 802.11 or Wi-Fi wireless LAN. In view of these disclosures, any reference or system that discloses the use of a general purpose computer as a client/end-user device would inherently disclose the use of a laptop computer, or "mobile device" under the relevant Asserted Claims. Similarly, any reference or system that discloses a network-based communication system would inherently disclose the use of an IEEE 802.11 or Wi-Fi wireless LAN.

To the extent such disclosures were not inherent, combination with each of the charted references (each of which disclose computer-based networking systems), and/or the below would have been obvious for any such system, as laptops and Wi-Fi based modems were well-known, routine, conventional, and widely available well before June 18, 2002:

For example, a paper titled "Wireless Local Area Networks and the 802.11 Standard," by Plamen Nedeltchev (dated March 31, 2001) ("Nedeltchev") explains:

> Support for wireless local area networks (WLANs) in corporate offices and employee's homes is becoming a necessary activity for networking professionals, requiring new knowledge and training. The purpose of the article is to provide readers with a basic understanding of the 802.11 techniques, concepts, architecture and principles of operations. The standard was designed as a transmission system between devices by using radio frequency (RF) waves rather than cable infrastructure, and it provides mobile, cost-effective solutions, significantly reducing the network installation cost per user. Architecturally, WLANs usually act as a final link between end user equipment and the wired structure of corporate computers, servers and routers.

Nedeltchev at 3.

For example, as of August 12, 2001, IBM ThinkPad T Series came with "integrated 802.11b wireless technology":

Notebooks: ThinkPad

A better e-xperience

THE NEW THINKPAD T SERIES

Integrated 802.11b wireless technology
and the IBM embedded security subsystem
provide secure communications with or without wires

ThinkPad: Select from the following

ThinkPad T Series

from **$2,199.00** IBM Web Price*

Perfect balance of performance and portability

- For highly mobile users who work in the office, on the road and everywhere in between
- Travel weight starting at 4.7lb, up to 14.1" TFT display
- Removable drive bay, Titanium Composite cover

Visual tour

https://web.archive.org/web/20010812225130/http://commerce.www.ibm.com:80/cgi-bin/ncommerce/CategoryDisplay?cgrfnbr=2035724&cntrfnbr=1&cgmenbr=1&cntry=840&lang=en_US; *see also* http://www.cnn.com/2001/TECH/ptech/04/17/top.notebooks.idg/index.html (listing 15 top laptops, dated April 17, 2001).

Cheng discloses a technique for translating the pages of existing (non-mobile) websites into a format suitable for display on a mobile device. Cheng, Abstract ("A system, method, and computer readable medium for reformatting web content into a format readable on one or more mobile devices is provided."). Cheng explains that "[b]ecause of the explosion of mobile enterprise solutions, users

of wireless devices now demand that businesses deliver web content for viewing on desktop, or mobile/portable (e.g., handheld) devices." Cheng, 1:19-22. Cheng explains that, in many situations, this "generally required organizations to develop and maintain multiple sets of content, one for viewing in a desktop environment, and others for viewing on each individual type of mobile device." Cheng, 1:28-32. Cheng addresses this issue by disclosing a system and method for dynamically reformatting or converting existing web content into a format suitable for a mobile device. Cheng, *e.g.*, 2:19-32, 3:21-26. Figure 1 illustrates an architecture 100 of one embodiment of the system and method of Cheng:

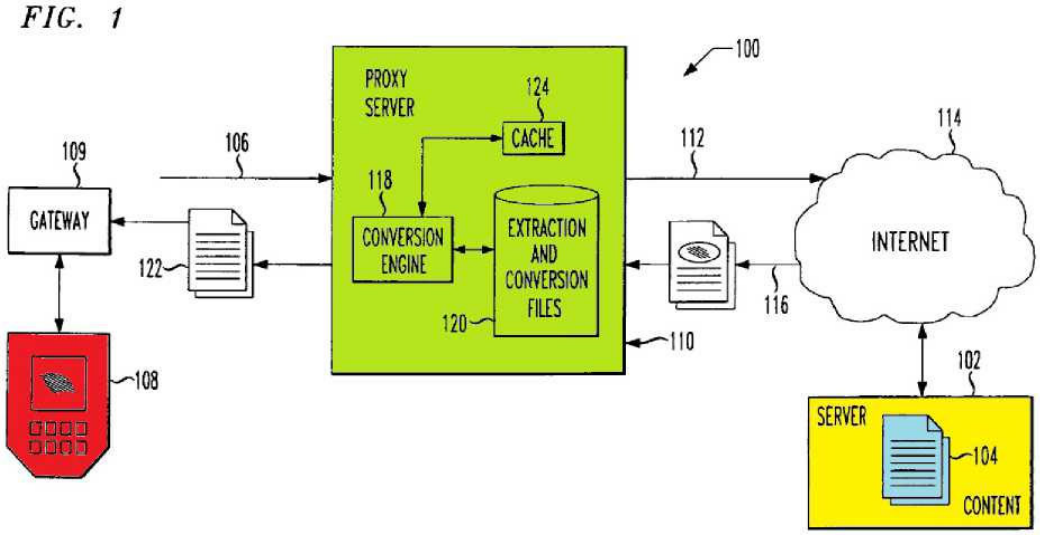

Cheng, Fig. 1 (color annotation added).

Cheng discloses a format conversion proxy server that translates web pages and requests between mobile device **108** and proxy server **110**. As Cheng explains and consistent with known proxy server techniques, proxy server **110** "'sits' between the clients (e.g., the mobile device(s) **108**) and the origin web server(s) **102** that provide Web content **104**." Cheng, 3:31-33. Proxy server **110** "obtains the code (e.g., HTML) of the user requested web page **104**, and modifies it at the proxy server **110** (once obtained)," which can include "reformatting and/or converting an entire web site or request specific Web content that is needed from the origin web server **102**." Cheng, 3:41-48. Proxy server

110 can store a device profile for mobile device **108** based on the type of mobile device and its web browser. Cheng, 5:20-23 ("To create a device profile, both the specific version of a mobile device **108** and its web browser (e.g., a Palm V with browser A, etc.) are needed.").

Cheng explains that, by using the disclosed proxy server conversion method:

> Embodiments of the present invention contemplate that web-based content can be created one time, whereafter at least a portion thereof is extracted, reformatted, and transmitted to, for example, one or more handheld device browsers (e.g., the Palm Web Clipping Browser from Palm, Inc., Santa Clara, Calif., Pocket Internet Explorer from Microsoft Corp, Redmond, Wash., and Wireless Access Protocol (WAP) on smart phones, etc.). This create-once, deliver-everywhere approach eliminates the need to build and maintain separate web pages for different devices and browsers, as well as the need to install proprietary browser software on the handheld device(s).

Cheng, 2:8-19.

A POSITA would have had a reasonable expectation of success in making any of the above such modifications. A POSITA would have understood that these references, as well as the POSITA's knowledge, disclose interrelated teachings based on routine technologies and would have been amenable to various well-understood and predictable combinations.

(3) Adding Content for Sharing with Other Users Via a First Interface and Providing Access to Content in a Second Interface

Numerous independent Asserted Claim disclose elements that comprise adding content for sharing with other users via a first interface and providing access to that content in a second interface. In addition, claim 25 of the '336 patent discloses that "at least a portion" of this content is "authored by the first user."

Nothing about these claim limitations add anything novel or non-obvious over the prior art. To the contrary, each of these elements were well-known, routine, conventional, and widely available long before the alleged invention(s) of the Asserted Patents, as they comprise core features of interactive channels, such as chatrooms and chat applications, forums, blogs, data sharing websites or

applications, community and collaboration applications, and web-based event planning and electronic invitation services.

Including the ability to provide content to share with others via a first interface and for other users to have access to that content via a second interface in an interactive channel would have been obvious to a person of ordinary skill in the art at least because doing so would have involved the combination of prior art elements according to known methods to yield predictable results, the simple substitution of one known element for another to obtain predictable results, the application of a known technique to a known device ready for improvement to yield predictable results, and/or would have been obvious to try. Moreover, a person of ordinary skill in the art would have readily appreciated the well-known and widespread use of content sharing via mobile and web-based interfaces and the associated benefits and advantages of their use. Persons of ordinary skill in the art would have been motivated to combine the teachings of these references with any other network- and/or web-based communication system in order to provide additional interactivity and content to such a system.

As the attached claim charts demonstrate, providing content to share with others via a first interface and for other users to have access to that content via a second interface was known in the art. Specific disclosures, which are purely exemplary, from charted references Alcorn, Austin, Blackboard, Enete, Event411, Frolick, Harvey, Jameson, LiveJournal, Miller, Robinson, Tam, Underwood, Yahoo, Forsyth, Randall, Tornabene, Eck, Pelkey, Casio Cassiopeia E-125 System, Compaq iPAQ System, mMode System, Nokia 9210 System, and additional prior art discussed below (collectively the ***Adding Content*** and ***Content Access*** references) are set forth in the attached charts for charted references, which include motivations to combine and disclosures of providing content to share with others via a first interface and for other users to have access to that content via a second interface, and below for additional prior art:

For example, U.S. Patent No. 6,415,316 to Joannes Van Der Meer ("Van Der Meer") discloses a system that "allows a user to create a 'diary'" on the web, which can include content from "content providers," from "diaries of other users," and "entered by the diary owner himself." Van Der Meer at 2:2-11. Van Der Meer explains that a user can "set various levels of privacy for different portions of his diary." *Id.*, 2:40-41. The diary owner can add or modify content entries and notes of their diary. *Id.* at 10:55-67, 11:42-12:28, 12:44-14:2.

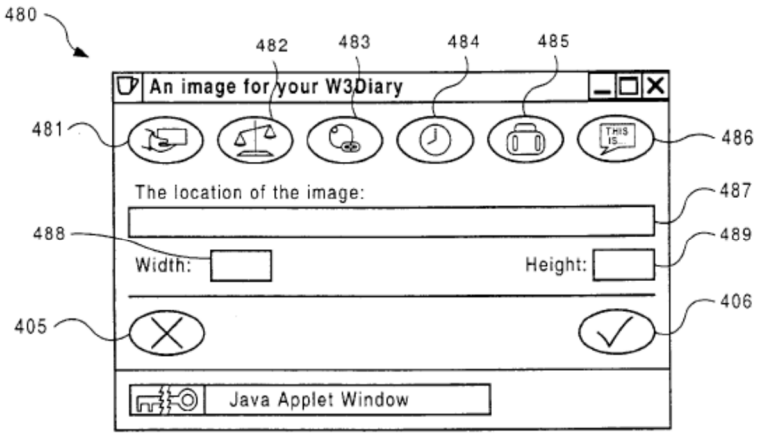

Figure 4(h)

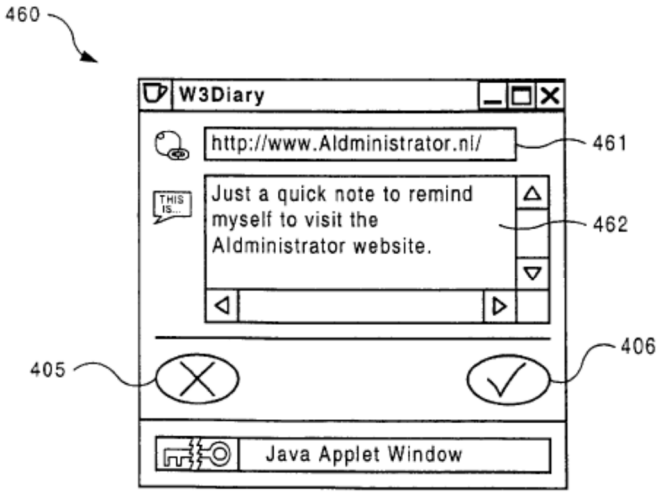

Figure 4(e)

Id. at Fig. 4(h), 4(e).

In addition, U.S. Patent No. 6,020,884 to Bruce MacNaughton, et al. (originally assigned to AOL, and now assigned to Meta) ("MacNaughton"), discloses a "Community" system that includes numerous "interaction components," that "enable aspects of community experiences for users and allows them to engage in on-going social relations." MacNaughton at 4:15-19. These components can include "message boards (or forums), chat, community bookmarks, gaming, and voting." *Id.* at 4:19-21; *see also id*. at 4:28-5:15, 7:37-56.

A POSITA would have had a reasonable expectation of success in making any of the above such modifications. A POSITA would have understood that these references, as well as the POSITA's knowledge, disclose interrelated teachings based on routine technologies and would have been amenable to various well-understood and predictable combinations.

(4) Activation of a Channel

Certain Asserted Claims disclose that a user is able to "activate" a mobile information channel. *See* '336 patent, claims 1, 11, 15; '801 patent, claims 1, 23, 25. Nothing about these claim limitations add anything novel or non-obvious over the prior art. To the contrary, the ability of a user to activate a channel as disclosed in the Asserted Claims was well-known, routine, conventional, and widely available long before the alleged invention(s) of the Asserted Patents, particularly in the context of website creation and content authoring.

Incorporating the functionality whereby selection of pre-defined channels causes them be visible in interactive environments (such as those described in the charted prior art) would have been obvious to a person of ordinary skill in the art at least because doing so would have involved the combination of prior art elements according to known methods to yield predictable results, the simple substitution of one known element for another to obtain predictable results, the application of a known technique to a known device ready for improvement to yield predictable results, and/or would have been obvious to try. Moreover, a person of ordinary skill in the art would have readily appreciated

the well-known and widespread use of permitting users to select/activate such channels and the associated benefits and advantages of their use. Persons of ordinary skill in the art would have been motivated to combine the teachings of these references with any other network- and/or web-based communication system in order to provide additional customization and content to such a system, and in the context of the mobile web, to limit the number of channels visible in a small space.

As the attached claim charts demonstrate, selecting channels to be visible in a mobile application or on a website was known in the art. Specific disclosures, which are purely exemplary, from charted references Alcorn, Austin, Blackboard, Enete, Event411, Frolick, Harvey, Jameson, LiveJournal, Miller, Robinson, Tam, Underwood, Yahoo, Forsyth, Randall, Tornabene, Eck, Pelkey, Casio Cassiopeia E-125 System, Compaq iPAQ System, mMode System, Nokia 9210 System (collectively the ***Channel Activation*** references) are set forth in the attached charts which include motivations to combine and disclosures of selecting channels to be visible on a mobile application and/or website.

A POSITA would have had a reasonable expectation of success in making any of the above such modifications. A POSITA would have understood that these references, as well as the POSITA's knowledge, disclose interrelated teachings based on routine technologies and would have been amenable to various well-understood and predictable combinations.

(5) Receiving Additional Content and Messaging

Numerous Asserted Claims disclose the ability for additional users to add content, such as photos and messages, and to continue interactions with the first user via an interactive system. *See* '336 patent, claims 1, 11, 15, 27; '801 patent, claims 1, 7, 23, 25; '039 patent, claims 4, 13, 23; '578 patent, claim 15; '348 patent, claims 1, 8, 9, 13, 14, 17, 18. In addition, claim 23 of the '336 patent discloses that the "messaging content comprises at least one of an image, a video, a short message service (SMS) message and a multimedia message service (MMS) message," and claim 24 of the '336

patent discloses that the "messaging content comprises at least one of announcements, notes, surveys, promotions and contests."

Nothing about these claim limitations add anything novel or non-obvious over the prior art. To the contrary, each of these elements were well-known, routine, conventional, and widely available long before the alleged invention(s) of the Asserted Patents, as they, again, comprise core features of interactive channels, such as chatrooms and chat applications, forums, blogs, data sharing websites or applications, community and collaboration applications, and web-based event planning and electronic invitation services.

Including the ability for additional users to provide content to share with the original users and each other would have been obvious to a person of ordinary skill in the art at least because doing so would have involved the combination of prior art elements according to known methods to yield predictable results, the simple substitution of one known element for another to obtain predictable results, the application of a known technique to a known device ready for improvement to yield predictable results, and/or would have been obvious to try. Moreover, a person of ordinary skill in the art would have readily appreciated the well-known and widespread use of functionality allowing additional users to provide content such as comments, messages, announcements, notes, surveys, promotions, contests, and media such as images, audio, messages, and video, on interactive network-based systems, and the associated benefits and advantages of their use. As disclosed in numerous charted references (such as the LiveJournal, Evite, Casio Cassiopeia E-125, Compaq iPAQ, mMode, Nokia 9210 systems), integration of such interactive systems with, for example, SMS functionality was also well known. Persons of ordinary skill in the art would have been motivated to combine the teachings of these references with any other network- and/or web-based communication system in order to provide additional interactivity and content to such a system.

As the attached claim charts demonstrate, permitting users to provide additional content, such as messaging and media content, was known in the art. Specific disclosures, which are purely exemplary, from charted references Alcorn, Austin, Blackboard, Enete, Event411, Frolick, Harvey, Jameson, LiveJournal, Miller, Robinson, Tam, Underwood, Yahoo, Forsyth, Randall, Tornabene, Eck, Pelkey, Casio Cassiopeia E-125 System, Compaq iPAQ System, mMode System, Nokia 9210 System and additional exemplary prior art discussed below (collectively the ***Additional Messaging/Content*** references) are set forth in the attached charts for charted references, which include motivations to combine and disclosures of users providing additional content, and below for additional prior art:

For example, as discussed above, MacNaughton discloses a "Community" system that includes numerous "interaction components," that "enable aspects of community experiences for users and allows them to engage in on-going social relations." MacNaughton at 4:15-19. These components can include "message boards (or forums), chat, community bookmarks, gaming, and voting." *Id.* at 4:19-21; *see also id*. at 4:28-5:15; 7:37-56.

A POSITA would have had a reasonable expectation of success in making any of the above such modifications. A POSITA would have understood that these references, as well as the POSITA's knowledge, disclose interrelated teachings based on routine technologies and would have been amenable to various well-understood and predictable combinations.

(6) Wireless Network Functionality

Numerous Asserted Claims disclose obtaining or using "information" relating to a "wireless networking functionality." '801 patent, claims 1, 7-8, 23, 25; '039 patent, claims 1, 8, 9, 18, 19, 23; '578 patent, claims 1, 9, 12, 21. Examples of such wireless networking functionality in the Asserted Claims include "location information," "messaging actions," and "collaboration actions" (discussed in Sections IV.B.1(b)(5), (8), and (13)).

Nothing about these claim limitations add anything novel or non-obvious over the prior art. To the contrary, each of these elements were well-known, routine, conventional, and widely available long before the alleged invention(s) of the Asserted Patents, as it was well known to use information relating to wireless networking functionality of wireless networks and/or mobile devices in mobile systems such that the ones disclosed in the charted prior art.

Using and collecting information regarding wireless networking functionality, in the manners described in the Asserted Claims, would have been obvious to a person of ordinary skill in the art at least because doing so would have involved the combination of prior art elements according to known methods to yield predictable results, the simple substitution of one known element for another to obtain predictable results, the application of a known technique to a known device ready for improvement to yield predictable results, and/or would have been obvious to try. Moreover, a person of ordinary skill in the art would have readily appreciated the well-known and widespread use of information regarding wireless networking functionality in mobile systems, and the associated benefits and advantages of their use. Persons of ordinary skill in the art would have been motivated to combine the teachings of these references with any other network- and/or web-based communication system that is also accessible on mobile devices, in order to ensure content and functionality provided by such a system matches a user's device and/or wireless network.

As the attached claim charts demonstrate, the use of wireless networking functionality information in such systems was known in the art. Specific disclosures, which are purely exemplary, from charted references Alcorn, Austin, Blackboard, Enete, Event411, Frolick, Harvey, Jameson, LiveJournal, Miller, Robinson, Tam, Underwood, Yahoo, Forsyth, Randall, Tornabene, Eck, Pelkey, Casio Cassiopeia E-125 System, Compaq iPAQ System, mMode System, Nokia 9210 System, and additional prior art discussed below (collectively the ***Wireless Networking Functionality*** references)

are set forth in the attached charts for charted references, which include motivations to combine and disclosures of wireless networking functionality, and below for additional prior art:

Many references disclose using information associated with a wireless network functionality of a device, as discussed in Sections IV.B.1(b)(5), (8), and (13). As one example, U.S. Patent No. 8,458,286 to Nathanial Freitas et al. ("Freitas") discloses a system that performs a "profile operation" that determines "which Data Services are supported by the device":

> In operation, a request from a device for an update of the Advert Bundles will be received at the server 20. A profiling operation 36 will then be performed to determine the type of device submitting the request. A location determining operation 38 is also performed to determine the location of the wireless device. Based upon the profiling operation 36, an Advert Bundle Management application 40 will select the Advert Bundles appropriate for the device.
>
> Based upon the location determining operation 38, the Advert Bundles 26 selected by the Advert Bundle Management application 40 may be further filtered to select only those appropriate for the identified location. The Advert Bundles are then delivered 44 to the user device using a delivery mechanism as described above.
>
> Another important variable with wireless devices is which Data Services are supported by the device. For instance, most mobile handsets support the Wireless Application Protocol (WAP), which uses an HTTP "browser" type transport to deliver data. However, they also support the Short Message Service (SMS) for push or instant message-type transactions. This information would be determined during the profiling operation 36 and the Advert Bundles selected by the Advert Bundle Management application 40 would be appropriate for the device.

Freitas at 4:62-5:19. Freitas explains that this information would be provided by the wireless devices themselves, and provides an example of targeting ads to a user of a Palm device in Manhattan:

> With respect to the location data, many wireless devices have or will have the capability of determining the current geographical location of the user. Palm, Inc.'s PalmVII and PalmVIIx both allow application developers to determine the current location of the user down to the zip code. It should be understood that the advertising architecture of the present invention does not provide the location data. Instead, this data

> is provided by the wireless devices and may be different for different devices.
>
> As part of the device profiling capabilities location data can be accessed as available by specific devices. This data can be used to filter which Advert Bundles get delivered to which users. This feature is extremely important for context-based filtering of data including advertisements. For instance, if a Palm user is using an application in Manhattan, advertisements may be targeted to goods or services provided in Manhattan.

Freitas at 5:19-35.

A POSITA would have had a reasonable expectation of success in making any of the above such modifications. A POSITA would have understood that these references, as well as the POSITA's knowledge, disclose interrelated teachings based on routine technologies and would have been amenable to various well-understood and predictable combinations.

(7) Device-Captured Data

Numerous Asserted Claims disclose obtaining content from "a device-captured data source," including sources of "video data," "image data," "audio data," and "location coordinates." '336 patent, claim 7; '039 patent, claim 13; '578 patent, claim 15. The '348 patent further discloses receiving "device-captured data" from each of two mobile devices. '348 patent, claims 1, 8, 13, 14, 17, 18. The '578 patent discloses designation of a content item "comprising media data captured by the mobile device." '578 patent, claims 1, 9, 12, 15, 21. The '039 patent discloses "capturing content at a mobile device" and "providing the captured content" to a server. '039 patent, claim 1.

Nothing about these claim limitations add anything novel or non-obvious over the prior art. To the contrary, each of these elements were well-known, routine, conventional, and widely available long before the alleged invention(s) of the Asserted Patents, as it was well known to add media content such as image data, video data, and audio data[6] to interactive channels, such as chatrooms and chat

[6] Location information is addressed in the next section.

applications, forums, blogs, data sharing websites or applications, community and collaboration applications, and web-based event planning and electronic invitation services.

Including the ability to share media content with others in an interactive website, in the manners described in the Asserted Claims, would have been obvious to a person of ordinary skill in the art at least because doing so would have involved the combination of prior art elements according to known methods to yield predictable results, the simple substitution of one known element for another to obtain predictable results, the application of a known technique to a known device ready for improvement to yield predictable results, and/or would have been obvious to try. Moreover, a person of ordinary skill in the art would have readily appreciated the well-known and widespread use of sharing media content, including media captured by a user's own devices (such as a digital camera, web cam, or other mobile device) and/or uploaded from a user's mobile device(s), and the associated benefits and advantages of their use. Persons of ordinary skill in the art would have been motivated to combine the teachings of these references with any other network- and/or web-based communication system in order to provide additional interactivity and content to such a system.

As the attached claim charts demonstrate, capturing content by a mobile device and uploading that content from the mobile device was known in the art. Specific disclosures, which are purely exemplary, from charted references Alcorn, Austin, Blackboard, Enete, Event411, Frolick, Harvey, Jameson, LiveJournal, Miller, Robinson, Tam, Underwood, Yahoo, Forsyth, Randall, Tornabene, Eck, Pelkey, Casio Cassiopeia E-125 System, Compaq iPAQ System, mMode System, Nokia 9210 System, and additional prior art discussed below (collectively the ***Device-Captured Data*** references) are set forth in the attached charts for charted references, which include motivations to combine and disclosures of providing content to share with others via a first interface, and below for additional prior art that discloses capturing content by a mobile device and uploading that content from the mobile device:

For example, U.S. Patent Application Publication No. 2002/0072982 to Christopher Barton et al. ("Barton") discloses a system whereby a user can "capture a sample of an experiential environment and deliver that sample to an interactive service." Barton at Abstract. Barton discloses a mobile device capturing samples of audio or video and uploading them to a service provider. *See* Barton at ¶¶ [0012], [0014], [0027-0028].

Similarly, U.S. Patent No. 2002/0065927 to Craig Janik discloses a system including both a Personal Digital Assistant (PDA) and a wireless LAN adaptor ("such as IEEE 802.11b and HomeRF"). Janik ¶¶ [0025], [0036]. The combination of a PDA and a wireless LAN adaptor is shown in Figure 2, described as follows:

> As shown in FIG. 2, PDA 36 docks with wireless LAN adapter 40 with a spring loaded mechanical attachment that includes a latch hook 284. The latch hook 284 is shown in FIG. 3. In one example where the PDA 36 is a Palm, and Palm Computing provides a reference design for connecting to the PalmV with the use of a small slot on the bottom side of the PalmV housing. PDA 36 is released from wireless LAN adapter 40 by pressing button 176. Electrical contacts on the rear end of PDA 36 make contact with electrical contacts on wireless LAN adapter 40 in order to establish a data communication link.

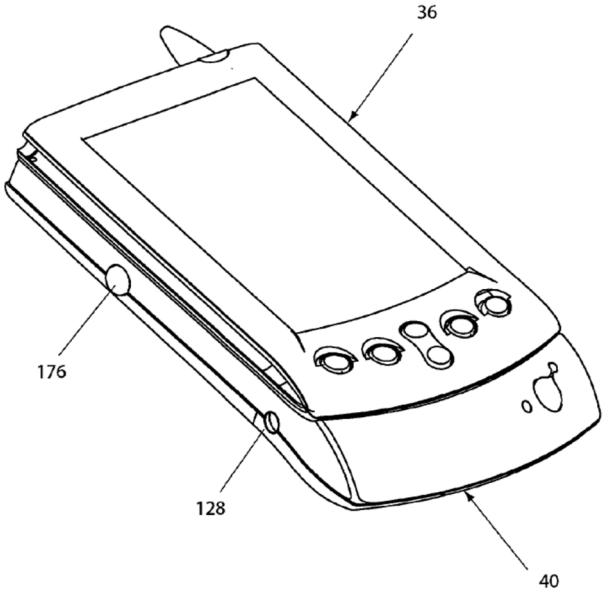

Janik ¶ [0044], Fig. 2. The wireless LAN adaptor is described as follows:

> FIG. 5 shows a block diagram of the electrical components in wireless LAN adapter 40. Motherboard 156 electrically connects components including a microprocessor 115, dynamic memory (DRAM) 116, programmable (flash) memory 118, a power regulation and battery charging sub-system 124, a digital signal processor (DSP), battery 104, a headset jack 184, and a stereo audio out jack 128. A wireless LAN transceiver 44 is functionally connected to motherboard 156.
>
> In one embodiment, wireless LAN adapter 40 also includes a digital-to-analog converter (DAC) for converting the uncompressed digital information into analog signals that are presented at the stereo audio out jack 128. Microprocessor 115 in combination with DRAM memory 116 executes instructions from the real time operating system 92 and control firmware 96. In an alternative embodiment, wireless LAN adapter 40 includes a charge-coupled device (CCD) chip and a lens, the function of which will be explained later in this disclosure.

Janik ¶¶ [0047-0048]. The combination of the wireless LAN adaptor with the PDA permits numerous functionalities, including capturing audio, images, and video on this mobile device:

> System Function—Voice-Recording Mode
>
> In one embodiment, DSP and microprocessor 115 constitutes a audio digitizing subsystem that can be used to digitize voice messages. A GUI on PDA 36 allows the user to initiate and stop a recording interval, similar to controls on many audio recording devices. As the recording is taking place, the audio signal is digitized and sent in large blocks that are re-constructed by system control application 64. The resulting audio files are stored on PC, or can be sent other users as email attachments. The GUI on PDA 36 also includes an address book for selection the recipient of the audio message.
>
> System Function—Image Data Transfer
>
> Image data transfer occurs in two modes: still camera function and video camera function. In one embodiment, the wireless LAN adapter 40 includes a CCD chip and lens subsystem. The output of a CCD ship is a single frame or a sequence of frames that are an array of pixels. In still image transfer mode, one digital frame is sent to PC via wireless LAN communication link 48 and stored in database 68. This digital image can be saved in a variety of standard image formats such as JPEG or TIFF formats. A GUI on PDA 36 provides for activation of the still image camera function.
>
> In video camera mode, digital video frames are captured by the CCD subsystem and encoded in MPEG-4 format, and sent in real time via the wireless LAN communication link, to system control application 64. A

> video compilation software application that is an element of system control application 64 appends these frames into an MPEG-4 video file. In an alternative embodiment, the MPEG-4 stream can be routed by the server module 76 to a server on the Internet 8 where the stream can be accessed by a third party. A GUI on PDA 36 allows for the starting and stopping of streaming video from wireless webpad 32.

Janik ¶¶ [0077-0079].

In addition, U.S. Patent No. 6,300,947 to Dimitri Kanevsky ("Kanevsky") discloses the wide variety of mobile devices that have web browsing ability, including digital cameras:

> It is to be appreciated that the client machine 100 may take many forms given the various existing types of devices having displays capable of viewing web site related data, e.g., personal computer (PC), multiscreen PC, laptop computer, webphone. However, the present invention is not limited to only these machines and may be implemented with other diverse client machines adapted to have communication and browsing ability, e.g., palmtops, calculator, web TV, remote control devices, clocks, digital cameras, vehicle-based computers, industrial facility-based computers.

Kanevskey 5:5-19.

And May describes "hybrid devices" including "videophones" and "still-camera-phones":

Hybrid Devices

How many personal electronic devices can a traveller carry? Today's executive needs a laptop to access corporate systems, a PDA containing her schedule, and a multiband cell phone. She may also want to take her MP3 player with her, as well as an audio notetaker and a camera.

The urge to meld these different device types into single packages is producing a generation of device hybrids. In the absence of a single device to perform every imaginable function, mobile device manufacturers target novel feature additions in their attempts to gain market share. The principal sales driver is currently felt to be the LAT factor: industry argot for "look at this!"[13]

3G videophones have the highest LAT value, allowing owners to share their sense of live connection with non-owners. Prototype 3G devices from manufacturers such as Sony, Panasonic, and Ericsson twist the phone format to create music-phones, still-camera-phones, and PDA-phones as well as videophones. Ericsson's prototype Communicator of early 2000 is visually similar to a PDA, the earpiece-and-bead plug-in being the only reminder of a conventional cell phone. The Communicator promises WML and HTML Web access, GPS location finding, and PDA functions such as address book and calendar. Built for the EPOC operating system, the Communicator will be launched in the GPRS timeframe. Motorola's Accompli A6188 phone looks like a PDA with added antenna and integral cover and has typical PDA functions, including PC synchronisation as well as a WAP browser.

May at 185-186.

Furthermore, U.S. Pat. No. 6,434,403 to Ausems ("Ausems") discloses a portable mobile device that combines the functionality of a PDA with a wireless telephone. Ausems, 3:5-8. This PDA telephone device 100 includes, among other things, a touchscreen display. Ausems, *e.g.*, 1:57-58, 4:30-39, 6:9-14. The PDA telephone 100 in Ausems can also run a conventional mobile operating system such as Microsoft Windows CE or Palm, and the operating system "may include a web browser in order to facilitate Internet access for a PDA telephone 100." Ausems, 7:64-8:5. The device includes a camera for recording and storing images, which can be transmitted. Ausems, *e.g.*, 2:5-6, 5:17-18

("Camera 190 records video images and stores them within. Additionally, video images recorded by camera 190 may also be transmitted from PDA telephone 100 in real time during a telephone call (thus allowing for video conferencing)."), 2:5-6 ("[T]he device also includes [a] digital camera for recording images….").

Additionally, Michaeli, U.S. Pat. App. Publ. No. 2002/0093493 ("Michaeli") discloses "a hand held and operable Internet access/personal digital assistant (PDA)/cellular communication device comprising a housing being sufficiently small so as to be held by one hand of a user; and an integral or mountable digital camera pivotally engaged by the housing." Michaeli, ¶ 0006. Michaeli discloses that the camera is "capable of capturing still or video images," Michaeli, ¶ 0040, and is "capable of accessing the Internet, processing data, and communicating with another user" using "a communications network," Michaeli, ¶ 0041.

Further, Casio Cassiopeia E-125 System, Compaq iPAQ System, mMode System, and Nokia 9210 System included these features.

A POSITA would have had a reasonable expectation of success in making any of the above such modifications. A POSITA would have understood that these references, as well as the POSITA's knowledge, disclose interrelated teachings based on routine technologies and would have been amenable to various well-understood and predictable combinations.

(8) Location Information

Numerous Asserted Claims disclose obtaining content relating to a user's location, including "location coordinates" and "location-based service[s] information." ('336, claim 7; '039, claim 13).

Nothing about these claim limitations add anything novel or non-obvious over the prior art. To the contrary, each of these elements were well-known, routine, conventional, and widely available long before the alleged invention(s) of the Asserted Patents, as it was well known to use location data with interactive, mobile systems such that the ones disclosed in the charted prior art.

Including the ability to share location information with the interactive system or to use location information in determining content to show a user, in the manners described in the Asserted Claims, would have been obvious to a person of ordinary skill in the art at least because doing so would have involved the combination of prior art elements according to known methods to yield predictable results, the simple substitution of one known element for another to obtain predictable results, the application of a known technique to a known device ready for improvement to yield predictable results, and/or would have been obvious to try. Moreover, a person of ordinary skill in the art would have readily appreciated the well-known and widespread use of location data in mobile systems, and the associated benefits and advantages of their use. Persons of ordinary skill in the art would have been motivated to combine the teachings of these references with any other network- and/or web-based communication system, particularly one that is also accessible on mobile devices, in order to provide additional functionality to facilitate users' meeting in person, locating each other at events, or providing directions to events, as well as to provide the ability to offer targeted, relevant located-related content (including advertisements) to users of such a system. In addition, the ability to associate a location with media such as an image or video would have provided a clear benefit by improving the classification and enjoyment of shared media.

As the attached claim charts demonstrate, the use of location information in such systems was known in the art. Specific disclosures, which are purely exemplary, from charted reference LiveJournal, Forsyth, Randall, Yamamoto, Tornabene, Eck, Pelkey, Casio Cassiopeia E-125 System, Compaq iPAQ System, mMode System, and Nokia 9210 System, and additional prior art discussed below (collectively the ***Location Information*** references) are set forth in the attached charts for charted references, which include motivations to combine and disclosures of the use of location information, and below for additional prior art:

For example, Combee discusses how mobile web based systems on Palm OS devices "afford[] the user to tailor his or her experience based on physical location":

> One of the unique capabilities of mobile Web access is the ability it affords the user to tailor his or her experience based on physical location. Palm OS Web clipping supports this through U.S. Postal Service Zone Improvement Plan (ZIP) Code information that can be provided for the device.
>
> Each Palm VII device communicates with Palm.Net via a BellSouth Mobitex base station. The wireless system keeps track of the base station with which a Palm VII device is communicating, and also the ZIP Code of each base station. By correlation, the wireless system can determine the ZIP Code of a Palm VII device.
>
> Using ZIP Code information is a way to make your applications position-sensitive. You will find that despite some technical challenges, ZIP Code interpretation can greatly improve the user experience. Technical challenges include the need to turn ZIP Codes into coordinates and searching through a database to find coordinate-based information (for example, the closest address). It can be quite complicated, but the challenges are typically justified by the outcome.
>
> Already, many useful position-based systems exist. Weather applications use your local ZIP Code to tell you about conditions nearby. Store and bank locators can tell you the closest branch position. News sites can tailor the coverage to include both local and national stories.

Combee at 264. Combee further explains:

> **Finding a User's Position with the Palm VII**
>
> The Palm OS-specific variable %ZIPCODE is the mechanism available to WCAs to determine the current position of a Palm VII device. The %ZIPCODE variable provides a rough estimate of a device's position by referring to the ZIP Code of the base station with which it is currently communicating. Its use can make possible the existence of new and exciting applications, while enhancing others.
>
> Position-based applications include, among others, weather information, ATMs, car repair and gas, entertainment, airline arrival/departure information, real-time traffic, realty information, boating services, and news information. However, %ZIPCODE is not a perfect answer to the position question, and an understanding about its operation and limitations must be gained in order to use it appropriately.

Id. at 264-265; *see generally* Combee at 263-302 (describing how to obtain location information of a user of a Palm OS device); *see also id.* at 269-275. Similarly, May discusses the use of location

information of mobile devices using both Global Positioning System (GPS) and wireless network infrastructure. May at 84-85, 86-87, 95.

Numerous references disclose using location information to determine content to provide to a user, including advertisements. Freitas, discussed above, discloses an advertising system that uses location information. Freitas explains:

> In operation, a request from a device for an update of the Advert Bundles will be received at the server 20. A profiling operation 36 will then be performed to determine the type of device submitting the request. A location determining operation 38 is also performed to determine the location of the wireless device. Based upon the profiling operation 36, an Advert Bundle Management application 40 will select the Advert Bundles appropriate for the device.
>
> Based upon the location determining operation 38, the Advert Bundles 26 selected by the Advert Bundle Management application 40 may be further filtered to select only those appropriate for the identified location. The Advert Bundles are then delivered 44 to the user device using a delivery mechanism as described above.

Freitas at 4:62-5:8. Freitas explains that this information would be provided by the wireless devices themselves, and provides an example of targeting ads to a user of a Palm device in Manhattan:

> With respect to the location data, many wireless devices have or will have the capability of determining the current geographical location of the user. Palm, Inc.'s PalmVII and PalmVIIx both allow application developers to determine the current location of the user down to the zip code. It should be understood that the advertising architecture of the present invention does not provide the location data. Instead, this data is provided by the wireless devices and may be different for different devices.
>
> As part of the device profiling capabilities location data can be accessed as available by specific devices. This data can be used to filter which Advert Bundles get delivered to which users. This feature is extremely important for context-based filtering of data including advertisements. For instance, if a Palm user is using an application in Manhattan, advertisements may be targeted to goods or services provided in Manhattan.

Freitas at 5:19-35.

U.S. Patent No. 6,798,358 to Dennis Joyce et al. ("Joyce") is titled "Location-Based Content Delivery." Joyce discloses a system for "delivering content, such as information, advertisements, directions, and news, to a mobile terminal based on location." Joyce at Abstract; see also Joyce at 4:9-37.

In addition, U.S. Patent Publication No. 2001/0015759 to Robert Squibbs ("Squibbs") discloses a "location-informed camera" that "is provided with an arrangement for location stamping image recordings." Squibbs at Abstract. Squibbs explains that this data is then provided to a computer along with the image:

> FIG. 3 depicts a photo system in which a digital camera 3 provided with location determining means (such as a GPS receiver) is used to generate digital photos 4, each photo (also referred to as 'image data') 4 being stamped with location data indicating where the photo was taken. Other data may also be associated with each photo, such as a timestamp, a camera ID, and a user ID; such associated data (including the location data) is herein referred to as photo meta data. The photos and their meta data are downloaded by any suitable means (USB connection, removable storage device, etc) into a PC 5 where an album program 50 serves to store the photos in a photo store 7 and the photo meta data in a meta-data database 9 (each photo and its meta data being linked by a suitable key associated with both). The album program also has access to a map store 8. The stores 7 and 8 and the meta-data database can be on the PC or external.

Squibbs at ¶ [0031].

U.S. Patent Application Publication No. 2002/0034384 to Peter G. Mikhail ("Mikhail") discloses a "camera system that determines the location of the image taken and records the location coordinates and/or name." Mikhail at Abstract. Mikhail explains:

> FIG. 2 illustrates the system components of camera 200. Camera 200 is comprised the same components of camera 100 but also contains cellular transceiver 145. Cellular transceiver 145 is used to communicate with a cellular network which intern can be used to access computers located on the Word Wide Web in order to associate GPS location information with a database of location names. The GPS 110 may determine the location alone, or in combination with the cellular transceiver 145 as described by U.S. Pat. No. 5,999,126 dated Dec. 7,

> 1999 to Ito, previously incorporated by reference. Alternatively, camera 200 may not incorporate the GPS receiver but utilizes the cellular transceiver 145 in order to determine or calculate the position information in a triangulation process as previously described.

Mikhail at ¶ [0026].

> In step 330, an image is recorded on the storage media. The image may be either a still image or a continuous image.
>
> In step 340, the Information, which includes any combination of the date, time, location, and exposure information is recorded on the storage media. Step 330 may occur at the same instant as step 340, or slightly before or after step 330. In any type of camera, the Information is correlated with the image.

Id. ¶ [0029-0030].

A POSITA would have had a reasonable expectation of success in making any of the above such modifications. A POSITA would have understood that these references, as well as the POSITA's knowledge, disclose interrelated teachings based on routine technologies and would have been amenable to various well-understood and predictable combinations.

(9) Separate URLs/Locations

Claim 6 of the '336 patent discloses that "the first web-based interface is identified by a first uniform resource locator and the second web-based interface is identified by a second uniform resource locator different than the first uniform resource locator." Nothing about this claim limitation adds anything novel or non-obvious over the prior art. To the contrary, the use of different URLs for (1) content management of a website and (2) the website itself, as disclosed in the Asserted Claims, was well-known, routine, conventional, and widely available long before the alleged invention(s) of the Asserted Patents.

Incorporating the use of separate URLs for content management and viewing of content in the context of websites, community/collaboration systems, blogs, and other systems described in the charted prior art would have been obvious to a person of ordinary skill in the art at least because doing

so would have involved the combination of prior art elements according to known methods to yield predictable results, the simple substitution of one known element for another to obtain predictable results, the application of a known technique to a known device ready for improvement to yield predictable results, and/or would have been obvious to try. Moreover, a person of ordinary skill in the art would have readily appreciated the well-known and widespread use of separate URLs for content management and viewing of content and the associated benefits and advantages of their use. Persons of ordinary skill in the art would have been motivated to combine the teachings of these references with any other network- and/or web-based communication system in order to provide separate resources relating to content management as compared to those resources needed for viewing and interacting with content, and clearly define the functionality available at each URL for the content manager.

As the attached claim charts demonstrate, the use of separate URLs for content management and viewing of content was known in the art. Specific disclosures, which are purely exemplary, from charted references Alcorn, Austin, Blackboard, Enete, Event411, Frolick, Harvey, Jameson, LiveJournal, Miller, Robinson, Tam, Underwood, Yahoo, Forsyth, Randall, Tornabene, Eck, Pelkey, Casio Cassiopeia E-125 System, Compaq iPAQ System, mMode System, Nokia 9210 System (collectively the ***Different URL*** references) are set forth in the attached charts for charted references, which include motivations to combine and disclosures of the use of separate URLs for content management and viewing of content.

A POSITA would have had a reasonable expectation of success in making any of the above such modifications. A POSITA would have understood that these references, as well as the POSITA's knowledge, disclose interrelated teachings based on routine technologies and would have been amenable to various well-understood and predictable combinations.

(10) Chat

Claim 4 of the ’039 patent and claim 17 of the ’801 patent each disclose that the mobile information channel “comprises a chat channel.” Nothing about these claim limitations add anything novel or non-obvious over the prior art. To the contrary, chat systems, and their incorporation into other interactive systems as disclosed in the Asserted Claims, were well-known, routine, conventional, and widely available long before the alleged invention(s) of the Asserted Patents.

Incorporating the functionality of a chat system into an interactive system such as those disclosed in the charted prior art references would have been obvious to a person of ordinary skill in the art at least because doing so would have involved the combination of prior art elements according to known methods to yield predictable results, the simple substitution of one known element for another to obtain predictable results, the application of a known technique to a known device ready for improvement to yield predictable results, and/or would have been obvious to try. Moreover, a person of ordinary skill in the art would have readily appreciated the well-known and widespread use of chat systems and the associated benefits and advantages of their use. Persons of ordinary skill in the art would have been motivated to combine the teachings of these chat-related references with any other network- and/or web-based communication system in order to provide additional interactivity and forms of communication between users.

As the attached claim charts demonstrate, chat systems were known in the art. Specific disclosures, which are purely exemplary, from charted references Alcorn, Austin, Blackboard, Enete, Event411, Frolick, Harvey, Jameson, LiveJournal, Miller, Robinson, Tam, Underwood, Yahoo, Forsyth, Randall, Tornabene, Eck, Pelkey, Casio Cassiopeia E-125 System, Compaq iPAQ System, mMode System, Nokia 9210 System (collectively the ***Chat*** references) are set forth in the attached charts for charted references, which include motivations to combine and disclosures of chat systems, including incorporation of chat systems into interactive, web-based systems.

A POSITA would have had a reasonable expectation of success in making any of the above such modifications. A POSITA would have understood that these references, as well as the POSITA's knowledge, disclose interrelated teachings based on routine technologies and would have been amenable to various well-understood and predictable combinations.

(11) Personalization

Claim 21 of the '336 patent discloses "personalized messaging content." Claims 2 and 29 of the '039 patent disclose "personalized content applications." Numerous claims in the '348 patent also disclose one or more "personalized content applications." ('348 patent, claims 1, 8, 13, 14, 17, 18.) Nothing about these claim limitations add anything novel or non-obvious over the prior art. To the contrary, personalized messaging content and personalized applications and their use in interactive systems, as disclosed in the Asserted Claims, were well-known, routine, conventional, and widely available long before the alleged invention(s) of the Asserted Patents.

Incorporating personalization of messaging content and content applications into an interactive system such as those disclosed in the charted prior art references would have been obvious to a person of ordinary skill in the art at least because doing so would have involved the combination of prior art elements according to known methods to yield predictable results, the simple substitution of one known element for another to obtain predictable results, the application of a known technique to a known device ready for improvement to yield predictable results, and/or would have been obvious to try. Moreover, a person of ordinary skill in the art would have readily appreciated the well-known and widespread use of personalization in interactive systems, and the associated benefits and advantages of their use. Persons of ordinary skill in the art would have been motivated to combine the teachings of these personalization-related references with any other interactive network- and/or web-based communication system in order to provide personalization for the specific user to increase engagement and usage of the system.

As the attached claim charts demonstrate, personalized messaging and content applications were known in the art. Specific disclosures, which are purely exemplary, from charted references Alcorn, Austin, Blackboard, Enete, Event411, Frolick, Harvey, Jameson, LiveJournal, Miller, Robinson, Tam, Underwood, Yahoo, Forsyth, Randall, Tornabene, Eck, Pelkey, Casio Cassiopeia E-125 System, Compaq iPAQ System, mMode System, Nokia 9210 System (collectively the ***Personalization*** references), and additional are set forth in the attached charts for charted references, which include motivations to combine and disclosures of personalized messaging and content applications.

For example, U.S. Patent Application Publication No. 2004/0198396 A1 ("Fransioli") discloses "a method and system for providing location based messaging to a mobile user with a wireless portable receiving device in which a message includes content based on the location and direction of travel of the portable device." Fransioli, ¶0006. The portable device can be a wireless or cellular handset. Fransioli, ¶¶0029, 0030, 0018 ("Advantageously, the portable receiving device may be a portable phone, wireless modem, or any other known portable device for receiving information over a wireless link."), Fig. 1 (portable device **26**).)

In one embodiment, a server determines the location of the portable device, the direction of travel of the mobile device, and establishes a message that includes content that is based on the mobile device's location and direction of travel. Fransioli, ¶¶0007, 0015, 0023. Fransioli explains that the location of the device can be determined by the device itself using known global position system (GPS) techniques, or can be determined by the wireless network based on signal strengths between the device and various transmitters in the wireless access network. Fransioli, ¶¶0027, 0030. The location-based information sent to the portable device can include, among other things, advertising information. Fransioli, ¶0018 ("For example, advertising may be delivered to the portable device based on location and direction of travel."), 0029.

A POSITA would have had a reasonable expectation of success in making any of the above such modifications. A POSITA would have understood that these references, as well as the POSITA's knowledge, disclose interrelated teachings based on routine technologies and would have been amenable to various well-understood and predictable combinations.

(12) Specifying Access Rules

Claim 8 of the '336 patent discloses that "the second web-based interface provides said one or more additional users with access to said at least one uploaded information item in accordance with accessibility rules established by the first user." Claim 9 of the '336 patent similarly discloses that "the one or more additional users comprise individuals that with the first user and by mutual consent collectively comprise a group of members that have access to at least a portion of said shared content." And each of claims 1, 13, and 17 of the '348 patent generally disclose that the "web-based shared information channel" is "controllably accessible" to specific users.

Nothing about these claim limitations add anything novel or non-obvious over the prior art. To the contrary, access controls set by one user as to what other users can view content, as disclosed in the Asserted Claims, were well-known, routine, conventional, and widely available long before the alleged invention(s) of the Asserted Patents.

Incorporating access controls into an interactive system such as those disclosed in the charted prior art references would have been obvious to a person of ordinary skill in the art at least because doing so would have involved the combination of prior art elements according to known methods to yield predictable results, the simple substitution of one known element for another to obtain predictable results, the application of a known technique to a known device ready for improvement to yield predictable results, and/or would have been obvious to try. Moreover, a person of ordinary skill in the art would have readily appreciated the well-known and widespread use of access controls and the associated benefits and advantages of their use. Persons of ordinary skill in the art would have

been motivated to combine the teachings of these access control-related references with any other network- and/or web-based communication system in order to provide additional privacy, security, and customization options for its users' communications and share content.

As the attached claim charts demonstrate, access controls for content was known in the art. Specific disclosures, which are purely exemplary, from charted references Alcorn, Austin, Blackboard, Enete, Event411, Frolick, Harvey, Jameson, LiveJournal, Miller, Robinson, Tam, Underwood, Yahoo, Forsyth, Randall, Tornabene, Eck, Pelkey, Casio Cassiopeia E-125 System, Compaq iPAQ System, mMode System, Nokia 9210 System, and additional prior art discussed below (collectively the ***Access Rules*** references) are set forth in the attached charts for charted references, which include motivations to combine and disclosures of access controls for content, and below for additional prior art:

For example, as discussed above, Van Der Meer discloses a system that allows a user to "set various levels of privacy for different portions of his diary." *Id*., 2:40-41. Van Der Meer explains as follows:

> FIG. 4(d) shows a window 450 or similar navigational element for the privacy function of button 438. Window 450 allows a user of the diary to set a privacy level at which the diary is operating of: world, friend, close friend, best friend, and owner via respective buttons 451, 452, 453, 454, and 455.

Van Der Meer at 10:36-41.

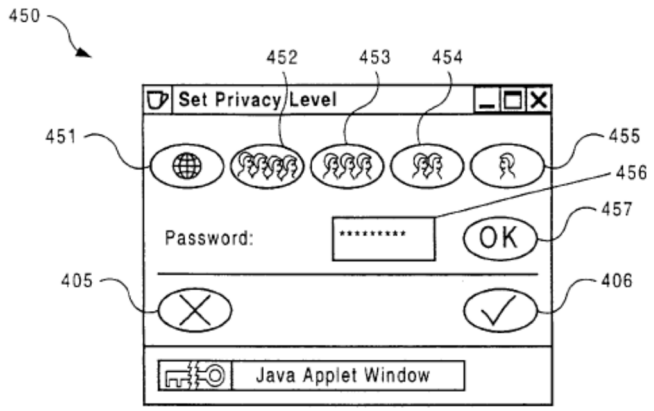

Figure 4(d)

Id. at Fig. 4(d).

A POSITA would have had a reasonable expectation of success in making any of the above such modifications. A POSITA would have understood that these references, as well as the POSITA's knowledge, disclose interrelated teachings based on routine technologies and would have been amenable to various well-understood and predictable combinations.

(13) Collaboration

Claim 8 of the '801 patent discloses "the information associated with at least one wireless networking functionality of said at least one wireless network comprises one or more collaboration actions implementable over the wireless network." Claim 15 of the '801 patent discloses "the mobile information channel comprises a collaborative workspace." Claim 3 of the '039 patent discloses "the identified application-based information channel comprises a collaborative workspace." Claim 9 of the '039 patent discloses "the information associated with said at least one wireless networking functionality of the mobile device comprises information specifying at least one collaboration action implementable over said at least one wireless network." And claim 6 of the '578 patent discloses that "the information associated with said at least one wireless networking functionality of the mobile device comprises one of . . . one or more collaboration actions implementable over the wireless

network." Nothing about these claim limitations add anything novel or non-obvious over the prior art. To the contrary, collaboration actions and collaborative workspaces were well-known, routine, conventional, and widely available long before the alleged invention(s) of the Asserted Patents.

Including collaboration actions and/or providing that a mobile information channel could be a collaborative workspace would have been obvious to a person of ordinary skill in the art, as doing so would have involved the combination of prior art elements according to known methods to yield predictable results, the simple substitution of one known element for another to obtain predictable results, the application of a known technique to a known device ready for improvement to yield predictable results, and/or would have been obvious to try. Moreover, a person of ordinary skill in the art would have readily appreciated the well-known and widespread popularity of collaborative workspaces and collaborative actions and the associated benefits and advantages of their inclusion in an interactive website. Persons of ordinary skill in the art would have been motivated to combine the teachings of these references with any other network- and/or web-based communication system in order to provide users with additional ability to interact and collaborate with each other, including in an enterprise or educational environment.

As the attached claim charts demonstrate, collaborative workspaces and collaboration actions were known in the art. Specific disclosures, which are purely exemplary, from charted references Alcorn, Austin, Blackboard, Enete, Event411, Frolick, Harvey, Jameson, LiveJournal, Miller, Robinson, Tam, Underwood, Yahoo, Forsyth, Randall, Tornabene, Eck, Pelkey, Casio Cassiopeia E-125 System, Compaq iPAQ System, mMode System, Nokia 9210 System (collectively the ***Collaboration*** references) are set forth in the attached charts, which include motivations to combine and disclosures of these claim elements.

A POSITA would have had a reasonable expectation of success in making any of the above such modifications. A POSITA would have understood that these references, as well as the POSITA's

knowledge, disclose interrelated teachings based on routine technologies and would have been amenable to various well-understood and predictable combinations.

(14) User-Activatable Control Mechanisms (e.g., hyperlinks)

Claim 11 of the '801 patent discloses that "the additional content is associated with the mobile information channel via one or more user-activatable control mechanisms," and claim 12 discloses that the "one or more user-activatable control mechanisms comprise a hyperlink." Nothing about these claim limitations add anything novel or non-obvious over the prior art. To the contrary, the use of hyperlinks for users to activate content were well-known, routine, conventional, and widely available long before the alleged invention(s) of the Asserted Patents.

Including hyperlinks in an interactive web-based system for users to access content would have been obvious to a person of ordinary skill in the art, as doing so would have involved the combination of prior art elements according to known methods to yield predictable results, the simple substitution of one known element for another to obtain predictable results, the application of a known technique to a known device ready for improvement to yield predictable results, and/or would have been obvious to try. Moreover, a person of ordinary skill in the art would have readily appreciated the well-known and widespread popularity of hyperlinks and the associated benefits and advantages of their inclusion in an interactive website. Persons of ordinary skill in the art would have been motivated to combine the teachings of these references with any other network- and/or web-based communication system in order to provide users with a familiar and easy method to access content.

As the attached claim charts demonstrate, hyperlinks were known in the art. Specific disclosures, which are purely exemplary, from charted references Alcorn, Austin, Blackboard, Enete, Event411, Frolick, Harvey, Jameson, LiveJournal, Miller, Robinson, Tam, Underwood, Yahoo, Forsyth, Randall, Tornabene, Eck, Pelkey, Casio Cassiopeia E-125 System, Compaq iPAQ System,

mMode System, Nokia 9210 System (collectively the ***Hyperlinks*** references) are set forth in the attached charts, which include motivations to combine and disclosures of these claim elements.

A POSITA would have had a reasonable expectation of success in making any of the above such modifications. A POSITA would have understood that these references, as well as the POSITA's knowledge, disclose interrelated teachings based on routine technologies and would have been amenable to various well-understood and predictable combinations.

(15) Customization

Claim 26 of the '336 patent discloses that the user is able to "title the given mobile information channel." Claim 9 of the '801 patent discloses "providing one or more content integration options to the first user and the plurality of additional users," while claim 10 further discloses that "the one or more content integration options are based in part on respective wireless networking functionalities available to the first user and the plurality of additional users." Claim 7 of the '578 patent additional discloses "providing, via the first interface, one or more content integration options to the user." Samsung refers to the "Wireless Network Functionality" section at Section IV.B.1(b)(2) above, and incorporates that section by reference here.

Nothing about these claim limitations add anything novel or non-obvious over the prior art. To the contrary, providing customization options to users, such as how to integrate content with additional information into a website, was well-known, routine, conventional, and widely available long before the alleged invention(s) of the Asserted Patents.

Including additional customization options for integrating content into a website with other information would have been obvious to a person of ordinary skill in the art at least because doing so would have involved the combination of prior art elements according to known methods to yield predictable results, the simple substitution of one known element for another to obtain predictable results, the application of a known technique to a known device ready for improvement to yield

predictable results, and/or would have been obvious to try. Moreover, a person of ordinary skill in the art would have readily appreciated the well-known and widespread use of including additional customization options for integrating content into a website with other information and the associated benefits and advantages of their use. Persons of ordinary skill in the art would have been motivated to combine the teachings of these references with any other network- and/or web-based communication system in order to provide users with additional ability to customize their website and improve its functionality and flexibility across devices and networks.

As the attached claim charts demonstrate, including additional customization options for integrating content into a website with other information was known in the art. Specific disclosures, which are purely exemplary, from charted references Alcorn, Austin, Blackboard, Enete, Event411, Frolick, Harvey, Jameson, LiveJournal, Miller, Robinson, Tam, Underwood, Yahoo, Forsyth, Randall, Tornabene, Eck, Pelkey, Casio Cassiopeia E-125 System, Compaq iPAQ System, mMode System, Nokia 9210 System (collectively the ***Customization Options*** references) are set forth in the attached charts.

A POSITA would have had a reasonable expectation of success in making any of the above such modifications. A POSITA would have understood that these references, as well as the POSITA's knowledge, disclose interrelated teachings based on routine technologies and would have been amenable to various well-understood and predictable combinations.

C. Exemplary Combinations

For at least the reasons described above, it would have been obvious to one of ordinary skill in the art to combine each prior art reference identified in Exhibits A1-A23, B1-B23, C1-C23, D1-D23, E1-E23 with any other reference or references identified in this Section long with the knowledge of one of ordinary skill in the art to arrive at the inventions claims in the Asserted Patents.

The charts below disclose combinations of reference demonstrating that the Asserted Claims of the Asserted Patents would have been obvious in light of the prior art cited. This is done by reference to the particular categories identified above. For each instance in which such a category is referenced, one or more of the references cited in that category (as identified above) may supply the claim element to which the category applies. The discussion above accompanying each category sets forth the detailed rationale and motivation for combining each category's respective references with respect to the claimed features they disclose.

Defendants identify references in groups below, based on common subject matter relevant to the Asserted Claims, for the purpose of disclosing obviousness combinations and further disclosing motivations to combine. The absence of a particular reference from a group is not an admission or suggestion that the reference does not disclose any particular claim limitations.

'336 Patent Asserted Claims	**Application of Prior Art**
Claims 1, 10, 11, 13, 14, 15, 23-25	• Obvious over the combination of each of the references in Exhibits A1-A23 with one or more references from the following combination groups:

	○ Each Standard Web and Computing Functionality reference with one or more of the following: ▪ Adding Content and/or ▪ Channel Activation and/or ▪ Standard Mobile/Wireless Functionality and/or ▪ Content Access and/or ▪ Additional Content/Messaging references ○ Each Adding Content reference with one or more of the following: ▪ Channel Activation and/or ▪ Standard Mobile/Wireless Functionality and/or ▪ Content Access and/or ▪ Additional Content/Messaging references ○ Each Channel Activation reference with one or more of the following: ▪ Standard Mobile/Wireless Functionality and/or ▪ Content Access and/or ▪ Additional Content/Messaging references ○ Each Standard Mobile/Wireless Functionality reference with one or more of the following: ▪ Content Access and/or ▪ Additional Content/Messaging references ○ Each Content Access reference with one or more Additional Content/Messaging references

‘336 Patent Asserted Claims	Application of Prior Art
Claim 6	• Obvious over the combination of each of the references in Exhibits A1-A23 with one or more references from the following combination groups: o Each Reference combination cited for Claim 1 o Each Reference combination cited for Claim 1 with one or more Different URL references
Claim 7	• Obvious over the combination of each of the references in Exhibits A1-A23 with one or more references from the following combination groups: o Each Reference combination cited for Claim 1 o Each Reference combination cited for Claim 1 with one or more Device-Captured Data references and/or Location Information references
Claim 8	• Obvious over the combination of each of the references in Exhibits A1-A23 with one or more references from the following combination groups: o Each Reference combination cited for Claim 7 o Each Reference combination cited for Claim 7 with one or more Access Rules references
Claim 9	• Obvious over the combination of each of the references in Exhibits A1-A23 with one or more references from the following combination groups: o Each Reference combination cited for Claim 1 o Each Reference combination cited for Claim 1 with one or more Access Rules references

Claim 20	• Obvious over the combination of each of the references in Exhibits A1-A23 with one or more references from the following combination groups: o Each Reference combination cited for Claim 1 o Each Reference combination cited for Claim 1 with one or more Chat references
Claim 21	• Obvious over the combination of each of the references in Exhibits A1-A23 with one or more references from the following combination groups: o Each Reference combination cited for Claim 1 o Each Reference combination cited for Claim 1 with one or more Personalized references
Claim 26	• Obvious over the combination of each of the references in Exhibits A1-A23 with one or more references from the following combination groups: o Each Reference combination cited for Claim 1 o Each Reference combination cited for Claim 1 with one or more Customization Options references

'801 Patent Asserted Claims	Application of Prior Art

Claims 1, 7, 20	• Obvious over the combination of each of the references in Exhibits B1-B23 with one or more references from the following combination groups:
	  o Each Adding Content reference with one or more of the following:
	  ▪ Channel Activation and/or
	  ▪ Content Access and/or
	  ▪ Standard Mobile/Wireless Functionality and/or
	  ▪ Additional Content/Messaging references and/or
	  ▪ Wireless Networking Functionality references
	  o Each Channel Activation reference with one or more of the following:
	  ▪ Content Access and/or
	  ▪ Standard Mobile/Wireless Functionality and/or
	  ▪ Additional Content/Messaging and/or
	  ▪ Wireless Networking Functionality references
	  o Each Content Access reference with one or more of the following:
	  ▪ Standard Mobile/Wireless Functionality and/or
	  ▪ Additional Content/Messaging and/or
	  ▪ Wireless Networking Functionality references
	  o Each Standard Mobile/Wireless Functionality reference with one or more of the following:
	  ▪ Additional Content/Messaging and/or

	▪ Wireless Networking Functionality references o Each Additional Content/Messaging reference with one or more Wireless Networking Functionality references

’801 Patent Asserted Claims	Application of Prior Art
Claims 8, 15	• Obvious over the combination of each of the references in Exhibits B1-B23 with one or more references from the following combination groups: o Each Reference combination cited for Claim 1 o Each Reference combination cited for Claim 1 with one or more Collaboration references
Claims 9, 10	• Obvious over the combination of each of the references in Exhibits B1-B23 with one or more references from the following combination groups: o Each Reference combination cited for Claim 1 o Each Reference combination cited for Claim 1 with one or more Customization Options references
Claims 11, 12	• Obvious over the combination of each of the references in Exhibits B1-B23 with one or more references from the following combination groups: o Each Reference combination cited for Claim 1 o Each Reference combination cited for Claim 1 with one or more Hyperlinks references
Claim 17	• Obvious over the combination of each of the references in Exhibits B1-B23 with one or more references from the following combination groups: o Each Reference combination cited for Claim 1 o Each Reference combination cited for Claim 1 with one or more Chat references

Claims 22-25	• Obvious over the combination of each of the references in Exhibits B1-B23 with one or more references from the following combination groups:
	  o Each Reference combination cited for Claim 1
	  o Each Reference combination cited for Claim 1 with one or more Standard Web and Computing Functionality references

’039 Patent Asserted Claims	Application of Prior Art
Claims 1, 3, 8, 9, 14, 15, 17-19, 22-25, 28, 30	• Obvious over the combination of each of the references in Exhibits C1-C23 with one or more references from the following combination groups: o Each Standard Web and Computing Functionality reference with one or more of the following: ▪ Standard Mobile/Wireless Functionality and/or ▪ Adding Content and/or ▪ Additional Content/Messaging references and/or ▪ Device-Captured Data and/or ▪ Wireless Networking Functionality references o Each Standard Mobile/Wireless Functionality reference with one or more of the following: ▪ Adding Content and/or ▪ Additional Content/Messaging and/or ▪ Device-Captured Data and/or ▪ Wireless Networking Functionality references o Each Adding Content reference with one or more of the following: ▪ Additional Content/Messaging and/or ▪ Device-Captured Data and/or ▪ Wireless Networking Functionality references o Each Additional Content/Messaging reference with one or more Device-Captured Data and/or Wireless Networking Functionality references

	○ Each Device-Captured Data references with one or more Wireless Networking Functionality references
Claims 2, 29	• Obvious over the combination of each of the references in Exhibits C1-C23 with one or more references from the following combination groups: ○ Each Reference combination cited for Claim 1 ○ Each Reference combination cited for Claim 1 with one or more Personalized references
Claims 3, 9	• Obvious over the combination of each of the references in Exhibits C1-C23 with one or more references from the following combination groups: ○ Each Reference combination cited for Claim 1 ○ Each Reference combination cited for Claim 1 with one or more Collaboration references
Claim 4	• Obvious over the combination of each of the references in Exhibits C1-C23 with one or more references from the following combination groups: ○ Each Reference combination cited for Claim 1 ○ Each Reference combination cited for Claim 1 with one or more Chat references
Claim 13	• Obvious over the combination of each of the references in Exhibits C1-C23 with one or more references from the following combination groups: ○ Each Reference combination cited for Claim 1 ○ Each Reference combination cited for Claim 1 with one or more Location Information references

’578 Patent Asserted Claims	Application of Prior Art
Claims 1, 12, 15, 21	• Obvious over the combination of each of the references in Exhibits D1-D23 with one or more references from the following combination groups: o Each Standard Mobile/Wireless Functionality reference with one or more of the following: ▪ Adding Content and/or ▪ Device-Captured Data and/or ▪ Wireless Networking Functionality and/or ▪ Content Access references o Each Adding Content reference with one or more of the following: ▪ Device-Captured Data and/or ▪ Wireless Networking Functionality and/or ▪ Content Access references o Each Device-Captured Data reference with one or more of the following: ▪ Wireless Networking Functionality and/or ▪ Content Access references o Each Wireless Networking Functionality reference with one or more Content Access references.
Claim 7	• Obvious over the combination of each of the references in Exhibits D1-D23 with one or more references from the following combination groups: o Each Reference combination cited for Claim 1 o Each Reference combination cited for Claim 1 with one or more Customization Options references

Claims 8-11, 16	• Obvious over the combination of each of the references in Exhibits D1-D23 with one or more references from the following combination groups:
	  o Each Reference combination cited for Claim 1
	  o Each Reference combination cited for Claim 1 with one or more Standard Web and Computing Functionality references

’348 Patent Asserted Claims	Application of Prior Art

Claims 1, 2, 6-9, 12-14, 17, 18	• Obvious over the combination of each of the references in Exhibits E1-E23 with one or more references from the following combination groups:
	  o Each Standard Web and Computing Functionality reference with one or more of the following:
	  ▪ Standard Mobile/Wireless Functionality and/or
	  ▪ Adding Content and/or
	  ▪ Additional Content/Messaging and/or
	  ▪ Device-Captured Data and/or
	  ▪ Content Access and/or
	  ▪ Personalized references
	  o Each Standard Mobile/Wireless Functionality reference with one or more of the following:
	  ▪ Adding Content and/or
	  ▪ Additional Content/Messaging and/or
	  ▪ Device-Captured Data and/or
	  ▪ Content Access and/or
	  ▪ Personalized references
	  o Each Adding Content reference with one or more of the following:
	  ▪ Additional Content/Messaging and/or
	  ▪ Device-Captured Data and/or
	  ▪ Content Access and/or
	  ▪ Personalized references
	  o Each Additional Content/Messaging reference with one or more of the following:
	  ▪ Device-Captured Data and/or

	▪ Content Access and/or ▪ Personalized references o Each Device-Captured Data reference with one or more of the following: ▪ Content Access and/or ▪ Personalized references o Each Content Access reference with one or more Personalized references.

As mentioned above, Defendants have not yet completed their search or discovery concerning additional prior art. Moreover, the exemplary combinations are provided based on Defendants' current understanding of the Asserted Claims and Plaintiffs' apparent view of the scope of those claims as shown, for example, in Plaintiff's Infringement Contentions. Further, a *Markman* Order has not yet been issued in this case. As such, Defendants' inclusion of exemplary combinations does not preclude them from identifying other invalidating combinations as

appropriate, and Defendants reserve the right to identify additional specific combinations as well as to detail and explain such combinations.

V. P.R. 3-3(D) – INVALIDITY UNDER 35 U.S.C. § 112

A. Lack of Written Description and/or Enablement Under 35 U.S.C. § 112 ¶ 1

One or more of the Asserted Claims, as detailed below, are invalid under pre-AIA 35 U.S.C. § 112 ¶ 1 for lack of written description and/or enablement. For example, the patents do not provide sufficient written description support to establish that the alleged inventor possessed the alleged inventions recited in the Asserted Claims. *Ariad Pharms., Inc. v. Eli Lilly & Co.*, 598 F.3d 1336, 1351 (Fed. Cir. 2010). In other words, the applicants did not describe their purported inventions in a manner that "reasonably conveys to those skilled in the art that the inventor had possession of the claim subject matter as of the filing date." *Id.* One of the ordinary skill in the art would not have understood that the inventors were in possession of the full scope of the claimed apparatuses and methods, at least as Plaintiff appears to be asserting the claims.

The specifications of the Asserted Patents also do not enable one of ordinary skill in the art to make and/or use certain recited elements of the Asserted Claims, as detailed below, without undue experimentation, at least as Plaintiff appears to be asserting those limitations. For example, the Asserted Claims fail to sufficiently enable the limitations listed below. *In re Wands*, 858 F.2d 731, 737 (Fed. Cir. 1998); *see Wyeth & Cordis Corp. v. Abbott Laby's*, 720 F.3d 1380, 1384 (Fed. Cir. 2013).

As noted in Defendants' Preliminary Ineligibility Contentions (Exs. A24, B24, C24, D24, E24, the "Preliminary Ineligibility Contentions"), certain identified claims of the Asserted Patents are patent ineligible under 35 U.S.C. § 101. In particular, certain hardware and software components identified by Samsung in its Preliminary Ineligibility Contentions were well

understood, routine, and conventional technology in the relevant time period. This is evident, in part, because there is no technical disclosure or explanation in the specification about how the claimed invention purportedly implements the particular component or element. Rather, the patentee evidently relied on that component being well understood, routine, and conventional in the relevant industry at the relevant time period. *See* M.P.E.P 2106.05(d)(I)(2) (conventionality under Section 101 is found where "an element is so well-known that it need not be described in detail in the patent specification"). Because the Court has yet to issue a claim construction in this case, fact and expert discovery is ongoing, and to the extent Plaintiff may contend that, in an attempt to avoid subject matter ineligibility under 35 U.S.C. § 101, one or more components of the identified claim elements were *not* well understood, routine, and/or conventional technology as of the relevant time period, the Asserted Patents fail the written description requirements of 35 U.S.C. § 112, and Samsung reserves the right to supplement or modify these contentions in accordance with the agreed patent-disclosure procedures and the Docket Control Order in this case.

In addition, the Asserted Claims of the Asserted Patents all claim priority to the same provisional patent application and non-provisional patent application: U.S. Provisional Patent Application No. 60/389,430 and U.S. Patent Application No. 10/464,526, respectively. Throughout prosecution of the patent family to which the Asserted Patents belong, additional claim elements were added without any specific support in the specification. To the extent Plaintiff attempts to broaden the scope of the Asserted Claims beyond that which was originally disclosed, this would render each Asserted Claim with such elements invalid under 35 U.S.C. § 112 ¶ 1.

In addition, during prosecution of the Asserted Patents, additional language was added to the Abstract and Summary of the Invention sections, which is not located in either U.S. Provisional Patent Application No. 60/389,430 or U.S. Patent Application No. 10/464,526. To the extent

Plaintiff relies on such added language as providing the required support for the Asserted Claims (or for any particular claim interpretation of the Asserted Claims beyond that which was originally disclosed), these Asserted Claims would lose their ability to claim priority to either of U.S. Provisional Patent Application No. 60/389,430 or U.S. Patent Application No. 10/464,526.

1. The ’336 Patent

To the extent the following limitations are definite (under pre-AIA 35 U.S.C. § 112 ¶ 2)), the ’336 patent fails to sufficiently describe and/or enable them as required by pre-AIA 35 U.S.C. § 112 ¶ 1.

Term	**Claims**
“user to activate”	1, 11, 15
“first web-based interface”	1, 6, 8, 11, 15, 26
“second web-based interface”	1, 6, 8, 9, 11, 15, 26
“a first uniform resource locator and the second web-based interface is identified by a second uniform resource locator different than the first uniform resource locator”	6
“wherein the shared content is obtained from a device-captured data source comprising a source of at least one of device-captured video data, device-captured image data, device-captured audio data, and device-captured location coordinated.”	7
“information item”	8
“personalized messaging content”	21

2. The ’801 Patent

To the extent the following limitations are definite (under pre-AIA 35 U.S.C. § 112 ¶ 2), the ’801 patent fails to sufficiently describe and/or enable them as required by pre-AIA 35 U.S.C. § 112 ¶ 1.

Term	Claims
“mobile device application”	20
“interface” / “portion of an interface”	1, 23, 25
“insert[ing] at least a portion of the additional content”	1, 23, 25
“information associated with at least one wireless networking functionality of said at least one wireless network”	1, 7, 8, 23, 25
“wherein the information associated with at least one wireless networking functionality of said at least one wireless network comprises one or more messaging actions implementable over the wireless network.”	7
“wherein the information associated with at least one wireless networking functionality of said at least one wireless network comprises one or more collaboration actions implementable over the wireless network.”	8
“content integration options”	9, 10
“user-activatable control mechanisms”	11, 12
“collaborative workspace”	15
“mobile device application”	20

3. The ’039 Patent

To the extent the following limitations are definite (under pre-AIA 35 U.S.C. § 112 ¶ 2), the ’039 patent fails to sufficiently describe and/or enable them as required by pre-AIA 35 U.S.C. § 112 ¶ 1.

Term	Claims
"application-based information channel"	1-4, 18, 19, 23, 24, 28-30
"capturing content" / "capture content" / "captured content"	1, 13, 18, 24, 25
"determined information"	1, 18
"personalized content application"	2, 29
"information associated with at least one wireless networking functionality of said at least one wireless network"	1, 8, 9, 18, 19, 23
"wherein the information associated with said at least one wireless networking functionality of the mobile device comprises information specifying at least one messaging action implementable over said at least one wireless network."	8
"wherein the information associated with said at least one wireless networking functionality of the mobile device comprises information specifying at least one collaboration action implementable over said at least one wireless network."	9
"collaborative workspace"	3
"wherein the captured content is obtained from a device-captured data source of the mobile device, the device-captured data source comprising a source of at least one of device-captured video data, device-captured image data, device-captured audio data and device-captured location coordinates."	13

4. The '578 Patent

To the extent the following limitations are definite (under pre-AIA 35 U.S.C. § 112 ¶ 2), the '578 patent fails to sufficiently describe and/or enable them as required by pre-AIA 35 U.S.C. § 112 ¶ 1.

Term	Claims
"application-based information channel"	1, 9, 12, 21
"media data captured by the mobile device"	1, 9, 12, 21
"first interface"	1, 7, 9, 12, 21
"second interface"	1, 9, 12, 21
"device-captured video data, device captured audio data and device-captured image data."	15

5. The '348 Patent

To the extent the following limitations are definite (under pre-AIA 35 U.S.C. § 112 ¶ 2), the '348 patent fails to sufficiently describe and/or enable them as required by pre-AIA 35 U.S.C. § 112 ¶ 1.

Term	Claims
"web-based shared information channel"	1, 8, 10, 13, 14, 17, 18
"device-captured data"	1, 2, 8, 13, 14, 17,18
"one of the first and second mobile devices comprises one of a mobile telephone, a tablet computer, a GPS-based navigational device, a watch and a portable game player"	6
"personalized content application"	1, 8, 10, 13-15
"at least one of the first device-captured data and the second device-captured data comprises image data"	2

B. Indefiniteness Under 35 U.S.C. § 112 ¶ 2

One or more of the Asserted Claims, as detailed below, are invalid under pre-AIA 35 U.S.C. § 112 ¶ 2 for indefiniteness. Under § 112 ¶ 2, "a patent is invalid for indefiniteness if its claims, read in light of the specification delineating the patent, and the prosecution history, fail to

inform, with reasonable certainty, those skilled in the art about the scope of the invention." *Nautilus, Inc. v. Biosig Instruments, Inc*., 572 U.S. 898, 901 (2014). "[T]he second paragraph of § 112 contains two requirements: first, the claim must set forth what the applicant regards as his invention, and second, it must do so with sufficient particularity and distinctness, i.e., the claim must be sufficiently definite." *Allen Eng'g Corp. v. Bartell Indus., Inc.*, 299 F.3d 1336, 1348 (Fed. Cir. 2002) (quotations and alterations omitted). "Where it would be apparent to one of skill in the art, based on the specification, that the invention set forth in a claim is not what the patentee regarded as his invention," the claim is "invalid under § 112, paragraph 2." *Id.* at 1349.

The Asserted Claims are invalid as indefinite because it would be apparent to one of skill in the art, based on the specification, that the invention set forth in these claims are not what the patentee regarded as his invention, at least as the claims are being asserted by Plaintiff. The Asserted Claims are also invalid under pre-AIA § 112 ¶ 2 at least because they contain elements that differ from and/or conflict with the written description of the invention, at least as the claim elements are being asserted by Plaintiff, or because they omit elements that one of skill in the art would understand as part of the Asserted Patents' invention based on the specification and prosecution history.

For example, the specification and prosecution history of the Asserted Patents would not have informed, with reasonable certainty, those skilled in the art about the scope of the following claim limitations.

1. The '336 Patent

The following limitations recited in the '336 patent are indefinite in whole, in part or in combination.

Term	Claims
"user to activate"	1, 11, 15
"first web-based interface"	1, 6, 8, 11, 15, 26
"second web-based interface"	1, 6, 8, 9, 11, 15, 26
"a first uniform resource locator and the second web-based interface is identified by a second uniform resource locator different than the first uniform resource locator"	6
"wherein the shared content is obtained from a device-captured data source comprising a source of at least one of device-captured video data, device-captured image data, device-captured audio data, and device-captured location coordinated."	7
"information item"	8
"personalized messaging content"	21

2. The '801 Patent

The following limitations recited in the '801 Patent are indefinite in whole, in part or in combination.

Term	Claims
"mobile device application"	20
"interface" / "portion of an interface"	1, 23, 25
"insert[ing] at least a portion of the additional content"	1, 23, 25
"information associated with at least one wireless networking functionality of said at least one wireless network"	1, 7, 8, 23, 25
"wherein the information associated with at least one wireless networking functionality of said at least one	7

wireless network comprises one or more messaging actions implementable over the wireless network."	
"wherein the information associated with at least one wireless networking functionality of said at least one wireless network comprises one or more collaboration actions implementable over the wireless network."	8
"content integration options"	9, 10
"user-activatable control mechanisms"	11, 12
"collaborative workspace"	15
"mobile device application"	20

3. The '039 Patent

The following limitations recited in the '039 patent are indefinite in whole, in part or in combination.

Term	Claims
"application-based information channel"	1-4, 18, 19, 23, 24, 28-30
"capturing content" / "capture content" / "captured content"	1, 13, 18, 24, 25
"determined information"	1, 18
"personalized content application"	2, 29
"information associated with at least one wireless networking functionality of said at least one wireless network"	1, 8, 9, 18, 19, 23
"wherein the information associated with said at least one wireless networking functionality of the mobile device comprises information specifying at least one messaging action implementable over said at least one wireless network."	8

"wherein the information associated with said at least one wireless networking functionality of the mobile device comprises information specifying at least one collaboration action implementable over said at least one wireless network."	9
"collaborative workspace"	3
"wherein the captured content is obtained from a device-captured data source of the mobile device, the device-captured data source comprising a source of at least one of device-captured video data, device-captured image data, device-captured audio data and device-captured location coordinates."	13

4. The '578 Patent

The following limitations recited in the '578 patent are indefinite in whole, in part or in combination.

Term	Claims
"application-based information channel"	1, 9, 12, 21
"media data captured by the mobile device"	1, 9, 12, 21
"first interface"	1, 7, 9, 12, 21
"second interface"	1, 9, 12, 21
"device-captured video data, device captured audio data and device-captured image data."	15

5. The '348 Patent

The following limitations recited in the '348 patent are indefinite in whole, in part or in combination.

Term	Claims
"web-based shared information channel"	1, 8, 10, 13, 14, 17, 18
"device-captured data"	1, 2, 8, 13, 14, 17,18
"one of the first and second mobile devices comprises one of a mobile telephone, a tablet computer, a GPS-based navigational device, a watch and a portable game player"	6
"personalized content application"	1, 8, 10, 13-15
"at least one of the first device-captured data and the second device-captured data comprises image data"	2

VI. OTHER ISSUES

A. Priority Dates

The Local Patent Rules do not require Defendants to identify or opine on the priority date relevant to the Asserted Claims. Further, discovery in this case is ongoing, and Defendants' investigation, collection of information, discovery, and analysis relating to this issue has not completed. Accordingly, Defendants reserve all rights to challenge any priority date(s) to which Plaintiff contends the Asserted Claims may be entitled, including all priority date(s) identified by Plaintiff in this or related proceedings, including any litigations involving the same or any related patents, or related IPRs.

1. Priority Date of U.S. Patent No. 8,793,336

Plaintiff is not entitled to rely on the June 18, 2002 priority date of provision application No. 60/389,430 ("the provisional"). The provisional does not support the claimed inventions as a whole as they do not disclose or support the claimed combination of elements in each of the Asserted Claims of the '336 patent. Moreover, the provisional fails to disclose at least the following limitations of the Asserted Claims of the '336 patent: "generating a second web-based

interface different than the first web-based interface, wherein the second web-based interface provides each of the one or more additional users access to at least a portion of the shared content via the given mobile information channel to thereby facilitate interaction between the first user and the one or more additional users." Therefore, the Asserted Claims of the '336 Patent cannot claim priority to the provisional.

Instead, the earliest date, if any, to which Plaintiff may be entitled to claim priority is June 18, 2003, the date that the application resulting in U.S. 7,599,983 was filed, to which the '336 patent claims priority. Defendants reserve all rights to amend and/or supplement their Invalidity Contentions upon a finding that any of the Asserted Claims of the '336 patent is not entitled to the priority date asserted by Plaintiff. In particular, Defendants reserve all rights to amend and/or supplement their disclosures with further prior art to the extent that the Court determines a priority date subsequent to any of the dates asserted by Plaintiff.

2. Priority Date of U.S. Patent No. 8,825,801

Plaintiff is not entitled to rely on the June 18, 2002 priority date of the provisional. The provisional does not support the claimed inventions as a whole as they do not disclose or support the claimed combination of elements in each of the Asserted Claims of the '801 patent. Moreover, the provisional fails to disclose at least the following limitations of the Asserted Claims of the '801 patent: "integrating into the mobile information channel information associated with at least one wireless networking functionality of said at least one wireless network." Therefore, the Asserted Claims of the '801 patent cannot claim priority to the provisional.

Instead, the earliest date, if any, to which Plaintiff may be entitled to claim priority is June 18, 2003, the date that the application resulting in U.S. 7,599,983 was filed, to which the '801 patent claims priority. Defendants reserve all rights to amend and/or supplement their Invalidity Contentions upon a finding that any of the Asserted Claims of the '801 patent is not entitled to the

priority date asserted by Plaintiff. In particular, Defendants reserve all rights to amend and/or supplement their disclosures with further prior art to the extent that the Court determines a priority date subsequent to any of the dates asserted by Plaintiff.

3. Priority Date of U.S. Patent No. 9,032,039

Plaintiff is not entitled to rely on the June 18, 2002 priority date of the provisional. The provisional does not support the claimed inventions as a whole as they do not disclose or support the claimed combination of elements in each of the Asserted Claims of the ’039 patent. Moreover, the provisional fails to disclose at least the following limitations of the Asserted Claims of the ’039 patent: “capturing content at a mobile device”; “identifying a previously established application-based information channel into which the captured content is to be inserted”; and “providing the captured content from the mobile device to at least one server for insertion in association with the determined information into the identified application-based information channel.” Therefore, the Asserted Claims of the ’039 patent cannot claim priority to the provisional.

Instead, the earliest date, if any, to which Plaintiff may be entitled to claim priority is June 18, 2003, the date that the application resulting in U.S. 7,599,983 was filed, to which ’039 patent claims priority. Defendants reserve all rights to amend and/or supplement their Invalidity Contentions upon a finding that any of the Asserted Claims of the ’039 patent is not entitled to the priority date asserted by Plaintiff. In particular, Defendants reserve all rights to amend and/or supplement their disclosures with further prior art to the extent that the Court determines a priority date subsequent to any of the dates asserted by Plaintiff.

4. Priority Date of U.S. Patent No. 9,619,578

Plaintiff is not entitled to rely on the June 18, 2002, priority date of the provisional. The provisional does not support the claimed inventions as a whole as they do not disclose or support the claimed combination of elements in each of the Asserted Claims of the ’578 patent. Moreover,

the provisional fails to disclose at least the following limitations of the Asserted Claims of the ’578 patent: “providing a first interface permitting designation of at least one content item, via a mobile device, for insertion into an application-based information channel.” Therefore, the Asserted Claims of the ’578 patent cannot claim priority to the provisional.

Instead, the earliest date, if any, to which Plaintiff may be entitled to claim priority is June 18, 2003, the date that the application resulting in U.S. 7,599,983 was filed, to which the ’578 patent claims priority. Defendants reserve all rights to amend and/or supplement their Invalidity Contentions upon a finding that any of the Asserted Claims of the ’578 patent is not entitled to the priority date asserted by Plaintiff. In particular, Defendants reserve all rights to amend and/or supplement their disclosures with further prior art to the extent that the Court determines a priority date subsequent to any of the dates asserted by Plaintiff.

5. Priority Date of U.S. Patent No. 9,922,348

Plaintiff is not entitled to rely on the June 18, 2002, priority date of provision application No. 60/389,430 (“the provisional”). The provisional does not support the claimed inventions as a whole as they do not disclose or support the claimed combination of elements in each of the Asserted Claims of the ’348 patent. Moreover, the provisional fails to disclose at least the following limitations of the Asserted Claims of the ’348 patent: “integrate the first and second device-captured data into a web-based shared information channel controllably accessible to first and second users of the respective first and second mobile devices via respective personalized content applications of the first and second mobile devices.” Therefore, the Asserted Claims of the ’348 patent cannot claim priority to the provisional.

Instead, the earliest date, if any, to which Plaintiff may be entitled to claim priority is June 18, 2003, the date that the application resulting in U.S. 7,599,983 was filed, to which the ’348 patent claims priority. Defendants reserve all rights to amend and/or supplement their Invalidity

Contentions upon a finding that any of the Asserted Claims of the ’348 patent is not entitled to the priority date asserted by Plaintiff. In particular, Defendants reserve all rights to amend and/or supplement their disclosures with further prior art to the extent that the Court determines a priority date subsequent to any of the dates asserted by Plaintiff.

VII. SUBJECT MATTER ELIGIBILITY

Pursuant to the Court’s Standing Order Regarding Subject Matter Eligibility Contentions Applicable to All Patent Infringement Cases Assigned to Chief District Judge Rodney Gilstrap (“Order Regarding Eligibility”), Defendants provide the following Eligibility Contentions. As described below, in Exhibits A24, B24, C24, D24, and E24, which are hereby incorporated by reference as if fully set forth herein, Defendants contend that the Asserted Claims of the Asserted Patents are drawn to subject matter that is not patentable under 35 U.S.C. § 101. Pursuant to Section (a)(1) of the Order Regarding Eligibility, Exhibits A24, B24, C24, D24, and E24 contain a chart for each Asserted Patent identifying each exception to eligibility to which each Challenged Claim is directed and the factual and legal basis therefore. Pursuant to Section (a)(2)(A) of the Order Regarding Eligibility the charts of Exhibits A24, B24, C24, D24, and E24, read in conjunction with the discussion herein and in Exhibit A1-A23, B1-B23, C1-C23, D1-D23, E1-E23 and together with the material described, referenced, or cited in the charts, further provide a description of the industry, at the relevant time, in which the Asserted Claims are alleged to be well understood, routine, and conventional, and the factual and legal basis therefore. Further, pursuant to Sections (a)(2)(B) and (a)(3) of the Order Regarding Eligibility, the charts of Exhibits A24, B24, C24, D24, and E24, read in conjunction with the discussion herein, and together with the material described, referenced, or cited in the charts, further provides: (i) a description of how each element of each Asserted Claim, both individually and in combination with the other elements of that claim, was well understood, routine, and/or conventional in the relevant industry at the

relevant time and (ii) an identification of the factual or legal basis for how the Asserted Claims are otherwise ineligible for patent protection.

Additionally, pursuant to Section (b) of the Order Regarding Eligibility, Defendants are concurrently producing or making available for inspection and copying the materials on which Defendants presently seek to rely for subject-matter eligibility purposes. These prior art references and other materials are cited herein or in Exhibits A1-A23, B1-B23, C1-C23, D1-D23, E1-E23. For the avoidance of doubt, Defendants may rely on the materials identified in Section III, above. Without concession that expert testimony is necessary to resolve the subject matter eligibility of the Asserted Claims, Defendants reserve the right to further rely on expert testimony to be disclosed in accordance with the Docket Control Order. Defendants' search for prior art references, additional documentation, and/or corroborating evidence concerning prior art systems and devices is ongoing. Accordingly, Defendants reserve the right to supplement their production as Defendants obtain additional prior art references, documentation, and/or corroborating evidence concerning subject matter eligibility during the course of discovery.

Defendants reserve the right to supplement their document production pursuant to Section (b) of the Order Regarding Eligibility as authorized by the Patent Local Rules, the Order Regarding Eligibility, or any other order of the Court.

VIII. P.R. 3-4 – DOCUMENT PRODUCTION ACCOMPANYING INVALIDITY CONTENTIONS

Pursuant to P.R. 3-4(a), Defendants have produced and/or made available for inspection documents and other materials sufficient to show the operation of any aspects or elements of the Accused Products identified by Plaintiff in its P.R. 3-1(c) charts.

Additionally, and pursuant to P.R. 3-4(b), Defendants are concurrently producing a copy of each item of prior art identified herein. These prior art references and corroborating evidence

are cited in attached invalidity claim charts in Exhibits A1-A23, B1-B23, C1-C23, D1-D23, E1-E23. Defendants will also make available for inspection any prior art systems or devices upon request to the extent Defendants acquire such systems or devices. References that were cited during prosecution of the Asserted Patents may not be contained in Defendants' production as they are not required to be under the Local Patent Rules. Defendants' search for prior art references, additional documentation, and/or corroborating evidence concerning prior art systems and devices is ongoing. Accordingly, Defendants reserve the right to supplement their production as Defendants obtain additional prior art references, documentation, and/or corroborating evidence concerning invalidity during the course of discovery. Defendants reserve the right to supplement their P.R. 3-4 document production pursuant to the Patent Local Rules and the orders of the Court.

Date: January 31, 2025

/s/ Douglas J. Kline
Melissa R. Smith
TX Bar No. 24001351
melissa@gillamsmithlaw.com
GILLAM & SMITH, LLP
303 South Washington Ave.
Marshall, Texas 75670
Telephone: (903) 934-8450
Facsimile: (903) 934-9257

Douglas J. Kline
Srikanth K. Reddy
Harrison Gunn
GOODWIN PROCTER LLP
100 Northern Avenue
Boston, MA 02210
Tel.: (617) 570-1000
Fax: (617) 523-1231
DKline@goodwinlaw.com
SReddy@goodwinlaw.com
HGunn@goodwinlaw.com

Darryl M. Woo
GOODWIN PROCTER LLP
Three Embarcadero Center
San Francisco, CA 94111
Tel.: (415) 733-6000
Fax: (415) 677-9041
DWoo@goodwinlaw.com

Patrick J. McCarthy
GOODWIN PROCTER LLP
1900 N Street, N.W.
Washington, D.C. 20036
Tel.: (202) 346-4000
Fax: (202) 346-4444
PMcCarthy@goodwinlaw.com

Naomi L. Birbach
Christine Potkay
GOODWIN PROCTER LLP
The New York Times Building
620 Eighth Avenue
New York, NY 10018
Tel.: (212) 813-8800
Fax: (212) 355-3333
NBirbach@goodwinlaw.com
CPotkay@goodwinlaw.com

Attorneys for Defendants Samsung Electronics Co. Ltd. and Samsung Electronics America, Inc.

CERTIFICATE OF SERVICE

The undersigned hereby certifies that on January 31, 2025 a true and correct copy of the foregoing document was served on all counsel of record via email.

/s/ Douglas J. Kline
Douglas J. Kline