UNITED STATES PATENT AND TRADEMARK OFFICE

BEFORE THE PATENT TRIAL AND APPEAL BOARD

SAMSUNG ELECTRONICS CO. LTD. and SAMSUNG ELECTRONICS AMERICA, INC.,
Petitioners,

v.

MOBILE DATA TECHNOLOGIES LLC,
Patent Owner

IPR2025-00538

U.S. Patent 8,825,801

DECLARATION OF HENRY HOUH, PH.D. IN SUPPORT OF PETITION FOR *INTER PARTES* REVIEW OF U.S. PATENT 8,825,801

Mail Stop PATENT BOARD
Patent Trial and Appeal Board
U.S. Patent & Trademark Office
P.O. Box 1450
Alexandria, VA 22313-1450

TABLE OF CONTENTS

Page

I. QUALIFICATIONS 3

II. UNDERSTANDING OF RELEVANT LEGAL PRINCIPLES 6

III. '801 PATENT 9

- **A.** Overview of the '801 Patent 9
- **B.** Level of Ordinary Skill in the Art 13
- **C.** Prosecution History 14
- **D.** Claim Construction 15
  - 1. "Mobile Device" 16
  - 2. "Mobile Information Channel" 17
  - 3. "Wireless Network" 18

IV. GROUND 1: THE COMBINATION OF RANDALL AND FORSYTH RENDERS CLAIMS 1, 7-12, AND 14-25 OBVIOUS 19

- **A.** Overview of the Combination 19
  - 1. Randall 21
    - a) Client Devices: Wireless Information Devices 24
    - b) Servers 25
    - c) Communication means 26
    - d) Database 33
  - 2. Forsyth 37
  - 3. Motivation to Combine Randall and Forsyth 39
- **B.** Independent Claims 43
  - 1. Claim 1 43
    - a) Preamble [1P]: "method" 43
    - b) Limitations [1A]-[1C] 43
    - c) Limitations [1D]-[1E] 53
    - d) "Integrating" Limitation [1F] 66
  - 2. Independent Claim 22 79

3. Independent Claim 23 81
a) Preamble [23P]: "apparatus" 81
b) Server Architecture Limitation [23A] 83
c) Processing Limitations [23B]-[23G] 88
4. Independent Claim 25 90
a) Preamble [25P] and "Plurality of Servers" [25A] 90
b) Processing Limitations [25B]-[25G] 92
C. Dependent Claims 94
1. Claims 7-8—"Wireless Networking Functionality" 94
2. Claims 9-10—"Content Integration" 94
3. Claims 11-12—"User-Activatable Control Mechanisms" 97
4. Claim 14—"Additional Content" 99
5. Claim 15—"Collaborative Workspace" 104
6. Claim 16 106
7. Claim 17—Chat Channel 107
8. Claims 18-19—"entertainment-related entity" 109
9. Claims 20-21—"Mobile Device Application" 110
10. Claim 24—Server 112
V. GROUND 2: THE COMBINATION OF PELKEY AND ECK RENDERS CLAIMS 1, 7-12, 15, 17, 20 AND 22-25 OBVIOUS 114
A. Overview of the Combination 114
1. Pelkey 115
2. Eck 117
3. Motivation to Combine Pelkey and Eck 119
B. Independent Claims 1, 22-23, 25 122
1. Claim 1 122
a) Preamble [1P]: "method" 122
b) Limitations [1A]-[1C] 122

c) Limitations [1D]-[1E] 135
d) "Integrating" Limitation [1F] 143
2. Independent Claim 22 149
3. Independent Claim 23 151
a) Preamble [23P]: "apparatus" 151
b) Server Architecture Limitation [23A] 151
c) Processing Limitations [23B]-[23G] 154
4. Independent Claim 25 154
a) Preamble [25P] and "Plurality of Servers" [25A] 154
b) Processing Limitations [25B]-[25G] 155
C. Dependent Claims 155
1. Claims 7-8 155
2. Claims 9-10—"Content Integration" 156
3. Claims 11-12—"User-Activatable Control Mechanisms" 157
4. Claim 15—"Collaborative Workspace" 159
5. Claim 17—Chat Channel 160
6. Claims 20—"Mobile Device Application" 160
7. Claim 24—Server 162
VI. CONCLUSION 164

I, Henry Houh, Ph.D., declare as follows:

1. I have been retained by Goodwin Procter LLP on behalf of Petitioners Samsung Electronics Co. Ltd. and Samsung Electronics America, Inc. ("Petitioners") to provide this Declaration concerning technical subject matter relevant to the petition for *Inter Partes* Review ("Petition") of U.S. Patent 8,825,801 ("the '801 patent").

2. I am over 18 years of age. I have personal knowledge of the facts stated in this Declaration and could testify competently to them if asked to do so.

3. I have been asked to provide my technical opinions regarding how a person of ordinary skill in the art would have understood the claims of the '801 patent at the time of the alleged invention, which I have been asked to assume is the 2002 timeframe. For purposes of whether the teachings of the prior art render the claims of the '801 patent obvious, I have been asked to assume the date of June 18, 2002. I have also been asked to provide my technical opinions on how concepts in the '801 patent specification relate to claim limitations of the '801 patent.

4. In reaching the opinions provided herein, I have considered the '801 patent, its prosecution history, and the references cited in the Appendix. I have also drawn on my own education, training, research, knowledge, and personal and professional experience.

5. In general, I have been asked to cite to the specification of a patent or patent publication using the following formats: (Patent No., Col:Line Number(s)) or (Patent No., Paragraph Number(s)). For example, the citation (EX-1001, 1:1-10) points to the ’801 patent specification at column 1, lines 1-10. Also, for convenience, I use italics to denote limitations from the challenged claims. Unless otherwise noted, all emphasis is added.

6. I am being compensated for my time at my standard consulting rate. I am also being reimbursed for expenses that I incur during the course of this work. My compensation is not contingent upon the results of my study and analysis, the substance of my opinions, or the outcome of any proceeding involving the ’801 patent. I have no financial interest in the outcome of this matter or in any litigation involving the ’801 patent.

7. I understand that another party, Meta Platforms, Inc. (“Meta”), has challenged the ’801 patent in *inter partes* review proceedings at Case No. IPR2024-00247 (“Meta-MDT-IPR”), which was instituted by the Patent Trial and Appeal Board. I refer in my declaration below to some of the positions and issues raised in that proceeding, including as it pertains to claim construction of certain claim terms in the ’801 patent.

I. Qualifications

8. I believe I am well qualified to render useful opinions on this matter. I will briefly summarize my knowledge, training, and experience here. A more detailed summary of my background, education, experience, and publications is set forth in my curriculum vitae (CV), which is submitted as EX-1004.

9. I received my Bachelor of Science degree in Physics from Massachusetts Institute of Technology ("MIT") in 1990. I also received my Bachelor of Science degree, Master of Science degree, and Ph.D., all in Electrical Engineering and Computer Science, from MIT in 1989, 1991, and 1998 respectively.

10. My college studies focused on communications and data networking. My undergraduate and graduate coursework pertained to telecommunication networks optical communications, and data networking. I maintained both the computer workstations and networking devices in my networking research group, along with other graduate students within the group.

11. I served as a teaching assistant for the Computation Structures course several times. This course taught low-level computer architecture and included a laboratory component that involved building a central processing unit ("CPU") from discrete components from the gate level and higher. As a student this course, I redesigned the CPU hardware and software to raise the average speed by a factor of 30. I then became a head laboratory assistant and teaching assistant as an

undergraduate student, and later became head teaching assistant as a graduate student.

12. I was a research assistant in the Telemedia Network Systems ("TNS") group in the Laboratory for Computer Science as part of my doctoral research at MIT. This group built a high-speed gigabit network and created applications that ran over the network such as remote video and audio capture, processing, and display on computer terminals.

13. I set up the TNS group's web server. Using this server, the TNS group was the first group to initiate a remote video display over the World Wide Web. Vice President Al Gore visited our group in 1996 and received a demonstration of—and remotely drove—a radio-controlled toy car with a wireless video camera mounted on it; the video was encoded by TNS-designed hardware, streamed over the TNS-designed network and displayed using TNS-designed software. I was also able to modify a web server to determine the location of the client, and present different web pages based on the client's location. I co-authored and presented papers on these video demonstrations and dynamic webpages at the first World Wide Web conference.

14. I defended and submitted my Ph.D. thesis, titled "Designing Networks for Tomorrow's Traffic," in January 1998. As part of my thesis research, I analyzed local-area and wide-area flows to show a more efficient method for routing packets

in a network, based on traffic patterns at the time. My thesis also addressed real-time streamed audio and video. The network traffic that I analyzed was IP protocol traffic, including User Datagram Protocol ("UDP") and Transmission Control Protocol ("TCP").

15. I worked at NBX Corporation as a Senior Scientist and Engineer from 1997 to 1999, and worked on the first fully featured business telephone that operated on data networks. I designed the core audio reconstruction algorithms for the telephones which depacketized the voice data and reconstructed the audio, and the voice data packet transmission algorithms. I created a system to capture and analyze network packets sent by devices in the NBX system for aid in testing and debugging. I also designed and validated the core packet transport protocol used by the phone system. In addition, I designed and oversaw the development of the underlying transport protocol used by the NBX100 phone system for reliable packet transport. This transport protocol is still estimated to be used hundreds of millions of times daily. I also served as lead architect in designing NBX's next-generation system, and worked with NBX's successor 3Com to demonstrate the phone system over cable equipment infrastructure in 1999.

16. From 1999 to 2004, I worked at Teradyne and its successor Empirix, which developed and provided functional and load test tools for telecommunication protocols and systems. I rebuilt Empirix's primary testing product, which could pull

data from a database to provide variation of data submitted to the web applications, and then to extract data from a web page to populate a database with key results computed by the web site after customized data is submitted. This product, PacketSphere, was Empirix's most successful new platform introduction and received several industry awards.

17. I also worked at BBN Technologies Corp. from 2004 to 2008. BBN Technologies is a technology R&D company with expertise in acoustics, speech recognition, and communications technology. I helped create EveryZing, formerly PodZinger, which is a public audio and video search engine that utilizes speech recognition technology.

18. I am a named inventor on several U.S. Patents. The patents and applications are listed in my CV.

II. Understanding of Relevant Legal Principles

19. I am not a lawyer, and I will not provide any legal opinions. Although I am not a lawyer, I have been advised certain legal standards are to be applied by technical experts in forming opinions regarding the meaning and validity of patent claims.

20. I understand that a patent claim is invalid if it is anticipated or obvious in view of the prior art, and that a claim can be unpatentable even if all of the requirements of the claim cannot be found in a single prior-art reference. I further

understand that invalidity of a claim requires that the claim be anticipated or obvious from the perspective of a person of ordinary skill in the art at the time the invention was made.

21. I have been informed that a patent claim is invalid if it would have been obvious to a person of ordinary skill in the art. In analyzing the obviousness of a claim, I understand the following factors may be taken into account: (1) the scope and content of the prior art; (2) the differences between the prior art and the claims; (3) the level of ordinary skill in the art; and (4) any so called "secondary considerations" of non-obviousness, if they are present. I am not aware of any evidence of secondary considerations of non-obviousness relevant to the '801 patent. I reserve the right to supplement this Declaration if Patent Owner ("PO") introduces evidence of secondary considerations of non-obviousness.

22. I understand that to prove that prior art or a combination of prior art renders a patent obvious, it is necessary to:

> (1) identify the particular references that, singly or in combination, make the patent obvious;
> (2) specifically identify which elements of the patent claim appear in each of the asserted references; and
> (3) explain why a person of ordinary skill in the art would have combined the references, and how they would have done so, to create the inventions claimed in the patent. I further understand that exemplary rationales that may support a conclusion of obviousness include:

- combining prior art elements according to known methods to yield predictable results;
- simple substitution of one known element for another to obtain predictable results;
- use of known technique(s) to improve similar devices (methods or products) in the same way;
- applying a known technique to a known device (method or product) ready for improvement to yield predictable results;
- "obvious to try" – choosing from a finite number of identified, predictable solutions with a reasonable expectation of success; known work in one field of endeavor may prompt variations of the work for use in either the same field or a different field based on design incentives or other market forces if the variations are predictable to a person of ordinary skill in the art; and
- some teaching, suggestion, or motivation in the prior art that would have led a person of ordinary skill in the art to modify the prior art reference or to combine prior art reference teachings to arrive at the claimed invention.

23. I have been informed that, in considering obviousness, hindsight reasoning derived from the patent-at-issue may not be used.

III. ’801 Patent

24. The ’801 patent, filed February 7, 2014, claims priority through three continuations to U.S. Patent 7,599,983, filed June 18, 2003, which claims priority to Provisional 60/389,430 filed June 18, 2002. Petitioners do not acquiesce the ’801 patent is entitled to priority of the provisional or any listed priority patent. Regardless, each applied reference was filed or published before June 18, 2002.

25. The ’801 patent “relates generally to network-based communications systems, and more particularly to techniques for information content management in such systems.” (EX-1001, 1:18-20.) The patent also describes providing content from a mobile device, along with “information associated with at least one wireless networking functionality of the mobile device” to at least one server for insertion into a specified application-based information channel. (EX-1001, 2:64-67.)

A. Overview of the ’801 Patent

26. The ’801 patent identifies “accessing of information content over wireless networks via web-enabled mobile devices” as among “the most rapidly expanding aspects of wireless networking.” (EX-1001, 1:30-32.) Figure 1A of the ’801 patent, (reproduced below) “shows an example network-based communication system 10” including “wireless network 12 coupled to the Internet 14, a set of mobile devices 15, a set of servers 16 and a set of user terminals 18.” (EX-1001, 3:54-58.)

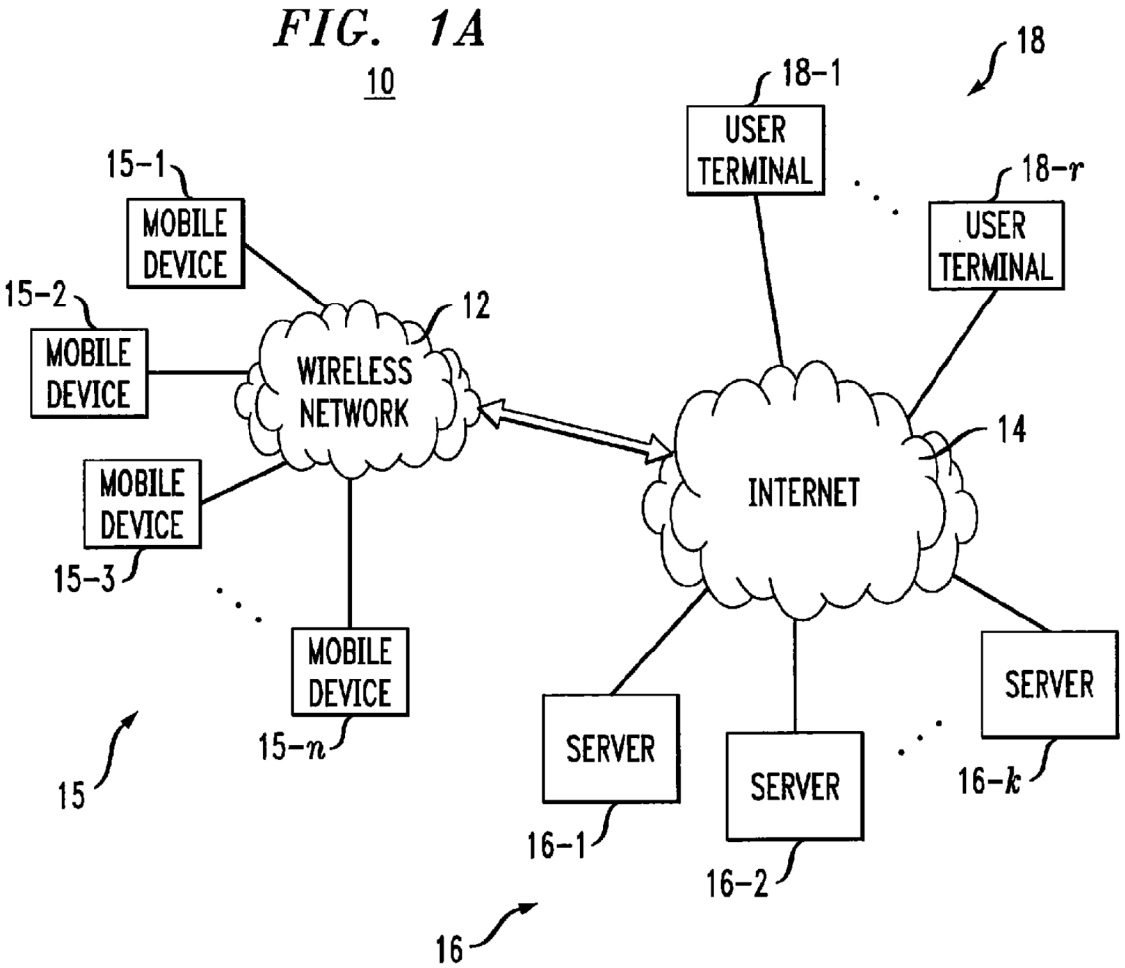

'801 patent, Figure 1A

27. The Background purports to address the challenge of "facilitating the process of creating, publishing, distributing or otherwise managing information content so as to provide optimal presentation consistent with the limited display space and navigational capabilities of typical mobile devices." (EX-1001, 1:41-45.) This section also identifies "mobile telephones, personal digital assistants (PDAs), [and] palmtop computers" as typical mobile devices. (EX-1001, 1:33-34.) Further, the '801 patent admits in this section that it is "well-known" these wireless devices

"provide access to the Internet" and "support other types of wireless networking functionality, such as messaging, distributed collaboration, and location-based services." (EX-1001, 1:34-39.)

28. The patent discloses that the system "provides at least one content management site accessible to a system user" including "M-channels" which "allow unsophisticated users to easily and efficiently author message data or other types of information content to be made accessible via a collaborative workspace, a data mailbox, a collaborative community, or other type of mobile site …." (EX-1001, 5:18-20, 8:17-23.) Such mobile sites may be associated with "a group comprising multiple members having a common interest," (EX-1001, 6:30-32), "an event," (EX-1001, 6:50-51), "a game," (EX-1001, 7:30-31), or "a user of IM, SMS, MMS, email or other type of messaging service," (EX-1001, 7:42-44), among other associations. (EX-1001, 6:30-8:12.)

29. The main menu page in this example includes information identifying user account information and the particular mobile sites associated with that user, page navigational links, mobile site information associated with a selected one of the mobile sites associated with the user, M-channel information 808, and a delete site field. (EX-1001, 13:46-52.)

FIG. 8

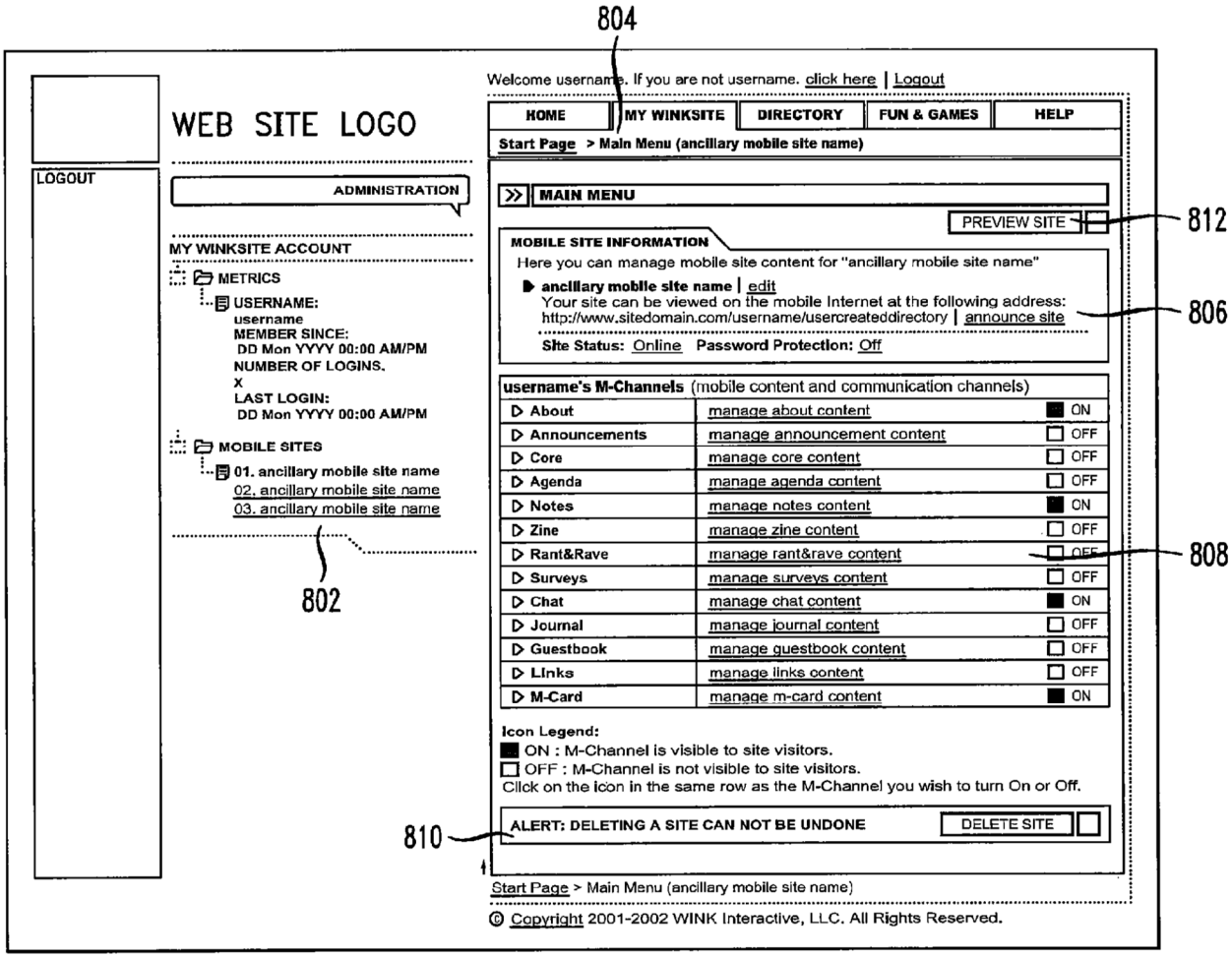

'801 patent, Fig. 8

30. As noted above, according to the '801 patent, these "M-channels allow unsophisticated users to easily and efficiently author message data or other types of information content to be made accessible via a collaborative workspace, a data mailbox, a collaborative community, or other type of mobile site or portion thereof generated or otherwise managed in the system 10." (EX-1001, 8:17-23.)

31. The '801 patent provides examples of M-channels:

> Examples of M-channels suitable for use in the illustrative embodiment include channels denoted herein as mobile ID/business card (also referred to as a "contact" M-channel), announcements, chat, events, guest book, diary/journal, bookmarks/links, discussion forum, survey/poll, newsletter/zine, notes, email, address book, contribute/ donate, mobile volunteer management, company directory, in/out board, field reports, feedback, form builder, live data/in-out syndication, mobile document library, products catalog/shopping cart, services catalog/shopping cart, appointments, task list/assignments, promotions, offers, coupons, sweepstakes, contests, photo blog, etc.

(EX-1001, 8:33-44.)

B. Level of Ordinary Skill in the Art

32. I understand that certain issues relating to the validity of the '801 patent must be judged from the perspective of a person of ordinary skill in the relevant art, as I discuss below. I have been asked to define the level of a "person of ordinary skill in the art" or "POSITA" at the time the alleged invention as claimed was made. In deciding the level of ordinary skill, I have considered the following factors, which I have been informed are relevant to the determination of ordinary skill in the art.

- levels of education and experience of persons working in the field;
- types of problems encountered in the art;
- prior art solutions to these problems;
- rapidity with which innovations are made; and
- sophistication of the technology.

33. In my opinion, a POSITA would have a bachelor's degree in electrical engineering, computer science, or similar field, with two years of experience in developing and implementing network-based computer systems that interact with mobile devices, such as systems for storing and retrieving information over the Internet or communicating using the Web using wireless mobile devices. A person could also have qualified as a POSITA with some combination of (1) more formal education (such as a master's of science degree) and less technical experience, or (2) less formal education and more technical or professional experience.[1]

C. Prosecution History

34. During prosecution, the Examiner issued a single Office Action, rejecting all pending claims on the grounds of nonstatutory double patenting over claims 1-20 of U.S. Patent 8,135,801. (EX-1002, 231-234.) In response, Applicant argued that the pending claims and patent's claims were distinct because the pending claims included the limitation "integrating into the mobile information channel information associated with at least one networking functionality of said at least one network," whereas U.S. Patent claims 8,135,801 did not. (EX-1002, 300.) In

[1] I understand that PO did not dispute this characterization of a POSITA in Meta-MDT-IPR.

addition to making this argument, Applicant also filed a terminal disclaimer to overcome the rejection. (EX-1002, 294.)

35. The Examiner allowed the claims on July 7, 2014, and in doing so, identified U.S. Patent 7,003,546 to Cheah ("Cheah") as the closest prior art of record, and stated the prior art of record failed to disclose the following.

> activating the mobile information channel responsive to input received from the first user via the interface;
>
> inserting content provided by the first user into the mobile information channel;
>
> receiving additional content relating to the mobile information channel from one or more of said additional users via one or more respective mobile devices associated with at least one wireless network;
>
> inserting at least a portion of the additional content into the mobile information channel; and
>
> integrating into the mobile information channel information associated with at least one wireless networking functionality of said at least one wireless network.

(EX-1002, 320.)

D. Claim Construction

36. I understand that "claim construction" is the process of determining a patent claim's meaning. I understand that the Patent Office applies the same claim construction standard used in district courts which seeks to give claim terms their

plain and ordinary meaning to a POSITA at the time of the claimed invention in view of the claims, specification, and prosecution history. I also understand that if the patent applicant gave a term a special meaning in the specification or during prosecution, then the special meaning should be used.

37. I understand that in the Meta-MDT-IPR and the co-pending district court litigation, *Mobile Data Tech. v. Meta Platforms,* 7:22-cv-00244 ("MDT-Meta-Litigation"), Meta and Patent Owner have taken the following claim construction positions reproduced below. (*See* EX-1009, 1-3; EX-1010, 21-31; EX-1011, 2-8.)

38. For purposes of my analysis here, I do not believe express claim constructions are necessary for the terms of the challenged claims, because the prior art renders the claims obvious under the proposed constructions identified above or any other reasonable construction. My analysis discusses the proposed constructions and explains why, under each of them, the limitations are disclosed and rendered obvious by the prior art.

1. "Mobile Device"

39. I dispute PO's narrow Meta-MDT-IPR construction because it is contrary to the express definition in the specification. (*See, e.g.*, EX-1001, 4:38-41.) I apply the plain meaning for the term which is consistent with Meta's Meta-MDT-IPR and MDT-Meta-Litigation constructions.

MDT-Meta-Litigation	
PO	plain and ordinary meaning; alternatively, "a piece of handheld equipment" (EX-1009, 3)
Meta	"any type of portable information processing device capable of being configured for communication over a network, including but not limited to a mobile telephone, a personal digital assistant (PDA), a palmtop computer, a hand-held computer, a laptop computer, a tablet computer, a global positioning system (GPS) receiver or other GPS-based navigational device, an MP3 player or other type of audio player, a pager, a watch or other timepiece, a camera, or a portable game player" (EX-1009, 3)
Meta-MDT-IPR	
PO	"a portable device with limited display space and limited navigational capabilities that connects to a mobile site and/or mobile channel via a wireless network" (EX-1010, 24)
Meta	construed based on express definition: "The term 'mobile device' as used herein is intended to include, without limitation, any type of portable information processing device capable of being configured for communication over a network" (EX-1011, 2-3)

2. "Mobile Information Channel"

40. I note that the term "channel" has different meanings based on the context in which it is used. For example, in the context of an Internet Relay Chat (IRC), a channel is "a named, topical-focused forum where you can chat in real time with other computers." (EX-1028, 4.) For media pushed to a user device, the term "channel" is "a named link to a network-based transmitter to which a user can tune." (EX-1028, 4.) The PO's MDT-Meta-Litigation construction and Meta's Meta-MDT-IPR construction use the term in a manner consistent these exemplary meanings. The

prior art as I describe in my analysis meets this term under any of the applied constructions.

MDT-Meta-Litigation	
PO	plain and ordinary meaning; alternatively, "a medium for transferring information that allows mobile device users to author content" (EX-1009, 1-2)
Meta	"a virtual location at the content management site at which user-authored content may be added for transmission to the mobile web site" where "content management site" = "a web site that allows a user without programming to create and manage content on a mobile website, or a portion thereof." (EX-1009, 1-2)
Meta-MDT-IPR	
PO	"a component of a mobile site configured to permit a wide variety of mobile devices to send and receive content over a wireless network" (EX-1010, 21-22)
Meta	"a medium for transferring information that allows mobile device users to author content" (EX-1011, 5)

3. "Wireless Network"

41. In the Meta-MDT-IPR, the parties dispute the construction primarily based on the inclusion of language that the wireless network is "separate from the internet" and "facilitates connection to the internet." While I also dispute PO's construction, the prior art discloses the term under both constructions.

Meta-MDT-IPR	
PO	"a network separate from the internet that facilitates connection to the internet by mobile device" (EX-1010, 30)
Meta	"a network that allows a device to communicate wirelessly over a network" (EX-1011, 7)

IV. GROUND 1: The Combination of Randall and Forsyth Renders Claims 1, 7-12, and 14-25 Obvious

A. Overview of the Combination

42. The combination of WO 02/17652 to Randall, et al. ("Randall"; EX-1005) and U.S. Patent 7,047,030 to Forsyth, et al. ("Forsyth"; EX-1006) discloses every limitation of claims 1, 7-12, and 14-24. Randall and Forsyth were both assigned to Symbian Limited ("Symbian") and describe different aspects of functionality provided by Symbian.

43. Symbian was a company jointly owned by Nokia, Ericsson, Motorola, Matsushita (Panasonic) and Psion. (Allin, 1.) "The nucleus of the company was formed from Psion Software" and the "Symbian [operating system ("OS")] is an evolution of Psion's EPOC Release 5." (Allin, 1.) Symbian provided technical documents describing use of its OS devices in a wireless client-server infrastructure that supported a wide variety of application/services. Such a client-server infrastructure is described in Randall which along with Forsyth describes use of this infrastructure to provide the Forums service.

44. Randall is directed to an "open, universal data infrastructure for wireless information devices" used within a wireless client-server infrastructure. (*See* Randall, 3:10-11.) Randall's data infrastructure is designed for use "by application developers to write new applications by extending the attributes of the database" which forms the core of the data infrastructure, "using a *standard protocol*, as opposed to a closed and proprietary protocol." (Randall, 3:10-13 (emphasis by italics in original).) One application discussed in Randall using its data infrastructure is Forums. (Randall, 40:15-41:14.)

45. Forsyth is directed to a "group communication method" using a "group object" to specify identities of group members. (*See, e.g.,* Forsyth, 1:15-16, 2:17-27.) Forsyth's "group object" is application independent and as such can be created in one application and then immediately used in other applications to specify a group for group communication. (Forsyth, 24:32.) Forsyth describes use of its "group objects" by Forums. (*See, e.g.*, Forsyth, 2:41-60.) Forsyth provides a detailed discussion of Forums enhanced through the use of group objects and presents numerous use scenarios of this enhanced version of Forums. (*See, e.g.*, Forsyth, 5:35-7:13 (Group Based Text Messaging (Scenario 1)), 7:18-57 (Discussion of Photos (Scenario 2)), 7:58-9:4 (Social Scheduling (Scenario 3)), 9:5-35 (Digital Memento from a User's Birthday (Scenario 4)).)

46. I describe both Randall and Forsyth in further below.

1. Randall

47. Randall published on February 28, 2002. (Randall, Bibliography Page (43).)

48. Randall describes that a "large number of entirely new applications are [] being developed to take advantage of the powerful conflux of personal communications, wireless information transfer and computing made possible by the Symbian platform." (Randall, 1:26-28.) Many applications "are client-server based (with the wireless information device itself constituting an advanced client), transferring information to and from servers, which are often internet or WAP servers." (Randall, 1:28-30.) Randall explains that "a major barrier to the fast and efficient design and deployment of applications needing access to shared content is the need to custom build the data sharing infrastructure for each new application." (Randall, 2:25-27.) Randall therefore presents "an open, universal data infrastructure for wireless information devices which can be used by application developers to write new applications by extending the attributes of the database using a *standard protocol*, as opposed to a closed and proprietary protocol." (Randall, 3:10-13 (emphasis by italics in original).) Accordingly, "a huge range of new applications requiring access to shared content" can "be rapidly and cheaply constructed and rolled out since the data infrastructure which allows content to be shared is pre-fabricated." (Randall, 3:17-19.)

49. Randall also discusses various applications and services using a client-server framework with Symbian's data infrastructure. One such service is Forums. (*See, e.g.,* Randall, 36:6-9.) Randall explains that "Forums also known as chat rooms are likely to be very popular on wireless devices, especially in light of the success of SMS." (Randall, 40:16-17.) Forums "allows several people to be part of a 'channel' or room, which is usually themed; for instance supporters of a football team may meet in a channel devoted to that team to discuss the team." (Randall, 40:17-19.) In use, a "user logs on to a forum" and "he or she will have a name associated with them, it may be a nickname instead of their real name." (Randall, 40:28-30.) "Once they are logged on they can exchange and receive messages with those also on the channel." (Randall, 41:1-2.)

50. Randall illustrates an exemplary network infrastructure supporting Forums in Figure 4 below[2]. The Symbian infrastructure, through services like Forums, "acts in effect like a fully personalised web portal, yet with the information links not consolidated in one general area, but instead distributed to the domains in which they are most likely to be relevant to a user." (Randall, 13:22-24.). The Symbian infrastructure, illustrated below, includes "(a) internet servers hosting extensible databases; (b) wireless information devices which can access information on these databases; and (c) applications resident on these devices which present a

[2] Unless otherwise noted, all annotations to Figures have been added.

common set of APIs to plug-ins from commercial service providers." (Randall, 7:16-19.) That is, to offer the Forums service, a Forums application resides on the wireless device and a corresponding program exists on the server. The client and server communicate via a "communication means" (i.e., set of protocols). As shown, Symbian Forums also supports the ability for non-mobile (fixed) computing devices to connect to the Forums servers over what is labeled the "Internet." I provide an overview of wireless information devices, servers, communications means, and the extensible database below.

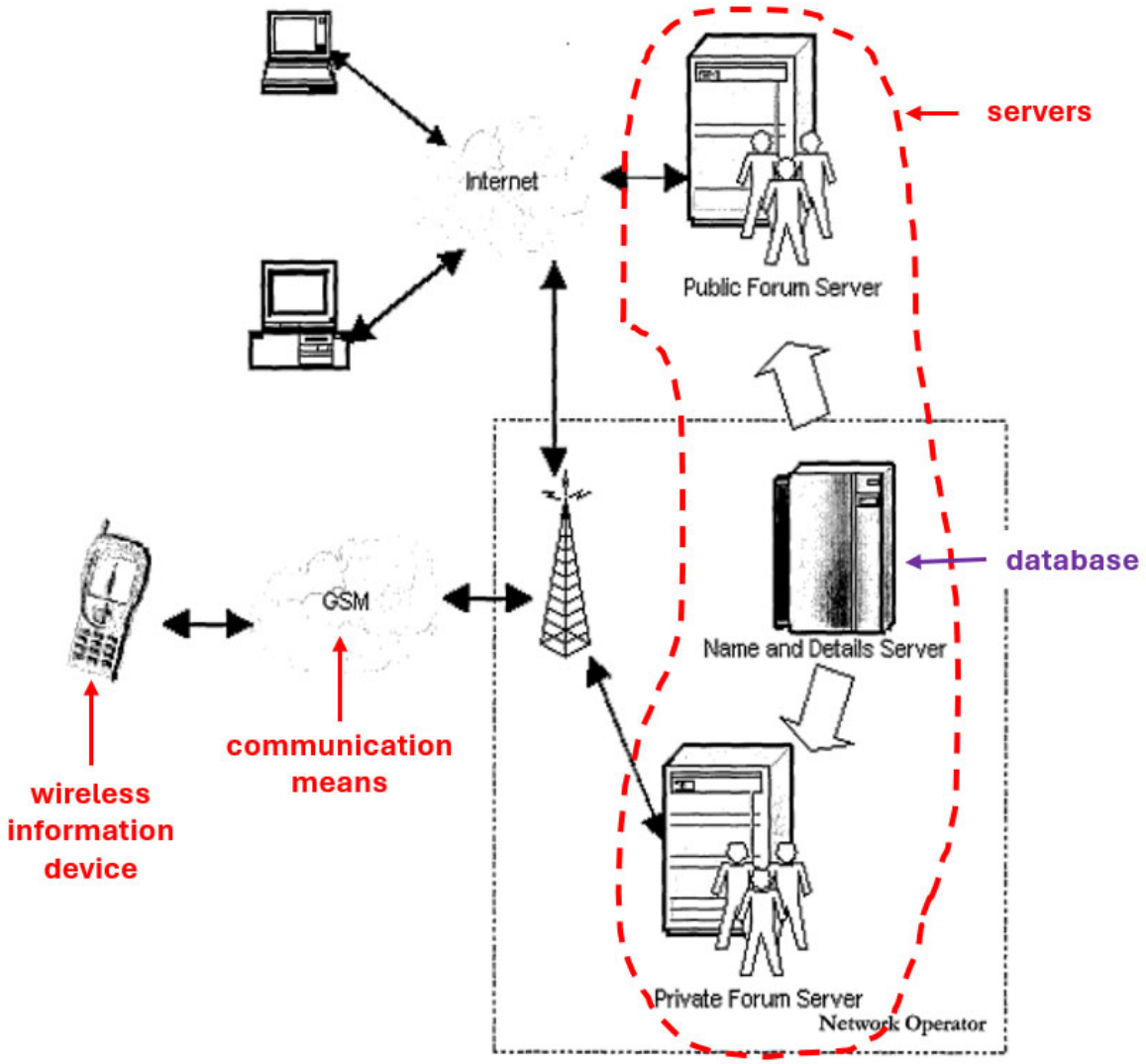

Symbian Forums—Randall, Figure 4

a) Client Devices: Wireless Information Devices

51. Wireless information devices used in Forums "run[] applications which access data by interacting with data component plug-ins supplied by commercial data services providers using a standardised set of APIs to access data." (Randall, 9:6-8.) Randall does not specify the implementation details of the client-side

application. However, based on Randall's disclosure of GSM and WAP, a POSITA would have understood the client-side application is either (1) a standalone application supporting WAP or GSM-messaging protocol (discussed below) or (2) a web browser (such as a WAP microbrowser). Wireless information devices may also "access the information held on the extensible databases running on central servers … without the plug-ins." (Randall, 9:11-13.) The "wireless information device (as well as web browsers) can access an entity's database by sending to the server an unchanging pointer or key (an 'ADS Number') which is unique to that entity." (Randall, 9:13-15.) Randall's "ADS numbers are typically constructed using text strings and can be though[t] of as defining a namespace." (Randall, 9:17-18.) The ADS number "in one implementation [is] an address on a web server – for example www.indirect.com/Alice." (Randall, 64:25-26.)

b) Servers

52. A Symbian Forums server "handle[s] all aspects of **storing and forwarding messages**[3] to the intended recipients." (Forsyth, 3:20-22; 6:9-10 ("message server stores … and forwards a copy of the message to each of the people on the address list").) Randall describes the server-side architecture as the "ServML" Framework. (Randall, 45:1-7.) ServML "embraces existing standards and initiatives" and "uses standard data transports such as WAP or http for data access."

[3] Unless otherwise indicated, all emphasis by bold has been added.

(Randall, 45:14-15.) "Although the [Symbian] server architecture is in many ways identical to the present Internet, the usage model is quite different." (Randall, 46:7-8.) Instead of passive data-viewing, "the Internet and its servers can be used by a mobile device to deliver enchanting services that far surpass the present PC-Internet model." (Randall, 46:8-10.) "The result will be the ability of wireless information devices to interact closely with applications and data on the Internet to deliver high quality services." (Randall, 46:12-13.) That is, in services like Forums, a program component exists on the server to provide the end-to-end service.

c) Communication means

53. Randall uses "existing transports" (communication means) for client-server communication such as "WAP to access the services on the server side" and "standard IP formats such as MIME, SMTP and HTTP" to "enable compatibility with Internet Messaging systems." (Randall, 58:23-27.) In addition to WAP, Randall also discloses use of GSM-SMS for transport over the wireless network. (*See* Randall, 12:11-15 (disclosing that a server could "send a SMS"), 14:10-11 ("This form of data transfer could be via SMS or packet delivery in packet based systems."), 15:16-17 ("Alice's device directly transfers this data to Bob using an appropriate mechanism (such as SMS or IPv6 data packet) without any server intervention."); *see also* Randall, 1:11-13 ("It includes devices able to communicate in any manner over any kind of network, such as GSM …"), Figure 6.)

54. The disclosure of HTTP indicates that the communication means, from non-mobile computers shown in Figure 4, is the world-wide web (WWW) because HTTP operating on top off TCP/IP is the most commonly used protocol on the web and because Randall mentions the "web" at various places. (*See, e.g.,* Randall, 8:25-83 (disclosing "internet servers hosting extensible databases with attributes remotely extensible by application authors" where "[t]he database contains information from or relating to many different entities" and "in effect represents a web page containing information specific to that entity"), 64:25-28 (disclosing one implementation where "[a]n ADS Number is … an address on a web server" (e.g., www.indirect.com/Alice) and "[t]his address is in effect a pointer to entity specific data held on the web server" (e.g., Alice's information)); WAP Architecture, 13.)

55. I discuss the WWW, WAP, and GSM-SMS communications means referenced in Randall below. I note that Randall does not provide details of these means because each was covered in standards documents and would have been well within the general knowledge of a POSITA by June 2002.

(1) WWW

56. The Internet World-Wide Web (WWW) architecture provides "a very flexible and powerful programming model." (WAP Architecture, 12.) Applications and content are "*browsed* by applications known as *web browsers.*" (WAP Architecture, 12 (emphasis by italics in original).) I note that browsers are not the

only programs that can initiate valid web transactions; any program that can create a TCP/IP connection and send a valid protocol request can get data from a web server. All servers and content on the WWW are named using an Internet-standard Uniform Resource Location (URL). (WAP Architecture, 12-13.)

57. As shown in Figure 1 from the WAP Architecture Specification published by the WAP Forum on July 21, 2001, a client device initiates a web transaction by making a request to a URL (e.g., through the web browser). If the requested content exists, it is returned by the web server (HTTP server) and displayed through the browser.

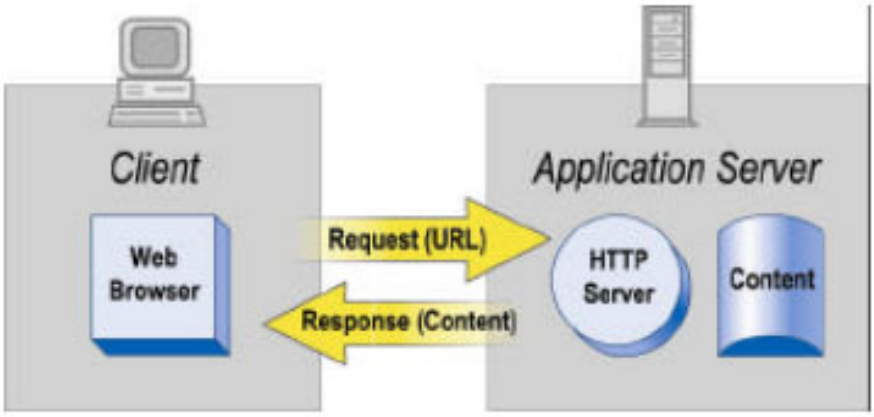

WAP Architecture, Figure 1

(2) WAP

58. "WAP content and applications are specified in a set of well-known content formats based on the familiar WWW content formats." (WAP Architecture, 13.) "Content is transported using a set of standard communication protocols" which are also "based on the WWW communication protocols." (WAP Architecture, 13.)

As shown below in WAP Architecture Figure 3, a WAP microbrowser "in the wireless terminal co-ordinates the user-interface and is analogous to a standard web browser." (WAP Architecture, 13.) However, as I noted above for the WWW, a client application can also be used instead of a microbrowser provided the application uses the WAP protocol stack to communicate with the server. WAP also provides a gateway (labeled as proxy) which "translates requests from a wireless protocol stack (e.g., the WAP 1.x stack—WSP, WTP, WTLS, and WDP) to the WWW protocols (HTTP and TCP/IP)." (WAP Architecture, 14.) The WAP proxy "allows content and applications to be hosted on standard WWW servers." (WAP Architecture, 14.) WAP Architecture specification explains the "nominal use of WAP will include a web server, a WAP proxy and WAP client." (WAP Architecture, 14.)

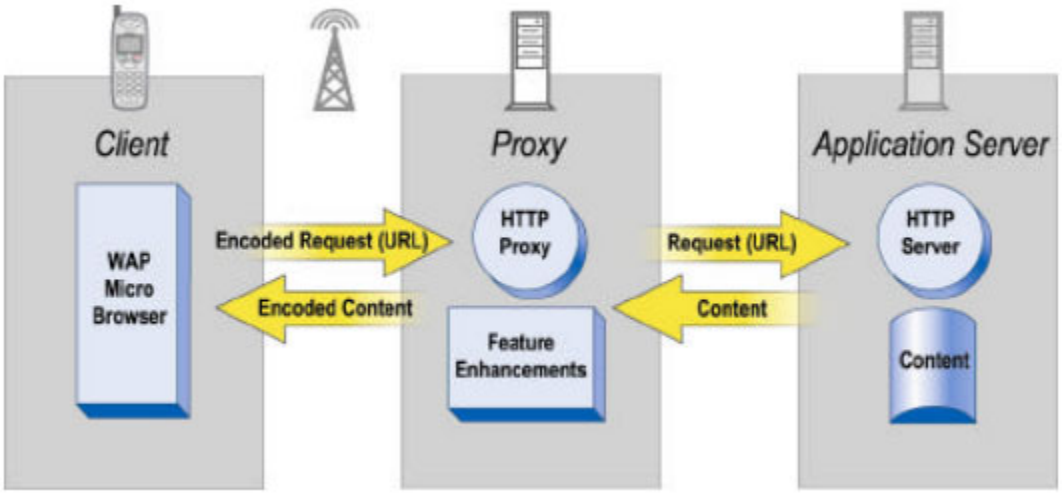

WAP Architecture, Figure 3

59. The WAP Stack, illustrated in WAP Architecture Figure 7 (below) is a layered protocol stack with each layer "provid[ing] a set of functions and/or services to other services and applications through a set of well-defined interfaces." (WAP Architecture, 18.) At the lowest layer are the "Bearer Networks" which include short message (SMS), circuit-switched data, and packet data (e.g., IPv4, IPv6). (*See* WAP Architecture, 18.) The transport service layer provides datagram transport via the Wireless Datagram Protocol (WDP). (WAP Architecture, 19.)

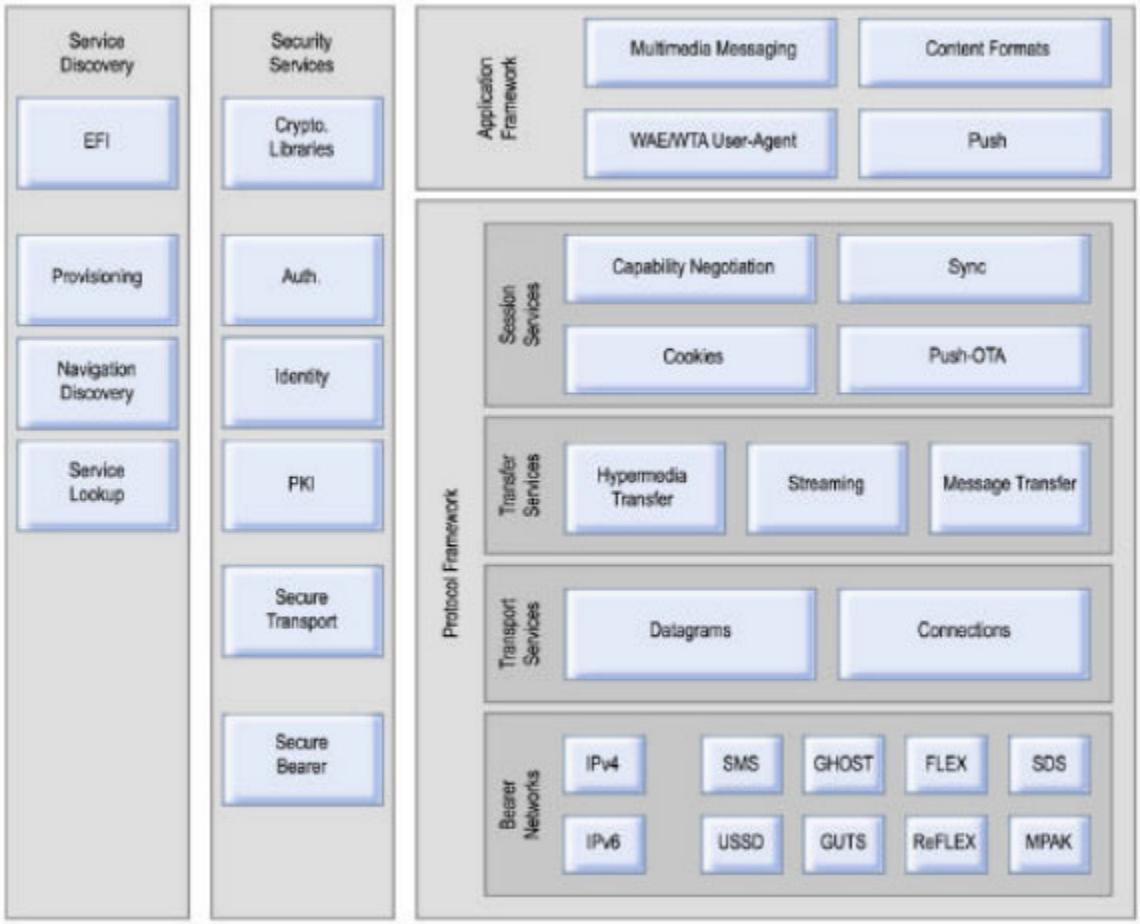

WAP Architecture, Figure 7

60. The transfer services provide streaming and message transfer via Wireless Session Protocol (WSP), Wireless Transport Protocol (WTP), and e.g., MMS Encapsulation protocol. (*See, e.g.,* WAP Architecture, 19.) Session services provide "for the establishment of shared state between network elements." (WAP Architecture, 19.) The application framework "provides a general-purpose application environment based on a combination of World Wide Web (WWW), Internet and Mobile Telephony technologies" with a primary objective "to establish an interoperable environment that will allow operators and service providers to build applications and services that can reach a wide variety of different wireless platforms in an efficient and useful manner." (WAP Architecture, 20.) The application framework includes multimedia messaging support, support for well-defined data formats such as color images, audio, video, animation, etc. and push service for network initiated data transmission to "applications resident on WAP devices." (WAP Architecture, 20.)

61. The following Figure from WAP Architecture is an illustrative configuration of a WAP 1.x gateway depicting the protocol stack at a WAP device, a WAP gateway, and a Web Server. As shown, the WAP gateway has an interface supporting the WAP stack allowing communication over a wireless network and an interface supporting the TCP/IP/HTTP stack allowing communication over the Internet.

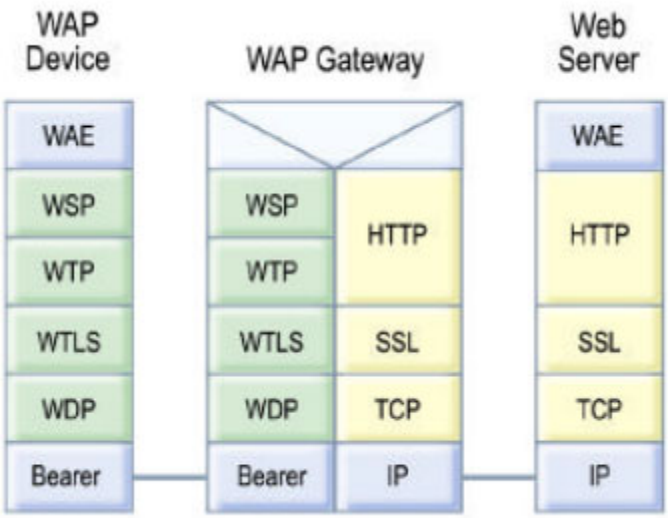

WAP Architecture, Figure 8

62. The Wireless Datagram Protocol specification, issued June 14, 2001 by the WAP Forum ("WDP"; EX-1014) provides the protocol profiles for operating WDP between a mobile device and server over GMS, as specified by Randall. (*See* WDP, 18-20.) I reproduce Figure 4-4 which illustrates the protocol profile for the WDP layer when operating over the GSM-SMS bearer service. The other profiles in WDP specification such as GSM-USSD, GSM Circuit-Switched Data, GSM-GPRS, and GSM Cell Broadcast are equally applicable.

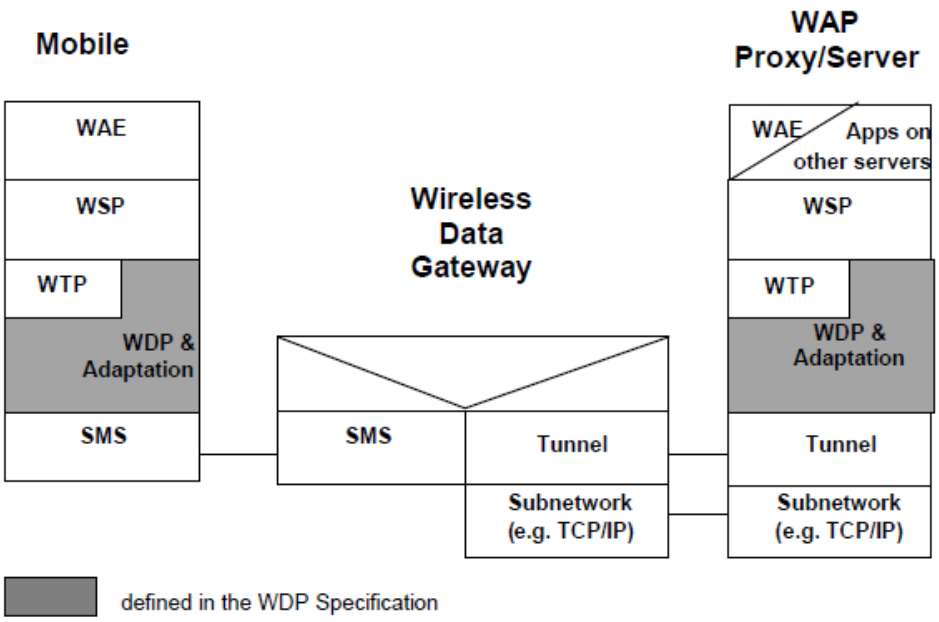

WDP Specification, Figure 4-4

(3) GSM-SMS

63. The "technical realization of short message service (SMS)" for GSM is set forth in ETSI TS 123 040 ("GSM SMS Standard"; EX-1015). I refer to version 3.6.0 of this standard released in September 2001. In GSM-SMS messaging, a mobile station can either send messages (referred to as mobile originating) or receive messages (referred to as mobile terminating). Mobile originated short messages are sent to a server, called the Service Centre, "which acts as a store and forward centre for short messages." (GSM SMS Standard, 6.)

d) Database

64. The internet servers of the Symbian infrastructure "host[] extensible databases with attributes remotely extensible by application authors using *a standard*

protocol over a network." (Randall, 8:25-26 (emphasis by italics in original); *see* Randall, 4:9-12 ("Because the remote server acts as a data repository open to any application which can structure data in conformance with a meta-language schema, it is capable of being used as the central resource which allows data sharing for any new application.").) The "database contains information from or relating to many different entities" and "is organised into information fields which an entity can complete or have completed." (Randall, 8:26-28.) "Information is placed onto the database by an entity so that it can be readily shared with other entities: the database in effect represents a web page containing information specific to that entity." (Randall, 8:29-31.)

65. The system database "is at the heart of much of the [Symbian] System's extensibility." (Randall, 66:3.) "Each piece of data on the server (the 'i-server') has an associated tag (or name) which defines its meaning." (Randall, 66:3-4.) The tags, referred to as "i-tags", "live under a unique category name that is allocated by Symbian to ensure that the global namespace is not polluted." (Randall, 66:4-6.) Each piece of data further has "an associated list of groups ('i-Groups['']) allowed to access the data." (Randall, 66:9-10.) As shown in Randall's Figure 4, the Forums service accesses the database when processing received messages from client devices.

66. Randall's Table 1 (reproduced below) provides examples of "the kinds of information fields which are possible for an individual." (Randall, 8:28-29.) Table 1 "is an example application view" of the i-Data for a user, Alice. (Randall, 66:17.) "Some information is entered by Alice (e.g., her name). Other information is entered automatically (e.g., location information from Bluetooth pods)." (Randall, 66:18-19.) A view of this database is "provided on Alice's mobile device to allow her to manage her data." (Randall, 66:19-20.) Although Randall's example uses a person, Randall teaches that other entity types can have a record stored on the database.

Table 1

Alice's iData			
Field/Attribute	**Category**	**Details**	**i-Groups**
First name	personal	Alice	all
Family name	personal	Edwards	all
Title	work	European Marketing Manager	all
Company Name	work	Wireless Information Device gets R Us	all
Company Address	work	1 Science Park Rd, London, N1	all
Company E-mail	work	alice.edwards@Wireless Information Device getsrus.com	business 1
Company switchboard	work	0207 200 2000	all
Company Direct	work	0207 200 2012	business 1
Mobile Phone	work	0840 1234 567	business 1, friends
Home Phone 1	work	0208 341 1234	friends, family
Home Address	work	25 The Gables, Hampstead, London, NW3	family
My photo	photos		friends
Childhood photo	photos		family
Home note	notice	Sorry about dinner ☹	partner
Work note	notice	In a meeting with Tim till 7pm	work 1
My mood now	mood	Very tired	all
Tel Call Subject		"Dinner Tonight"	
Bluetooth	location	Bluetooth pods 1000-1020 ...Sentinel room 2…	
GPS	location	London W1, Seymour St.	partner
Hobby	preferences	Photography, travel	friends
Book	preferences	Maverick	friends
AlbumOfTheWeek	InstaPoll		friends

Randall, Table 1

2. Forsyth

67. Forsyth issued on May 16, 2006 from U.S. Application 10/476,261, which is a National Stage Entry of PCT/GB02/02046, filed on May 2, 2002.

68. Forsyth enhances the functionality of the Symbian infrastructure through use of group objects which provide "a group communication method for a wireless information device." (*See* Forsyth, 1:15-16.) Specifically, "the end-user of the device defin[es] the identities of the end-user[s] that form group." (Forsyth, 2:4-5.) A group object is then constructed "that defines or references members of the group in a way that enables communication to take place from the device and all other members of the group." (Forsyth, 2:6-9.) This group object is application independent. It can be "used by a first application running on the device to enable communication from the device to be made automatically to all members of the group." (Forsyth, 2:10-12.) Another application running on the device, "unrelated to the first application," can also use the same group object "to enable communication from the device to be made automatically to all members of the group." (Forsyth, 2:13-16.)

69. Through the use of content and application independent group objects "activities performed in different applications but which also involve the same group can re-use the same object." (Forsyth, 5:21-23.) "In this way, a user can organise people and entities (e.g., companies, clients etc.) into different group objects and can

re-use that group object in many different applications (e.g., instant messaging, voice, e-mail, etc)." (Forsyth, 5:23-26.)

70. Forsyth describes the use of its group objects in Symbian Forums which "is designed specifically to allow current and very popular internet type services (e.g. chat/instant messaging between groups) to be handle[d] effectively between mobile devices and to enable a new generation of group based communication services." (Forsyth, 2:40-47.) "Forums offers many advantages to group communication since it is an easy to understand messaging tool that facilitates open discussion amongst a group and allows multiple chat-style conversations to take place simultaneously." (Forsyth, 5:26-30.) Forums described in Forsyth is the Forums application described in Randall, enhanced through the use of group objects.

71. Forsyth describes several Scenarios that illustrate the operation of group-object enhanced Forums: Group Based Text Messaging (Scenario 1), (*see* Forsyth, 5:35-7:13), Discussion of Photos (Scenario 2), (*see* Forsyth, 7:18-57), Social Scheduling (Scenario 3), (*see* Forsyth, 7:58-9:4), and Digital Memento from a User's Birthday (Scenario 4), (*see* Forsyth, 9:5-35). Forsyth also describes numerous services, features, and functions which that can be used within each individual Forum. I discuss these Scenarios and representative services/features/functions in further detail throughout my analysis.

3. Motivation to Combine Randall and Forsyth

72. A POSITA would have been motivated to combine Forsyth's teachings regarding the use of group objects and additional features and functions to enhance the Forums service taught by Randall. The resulting combination, utilizing Randall's Forums network infrastructure, provides a Forums service having a client-based program and a server-based program, which utilizes Randall's extensible database. The Forums service in the combination utilizes Forsyth's group objects as well as the features and functions taught by both Randall and Forsyth to provide an enhanced Forums service.

73. Randall and Forsyth are both in the same field of the '801 patent—"network-based communication systems." (*See* EX-1001, 1:24-26 ("The present invention relates generally to network-based communication systems, and more particularly to techniques for information content management in such systems."); Randall, 40:16-18 (Forums are "also known as chat rooms" and "allow[] several people to be part of a 'channel' or room"); Forsyth, 1:15-16 ("This invention relates to a group communication method for a wireless information device.").) Randall and Forsyth are also reasonably pertinent to problems addressed by the ' 801 patent, namely "overcom[ing] one or more of the drawbacks of" conventional techniques for content sharing for mobile devices. (*See, e.g,* EX-1001, 2:1-4.)

74. A POSITA would have been motivated to make the above combination because Forsyth explicitly motivates the combination. Forsyth stresses the benefits of group objects noting that its "invention is founded on the insight of providing an object which defines solely the identities of members of a group" and "as such, it is application (and hence also content) independent." (Forsyth, 2:24-27.) "This means that a group created in one application (e.g. for text based instant messaging) can immediately be used in other applications (e.g. a diary/agenda application could use that same group as the recipient list for an invitation to a meeting)." (Forsyth, 2:27-32.) "Similarly, data specifically created for one group and in one application can be re-used in a different application and the data viewed appropriately for that different application." (Forsyth, 2:34-37.) Forsyth further describes the "strengths" of Forums application utilizing group objects "over conventional communications." (*See* Forsyth, 2:54-57.) These relative strengths are illustrated in Forsyth's Figure 1 (reproduced below).

Capability:	**Can you create a discussion between group members on your own device?** (Important since it facilitates setting up a group discussion)	**Push delivery?** (Push is more convenient to mobile users)	**Is it possible to retain a long term record of exchanges between group members?** (An important attribute for many new kinds of services)	**Can you deliver messages to all members of a group, or is it restricted to one to one?** (Clearly critical to group based messaging)	**Do all group members see the same, unitary message thread, or are there instead many separate individual messages?** (A single, unitary message entity (e.g. a thread) makes message organisation and navigation far easier.)	**If a recipient is off-line (e.g messaging app not open), are they alerted anyway?** Potentially very important for mobile useage because of the high proportion of time users may not be on-line (i.e. actively using their messaging application).
Web bulletin board	No	No	Yes	Yes	Yes	No
Chat/instant messaging	Yes	Yes	No	Yes	Awkward	No
Group e-mail	Yes	No	Awkward	Yes	No	No
SMS	Awkward	Yes	No	Awkward	No	Yes
Forums	**Yes**	**Yes**	**Yes**	**Yes**	**Yes**	**Yes**

Table 1

Forsyth, Figure 1

75. Therefore, a POSITA would have been motivated to combine Forsyth's teachings with Randall's Forums provided on the Symbian network infrastructure with an extensible infrastructure to obtain the advanced capabilities provided by Forsyth.

76. Additionally, a POSITA when considering Randall's Forums service, would have been motivated to search for other references directed to Forums and its enhancements. As I noted above, Forsyth was originally assigned to Symbian. A POSITA would have been motivated particularly to search for references associated with Symbian for implementation details and enhancements and would have been led to Forsyth.

77. Finally, the combination is nothing more than the application of a known technique (Forsyth's group objects, features and functions) to a known method/product (Randall's Forums service implemented with extensible database infrastructure) which was ready for further improvement.

78. A POSITA would have had a reasonable expectation of success in the combination and the results of the combination would have been predictable because both references are directed to the same service, Forums, are based on devices using the Symbian OS and use features and functionality associated with Symbian. The Symbian operating system was well-known and Symbian offered many technical developer resources prior to the earliest possible priority date of the ' 801 patent. (*See, e.g.,* EX-1017; Allin, 4-6, 229-31; Jipping, 11-14.)

B. Independent Claims

79. The ’801 patent includes four independent claims—a method claim (claim 1), a computer-program product (“CPP”)-style claim (claim 22), a device claim (claim 23), and a network-based communication system claim (claim 25).

1. Claim 1

a) Preamble [1P]: “method”

80. The combination of Randall and Forsyth discloses a method for performing the actions recited in limitation [1A]-[1E] as discussed in §§IV.B.1.b-c.

b) Limitations [1A]-[1C]

[1A] providing an interface permitting a first user to control activation of a mobile information channel through which the first user can share access to content with a plurality of additional users;
[1B] activating the mobile information channel responsive to input received from the first user via the interface
[1C] inserting content provided by the first user into the mobile information channel

81. Forums is described by Forsyth as a “new approach to group communication … designed specifically to allow current and very popular internet type services (e.g. chat/instant messaging between groups) to be handle[d] effectively between mobile devices and to enable a new generation of group based communication services.” (Forsyth, 2:40-47.) As explained by Forsyth, “Forums offers many advantages to group communication since it is an easy to understand messaging tool that **facilitates open discussion amongst a group and allows**

multiple chat-style conversations to take place simultaneously." (Forsyth, 5:27-30.) That is, Forums is a platform allowing users to share access to content (text messages, photos, documents, audio files etc.) with other users.

(1) "Providing an Interface"

82. The combination of Randall and Forsyth discloses "*providing an interface permitting a first user to control activation of a mobile information channel*[4]." The Forums service is based on a client-server model implemented on a network such as the network illustrated in Randall's Figure 4 (below). (Randall, 40:15-41:2.) Through this network architecture, services, like Forums "act[] in effect like a fully personalised web portal, yet with the information links not consolidated in one general area, but instead distributed to the domains in which they are most likely to be relevant to a user." (Randall, 13:22-24.) The Symbian Forums infrastructure, illustrated below, includes "internet servers" hosting individual Private and Public Forums (as enhanced by Forsyth), "internet servers" hosting extensible databases (as taught by Randall), wireless information devices which access these servers/databases, and non-mobile (fixed) computing systems (represented by traditional desktop PC).

[4] Claim language is indicated by italics throughout.

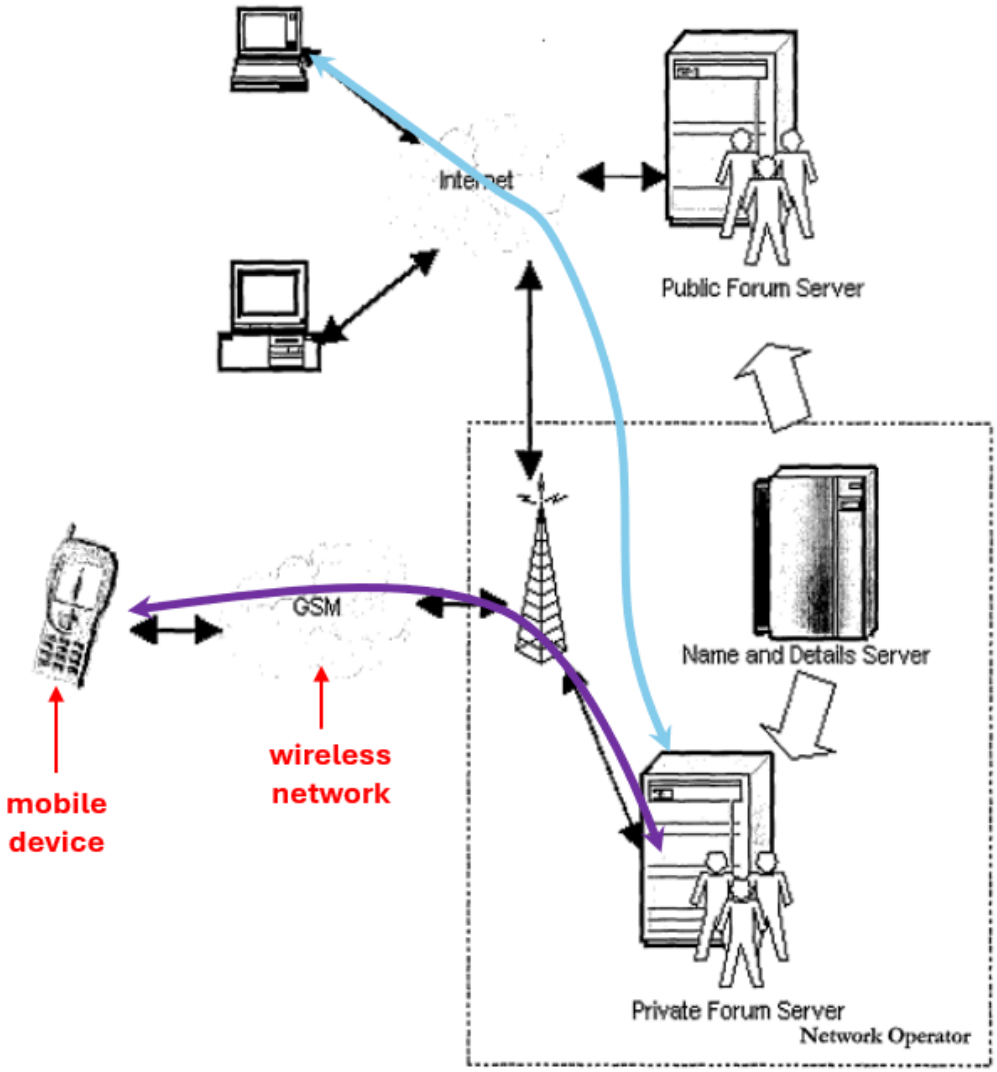

Symbian Forums—Randall, Figure 4

83. Both Randall and Forsyth disclose that the wireless information devices are "able to communicate in any manner over any kind of network, such as GSM or UMTS, CDMA and WCDMA mobile radio, Bluetooth, 802.11, [and] IrDa etc." (Forsyth, 1:16-25; *see* Randall, 1:11-13.) As shown in the above figure, wireless information devices access servers via a GSM wireless network (depicted with a

purple line) and non-wireless devices (e.g., fixed computers) access servers via the Internet (depicted with a blue line). This arrangement is confirmed by Randall which describes the use of "existing transports" (communication means) for client-server communication over these networks such as "WAP to access the services on the server side" from the wireless devices and "standard IP formats such as MIME, SMTP and HTTP" to "enable compatibility with Internet Messaging systems." (*See* Randall, 58:23-27.) In addition to WAP, Randall also discloses use of GSM-SMS for transport over the wireless network. (*See* Randall, 14:10-11 ("This form of data transfer could be via SMS or packet delivery in packet based systems."); *see also* (Randall, 1:11-13 ("It includes devices able to communicate in any manner over any kind of network, such as GSM …"); Figure 6.) I discussed WWW, WAP, and GSM-SMS in §§IV.A.c.(1)-(3) above. That is, the server includes a GSM interface (e.g., GSM/WAP or GSM-SMS) for communicating with mobile devices over the wireless network and a different interface (e.g., HTTP) for communicating with non-mobile devices over the Internet.

84. Thus, the Forums server in the combination of Randall and Forsyth "*provid[es] an interface*" and this interface "*permit[s] a first user to control activation of a mobile information channel*" as I discuss below.

(2) "mobile information channel"

85. As I discussed in §III.E, the term "*mobile information channel*" was proposed for construction in the MDT-Meta-Litigation and in the Meta-MDT-IPR. I reproduce these constructions again below. The combination of Randall and Forsyth discloses a "*mobile information channel*" under both constructions.

MDT-Meta-Litigation	
PO	plain and ordinary meaning; alternatively, "a medium for transferring information that allows mobile device users to author content"
Meta	"a virtual location at the content management site at which user-authored content may be added for transmission to the mobile web site"
Meta-MDT-IPR	
PO	"a component of a mobile site configured to permit a wide variety of mobile devices to send and receive content over a wireless network"
Meta	"a medium for transferring information that allows mobile device users to author content"

86. Within the Forums service, a user has the ability to create an individual Forum open only to members of a specified group (a Private Forum) or open to the public (a Public Forum). (Forsyth, Appendix 1, 13:60-18:18; Randall, 24:13-17.) Forums also provides the ability for the server to create a Forum based on criteria such as location of users. (*See* Forsyth, 13:29-52.) Randall describes that "a forum allows **several people** to be part of a '**channel**' or room, which is usually themed; for instance supporters of a football team may meet in a channel devoted to that team

to discuss the team." (Randall, 40:17-19; *see also* 82 ("Old Friends: A function that easily lets you create circles of friends you wouldn't normally keep in touch with – for example people you met on holiday, or at college etc." and "[y]ou simply create & name a group of people, which you can then text in 6 months or 6 years time"; "New circles of people: A function that lets you create circles of contacts of people with similar interests who you may never have met before, but have picked up their text details on a website where you share interests in common eg [sic] a particular sport or hobby"); Randall, 83 ("Text Mates: A service that lets a group of friends communicate at any time of the day via a chat site on their mobile phones").)

87. As I mentioned above, "Forums … **facilitates open discussion amongst a group and allows multiple chat-style conversations to take** place simultaneously." (Forsyth, 5:27-30.) Forsyth describes several examples of Forums being used to author and share content among members: Group Based Text Messaging (Scenario 1) describing authoring and sharing text messages (5:35-7:13), Discussion of Photos (Scenario 2) describing capturing and sharing photos (7:18-57), Social Scheduling (Scenario 3) describing authoring and sharing messages and capturing and sharing links (7:58-9:4), and Digital Memento from a User's Birthday (Scenario 4) describing authoring and sharing messages, and capturing and sharing photos, audio files, and documents (9:5-35).

88. Each individual Forum (and its supporting network infrastructure) is a "medium for transferring information that allows users to author content", meeting PO's MDT-Meta-Litigation construction and Meta's Meta-MDT-IPR construction. A Forum is also a "component of a mobile site [Forums running on the server] configured to permit a wide variety of mobile devices to send and receive content over a wireless network", meeting PO's Meta-MDT-IPR construction. The combination of Randall and Forsyth therefore discloses a "*mobile information channel through which [a] user can share access to content with a plurality of additional users*."

(3) "Permitting a First User to Control Activation" and "Activating" the mobile information channel

89. The Forums server permits "*a first user to control activation of a mobile information channel*" and to *"activat[e] the mobile information channel*" through a message sent when a Forum is created. Forsyth describes creation and activation of a Forum through its exemplary "Scenario 1–group-based text messaging." As shown in Figure 4 (below-right), the user is presented with a "new forum" screen on the user interface through which the user creates a Forum. As I discussed in §IV.A.1.c.(2), when WAP is used as the protocols between the mobile devices and server (as taught by Randall), this "new forum" interface screen is a webpage provided by the server and displayed via a microbrowser or a client-side Forums application supporting WAP. (*See* Park, 5:5-33 (describing WAP).) As shown, when

creating a Forum, the user "has to select whom he wishes to invite." (Forsyth, 5:50-51; Figure 3 (below-left).) As shown in Figure 3 of this scenario, the user selects Lucy and Steve as participants in the Forum, enters the Forum title ("Naked Chef"), and types in the initial message ("Jamie Oliver is a culinary god!!"). (Forsyth, 5:52-63.)

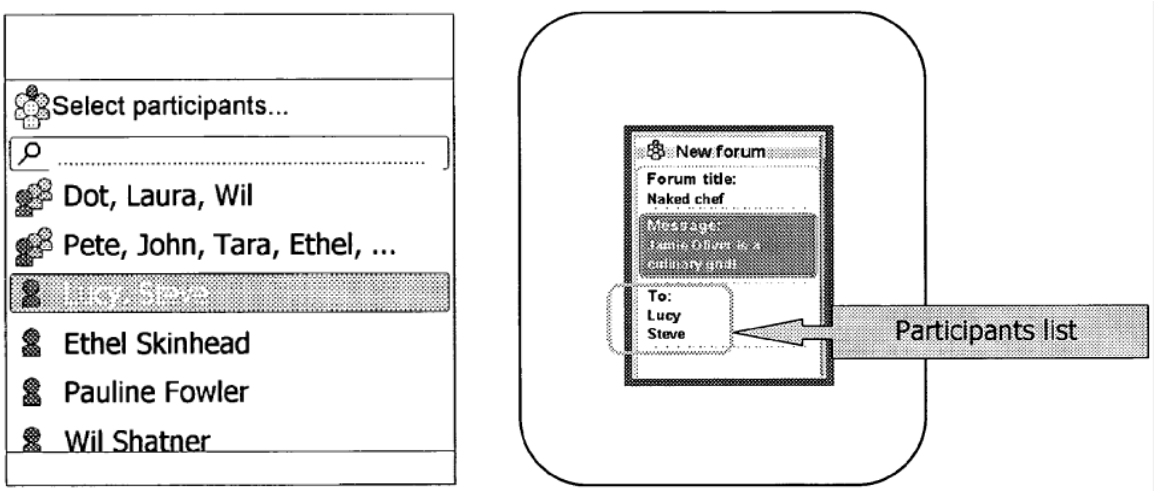

Symbian Forums—Forsyth, Figure 3 (left), Figure 4 (right)

90. As shown in the Figures above from Forsyth which depict the user interface displayed at the wireless information device, the Forum creator is "*a first user.*" (*See* Forsyth, 4:61-62 ("FIGS. 2-11 are screen shots of the display of a wireless information device running the Forums application.").) The identified participants, who will become forum members if they agree to participate in the Forum, are "*a plurality of additional users.*" After the Forum is created, members can send new messages "to the server, which then forwards on the increment [i.e.,

the new Forum content] to all the people on the current (server-maintained) address list." (Randall, 6:18-22.) That is, users author content and share access by posting/sending the content to Forum via the server.

91. After the creator selects participants, an initial message and the participant list are provided "to the message server" as a message/communication object and a group object respectively. (*See* Forsyth, 6:1-8.) The message/communication object is used to store the communication thread for the Forum. (Forsyth, 6:9-14.) The group object defines the Forum's members and is application independent, meaning that another application can use the object to define group membership. (Forsyth, 5:15-26.) The server "stores these two objects and forwards a copy of the message to each of the people on the address list, along with an abstracted version of the address list." (Forsyth, 6:9-14.) The invited participants can "decline to participate" and if so are then "removed from the address list on the server." (Forsyth, 6:15-17.)

92. Thus, in the combination of Randall and Forsyth, the server, through the Forums service, "*provide[s] an interface permitting a first user to control activation of a mobile channel*" [1A] by permitting the user to send a message and group address objects to the server to create a new Forum received through the server's wireless network (GSM) interface and/or providing the webpage (user interface) through which the user enters this information over WAP. The server

"*activat[es]*" the Forum upon receipt of the new Forum message object and group address object from the user. Specifically, the server handles inviting participants to the Forum and managing the group address list by, e.g., removing addresses of individuals that decline to participate. (*See, e.g.*, Forsyth, 6:9-17.) Thus, in the combination of Randall and Forsyth, the server "*activat[es] the mobile information channel response to input received from the first user via the interface*" [1B].

(4) "inserting content provided by the first user"

93. As I discussed above, when the "*first user*" sends an initial message (including content) "to the message server" as a message/communication object" (Forsyth, 6:1-8.) The server stores the message/communication object, which will act as the store for communications within the Forum, and "forwards a copy of the message to each of the people on the address list, along with an abstracted version of the address list." (Forsyth, 6:9-14, 4:18-24 (message can "be treated as a single communication object" and "[a]ll linked (e.g. threaded) communications, such as replies and comments, then become part of the same communication object and, like any object are treated as a discrete entity").) By forwarding the "*content provided by the first user*" to members of the Forum, the server is "*inserting content ... into the mobile information channel.*" This is highlighted in Forsyth's Figure 7 (below) which shows the initial message content from the first user in the listing of messages (content) shared within the Forum. Thus, in the combination of Randall and Forsyth,

the server "*insert[s] content provided by the first user into the mobile information channel*" [1C].

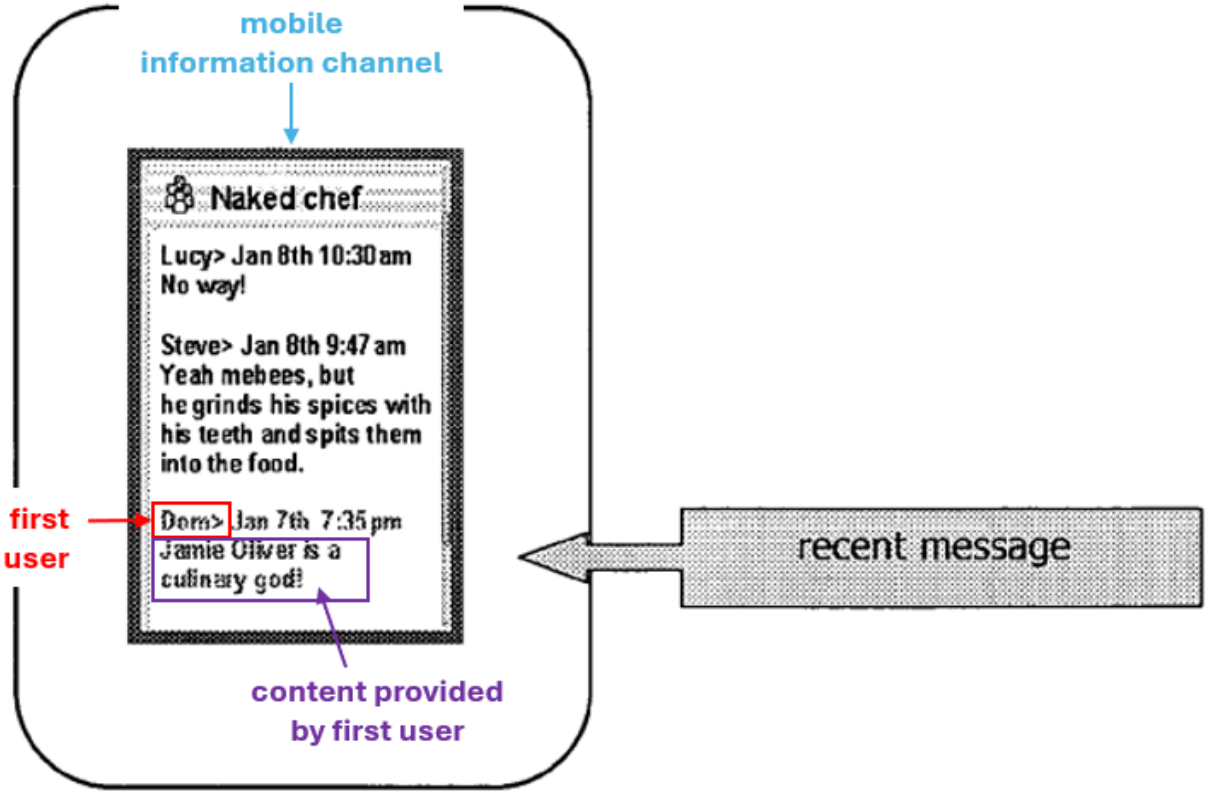

Symbian Forums—Forsyth, Figure 7

c) Limitations [1D]-[1E]

[1D] receiving additional content relating to the mobile information channel from one or more of said additional users via one or more respective mobile devices associated with at least one wireless network;
[1E] inserting at least a portion of the additional content into the mobile information channel

(1) "Receiving Additional Content" and "Inserting"

94. The combination of Randall and Forsyth discloses the server "*receiv[es] additional content relating to the mobile information channel from one or more of said additional users*" [1D] and "*insert[s] at least a portion of the additional content into the mobile information channel*" [1E].

95. Symbian Forums, described by Randall and Forsyth, is designed for interactive communication/discussion within a Forum. Specifically, Forums is a "group communication method for a wireless information device that enables communications to be **sent and received between several wireless information devices operated by end-use[r]s that form a group of end users**" (i.e., a Forum). (Forsyth, 1:64-2:1.) Each of the Scenarios presented by Forsyth illustrates that a mobile device receives content (messages, photos, graphics, music files, etc.) associated with a Forum ("*mobile information channel*") from other Forum members, i.e., from "*additional users*" of the Forum.

96. For example, in "group based text messaging" Scenario 1, "[i]f a user clicks on 'Forum reply'", in the screen shown in Figure 9 (below), "then a new message is posted to the Forum." (Forsyth, 6:54-55.) Because the messages are posted in the Forum and stored in the Forum's message/communication object, the new content "*relat[es] to the mobile information channel.*" (*See, e.g.,* Forsyth, 6:9-14, 4:18-24.) Such responses to the original message "are of the form that the new

message is sent to the server, which then forwards on the increment [new reply] to all the people on the current (server-maintained) address list." (Forsyth, 6:18-22.)

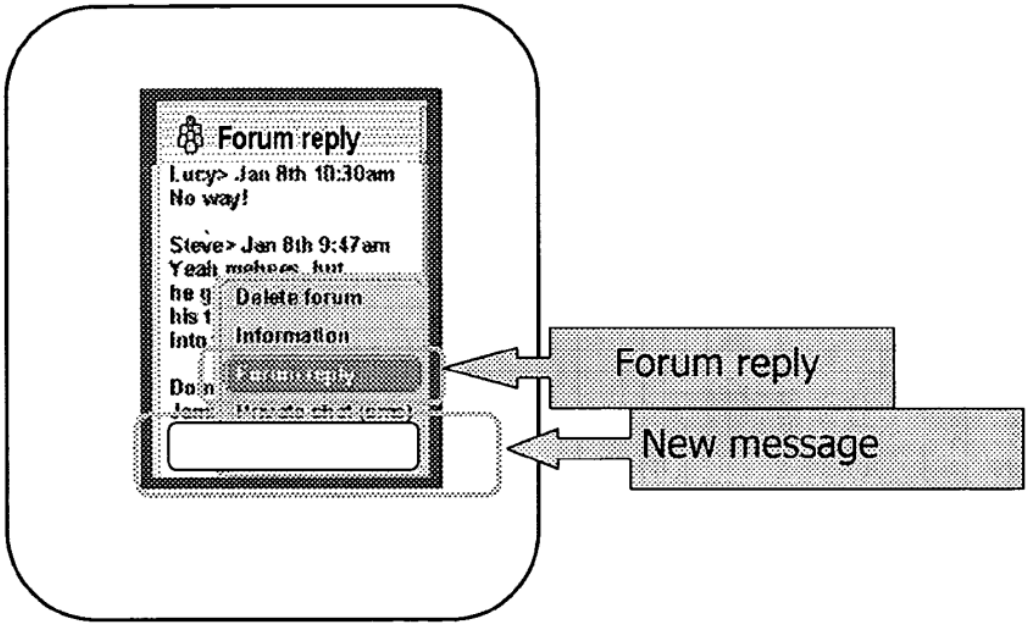

Symbian Forums—Forsyth, Figure 9

97. The new messages are the "*additional content relating to the mobile information channel from one or more of said additional users*" [1D] and as highlighted in Forsyth's Figure 7 below, this new "*additional content*" is "*insert[ed] … into the mobile information channel*" [1E] for delivery to Forum member devices.

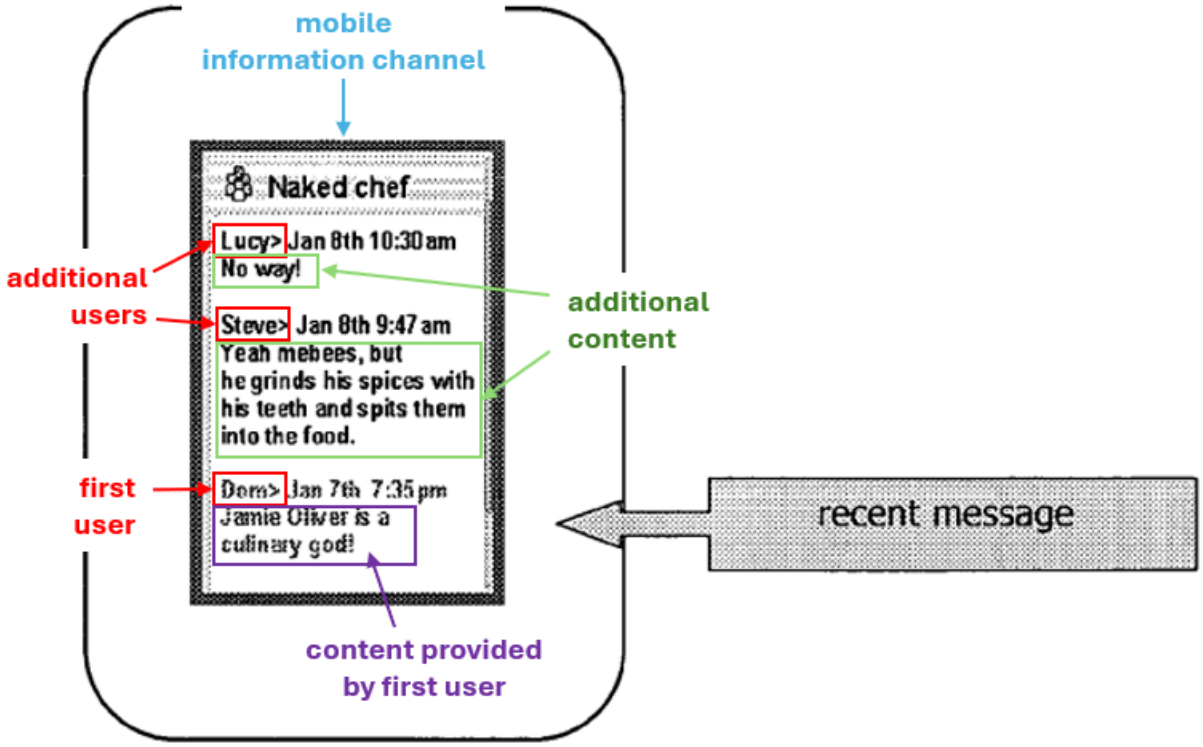

Symbian Forums—Forsyth, Figure 7

(2) "Mobile Devices Associated with at Least One Wireless Network"

98. The combination of Randall and Forsyth discloses that the "*additional content*" is received at the server "*via one or more respective wireless devices associated with at least one wireless network.*"

99. The Randall-Forsyth combination uses a client-server model, illustrated in Randall's Figure 4 (reproduced below), that includes wireless information devices and servers implementing network-based services, including Symbian Forums. (*See, e.g.,* Randall, 40:28-30.) Specifically, Randall "relates to the use of an open, universal data infrastructure for **wireless information devices** which can be used by

application developers to write new applications." (Randall, 3:10-13.) Forsyth "relates to a group communication method for a **wireless information device**." (Forsyth, 1:15-16.) Although Figure 4 only depicts a single wireless information device, a POSITA would have understood that multiple wireless information devices would be present in the Forums network, because Randall and Forsyth both discuss groups having multiple members and because, as I noted above, Forsyth teaches that content is "sent and receiver between **several** wireless information devices" in a group. (Forsyth, 1:64-2:1.)

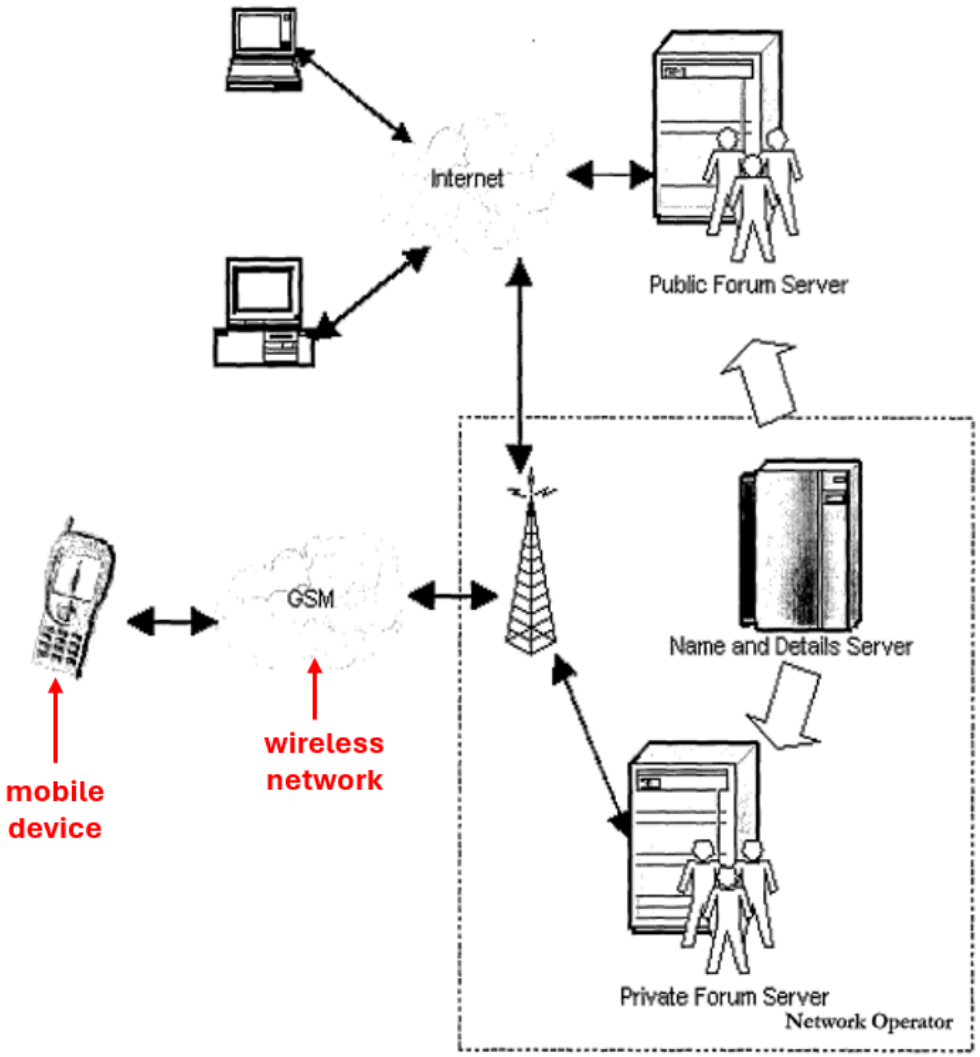

Symbian Forums—Randall, Figure 4

100. Randall and Forsyth both disclose that a wireless information device encompasses "any kind of device with one or two way wireless information capabilities [including] without limitation radio telephones, smart phones, communicators, personal computers, computers and application specific devices." (Randall, 1:7-11; Forsyth, 1:16-22 (same).) Each of these listed devices is portable and has a form factor allowing the device to be held in the hand (i.e., handheld).

Indeed, Forsyth refers to the devices as "mobile devices." (*See, e.g.,* Forsyth, 2:40-47 ("[a]n implementation of the present invention, called Forums™ … is designed specifically to allow current and very popular internet type services (e.g. chat/instant messaging between groups) to be handle[d] effectively between **mobile devices** and to enable a new generation of group based communication services.").)

101. Each of the wireless information devices enumerated by both Randall and Forsyth are also configured for "communicat[ion] in any manner over any kind of network, such as GSM or UMTS, CDMA and WCDMA mobile radio, Bluetooth", 802.11, and IrDa (infrared). (Randall, 1:11-13; Forsyth, 1:16-25.) Each listed network allow a device to communicate wireless over a network and is therefore a "*wireless network*" under Meta's Meta-MDT-IPR construction. As shown in Figure 4 above, in the wireless infrastructure supporting Forums mobile devices access the servers via the wireless network and non-mobile (fixed) computing devices (shown as traditional desktop computers) access the servers via the Internet. Thus, in the combination of Randall and Forsyth, the wireless network is depicted as separate and independent from the Internet. Each listed network is therefore a "*wireless network*" under PO's Meta-MDT-IPR construction as well. Thus, the wireless information devices are "*associated with at least one wireless network*."

102. The "wireless information devices" described by both Randall and Forsyth are each a "piece of handheld equipment" and therefore a "*mobile device*"

under PO's MDT-Meta-Litigation construction. These portable devices process information and are capable of being configured for communication over a network. Thus, the "wireless information devices" described by both Randall and Forsyth are each a "*mobile device*" under PO's MDT-Meta-Litigation and Meta-MDT-IPR constructions ("any type of portable information processing device capable of being configured for communication over a network").

103. Exemplary mobile devices described by Randall and Forsyth (e.g., radio telephones, smartphones, and communicators) have limited display space and/or limited navigational capabilities. For example, as shown in Forsyth's Figure 2 (below-left), the device has limited display space. (*See* Forsyth, 4:61-62; Randall, 45:23-25 ("Unfortunately, the current architecture of the Internet is not well suited for the wireless device form factor, providing an inappropriate user experience (the browser/page metaphor) for mobile devices with small displays.").) And as shown in Forsyth's Figure 6 (right), the user can navigate to only the listed forums—i.e., the mobile device has limited navigational capabilities. Thus, the "wireless information devices" described by both Randall and Forsyth are each a "*mobile device*" under PO's Meta-MDT-IPR construction ("a portable device with limited display space and limited navigational capabilities that connects to a mobile site and/or mobile channel via a wireless network").

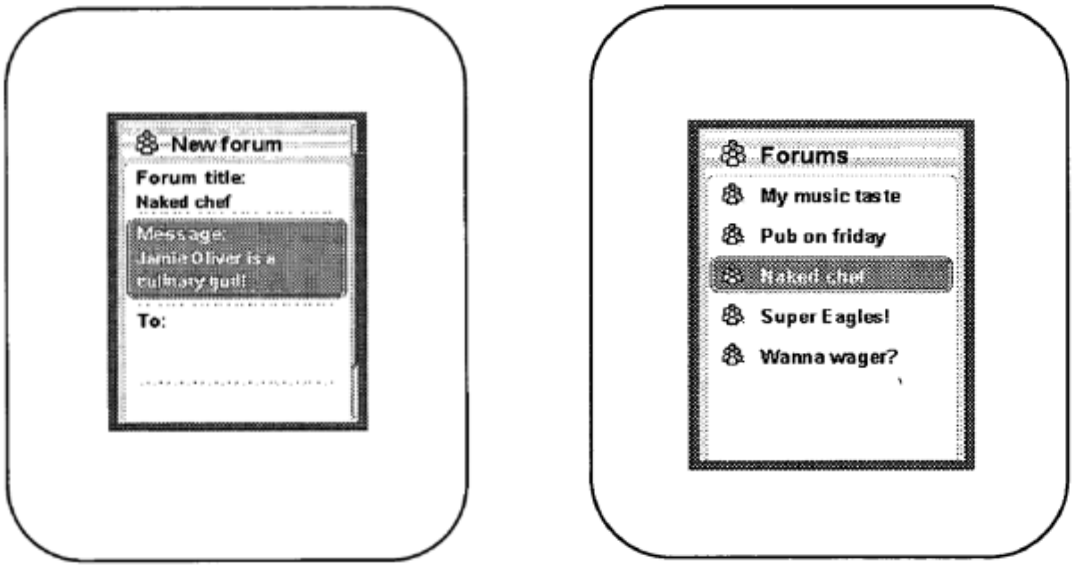

Symbian Forums—Forsyth, Figure 2 (left), Figure 6 (right)

104. Thus, the combination of Randall and Forsyth discloses "*one or more mobile devices associated with at least one wireless network*" and therefore discloses "*receiving additional content ... via one or more respective mobile devices associated with at least one wireless network*" [1D].

105. Numerous books and papers published prior to June 2002 (or in 2002) confirm the disclosures of Randall and Forsyth regarding wireless devices running the Symbian OS. In addition, the Symbian website available prior to June 2002 included a technology section providing papers, links to books, and other information discussion Symbian devices and client-server infrastructure supporting services/applications. (*See, e.g.*, EX-1018.) A POSITA would have been aware of the existing Symbian wireless information devices as well as the reference designs for Symbian devices made publicly available by Symbian. In this section, I primarily

cite to "Wireless Java for Symbian Devices" by Allin ("Allin"; EX-1012) published in August 2001 by Symbian Press and "Symbian OS Communications Programming" by Jipping ("Jipping"; EX-1050) published in June 2002 by Symbian Press for additional supporting evidence. Although other documents pre-dating the '801 patent are equally applicable.

106. The Symbian OS, available prior to 2002, was intended for a range of devices. (Allin, 229; Jipping, 11.) Symbian developed three reference designs for its licensees divided into (1) "[s]martphones, primarily for voice communication, with PDA-like sophistication that allow[] information to be rapidly accessed and reviewed" and (2) "[c]ommunicators with a PDA's form-factor and fully-integrated communications including voice." (Allin, 4.) Communicators included two Symbian reference designs, code-named Crystal and Quartz. (Allin, 4.)

107. Allin's Figure 3 below illustrates the Nokia 9210 Communicator based on the Crystal communicator reference design. (*See* Allin, 5.) The Nokia Communicator uses a 32-bit ARM9-based RISC CPU processor and has 2MB RAM plus 16MB RAM (MultiMediaCard). (Allin, 458-459.)

Allin, Figure 3

108. The Ericsson Communicator concept, illustrated in Allin's Figure 4 (below) is based on Symbian's Quartz communicator reference design. "Quartz is a pen-based tablet device with integrated telephony." (Allin, 4.)

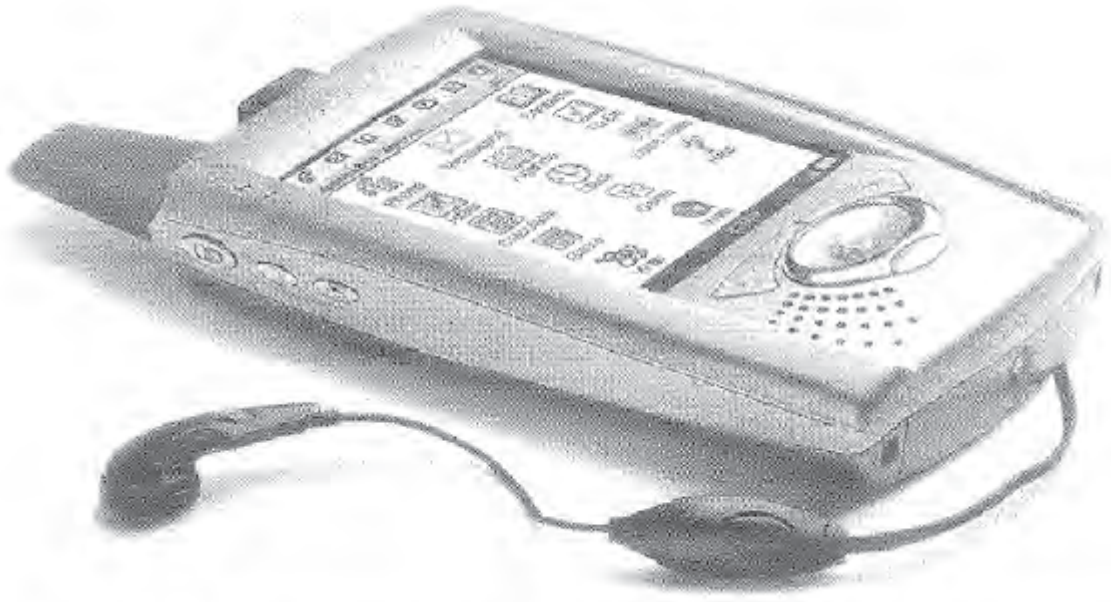

Allin, Figure 4

109. Symbian's smartphone reference design is illustrated in Allin's Figure 5 below. The smartphone design "puts browsing content, messaging, and access to entertainment in the forefront and other information management as a secondary goal." (Jipping, 12.) The Nokia 7650, an example product following this design, included an integrated digital camera and was optimized for picture taking and sending, multimedia messaging, SMS, and email. (*See, e.g.,* EX-1019.).)

Allin, Figure 5

110. Table 7.1 of Allin summarizes "the principal characteristics of Symbian devices" including screen size, memory, processor, and type of input (e.g., keyboard and/or pen). (Allin, 229.)

Table 7.1 Principal characteristics of Symbian EPOC Release 5 devices

	Revo Plus	5MX	MC218	netBook	netPad
Manufacturer	Psion	Psion	Ericsson	Psion	Psion
Format	Shirt pocket	Pocket, brief case	Pocket, brief case	Small laptop	Tablet
Screen	480 × 160, mono	640 × 240, mono	640 × 240, mono	640 × 480, color	640 × 240, color
Memory	16 MB	16 MB	16 MB	48 MB	–
Processor	36 MHz ARM 710T	36 MHz ARM 710T	36 MHz ARM 710T	190 MHz StrongArm	190 MHz StrongArm
Java	JDK1.1	JDK1.1	JDK1.1	JDK1.1	PersonalJava
Input	Keyboard, pen	Keyboard, pen	Keyboard, pen	Keyboard, pen	Pen

Allin, Table 7.1

d) "Integrating" Limitation [1F]

[1F] integrating into the mobile information channel information associated with at least one wireless networking functionality of said at least one wireless network.

111. The combination of Randall and Forsyth discloses "*integrating into the mobile information channel information associated with at least one wireless networking functionality of said at least one wireless network.*" I first discuss the "*wireless network functionality*" portion of the limitation and then describe how the combination integrates that information into the "*mobile information channel.*"

(1) Information Associated with a Wireless Networking Functionality

112. The "*wireless network*" in the Randall-Forsyth combination supports "*at least one wireless networking functionality*[5]."

113. The '801 patent refers to "messaging, distributed collaboration, and location-based services" as examples of "wireless networking functionality." (EX-1001, 1:34-39; 1:54-58 ("integration of messaging, collaboration, location-based services or other wireless networking functionality with the generation of shared information content").) The '801 patent also mentions that the "services integration suite 38 includes an MMS center 70, an SMS center 71, email systems 72, billing systems 73, voice systems 74, and other systems 75, each of which may be viewed

---

[5] While neither Meta nor PO proposed a construction for this term in their proceedings related to the '801 patent, the parties did propose constructions for this term in at least one other IPR, *Meta Platforms v. Mobile Data Tech.,* IPR2024-00248, challenging the '039 patent. (*See* EX-1030, 16-17.) In that proceeding, PO contends the term means "functionality implementable by a mobile device via a wireless network independent of the Internet," (EX-1030, 16), whereas Meta contends the construction should be "functionality implementable over a wireless network," (EX-1031, 5). No construction is required here because the combination meets the limitation under either construction.

as **representative of a particular type of wireless networking functionality** accessible to the mobile devices 15 via the wireless network 12." (EX-1001, 9:48-53.) That is, according to the '801 patent, messaging (MMS, SMS, email), voice calling, and billing are examples of wireless networking functionality.

114. Forums uses a client/server model with a program component running on a wireless information device (e.g., a local application or microbrowser) which communicates over the wireless network to a program component on the server, as illustrated in Forsyth's Figure 4 (reproduced below). As I discussed in §IV.A.1 Randall and Forsyth teach that the wireless network may be a GSM network (as shown in Figure 4) with the communication protocol means being either GSM-SMS or WAP. (See, e.g., Randall, 1:11-13 (wireless devices "communicate in any manner over any kind of network, such as GSM or UMTS, CDMA and WCDMA mobile radio, Bluetooth, [802.11,] IrDA [(infared)] etc."); Forsyth, 1:22-24 (same).) As shown in Figure 4 below, in the wireless infrastructure supporting Forums mobile devices access the servers via the wireless network and non-mobile (fixed) computing devices (shown as traditional desktop computers) access the servers via

the Internet.

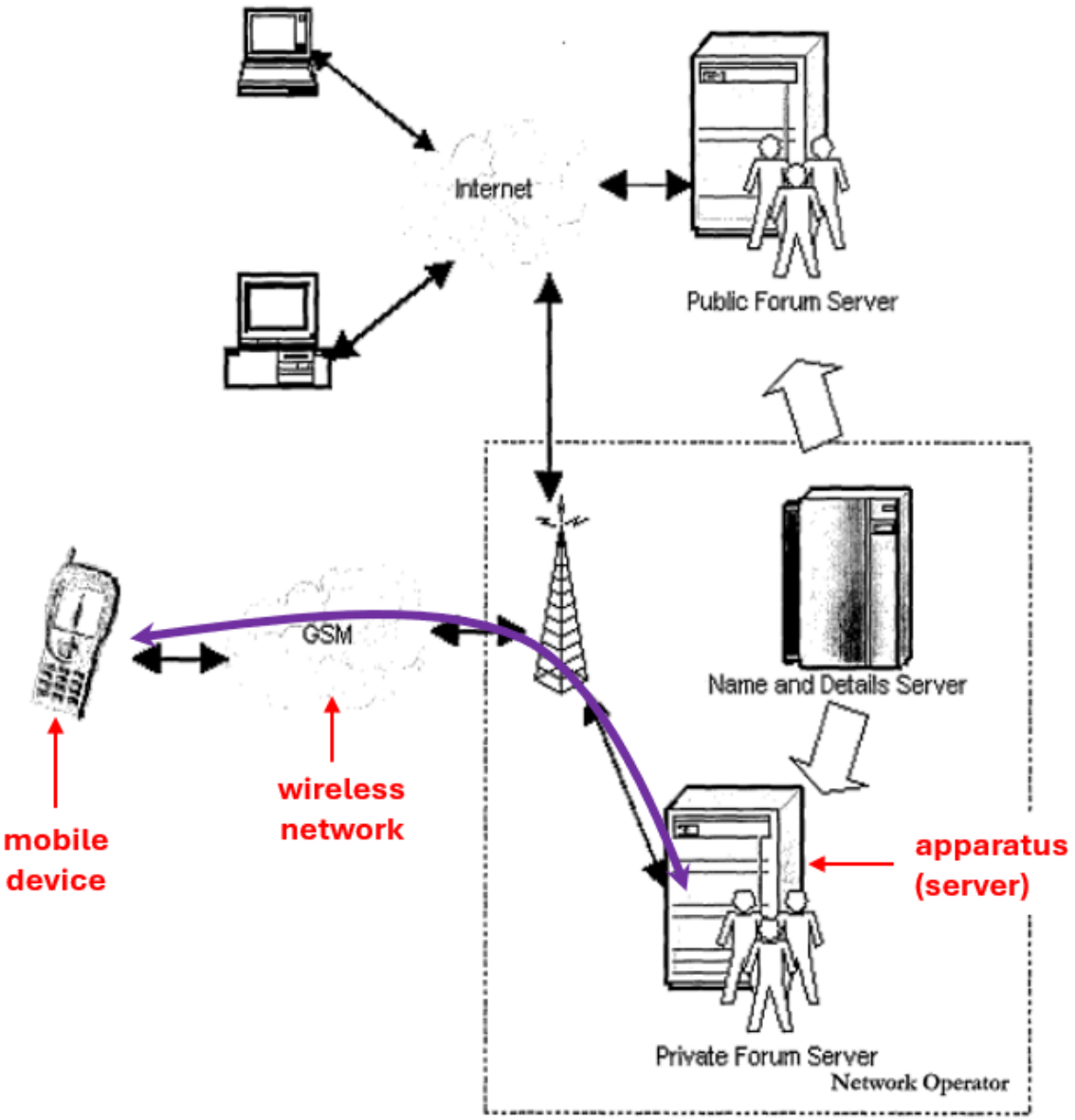

Symbian Forums—Forsyth, Figure 4

115. The combination of Randall and Forsyth discloses "*information associated*" with a functionality implementable over a wireless network by a mobile device (e.g., via WAP or via GSM-SMS). The '801 patent includes several

dependent claims directed to the "***information*** *associated with said at least one wireless networking functionality of the mobile device.*" Claim 7 specifies the information is a "*messaging action*" and claim 8 specifies the information is a "*collaboration action.*" Because of the overlap in subject matter, I address limitations [1F] and claims 7-8 together in this section.

a) Messaging

116. As I noted above, the '801 patent lists messaging (MMS, SMS, email) as an example of a "*wireless networking functionality*." (*See, e.g.,* EX-1001, 7:42-44.) Claim 7 (reproduced below) which depends from claim 1 recites the information of limitation [1F] comprises "*one or more messaging actions*."

> [1F] integrating into the mobile information channel **information** associated with at least one wireless networking functionality of said at least one wireless network
>
> 7. The method of claim 1 wherein **the information** associated with at least one **wireless networking functionality** of said at least one wireless network comprises **one or more messaging actions** implementable over the wireless network.

117. The "*wireless network*" and wireless devices in the combination of Randall and Forsyth implement "*at least one wireless networking functionality of said at least one wireless network*"—messaging. For example, Forsyth describes that Forums supports "group based text messaging" and "group based multi-media messaging." (Forsyth, 3:35-58, 5:45-49.)

118. The scenarios and examples provided by Randall and Forsyth demonstrate a "*messaging action*" initiated by the user—e.g., the posting/sending of a message to the Forum. For example, in the "group based text messaging" (Scenario 1) of Forsyth, when the "Naked Chef" Forum is created, the user sends an initial message to the message server. (*See* Forsyth, 6:1-9.) Subsequent responses "are of the form that the new **message is sent to the server**." (Forsyth, 6:18-22.) Similarly, "Discussion of Photos" (Scenario 2) describes "creat[ing] a Forum **message** based on the photograph." (Forsyth, 7:35-36.) Other scenarios similarly discuss use of messaging/messages to interact with members within a Forum.

119. These scenarios/examples also demonstrate the "*information associated*" with the "*wireless networking functionality*" of messaging. Specifically, when a device captures a user's content, the mobile device creates a Forums message by bundling the sender (i.e., identity of the user in the Forum (e.g., Steve)) and the Forum name (e.g., Naked Chef), with the user supplied content—text, image, etc. (e.g., "Yeah mebees but he grinds his spices with his teeth and spits them into the food"). I illustrate an exemplary Forums message below.

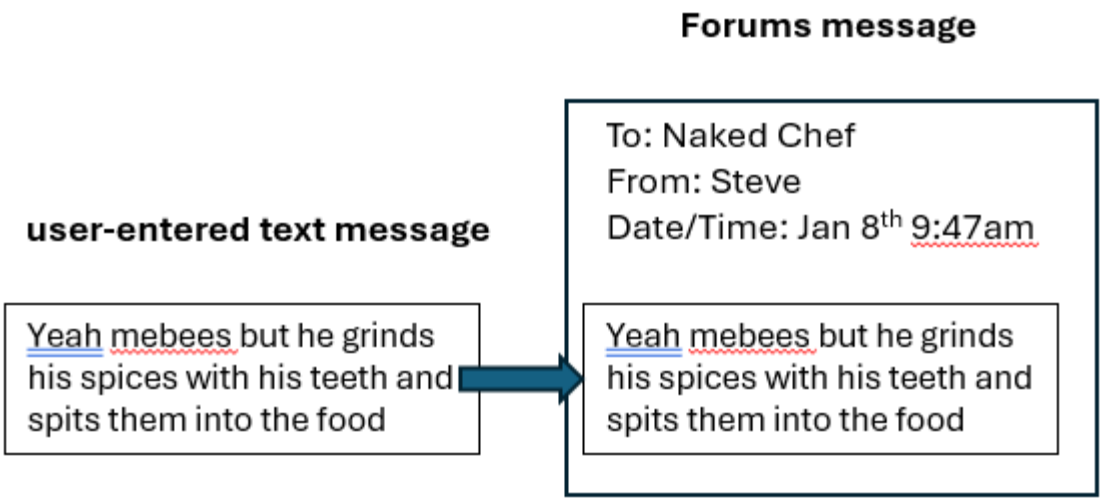

Houh, Figure A

120. The mobile device must also encapsulate the generated Forums message into a protocol message to be transmitted by over wireless network, as I illustrate in my Figure B below. The protocol message includes information associated with the action of sending a message that must be determined by the mobile device. The specific information included in the protocol message is dependent on the protocol used by the communication means (e.g., GSM-SMS or WAP). As I noted in §IV.A.1.c, neither Randall nor Forsyth provides the details of the wireless messaging functionality of GSM-SMS or WAP. These details were specified by standards governing the wireless network and would have been well-known to and within the general knowledge of a POSITA. I provide a high-level overview of the protocol message used for GSM-SMS and WAP below.

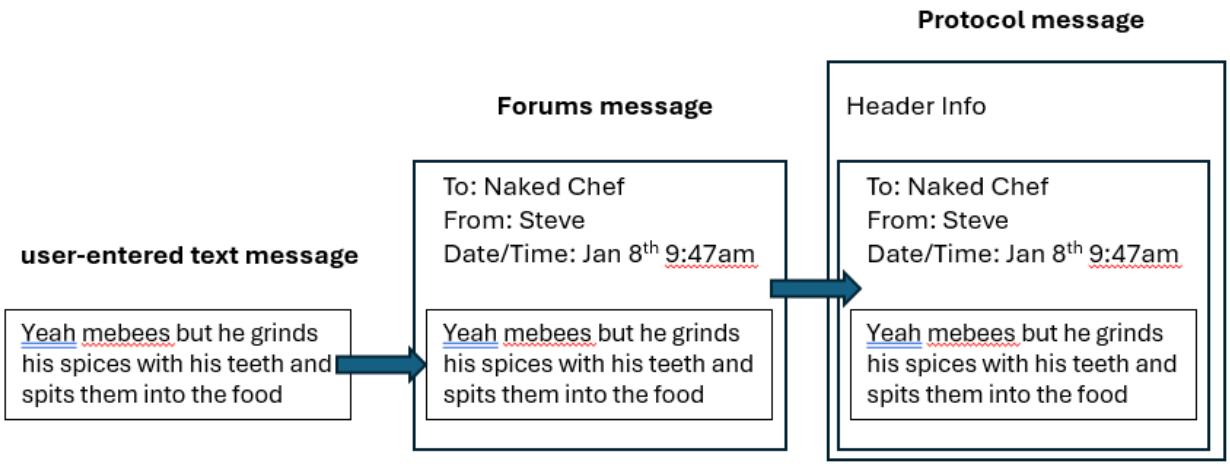

Houh, Figure B

1) GSM-SMS

121. The specification for GSM-SMS is set forth in the "ETSI TS 123 040: Technical realization of short message service (SMS)" ("GSM SMS Standard"; EX-1015.) I refer to version 3.6.0 of this standard released in September 2001 in this section. In SMS messaging, a mobile station can either send messages (referred to as mobile originating) or receive messages (referred to as mobile terminating). As I discussed above, the sending of a message device is a "*messaging action.*"

122. When originating a GSM-SMS message, the mobile station creates a protocol message, referred to as an SMS-Submit protocol data unit ("PDU"), illustrated below. (EX-1015, 42-43.) At a high level, the SMS-Submit protocol has header fields including information identifying the type of message (i.e., a SMS-Submit message) and a user data field which may also includes a header along with the Forums message I discussed above. (EX-1015, 60.) The user data field header

includes information indicating content type of the short message (e.g., text, animation, small, large picture, etc.). (EX-1015, 63.) These protocol fields are associated with the action of sending a message over the wireless network and are therefore also "*information*" associated with messaging.

Abbr.	Reference	p1)	p2)	Description
TP-MTI	TP-Message-Type-Indicator	M	2b	Parameter describing the message type.
TP-RD	TP-Reject-Duplicates	M	b	Parameter indicating whether or not the SC shall accept an SMS-SUBMIT for an SM still held in the SC which has the same TP-MR and the same TP-DA as a previously submitted SM from the same OA
TP-VPF	TP-Validity-Period-Format	M	2b	Parameter indicating whether or not the TP-VP field is present.
TP-RP	TP-Reply-Path	M	b	Parameter indicating the request for Reply Path.
TP-UDHI	TP-User-Data-Header-Indicator	O	b	Parameter indicating that the TP-UD field contains a Header.
TP-SRR	TP-Status-Report-Request	O	b	Parameter indicating if the MS is requesting a status report.
TP-MR	TP-Message-Reference	M	I	Parameter identifying the SMS-SUBMIT.
TP-DA	TP-Destination-Address	M	2-12o	Address of the destination SME.
TP-PID	TP-Protocol-Identifier	M	o	Parameter identifying the above layer protocol, if any.
TP-DCS	TP-Data-Coding-Scheme	M	o	Parameter identifying the coding scheme within the TP-User-Data.
TP-VP	TP-Validity-Period	O	o/7o	Parameter identifying the time from where the message is no longer valid.
TP-UDL	TP-User-Data-Length	M	I	Parameter indicating the length of the TP-User-Data field to follow.
TP-UD	TP-User-Data	O	3)	

GSM SMS Standard, 43

2) WAP Messaging

123. As I discussed in §IV.A.1.c.(2), WAP uses GSM-SMS as a bearer (transport). And as specified in the WDP specification, the User Data Header (UDH) for WAP over GSM-SMS is the "User Data Header (UDH) framework as defined in [GSM0340]" which I discussed above. (WDP, 38.) Thus, the messages transmitted

via WAP will include the same additional information that I discussed above. I note that the WAP session protocol (WSP) and data protocol (WDP) may include additional header information that would also be determined by a mobile device when generating the WAP message.

b) Collaboration

124. As I noted above, the '801 patent lists collaboration as an example of a "*wireless networking functionality*." (EX-1001, 1:36-39, 1:54-58.) Claim 8 which depends from claim 1 recites the information comprises "*one or more collaboration actions implementable over the wireless network*."

[1F] integrating into the mobile information channel **information** associated with at least one wireless networking functionality of said at least one wireless network
8. The method of claim 1 wherein **the information** associated with at least one **wireless networking functionality** of said at least one wireless network comprises one or more **collaboration actions** implementable over the wireless network.

125. Individual Forums are designed to allow members to communicate and collaborate on topics of interest, *e.g.*, by allowing each group member to post or send messages and/or photos, and respond to the messages and/or photos posted or sent by other group members. (Forsyth, 11:32-34 (discussing "Collaborative Activity").) Forsyth recognizes that "groups go and do things." (Forsyth, 11:34-35.) For example, a Forum can be as simple as collaborating to "see[] who is there to play a

game" or individual Forums can be "dedicated to particular games/game areas." (Forsyth, 11:37-39.)

126. Forsyth's "Social Scheduling" Scenario 3 provides a specific example of "*collaboration actions*" where a user in the group poses a question and members of the group collaborate to provide an answer. In this Scenario, a user "creates a new Forum titled 'Anyone fancy a trip to the cinema next week some time?'" (Forsyth, 8:44-46.) The user specifies individuals to include in the group. The central server "handles contacting each group member and handles also storing the message thread relating to this subject." (Forsyth, 8:48-52.) The group members discuss (collaborate on) "which night to go on perhaps using some simple control to indicate their preferred days, which is then reflected in a diagram showing the aggregate), which actual cinema to use, and which film to see." (Forsyth, 8:56-60.) The Forum also "has links to trailers, reviews and schedules etc. for each film … which are all used to inform the discussion." (Forsyth, 8:60-64.) The discussion among the group members is via the exchange of messages via a messaging functionality, which is a "*wireless networking functionality.*"

127. I described the information associated with the wireless messaging that specifies the collaboration actions (messaging among Forum members to solve, e.g., the scheduling details for a cinema visit) above.

(2) "Integrating … information associated with" a "wireless networking functionality"

128. The content and the information associated with a wireless networking functionality are provided to the server and inserted into the "*mobile information channel.*" Forums achieves this integration in part through use of a single communication object associated with a Forum. (Forsyth, 4:19-20; see also 4:20-26, 7:6-8.) Forsyth discloses that when a Forum is created using a group object to define the recipient, the original message posted to the Forum is "treated as a single 'communication object.'" (Forsyth, 4:19-20.) "All linked (e.g. threaded) communications, such as replies and comments, then become part of the same communication object and, like any object are treated as a discrete entity." (Forsyth, 4:20-24.) "Hence, the entire communication object can be sent to a new person, or be archived etc." (Forsyth, 4:25-26; *see* Forsyth, 7:6-8 ("The contents of a Forum can be forwarded-on, for example, to contacts who are not participating in the Forum, or to the Jotter application.").)

129. Forsyth describes an exemplary use of "communication objects" in the "group based text messaging" Scenario (Scenario 1). In this Scenario, a communication object includes the initial message. When new messages are sent to the server, the server "forwards the increment to all the people on the current (server-maintained) address list. (Forsyth, 6:1-22.) As discussed above, the sender name and

Forum name are included in the Forums message encapsulated in the protocol message. (Forsyth, 6:36-40.)

130. Within the Forum (e.g., Naked Chef), "the user is shown the messages posted to that Forum", as shown in Forsyth's Figure 7 below. (Forsyth, 6:38-40.) "Messages appear in date order, i.e. newest messages appear at the bottom." (Forsyth, 6:40-42.) As shown in Figure 7, the captured content (message; "No way!") and at least a portion of the information (poster name (e.g., Lucy and Jan 8th 10:30 am) is integrated "*into the mobile information channel*."

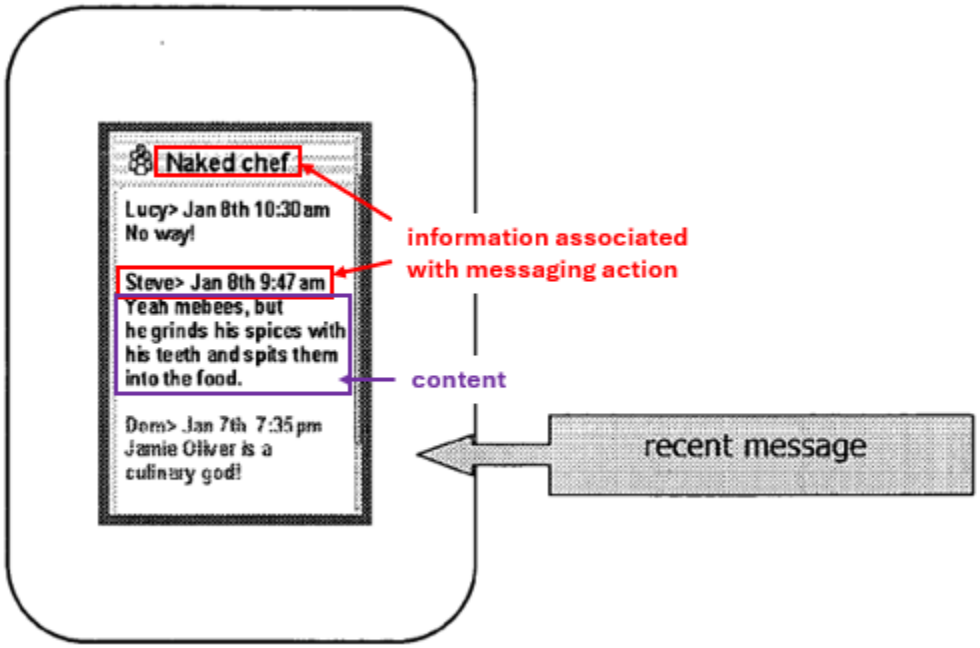

Symbian Forums—Forsyth, Figure 7

131. Thus, the combination of Randall and Forsyth discloses "*integrating into the mobile information channel information associated with at least one*

wireless networking functionality of said at least one wireless network" [1F]. The combination further teaches that the "*information associated with*" the "*wireless networking functionality*" comprises "*one or more messaging actions implementable over the wireless network* [e.g., sending a message]" [7] and "*one or more collaboration actions* [e.g., exchanging messages to answer a question/solve a problem] *implementable over the wireless network*" [8].

2. Independent Claim 22

> 22. A non-transitory computer-readable storage medium having embodied therein executable code of one or more software programs for use in managing information content in a network-based communication system, wherein said executable program code when executed by a processing element of the communication system implements the steps of the method of claim 1.

132. Both Randall and Forsyth disclose that the server performs processing and therefore has a server-side program component of Forums. For example, Forsyth explains the server "handles **contacting each group member**, storing messages, **allowing message to be read, sending, receiving and distributing messages**." (Forsyth, 3:28-31.) And Randall specifically mentions "server side software" (Randall, 57:4) and "server side message handling **applications**" (Randall, 38:24). Although not explicit, a POSITA would have understood from these disclosures that the server-side Forums program is "*executable code of one or more software programs*" which "*when executed by a processing element of the communication system*" implements the steps of the method specified in claim 1.

133. Neither Randall nor Forsyth explicitly states that the server-side program is stored of a "*non-transitory computer-readable storage medium*." Memory or another similar computer readable medium storing the software to be executed on the processor would necessarily be included in the mobile device, as I discussed above for the mobile device. (*See* Silberschatz, 29-30, 37.)

134. To the extent this is not deemed to be inherent in a computing device running software, it would have been obvious to a POSITA and well within the POSITA's general knowledge. I provide several examples of servers having a "*computer-readable storage medium*" below.

135. **U.S. Patent 7,802,207 to Agboatwalla et al. ("Agboatwalla"; EX-1024):** Agboatwalla describes a "computer program product" used to perform the function of "generating a customizable network user interface." (Agboatwalla, 3:7-9.) Its "computer program product" is "embodied on a computer readable medium" and comprises "computer code." (*See* Agboatwalla, 42:1-38.)

136. **U.S. Patent 7,574,486 to Cheng et al. ("Cheng"; EX-1025):** Cheng describes a "method, and computer readable medium [at a proxy server] for reformatting web content into a format readable on one or more mobile device." (Cheng, Abstract.) Cheng explicitly discloses "sets of instructions resident" in RAM that "[u]ntil required by the computer system, the set of instructions may be stored in another computer readable memory." (Cheng, 23:63-24:1.)

137. **U.S. Patent 6,788,949 to Bansal ("Bansal"; EX-1023):** Bansal teaches the memory in a server "can be coupled to a processor 5200 and can store instructions 5400 adapted to be executed by processor 5200." (Bansal, 7:23-26, 7:3-4 ("one or more memories 5300 contain[s] instructions"), Figure 5.) These instructions "can be embodied in software, which can take any of numerous forms that are well known in the art." (Bansal, 7:32-34.)

138. Additionally, Pelkey and Eck which I discuss in Ground 2 discloses a server having a CPU, memory, and network interface. (*See, e.g.,* Eck, 3:46-47; Pelkey, 5:7-14.)

3. Independent Claim 23

a) Preamble [23P]: "apparatus"

139. The combination of Randall and Forsyth discloses a server which is an "*apparatus*" [23P]. As illustrated in Randall's Figure 4, the Forums network infrastructure includes a server hosting Forums, such as Private Forums. In Forums, the server "handles contacting each group member, storing messages, allowing message to be read, sending, receiving and distributing messages." (Forsyth, 3:28-31, 3:31-33 ("The central server can also act as a store for resources which group-members may wish to discuss and share (e.g. personal information, personal photographs, music, web sites etc).").)

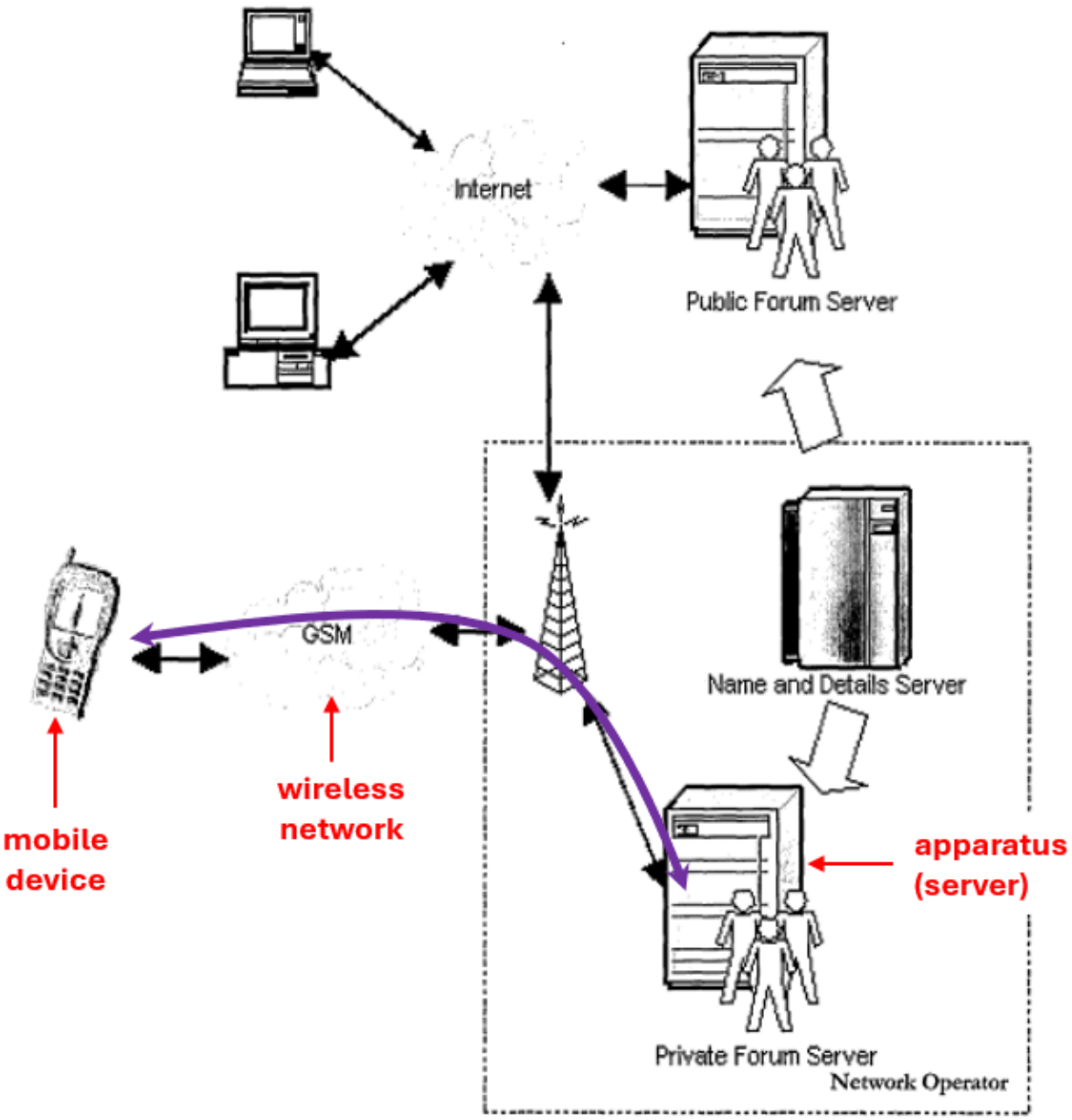

Symbian Forums—Randall, Figure 4

b) Server Architecture Limitation [23A]

[23A] a processing element comprising a processor coupled to a memory;

140. "Apparatus" claim 23 further includes limitation [23A] which recites the high-level architecture of the "*apparatus.*" Neither Randall nor Forsyth explicitly disclose the architecture of the server. However, it would have been obvious to a POSITA that an "*apparatus*" (server) includes "*a processing element comprising a processor coupled to a memory*" based on the teachings of Randall and Forsyth and general knowledge of a POSITA.

141. The '801 patent provides a high level "implementation" of an information processing element, shown in Figure 1B, applicable to mobile devices, servers, and user terminals. (EX-1001, 4:60-64.) The implementation has only three components—a processor 22, a memory 24, and a network interface 25 which "provides an interface to the wireless network 12 or Internet 14." (EX-1001, 4:60-5:10.)

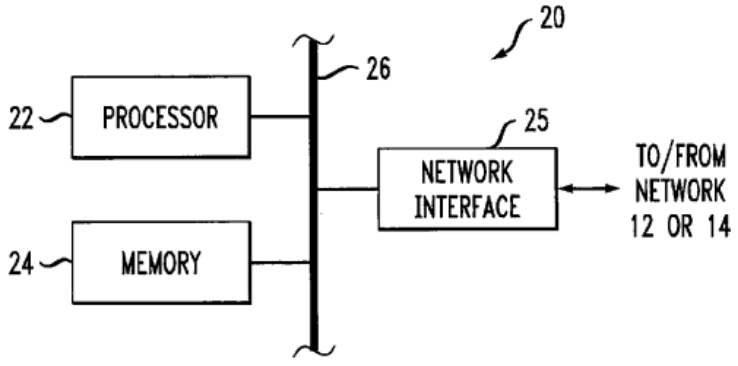

'801 Patent, Figure 1B

142. Both Randall and Forsyth describe that the server performs processing actions and therefore has a "*processing element*." For example, Forsyth explains the server "handles **contacting each group member**, storing messages, **allowing message to be read, sending, receiving and distributing messages**." (Forsyth, 3:28-31.) And Randall specifically mentions "server side software" (Randall, 57:4) and "server side message handling **applications**" (Randall, 38:24). A POSITA would have understood that software and applications execute on "*a processor*" within the "*processing element.*" The server acts as "a store for resources which group-members may wish to discuss and share (e.g., personal information, personal photographs, music, web sites, etc)." (Forsyth, 3:31-34.) The storage at the server is "*memory.*" (*See, e.g.,* EX-1001, 4:60-63 (memory includes "any other type of storage device").

143. Should PO contend "*memory*" of the "*processing element*" must store instructions executed by the processor, such memory would have been obvious, if not inherent in Randall and Forsyth which both teach software running on the server. Because the software/applications executing on a processor are stored in memory and also access information stored locally in memory, a POSITA would have understood Randall and Forsyth further disclose or suggest the "*processor* [is] *coupled to a memory.*"

144. Moreover, it would have been within the general knowledge of a POSITA that a server includes "*a processor coupled to a memory.*" As I discussed in §III.B a POSITA has a "bachelor's degree in electrical engineering, computer science, or similar field, with two years of experience in developing and implementing network-based computer systems that interact with mobile devices, such as systems for storing and retrieving information over the Internet or communicating using the Web using wireless mobile devices." The high level design of a processing element shown in the '801 patent would have been well-known to such an individual. I provide a sampling of examples below.

145. **U.S. Patent 7,802,207 to Agboatwalla et al. ("Agboatwalla"; EX-1024):** Agboatwalla discloses a "typical hardware configuration" of a workstation. (Agboatwalla, 5:40-42.) The configuration includes CPU 110, RAM 114, ROM 116 and "communication adapter 134 for connecting the workstation to a communication network." (Agboatwalla, 5:45-55.)

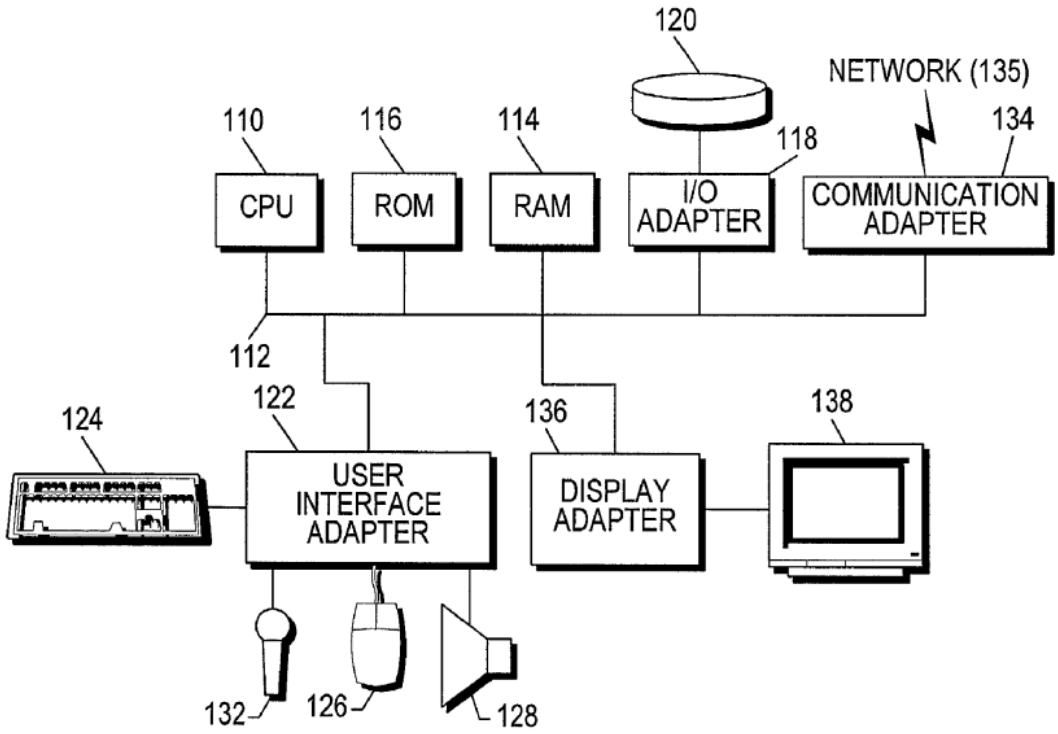

Agboatwalla, Figure 1

146. **U.S. Patent 7,574,486 to Cheng et al. ("Cheng"; EX-1025):** Cheng discloses "a block diagram of the internal hardware of [a] computer system", illustrated in Figure 12 (below). (Cheng, 23:26-27.) The computer system includes a CPU 1204, ROM 1206, RAM 1208, and a communications port 1216 for communications with a transport medium such as wireless communication network. (Cheng, 23:29-51.)

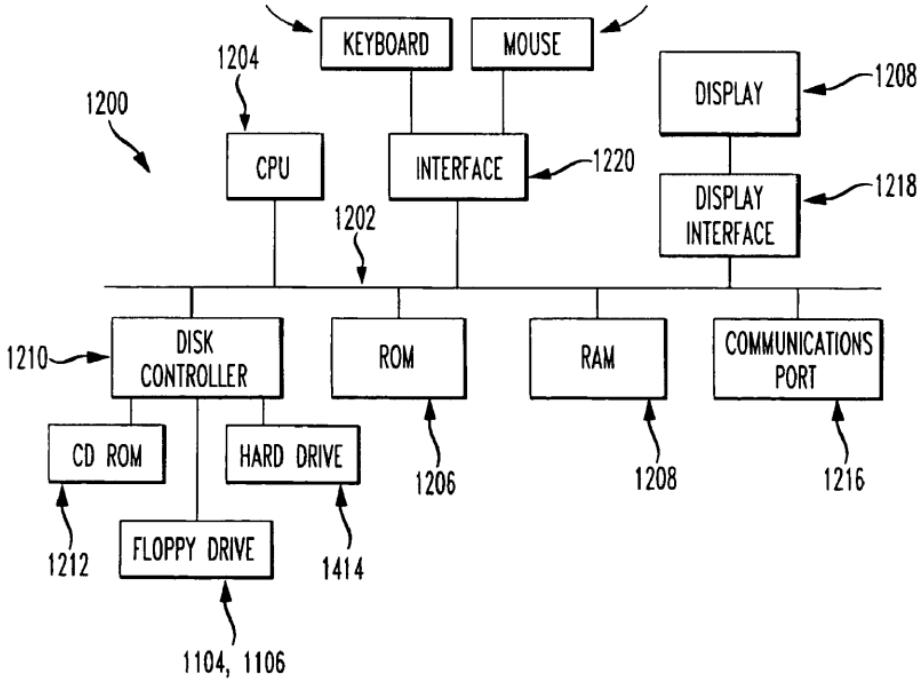

Cheng, Figure 12

147. **U.S. Patent 6,788,949 to Bansal ("Bansal"):** Bansal explains that "a typical information device" which can "symbolize" a server, illustrated in Figure 5 (below), includes "**well-known** components such as one or more network interfaces 5100, one or more processors 5200, one or more memories 5300 containing instructions 5400, and/or one or more input/output ("I/O") devices 5350." (Bansal, 6:66-7:5.)

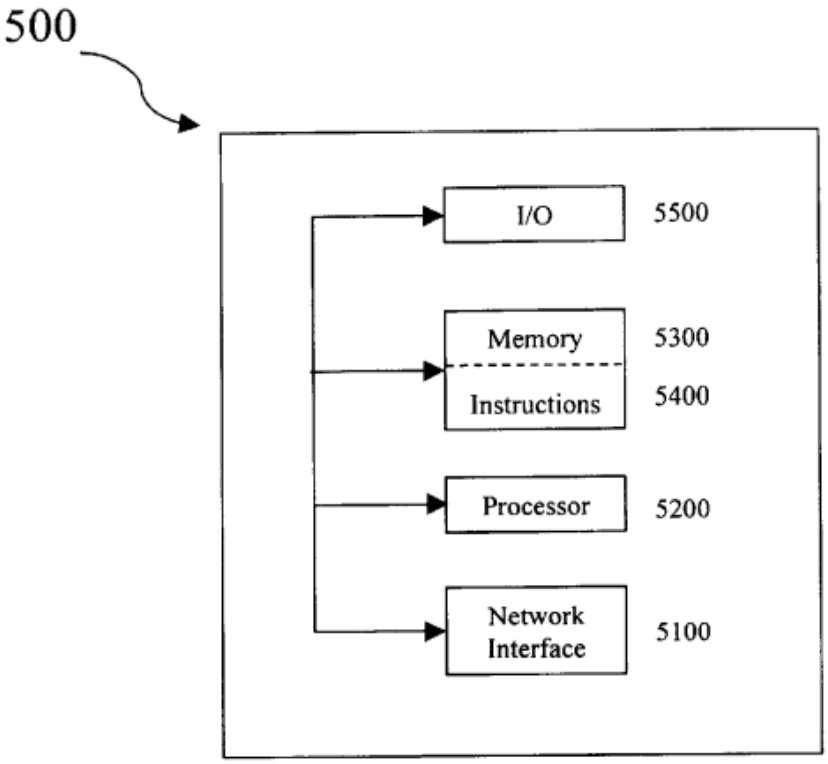

Bansal, Figure 5

148. Additionally, Pelkey and Eck which I discuss in Ground 2 discloses a server having a CPU, memory, and network interface. (*See, e.g.,* Eck, 3:46-47; Pelkey, 5:7-14.)

c) Processing Limitations [23B]-[23G]

149. Limitations [23B]-[23G] recite substantially overlapping subject matter as limitations [1A]-[1F], as indicated in my table below.

Claim 1	Claim 23
[1A] providing an interface permitting a first user to control activation of a mobile information channel through which the first user can share access to content with a plurality of additional users;	[23B] the processing element providing at least a portion of an interface permitting a first user to control activation of a mobile information channel through which the first user can share access to content with a plurality of additional users;
	the processing element being configured to:
[1B] activating the mobile information channel responsive to input received from the first user via the interface;	[23C] activate the mobile information channel responsive to input received from the first user via the interface;
[1C] inserting content provided by the first user into the mobile information channel;	[23D] insert content provided by the first user into the mobile information channel;
[1D] receiving additional content relating to the mobile information channel from one or more of said additional users via one or more respective mobile devices associated with at least one wireless network;	[23E] receive additional content relating to the mobile information channel from one or more of said additional users via one or more respective mobile devices associated with at least one wireless network;
[1E] inserting at least a portion of the additional content into the mobile information channel; and	[23F] insert at least a portion of the additional content into the mobile information channel; and

Claim 1	Claim 23
[1F] integrating into the mobile information channel information associated with at least one wireless networking functionality of said at least one wireless network.	[23G] integrate into the mobile information channel information associated with at least one wireless networking functionality of said at least one wireless network.

150. As I discussed in §IV.B.1.b.(3), the server and its processing element "*provid[es] an interface*" that "*permit[s] a first user to control activation ...*" and for the reasons discussed in that section, the Randall-Forsyth combination renders limitation [23B]. Limitations [23C]-[23G] recites substantially overlapping subject matter as limitations [1B]-[1F]. For the reasons in §§IV.B.1.b-d, the Randall-Forsyth combination discloses the processing element of the server performs these limitations.

4. Independent Claim 25

a) Preamble [25P] and "Plurality of Servers" [25A]

151. The combination of Randall and Forsyth discloses a "*network-based communication* system" [25P] comprising "*a plurality of servers configured to communicate over the network*" [25A]. The Forums service is based on a client-server model and is implemented on a network such as the one illustrated in Randall's Figure 4 (below). Through this network architecture, services, like Forums "act[] in effect like a fully personalised web portal, yet with the information links not consolidated in one general area, but instead distributed to the domains in which

they are most likely to be relevant to a user." (Randall, 13:22-24.) The Symbian Forums infrastructure, illustrated below, includes "*a plurality of servers*": "internet servers" hosting individual Private and Public Forums (as enhanced by Forsyth) and "internet servers" hosting extensible databases (as taught by Randall). As shown, wireless devices access these servers/databases via the wireless network and non-mobile devices access these servers via Internet respectively.

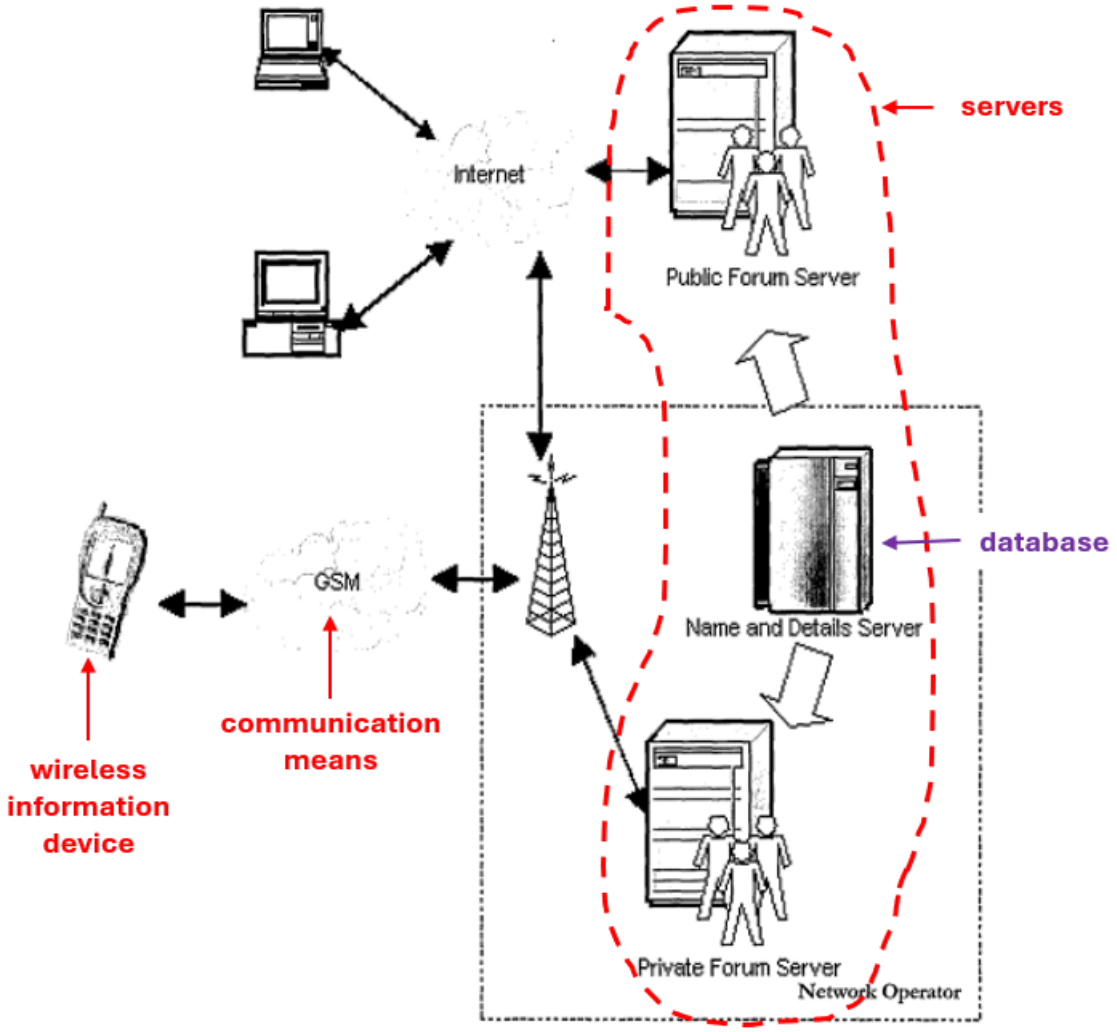

Symbian Forums—Randall, Figure 4

b) Processing Limitations [25B]-[25G]

[25B] at least one of the servers providing at least a portion of an interface permitting a first user to control activation of a mobile information channel through which the first user can share access to content with a plurality of additional users; [25G] integrate into the mobile information channel information associated with at least one wireless networking functionality of said at least one wireless network.

152. Limitations [25B]-[25G] recite substantially overlapping subject matter as limitations [1A]-[1F] and [23B]-[25B], as indicated in my table below.

Claim 1	Claim 23	Claim 25
[1A] providing an interface permitting a first user to control activation of a mobile information channel through which the first user can share access to content with a plurality of additional users;	[23B] the processing element providing at least a portion of an interface permitting a first user to control activation of a mobile information channel through which the first user can share access to content with a plurality of additional users;	[25B] at least one of the servers providing at least a portion of an interface permitting a first user to control activation of a mobile information channel through which the first user can share access to content with a plurality of additional users;
	the processing element being configured to:	wherein said at least one server is configured to:
[1B] activating the mobile information channel responsive to input received from the first user via the interface;	[23C] activate the mobile information channel responsive to input received from the first user via the interface;	[25C] activate the mobile information channel responsive to input received from the first user via the interface;

Claim 1	Claim 23	Claim 25
[1C] inserting content provided by the first user into the mobile information channel;	[23D] insert content provided by the first user into the mobile information channel;	[25D] insert content provided by the first user into the mobile information channel;
[1D] receiving additional content relating to the mobile information channel from one or more of said additional users via one or more respective mobile devices associated with at least one wireless network;	[23E] receive additional content relating to the mobile information channel from one or more of said additional users via one or more respective mobile devices associated with at least one wireless network;	[25E] receive additional content relating to the mobile information channel from one or more of said additional users via one or more respective mobile devices associated with at least one wireless network;
[1E] inserting at least a portion of the additional content into the mobile information channel; and	[23F] insert at least a portion of the additional content into the mobile information channel; and	[25F] insert at least a portion of the additional content into the mobile information channel; and
[1F] integrating into the mobile information channel information associated with at least one wireless networking functionality of said at least one wireless network.	[23G] integrate into the mobile information channel information associated with at least one wireless networking functionality of said at least one wireless network.	[25G] integrate into the mobile information channel information associated with at least one wireless networking functionality of said at least one wireless network.

153. As I discussed in §IV.B.1.b.(3), a server "*provid[es] an interface*" that "*permit[s] a first user to control activation …*" and for the reasons discussed in that section, the Randall-Forsyth combination renders limitation [25B]. Limitations [25C]-[25G] recites substantially overlapping subject matter as limitations [1B]-[1F]

and [23C]-[23G]. For the reasons in §§IV.B.1.b-d, the Randall-Forsyth combination discloses the processing element of the server performs these limitations.

C. Dependent Claims

1. Claims 7-8—"Wireless Networking Functionality"

> 7. The method of claim 1 wherein the information associated with at least one wireless networking functionality of said at least one wireless network comprises one or more messaging actions implementable over the wireless network.
>
> 8. The method of claim 1 wherein the information associated with at least one wireless networking functionality of said at least one wireless network comprises one or more collaboration actions implementable over the wireless network.

154. Independent claim 1 recites "*information associated with at least one wireless networking functionality of said at least one wireless network*" [1F]. Claims 7 and 8 further narrow this limitation by discussing what the "*information comprises.*" I discussed the subject matter of each of these limitations in §IV.B.1.d in my analysis of [1F]. For the reasons discussed in §IV.B.1.d, the combination of Randall and Forsyth renders claims 7 and 8 obvious.

2. Claims 9-10—"Content Integration"

> 9. The method of claim 1 further comprising providing one or more content integration options to the first user and the plurality of additional users.
>
> 10. The method of claim 9 wherein the one or more content integration options are based in part on respective wireless networking functionalities available to the first user and the plurality of additional users.

155. Forums provides multiple options for including content in a Forum. For example, Forsyth discloses that "**personal content** such as photographs, opinions, music playlists, music tracks etc." is shared "amongst a pre-defined group." (Forsyth, 4:9-11.) Forsyth discloses posting a text message to a Forum. For example, Forsyth describes Forums as "an easy to understand **messaging** tool that facilitates open discussion amongst a group." (Forsyth, 5:27-29.) Forsyth further describes support within Forums for "group based text messaging" and "group based multi-media messaging." (Forsyth, 3:36-44.)

156. And both Randall and Forsyth describe examples of posting photos/images. Randall describes a function called "Take a picture" which involves photo capture, upload, and storage. (Randall, 80.) This function is supported by "a special type of mobile phone, with a photographic lens." (Randall, 80.) I note the Nokia 7650 that I described above is an example of a commercially available device that included digital imaging (via a digital camera). In the "Take a picture" function, Randall directs the user to "[p]oint the phone at something that interests you or makes you laugh, press the button, and it takes a digital picture which you can send to your friends." (Randall, 80.) Randall also describes a "[p]ersonal view" feature utilizing a "[c]amera in the wireless information device" for "posting images" to the server. (Randall, 74.)

157. Forsyth similarly discloses an exemplary Forum for "Discussion of Photos" (Scenario 2) which uses the function of taking a picture at the wireless device. For example, a "user is on holiday, and he takes a few photographs of the beach with his digital camera." (Forsyth, 7:30-31.) He then "uploads them to his remote storage area", "creates a Forum message based on the photographs" and "sends to the group. (Forsyth, 7:30-35.) After the group is created, "[s]ome people post their own photos back." (Forsyth, 7:41-42.) In the exemplary Forum "Digital Memento from a User's Birthday", Forsyth teaches that Forum members post "photos." (*See* Forsyth, 9:5-35.) As I discussed above, Randall describes a mobile device integrating a digital camera. (Randall, 80.) Thus, the combination of Randall and Forsyth discloses capturing a photo at the mobile device either via an integrated camera or via a camera interfacing with the mobile device.

158. Forsyth further describes posting music files as content: ("The group object could also be used to share, amongst a pre-defined group, personal content such as photographs, opinions, music playlists, **music tracks** etc.") Forsyth further describes an exemplary Forum where "[p]eople post MP3s of the kind of music played at each club." (Forsyth, 9:21-22.)

159. The ability to capture text content, photo/image content, graphic content, music content, etc. is determined by the functionalities of the wireless device and the ability to post this content to the Forum (i.e., send to the server) is

based on the "*wireless networking functionalities available*" to Forum members. As I discussed in §§IV.A.1.c.(2)-(3), WAP and GSM-SMS both support the ability to send text messages, photos/images in a message, a music file in a message, etc.

160. Thus, the combination of Randall and Forsyth "*provid[es] one or more content integration options to the first user and the plurality of additional users*" [9] where "*the one or more content integration options are based in part on respective wireless networking functionalities available to the first user and the plurality of additional users*" [10].

3. Claims 11-12—"User-Activatable Control Mechanisms"

> 11. The method of claim 1 wherein the additional content is associated with the mobile information channel via one or more user-activatable control mechanisms.
>
> 12. The method of claim 11 wherein the one or more user-activatable control mechanisms comprise a hyperlink.

161. The combination of Randall and Forsyth discloses that the "*additional content is associated with the mobile information channel via one or more user-activatable control mechanisms*" [11]. Specifically, the user interface provided to a user includes a user-activatable control mechanism (drop down menu of available actions). For example, as discussed in §IV.B.1.d.(2), in Forsyth's "group based text messaging" Scenario 1, a Forum member is "shown the messages posted to that Forum" on the Forum page (Figure 7 [below-top]). (Forsyth, 6:38-40.) Through this interface, the user can "make a context menu appear" which allows the user to "carry

out additional tasks related to the Forum." (Forsyth, 6:44-49, Figure 8 (below-left).) "If a user selects 'Forum Reply' then a new message is posted to the Forum" including posting a response. (Forsyth, 6:54-56; Figure 9 (below-right).)

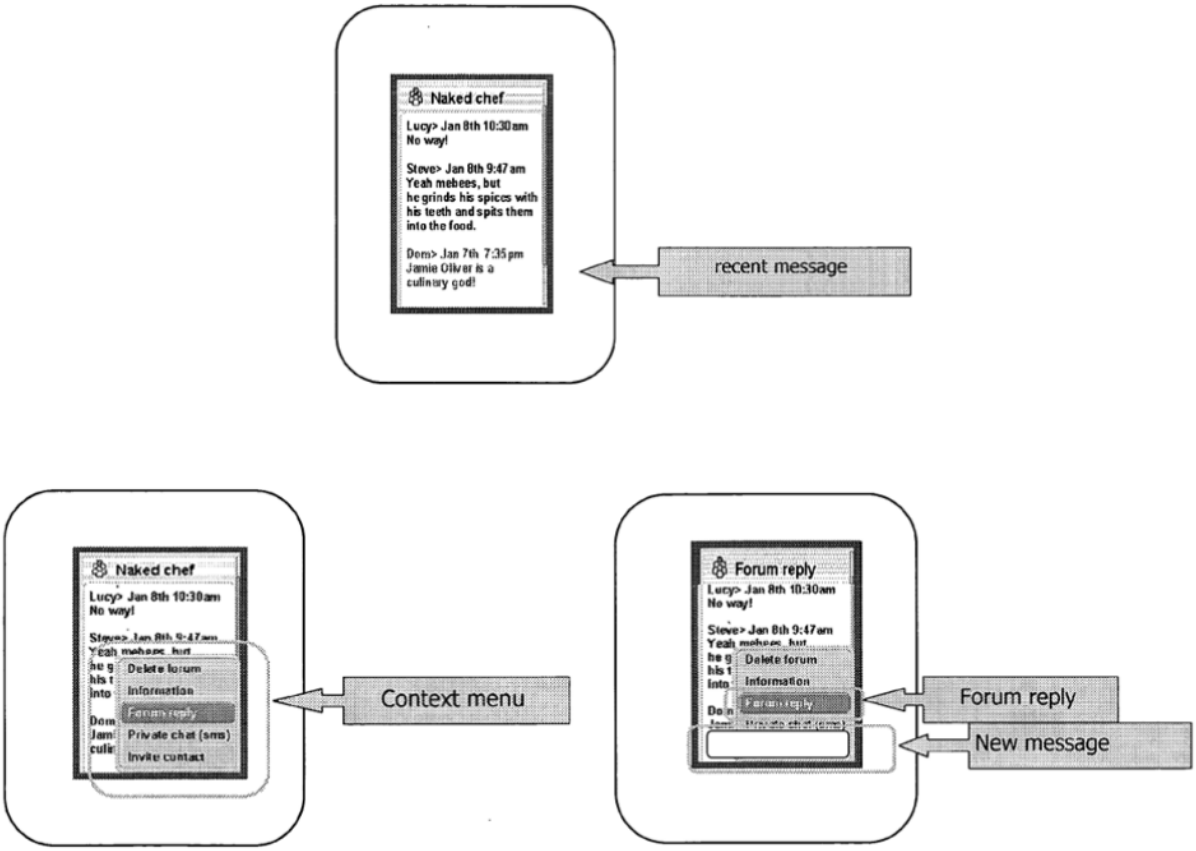

Symbian Forums—Forsyth, Figure 7 (top); Figure 8 (bottom-left)
Figure 9 (bottom-right)

162. The combination of Randall and Forsyth discloses that "*the one or more user-activatable control mechanisms comprise a hyperlink*" [12]. Specifically, both Randall and Forsyth allow a user to share and post hyperlinks or create hyperlinks to content. For example, in Social Scheduling Scenario 3, Forsyth teaches that a

Forum "has links to trailers, reviews and schedules etc. for each film." (Forsyth, 8:60-64.) In Digital Memento Scenario 4, Forsyth teaches that "[p]eople post MP3s of the kind of music played at each club and **links** to the club's pages" which are "made available to all to download." (Forsyth, 9:21-24.) In "Radio Forums", Forsyth teaches the ability for a user to "creat[e] a link between the user's store of digital music and the playlist stack" of the Forum. (Forsyth, 11:44-47.) And in Discussion of Photos Scenario 2, Forsyth teaches that group members receive an object "which incorporates or references the photographs." (Forsyth, 7:37-38.) The statement "references the photographs" indicates a link provided in the object to the user's photo storage which is accessible by a link structured like a WWW link. (*See* Randall, 64:25-26 (Database access number for user is "in one implementation an address on a web server—for example www.indirect.com/Alice").)

4. Claim 14—"Additional Content"

14. The method of claim 1, wherein at least a portion of the additional content is obtained from a device-captured data source of the given user, the device-captured data source comprising a source of at least one of device-captured video data, device-captured audio data and device-captured location coordinates.

163. Randall and Forsyth each discloses capturing multiple types of content at the mobile device. For example, Forsyth discloses that "**personal content** such as photographs, opinions, music playlists, music tracks etc." is shared "amongst a pre-defined group." (Forsyth, 4:9-11.) Forsyth's Figure 13, which is reproduced below,

is a table listing applications/features "enabled using Forums." (Forsyth, 4:66-67.) This table shows a sampling of the content supported within Forums. For example, in the "Multimedia" row, Forsyth identifies "[p]hoto posting, storing, commenting, [and] vandalising" and "voice messages." (*See* Forsyth, Fig. 13.) The mention of commenting on photos indicates a forum member posts a message (message content) and vandalizing indicates a forum member posts graphic content. In the "Interaction" row, Forsyth identifies "[l]inks/bookmarks" and "[r]ating[s]." (*See* Forsyth, Fig. 13) Links and bookmarks are examples of data content and ratings falls into the category of polls. I specifically discuss posting a photo, a message, a music file, and a graphic at a mobile device below. However, other examples from Randall and Forsyth are equally applicable.

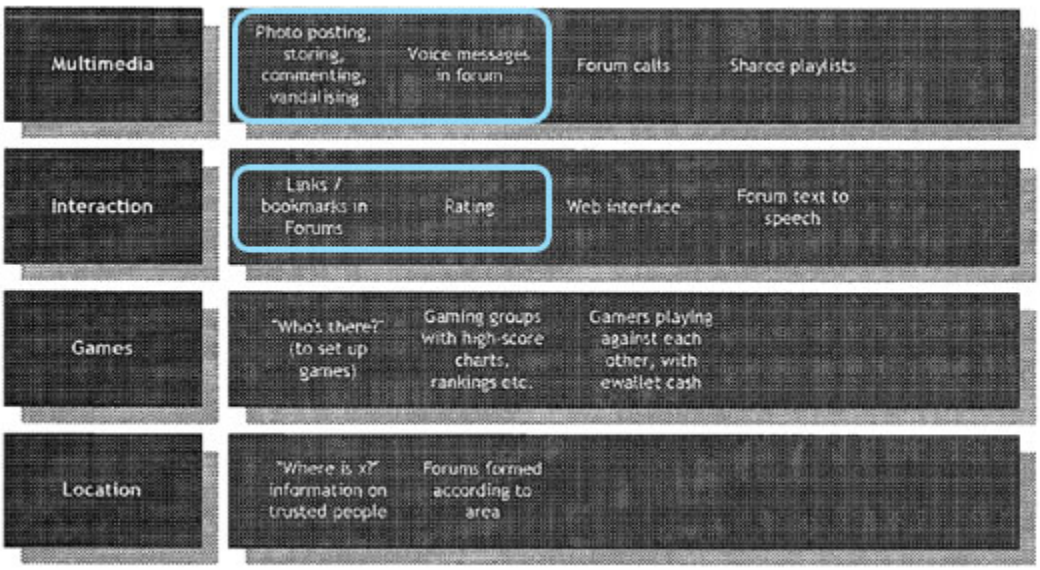

Symbian Forums—Forsyth, Figure 13

164. In addition to capturing a voice message, Randall and Forsyth disclose posting a music file at the wireless information device. Forsyth teaches the central server "act[s] as a store for resources which group-members may wish to discuss **and share** (e.g. personal information, personal photographs, **music**, web sites etc)." (Forsyth, 3:31-34; *see also*, Forsyth, 4:9-11 ("The group object could also be used to share, amongst a pre-defined group, personal content such as photographs, opinions, music playlists, **music tracks** etc.").) Forsyth describes a "Radio Forums" example in which "users submit tracks to a communally-built-up playlist" which is achieved "by creating a link between the user's store of digital music and the playlist stack." (Forsyth, 11:41-47.) Forsyth discloses capturing a music file, which is "*audio data*" at the wireless device. (Forsyth, 3:31-34, 4:9-11, 9:21-22, 11:41-47.) Forsyth further describes an exemplary Forum (Scenario 4) where "[p]eople post MP3s of the kind of music played at each club." (Forsyth, 9:21-22.) While not explicit, a POSITA would have understood the shared track/MP3 (music file) is captured in some manner on the user's device, either by recording or via data transfer from another device, so that it can be uploaded to the server.

165. Randall also mentions the function called "[s]end me something" which allows a user "to send someone pictures, words, video clips or **music** while you are talking to them." (Randall, 80.) While mentioned in the context of an on-going communication (e.g., a voice call or chat session), Randall describes "send me

something" generally as a feature that provides "[r]icher [c]onversations." (*See* Randall, 80:1.) Therefore a POSITA would have understood and been motivated to also use this function as part of Forums which supported chat and voice conversations among group members.

166. Thus, the combination of Randall and Forsyth discloses that content, including content provided by additional users, "*is obtained from a device-captured data source of the given user, the device-captured data source comprising a source of at least one of ... device-captured audio data*."

167. Forsyth teaches that device location coordinates are obtained "via some onboard method such as GPS." (Forsyth, 13:45-58.) Randall similarly discloses obtaining location "via a GPS wireless information device." (Randall, 74; *see* Randall, cl. 7 (reciting that user location "is obtained using a GPS system").) GPS location data is stored in the database associated with the user, as shown in the excerpt of Table 1 (reproduced below).

Table 1

Alice's iData			
Field/Attribute	**Category**	**Details**	**i-Groups**
First name	personal	Alice	all
Family name	personal	Edwards	all
Title	work	European Marketing Manager	all
⋮			
Bluetooth	location	Bluetooth pods 1000-1020 ...Sentinel room 2…	
GPS	location	London W1, Seymour St.	partner
Hobby	preferences	Photography, travel	friends
Book	preferences	Maverick	friends
AlbumOfTheWeek	InstaPoll		friends

Randall, Excerpts from Table 1

168. Randall describes several features that utilize location. For example, in the people tracking feature, after the user has subscribed to the location service, associated groups (e.g., friends/parents) "could add a 'map' application to their own devices, which could show their position on digital maps and also, by using the location attribute of the user's database, it could also show the position of the user." (Randall, 6:1-4.)

169. Randall also describes a feature called "[y]our map and then some" where "[a]t the touch of a button, your phone can display a map of the area you are standing in." (Randall, 83.) Randall further describes a feature called "[r]endezvous" where a "service on your mobile phone [] help[s] you meet friends and family in crowded or unfamiliar places" and "you can elect to have your location visible to others - so using your phones everyone in your group can tell precisely where the other are." (Randall, 83.)

170. Thus, the combination of Randall and Forsyth discloses that content, including content provided by additional users, "*is obtained from a device-captured data source of the given user, the device-captured data source comprising a source of at least one of ... device-captured location coordinates*.

5. Claim 15—"Collaborative Workspace"

15. The method of claim 1 wherein the mobile information channel comprises a collaborative workspace.

171. Randall and Forsyth provide numerous examples of forums where members of a group collaborate—"*a collaborative workspace*." In fact, Symbian Forums is designed with the goal of collaboration and group discussion. Forsyth describes Forums as "a tool for group working and communication." (Forsyth, 2:59-60; *see* Forsyth, 5:27-30 ("Forums … facilitates open discussion amongst a group …").) Within each group (Forum), multiple users contribute content such as

messages, photos, audio files, graphics, or other data, as I discussed in my analysis of the independent claims.

172. Forums allows a user flexibility when creating an individual Forum. A Group (Forum) "can be defined by a number of different parameters" and is "not necessarily limited to the kinds of groups currently known (e.g., groups of friends or work colleagues." (Forsyth, 3:61-63.) For example, the group object (Forum) "could be related to a particular interest, such as being gaming related, with group members being those people with an interest in playing a particular kind of computer game." (Forsyth, 4:2-5.)

173. Forsyth teaches that a Forum can be used for a "Collaborative Activity." (Forsyth, 11:32-34.) Forsyth recognizes that "groups go and do things." (Forsyth, 11:34-35.) Forums "acts as springboard for playing games, going surfing, listening to music etc." (Forsyth, 11:35-37.) For example, a Forum can be as simple as collaborating to "see[] who is there to play a game" or individual Forums can be "dedicated to particular games/game areas." (Forsyth, 11:37-39.)

174. Forsyth's "Social Scheduling" Scenario 3 provides a specific example of a "*collaborative workspace*" that allows a user in the group to pose a question and members of the group to collaborate and provide an answer. In this Scenario, a user "creates a new Forum titled 'Anyone fancy a trip to the cinema next week some time?" (Forsyth, 8:44-46.) The user also specifies individuals to invite to participate

in the group. (*See* Forsyth, 8:48.) The central server "handles contacting each group member and handles also storing the message thread relating to this subject." (Forsyth, 8:48-52.) The group members discuss (collaborate on) "which night to go on perhaps using some simple control to indicate their preferred days, which is then reflected in a diagram showing the aggregate), which actual cinema to use, and which film to see." (Forsyth, 8:56-60.) The Forum also "has links to trailers, reviews and schedules etc. for each film … which are all used to inform the discussion." (Forsyth, 8:60-64.) After the group reaches agreement, the user "uses a link to book the tickets." (Forsyth, 8:65-66.)

6. Claim 16

16. The method of claim 1 further comprising permitting the first user to establish a title for the mobile information channel.

175. As shown in Figure 4 (below), the user is presented with a "new forum" screen on the user interface through which the user creates a Forum. As shown, when creating a Forum, the user enters the Forum title ("Naked Chef"), and types in the initial message ("Jamie Oliver is a culinary god!!"). (Forsyth, 5:52-63.) Thus, the combination of Randall and Forsyth discloses "*permitting the first user to establish a title for the mobile information channel*" [16].

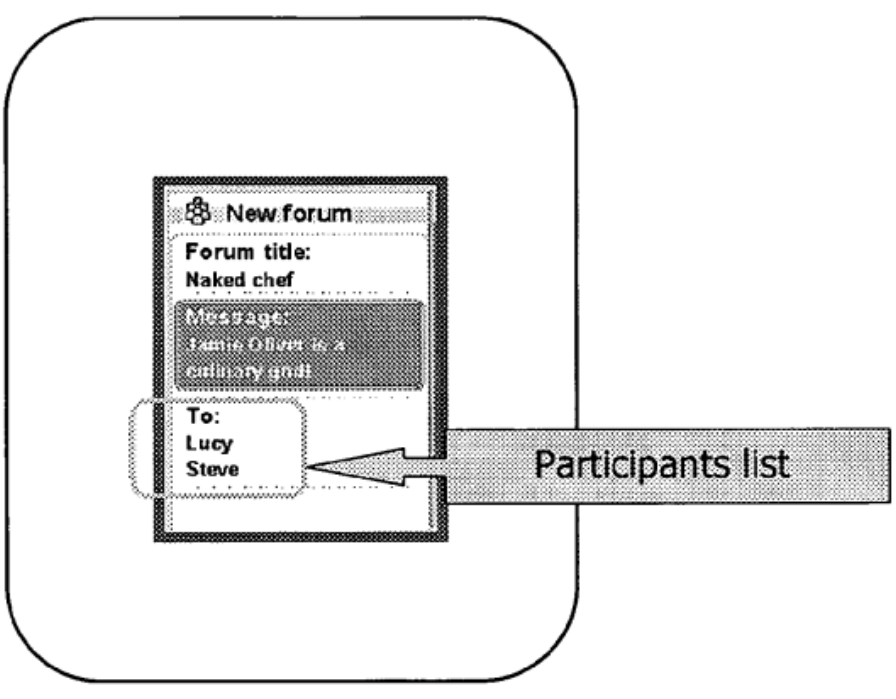

Symbian Forums—Forsyth, Figure 4

7. Claim 17—Chat Channel

17. The method of claim 1 wherein the mobile information channel comprises a chat channel facilitating interaction between the first user and the plurality of additional users.

176. Symbian Forums, described by Randall and Forsyth, is a group-based, two-way communication platform allowing users to interact with one another. Forums "is designed specifically to allow current and very popular internet type services (e.g., **chat/instant messaging between groups**) to be handle[d] effectively between mobile devices." (Forsyth, 2:42-45, 5:10-14 (same).) Forsyth's Figure 1 (reproduced below) specifies the capabilities of Forums including "creat[ing] a discussion between group members on your own device." (*See* Forsyth, Table 1; *see*

also Forsyth, 5:27-30 ("Forums … allows multiple **chat-style** conversations to take place simultaneously.").) As I discussed throughout, the Scenarios presented in Forsyth illustrate a Forum starting with an original post followed by replies from other Forum members.

Capability:	**Can you create a discussion between group members on your own device?** (Important since it facilitates setting up a group discussion)	**Push delivery?** (Push is more convenient to mobile users)	**Is it possible to retain a long term record of exchanges between group members?** (An important attribute for many new kinds of services)	**Can you deliver messages to all members of a group, or is it restricted to one to one?** (Clearly critical to group based messaging)	**Do all group members see the same, unitary message thread, or are there instead many separate individual messages?** (A single, unitary message entity (e.g. a thread) makes message organisation and navigation far easier.)	**If a recipient is off-line (e.g messaging app not open), are they alerted anyway?** Potentially very important for mobile useage because of the high proportion of time users may not be on-line (i.e. actively using their messaging application).
Web bulletin board	No	No	Yes	Yes	Yes	No
Chat/instant messaging	Yes	Yes	No	Yes	Awkward	No
Group e-mail	Yes	No	Awkward	Yes	No	No
SMS	Awkward	Yes	No	Awkward	No	Yes
Forums	**Yes**	**Yes**	**Yes**	**Yes**	**Yes**	**Yes**

Forsyth, Figure 1 (Table 1)

177. In addition to ability to chat simultaneously with all members of the forum, Forums "include[s] a **Private chat function**" which allows "a Forum

participant to establish a private conversation (e.g., SMS or voice) with another Forum participant." (Forsyth, 7:9-12.)

178. Accordingly, the combination of Randall and Forsyth discloses "*the mobile information channel comprises a chat channel facilitating interaction between the first user and the plurality of additional users*."

8. Claims 18-19—"entertainment-related entity"

18. The method of claim 1 wherein the mobile information channel is associated with an entertainment-related entity.
19. The method of claim 18 wherein the entertainment-related entity comprises at least one of a television program, a movie and a music artist.

179. The combination of Randall and Forsyth discloses that "*the mobile information is associated with an entertainment-related entity*" [18]. Randall and Forsyth both teach that a user can create a Forum to discuss a wide range of topics, including entertainment-related entities. For example, Randall teaches that "a forum allows several people to be part of a 'channel' or room, which is usually themed; for instance supporters of a football team may meet in a channel devoted to that team to discuss the team." (Randall, 40:17-19.) The "football team" is an "*entertainment-related entity*" and therefore the Forum "*is associated with an entertainment-related entity*" [18].

180. As I discussed above, in Forsyth's Scenario 1, the user creates a Forum to discuss the Naked Chef which was a television cooking program on the BBC.

(Forsyth, 5:35-6:62.) Thus, the combination discloses "*the mobile information channel is associated with an entertainment-related entity*" [18], specifically, "*a television program*" [19].

9. Claims 20-21—"Mobile Device Application"

20. The method of claim 1 wherein the mobile information channel is associated with a mobile device application.
21. The method of claim 20 wherein the mobile device application comprises a personalized content application.

181. Symbian Forums, described by Randall and Forsyth, includes an "*application*" with a program component at the wireless device and a program component on the server: "FIGS. 2-11 are screen shots of the display of a wireless information device running the **Forums application**." (Forsyth, 4:62-63; *see also*, Forsyth, 2:46-47 ("Forums runs on the object based operating system Symbian OS"), 4:64-65 ("FIG. 12 is a table showing typical features of three generations of Forums applications"), 9:11-13 (system includes "wireless information devices running applications which access the information held on the extensible databases running on central servers"); 40:15-41:14 (describing Forums application).)

182. Forums is a "*personalized content application*" because a user manages his or her profile and can personalize his or her experience in a number of ways. The database used in the Forums network infrastructure "contains information from or relating to many different entities; it is organised into information fields which an entity can complete or have completed." (Randall, 8:26-28.) An entity can be, e.g.,

a user, a corporation or even a group such as a Forum. Through the Forums infrastructure, a user enters "basic identity data about themselves" including "name, contact numbers, and addresses" in the database and accesses services to "provide location, availability and mood information as well as to define an identity avatar which are associated with the user's database entry. (Randall, 23:14-17.)

183. Randall's Table 1 is an application view of data associated with an entity (user, Alice). "Some of the information is entered by Alice" and other information is populated automatically. (Randall, 66:16-19.) A view of this data is "provided on Alice's mobile device to allow her to manage her data." (Randall, 66:19-20.) For example, Alice can add personalized notes for home (sorry about dinner) and work (in meeting), her current mood (very tired), and a subject to send when making a telephone call (dinner tonight). (*See* Randall, Table 1.) She can also provide a list of her hobby and book preferences. (*See* Randall, Table 1; Forsyth, 7:20-25 ("An 'embedded discussion' version of Forums allows the creation of a threaded discussion attached to personal information stored on a remote server. Storing personal information (contact lists, diaries, photographs etc) on a remote server is one possible model of enabling robust storage combined with easy access to personal information.").)

184. Symbian Forums further provides a user with the capability of creating a personalized Forum which is also a "*personalized content application*" operating

within the Forums application. Forsyth describes the creation of both private forum groups and public forum groups. Public groups "are collections of people with interests in common, who do not necessarily know each other prior to their membership of a group." (Forsyth, 17:5-7.) A private group, in contrast, is "used amongst individuals who already know each other in some way." (Forsyth, 13:63-64.) These forums "may be used for example to discuss and arrange an outing to the cinema." (Forsyth, 13:64-66.) A user can also use a private forum "to share, amongst a pre-defined group, **personal content** such as photographs, opinions, music playlists, music tracks etc." (Forsyth, 4:9-11.)

185. Thus, the combination of Randall and Forsyth discloses "*the mobile information channel is associated with a mobile device application*" [20] and "*the mobile device application comprises a personalized content application*" [21].

10. Claim 24—Server

24. The apparatus of claim 23 wherein the processing element comprises at least one server accessible over the Internet via a network interface.

186. The combination of Randall and Forsyth discloses that the server includes a "*processing element*" with "*at least one server accessible over the Internet via a network interface.*" As I discussed in §IV.B.4.a, the Symbian Forums infrastructure, illustrated below, includes "internet servers" hosting individual Private and Public Forums (as enhanced by Forsyth), "internet servers" hosting

extensible databases (as taught by Randall), wireless information devices which access these servers/databases, and non-mobile (fixed) computing systems (represented by traditional desktop PC). Randall uses "existing transports" (communication means) for client-server communication such as "WAP to access the services on the server side" and "standard IP formats such as MIME, SMTP and HTTP" to "enable compatibility with Internet Messaging systems." (*See* Randall, 58:23-27.) That is, the server includes a GSM interface (e.g., GSM/WAP or GSM-SMS) for communicating with mobile devices over the wireless network and a different interface (e.g., HTTP) for communicating with non-mobile devices over the Internet. That is, the server is "*accessible over the Internet via*", e.g., an HTTP "*network interface*" and over the wireless network via, e.g, a GSM WAP interface.

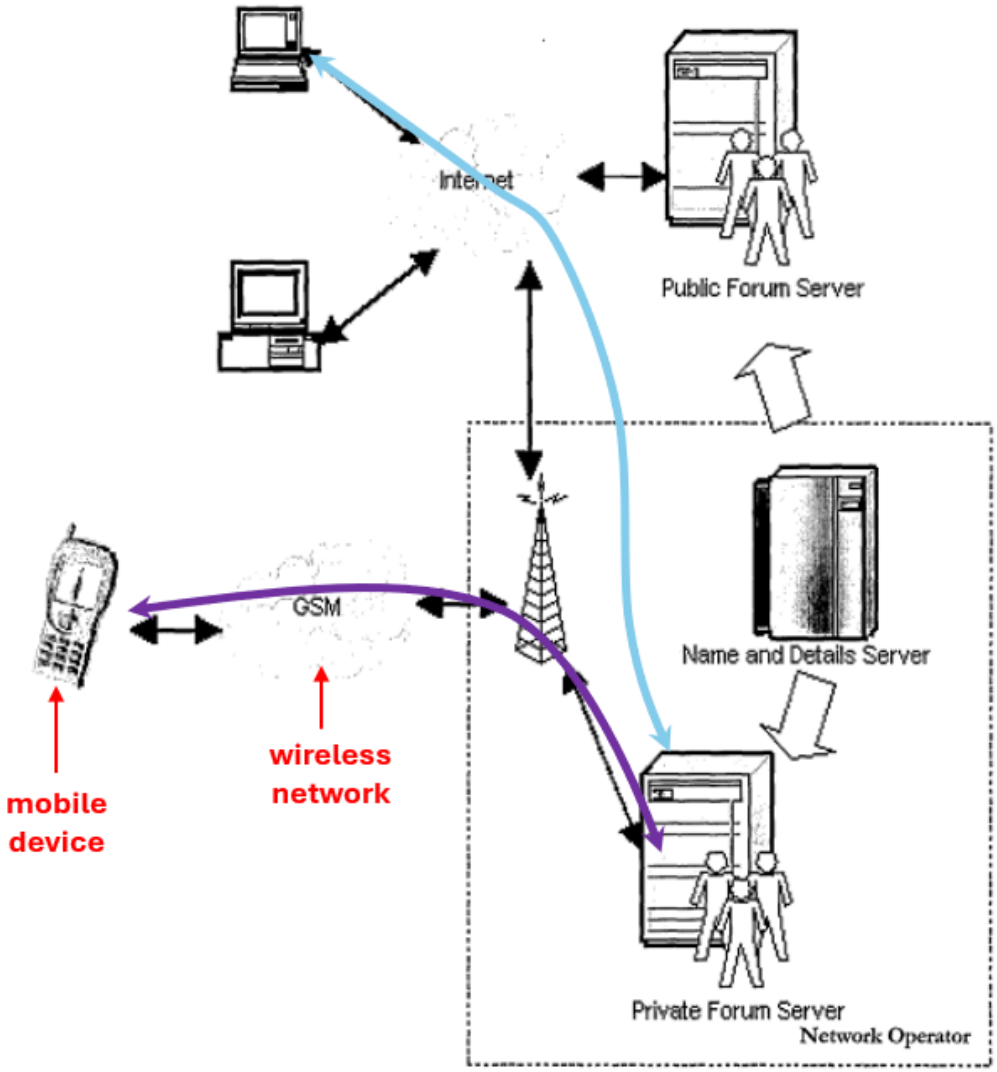

Symbian Forums—Randall, Figure 4

V. GROUND 2: The Combination of Pelkey and Eck Renders Claims 1, 7-12, 15, 17, 20 and 22-25 Obvious

A. Overview of the Combination

187. U.S. Patent 7,056,217 to Pelkey et al. ("Pelkey") and U.S. Patent 6,716,103 to Eck ("Eck"), both assigned to Nintendo Co., Ltd., relate to different aspects of a messaging system established for users of handheld Nintendo game

machines, specifically the well-known Nintendo Game Boy® device. Eck further discloses an exemplary game environment in which messages, photos, and sound clips can be shared with other users.

1. Pelkey

188. Pelkey was filed on November 28, 2000. Pelkey relates "to a messaging service for communicating messages between and among users of video game systems." (Pelkey, 1:14-16.) Figure 1B of Pelkey, reproduced below, illustrates a network "in which the messaging service described herein may be implemented." (Pelkey, 2:58-60.) The network "includes game systems 10 connected via communications circuits (e.g., modems, network interfaces, etc.) to a wide area network." (Pelkey, 2:60-62.) A network server 14 "stores games that may be played by users of the network." (Pelkey, 3:4-5.) A messaging server may be included within the network server or as a standalone component. (Pelkey, 3:9-31.)

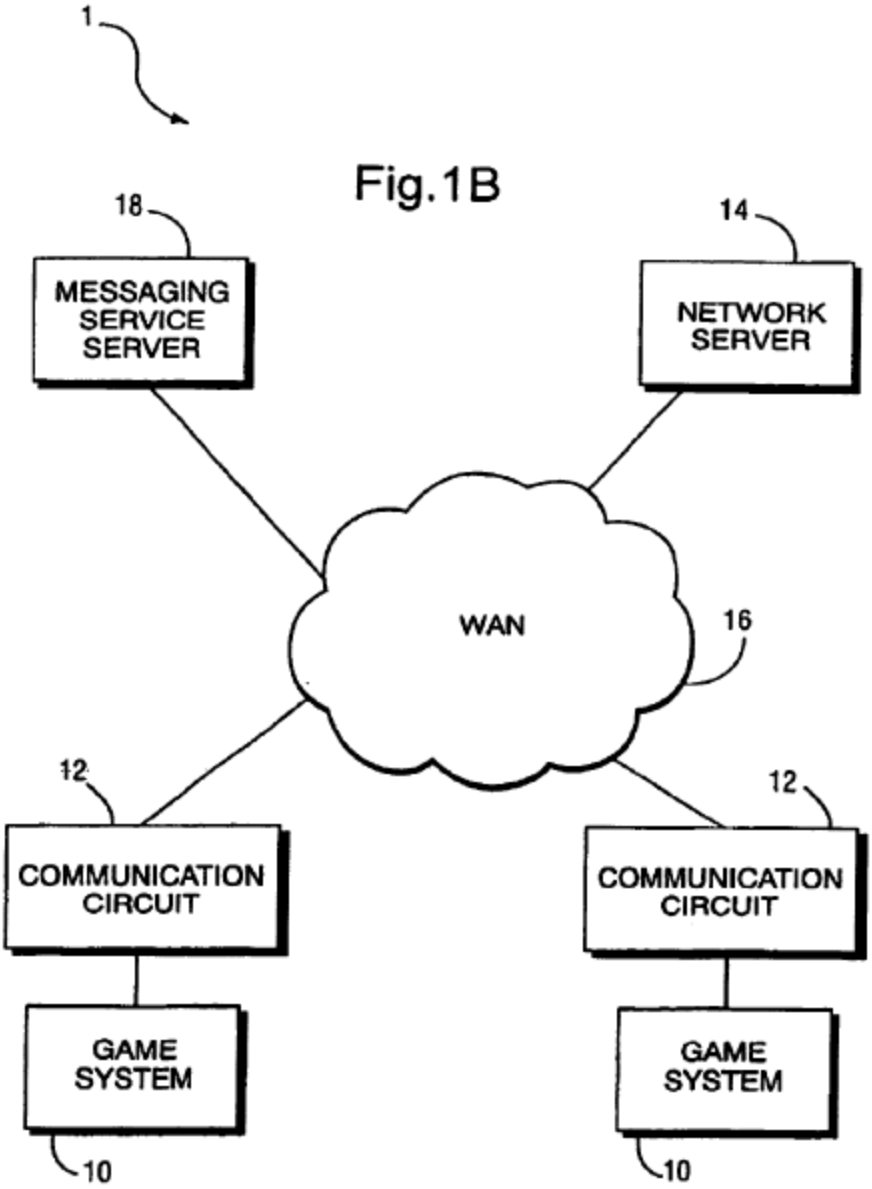

Pelkey, Figure 1B

189. The game systems 10 include "a portable (hand-held) color-display game system," shown, for example, in Figure 3B (below). (Pelkey, 4:55-57.) Additionally, or alternatively, a game console such as the N64 video game system may be used. (Pelkey, 3:38-48, Figure 2.)

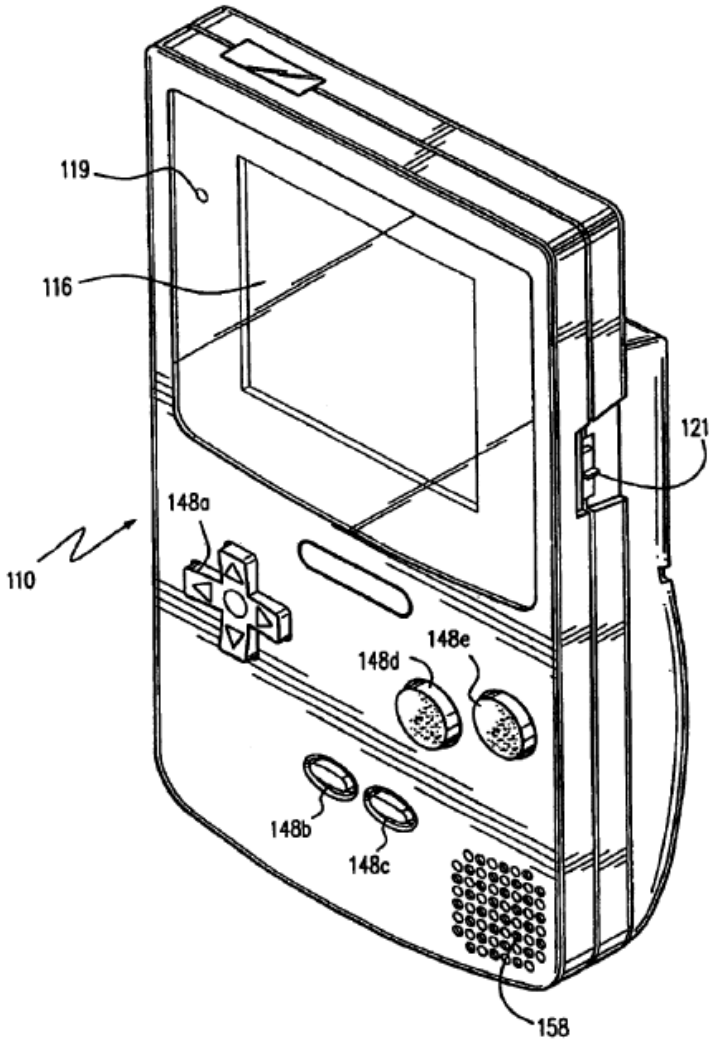

Pelkey, Figure 3B

2. Eck

190. Eck was filed on September 11, 2000. Eck discloses a modified version of the Nintendo Game Boy® ("portable game machine") that "provides enhanced multi-player capabilities through communications with other game machines." (Eck, 1:48-51.) Multi-player game play is achieved using a "pager cartridge" which is inserted into the "portable game machine" which may contain "a modem or other

network interface means for establishing communications over a network such as the Internet." (Eck, 9:43-46, 9:60-61, 27:51-53.) One class of games capable of being used with the "portable game machine" is "Multiple User Dungeon (MUD) games" which "are Internet-based on-line exploration and quest games in which an open-ended number of players simultaneously exist in the same game world, sharing experiences and adventures." (Eck, 10:1-7.)

191. In an exemplary multi-user embodiment, Eck discloses use of the "pager cartridge" to access "PagerWorld, a virtual community for the network of all users having pager cartridges." (Eck, 10:20-23.) In "PagerWorld," "[p]layers can find pen-pals" and "view message boards," among other activities. (Eck, 10:40-42.) "Players are represented in PagerWorld by a 'persona character' … that all other PagerWorld players will see." (Eck, 10:23-25.) "The system also enables bidirectional transmission of messages with images and sound bytes to other pagers in the network using, for example, a digital camera cartridge in combination with a pager cartridge." (Eck, 16:42-45.) Importantly, "image data obtained with a digital camera cartridge" can be used to "customize the persona character." (Eck, 12:38-40.)

192. The "pager cartridge provides a two-way paging device that has the ability to receive messages from other users in the paging system as well as from the paging system operator." (Eck, 9:40-43.) A user can conduct "messaging" activities

within PagerWorld including "broadcasts to all pagers," "group messages," "digital camera picture transmission (with/ without sound)," "messages plus sound bites," and "messages to and from Internet." (*See* Eck, 20:6-36.) Messages are read, composed and sent from the "Message Center" inside PagerWorld. (Eck, 11:27-29.) "Message Center" includes an "Address Book" that "provides a listing of other users by their handles" and "the persona character of the other user as it appeared on his/her last communication with the user." (Eck, 11:32-35; *see* Eck 12:16-19.) "Messages from the paging system operator may be sent to all users in the paging system, to certain groups of users in the paging system or to a particular user in the paging system." (Eck, 9:46-49.)

193. "At regular intervals, PagerWorld is updated. In one implementation, these PagerWorld updates are communicated to pager cartridge via night-time downloads when pager cartridge is in SLEEP mode. When this occurs, new areas are made available for the player to 'adventure' within." (Eck, 13:1-6.)

3. Motivation to Combine Pelkey and Eck

194. A POSITA would have been motivated to combine Eck's teachings regarding PagerWorld with the network and message server architecture taught in Pelkey.

195. Pelkey and Eck both disclose an enhanced version of the Nintendo GameBoy® that is in the same field as the '801 patent—"network-based

communication systems." (*See* EX-1001, 1:28-30; Pelkey, 1:37-42; Eck, Abstract.) Pelkey and Eck are also reasonably pertinent to problems addressed by the '801 patent, namely "optimizing" the sharing of information content on mobile devices. (*See, e.g.*, EX-1001, 1:48-53.)

196. Eck discloses the features of a multi-player game, PagerWorld. Eck further discloses the ability to share photos and sound clips and exchange messages with other players. In the preferred embodiment, such information is exchanged using a "pager cartridge" where "message charges are generally based on the number of characters in the message." (Eck, 16:57-60.) While Eck discloses that its "invention" can be applied to other technologies like WAP, (Eck, 25:17-20), it does not specifically disclose a client-server structure as taught in Pelkey.

197. Pelkey discloses the use of a network server and message server to facilitate game play and exchanging messages amongst users. But it does not specifically disclose the integration of messaging and sharing content like photos and sound clips with other users within its client-server environment. A POSITA would be motivated to apply the network and message server architecture in Pelkey to Eck in order to avoid the charge-based system for exchanging messages and photos via pager cartridge in Eck. In addition, a POSITA would be motivated to modify the "pager cartridge" in Eck as necessary to use PagerWorld in Pelkey given the disclosed benefits of PagerWorld including "exploration and adventure," "chat

and community interaction," and "character growth." (Eck, 10:13-19.) Notably, Pelkey does not describe any game play that includes in-game messaging in conjunction with the aforementioned features. In addition, the combination is nothing more than the application of a known technique (Eck's PagerWorld game) to a known method/product (Pelkey's client-server based messaging server) which was ready for further improvement to achieve predictable results. Replacing the pager system infrastructure in Eck with the client-server architecture in Pelkey is the simple substitution of a one known element for another to achieve a predictable result (internet-based functionality). As is using the PagerWorld "pager cartridge" in the Pelkey portable game machine.

198. A POSITA would have had a reasonable expectation of success in the combination and the results of the combination would have been predictable because both references are directed to the same product and activity (game play). Both Pelkey and Eck disclose the desirability of combining messaging capabilities with game play in a portable gaming system. (Pelkey, 2:20-23; Eck, 10:32-44.) And as explained below, the complimentary network architecture disclosed in Pelkey and Eck further demonstrates that such a modification could be made with a reasonable expectation of success.

B. Independent Claims 1, 22-23, 25

199. The ’801 patent includes four independent claims—a method claim (claim 1), a computer-program product (“CPP”)-style claim (claim 22), a device claim (claim 23), and a network-based communication system claim (claim 25). As noted above, claims 1, 22-23 and 25 have substantially overlapping processing limitations.

1. Claim 1

a) Preamble [1P]: “method”

200. The combination of Pelkey and Eck discloses a method for performing the actions recited in limitations [1A]-[1F] as discussed in §§V.B.1.b-d.

b) Limitations [1A]-[1C]

[1A] providing an interface permitting a first user to control activation of a mobile information channel through which the first user can share access to content with a plurality of additional users;
[1B] activating the mobile information channel responsive to input received from the first user via the interface
[1C] inserting content provided by the first user into the mobile information channel

(1) “Providing an Interface”

201. The combination of Pelkey and Eck discloses “*providing an interface permitting a first user to control activation of a mobile information channel*.” Pelkey discusses that the network for implementing a “messaging service” includes a game system 10 (e.g., the portable game machine) “connected via communications circuits

12 (e.g., modems, **network interfaces**, etc.) to a wide area network 16 such as the Internet." (Pelkey, 2:59-62.) Pelkey explains that the communication circuits 12 "may be provided internally to the game system or embodied as cartridges … removably attachable to a port or bay of the game systems." (Pelkey, 2:65-3:2.) Eck discloses the embodiment of a network interface in a cartridge. As shown in Eck's Figure 5A, the pager cartridge includes "an antenna 130 connected to a conventional radio section 132 for receiving and sending messages." (Eck, 6:34-36; *see also* Eck, 7:36-53 (describing a pager cartridge includes a codec/DSP section, bandpass filter, RF mixer and dual PLL section, crystal, transmitter, receiver, and antenna).) The radio section and/or antenna is an "*interface.*"

202. As discussed in more detail below, the applicable "mobile information channel" includes at least PagerWorld. The interface discussed above "controls activation" of PagerWorld by facilitating connection to, and startup of, PagerWorld on the "portable game machine." For example, Eck discloses that "[a] user interface enables a user to provide inputs to the game machine and a processing system is operable in response to user inputs to cause the image captured by the digital camera to be transmitted as part of a message via the paging system." (Eck, 2:18-22.) Likewise, Eck notes that "[g]ame machine interface 908 interfaces game machine 10 to the communication circuitry of the pager cartridge and the mask ROM 910 of the pager cartridge." (Eck, 7:61-64.)

203. Thus, Pelkey in combination with Eck "*provid[es] an interface*" and "*permit[s] a first user to control activation of a mobile information channel*."

(2) "mobile information channel"

204. The combination of Pelkey and Eck discloses a "mobile information channel" having the claimed capabilities. Eck discloses that the messaging cartridge includes a memory "storing software used" in the messaging (e.g., pager) operations and "one or more video game programs that are executable by CPU 26 of game machine 10." (Eck, 7:7-22.) In addition to messaging (e.g., paging functions), the messaging cartridge "can be used in game playing." (Eck, 9:60-61.) An example of a gaming application is "Multiple User Dungeon (MUD) games" which are "Internet-based on-line exploration and quest games in which an open-ended number of players simultaneously exist in the same game world, sharing experiences and adventures." (Eck, 10:2-7.) "[K]ey components" of such games include "exploration and adventure," "**chat and community interaction**," and "character growth and perpetual, dynamic worlds that grow, adapt and change." (Eck, 10:13-19.)

205. An exemplary MUD game described by Eck is "PagerWorld, a virtual community for the network of **all users having pager cartridges**." (Eck, 10:20-23.) Although Eck uses the word "PagerWorld" in the MUD title to reflect the communication means is paging, a POSITA would have understood that such a MUD is equally applicable when the communication means is another messaging

type such as SMS or messaging via a WAP protocol. PagerWorld includes client software in the portable game machine (client program) and corresponding software in the server (server program). (*See* Eck, 4:61-5:7, 9:40-59.) As such, PagerWorld is persistent—it remains in existence after individual users exit the world. PagerWorld is therefore a "*mobile information channel*" under any of the proposed constructions in the MDT-Meta-Litigation or the Meta-MDT-IPR. For example PagerWorld is "a medium for transferring information that allows mobile device users to author content" under the construction proposed by Patent Owner in the MDT-Meta-Litigation and by Meta in the Meta-MDT-IPR. For example, users can import images taken using the digital camera that is part of the "portable game machine" when a camera cartridge is inserted into PagerWorld and use such images to customize their persona. (*See* Eck, 12:38-40.)

206. Pelkey likewise discloses that a digital camera can be attached to its portable game machine. (Pelkey, 7:26-31.) Indeed, both Pelkey and Eck incorporate by reference the same Nintendo patent disclosure describing the camera in detail. (Pelkey, 7:26-31 *citing* U.S. 6,435,969; Eck, 23:41-48 *citing* Ser. No. 09/430,169.) For these same reasons, the combination of Pelkey and Eck also discloses "a virtual location at the content management site at which user-authored content may be added for transmission to the mobile web site" where "content management site" = "a web site that allows a user without programming to create and manage content on

a mobile website, or a portion thereof" under Meta's proposed construction in the MDT-Meta-Litigation.

207. And the Message Center and persona characters within PagerWorld are each a "component of a mobile site configured to permit a wide variety of mobile devices to send and receive content over a wireless network" under Patent Owner's proposed construction in the Meta-MDT-IPR.

(3) "Activation of [the] Mobile Information Channel"

208. The combination of Pelkey and Eck discloses "*activation of [the] mobile information channel*." For example, Eck discloses that:

> FIG. 7 is a conceptual block diagram of an interface for pager cartridge 100 when it is connected to game machine 10. Turning on pager cartridge 100 when it is connected to game machine 10 takes the player to a main PagerWorld screen 200. This screen is the starting point for every user session.

(Eck, 10:55-60.) Figure 7 is reproduced below:

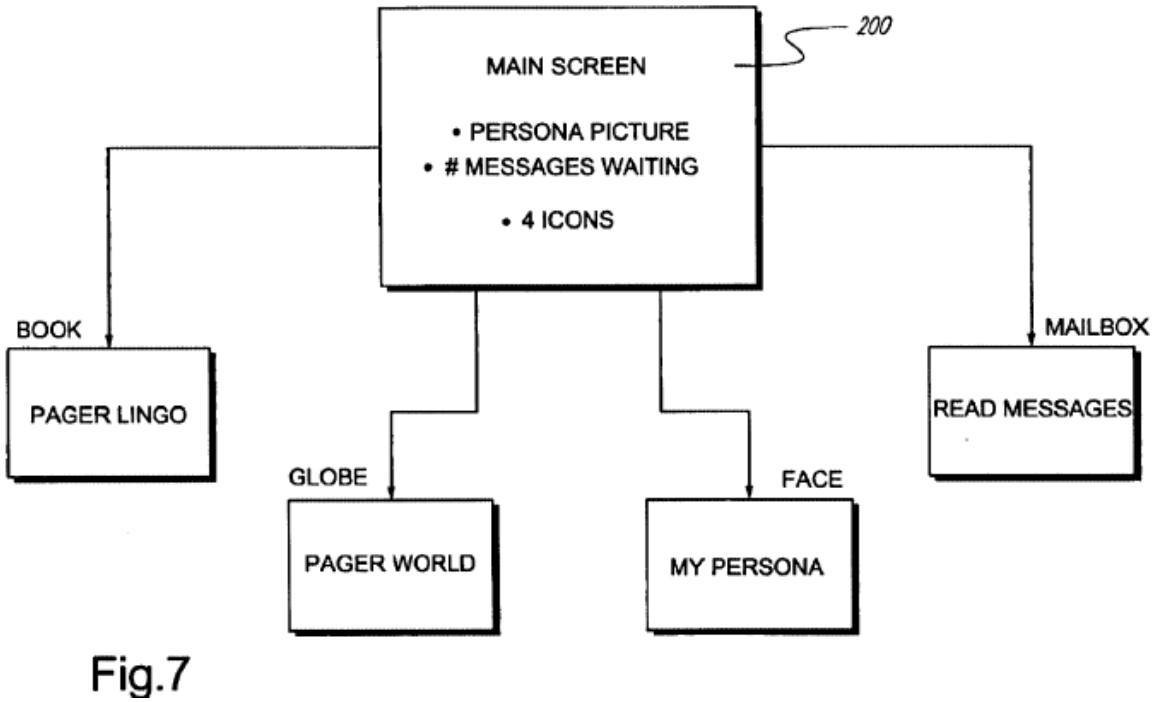

Eck, Figure 7

209. Once the "user session" is started, the user is taken to a "main screen" which gives the player choices including, as shown in Figure 8A, "Icon 206 ('My Persona') [which] is a face; icon 208 [which] is a book ('Pager Lingo'); icon 210 [which] is an unopened envelope ('Message Center'); and icon 212 [which] is a globe ('PagerWorld')." (Eck, 10:65-11:7.) Figure 8A is reproduced below:

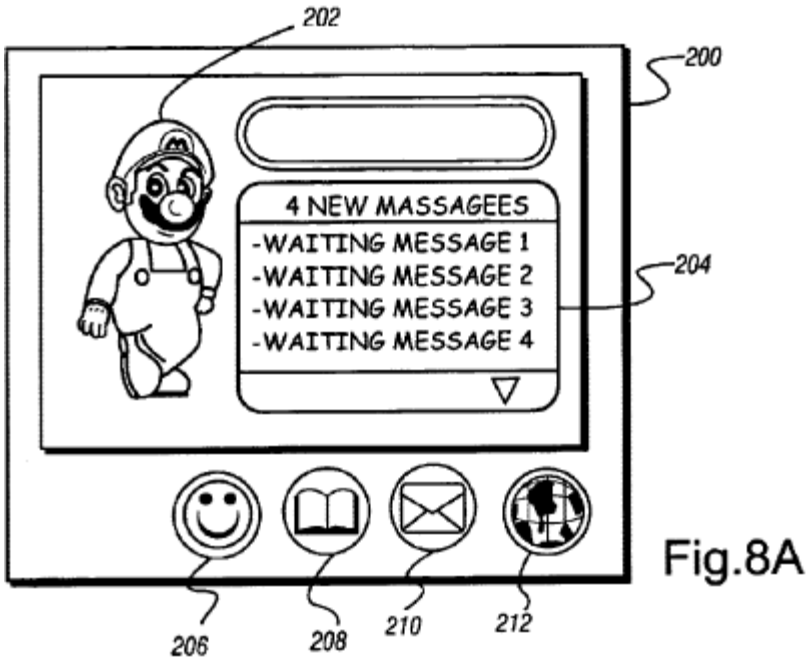

Eck, Figure 8A

210. Thus, the combination of Pelkey and Eck "*provide[s] an interface permitting a first user to control activation of a mobile channel*" [1A]. By allowing a user to select an icon which facilitates sharing of images (My Persona) or exchanging messages (Message Center), Eck discloses "*activating the mobile information channel responsive to input received from the first user via the interface*" [1B].

211. In addition, Eck further discloses that "[a]n activation routine via one or more messages communicated between the system operator and the player's pager cartridge may be implemented so that the pager cartridge's unique hardware identification is logged into the system. Upon a successful execution of the

activation routine, pager cartridge 100 operates immediately without any paperwork, advance payments or commitments on the part of the player." (Eck, 18:10-17).

212. The combination of Pelkey and Eck also discloses inserting and/or sharing content into the mobile information channel. Eck discloses that "a game machine is provided with … digital camera circuitry configured to capture an image." (Eck, 2:16-18.) For example, Eck discloses that a messaging cartridge (e.g., pager cartridge), "is itself provided with a slot for receiving" another cartridge. (*See, e.g.*, Eck, 5:23-25.) One example of a "piggy-backed" cartridge is a "digital camera cartridge," illustrated in Figure 14 (below): "pager cartridge 100 itself includes a built-in cartridge slot to accept game cartridges or other accessories (such as read/write memory cartridges, a digital camera, etc.), thereby enabling game play or digital camera operations while pager cartridge 100 is attached to game machine 10." (Eck, 22:14-20; *see also* Eck 23:36-38 ("digital camera cartridge is also selectively insertable … into the slot of another cartridge such as pager cartridge 100").)

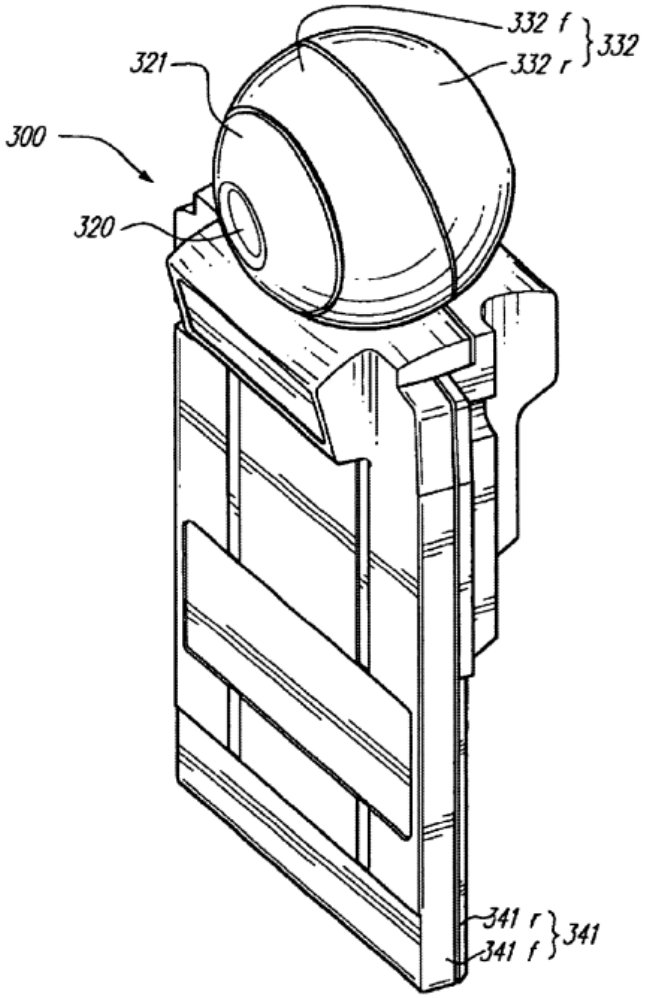

Eck, Figure 14

213. The portable game machine having an inserted messaging cartridge and an inserted camera cartridge captures content. Eck's digital camera cartridge "is usable to **capture images**, which images may then be transmitted to others via an operation using" the messaging cartridge into which the camera cartridge is inserted. (Eck, 23:38-41; *see also* Eck, 2:15-18 ("a game machine is provided with … digital camera circuitry configured to capture an image").) The "digital camera cartridge" may also be "configured to **capture sounds** [and] these captured sounds may be

used by game machine 10 and/or transmitted as a message using pager cartridge." (Eck, 9:20-23.)

214. In addition to the camera cartridge, Eck discloses other cartridges that can be piggybacked with the messaging cartridge to capture content. For example, Eck discloses that "a separate 'sound card' may be 'piggy-backed' to game machine 10" via the messaging cartridge. (Eck, 9:23-25.) Eck further discloses a "global positioning system (GPS) cartridge" that captures "user portion information" (i.e., user location). (*See* Eck, 22:28-29.)

215. In the combination of Pelkey and Eck, the captured content (photos/images, sounds/audio files) can be inserted or shared in PagerWorld. PagerWorld supports transmission of messages "with images and sound bytes to other pagers in the network using, for example, a digital camera cartridge in combination with a pager cartridge." (Eck, 16:42-45; *see also* Eck 24:30-36 ("the images stored in the read/write memory of digital camera cartridge 300 may be transmitted to other [sic] using the radio circuitry of pager cartridge 100"), 2:15-23 (inputs "cause the image captured by the digital camera to be transmitted as part of a message").) In addition to photos/images, the message can include sounds (audio file). (Eck, 20:12-14 (discussing messages containing "digital camera picture transmission (with/without sound)" and "messages plus sound bites"), 21:47-48

("Digital images can be exchanged and optionally supplemented by sound bites from a sound dictionary").)

216. Such a message can be sent through the Message Center accessed through an icon on the main screen. (Eck, 11:26-28.) While in the Message Center (e.g., screen illustrated in Figure 8C (below-left)), a user activates the quill icon 236 to navigate to the "Compose Message screen 290" of Figure 8F. (Eck, 11:37-38.) The "send to" window 292 "allows the user to choose to whom the message will be sent." (Eck, 12:10-11.) A user can opt to send the message to an individual, to a pre-defined group (e.g., a buddy list), (Eck, 20:9), or as a broadcast to all messaging devices in PagerWorld, (Eck, 20:8, 9:46-49 ("messages from the paging system operator may be sent to all users in the paging system, to certain groups of users in the paging system or to a particular user in the paging system")). For group messaging, Pelkey teaches that the messaging service client "allows the user to create a list ('buddy list') of other users ('buddies') with whom he/she wishes to remain in contact." (Pelkey, 7:33-35.) The buddy list "is stored by the network server." (Pelkey, 7:35-36.) In the combination of Pelkey and Eck, the PagerWorld user can identify a "buddy list" in the "send to" window to send a "carbon copy" of the message.

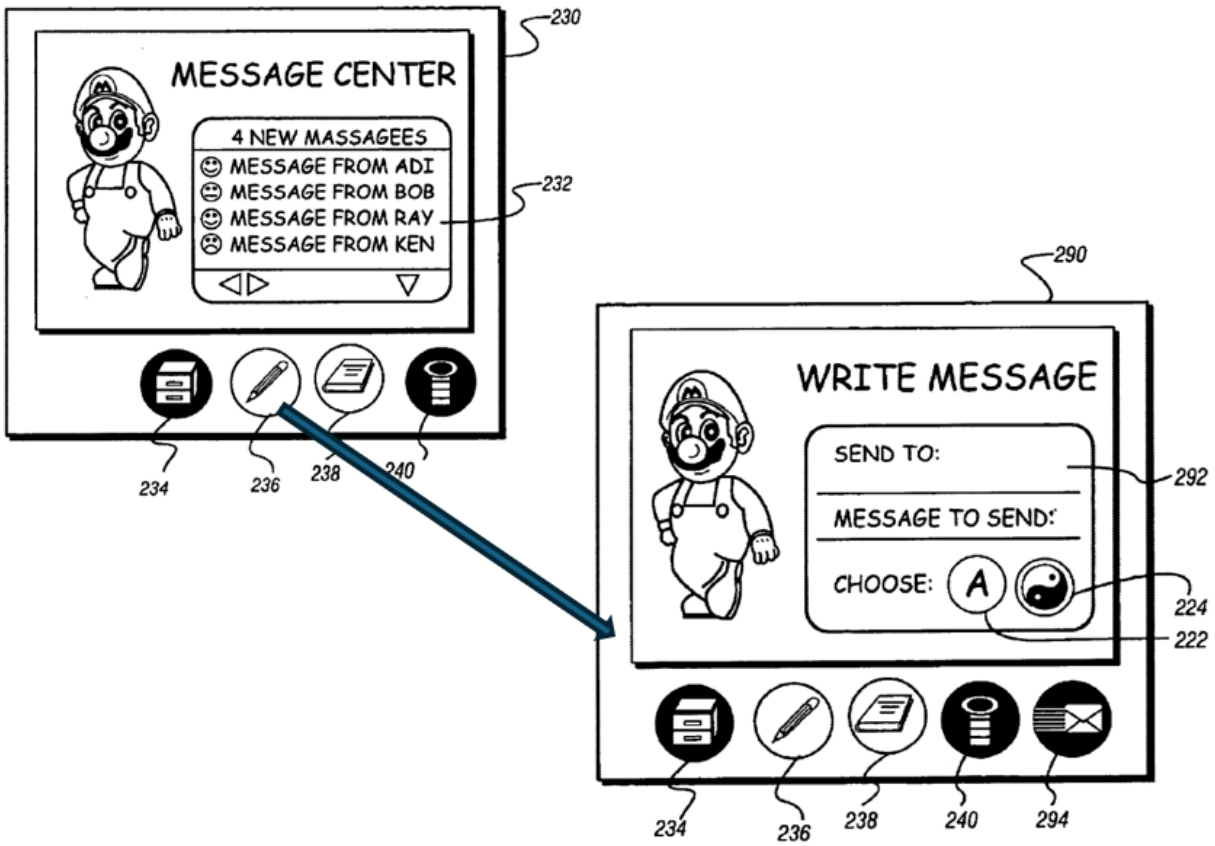

Eck, Figure 8C (left), Figure 8F (right)

217. PagerWorld includes a "Message Center" that "permits users, among other things, to read their messages and to compose and send new messages. The Message Center screen features a window **232** that lists unread messages." (Eck, 11:27-31.) "When a message is selected from Message Center screen, the contents of the message appear, along with the user's persona character and 'handle' of the person that sent the message." (Eck, 11:53-57; *see also* Eck, 12:36-38 ("Any time the user sends a message, his/her persona character appears alongside the message on the other user's screen.").)

218. PagerWorld also supports insertion of captured data into PagerWorld through personalization of a user's person character. Players in PagerWorld are represented "by a 'persona character' and it is this character that all other PagerWorld players will see." (Eck, 10:23-25.) As I discussed above, the user's persona is a feature element on the PagerWorld screens and "function[s] as a sort of 'pager' tour guide." (Eck, 10:62-64.) A user's persona is shared with other members of the PagerWorld community: "the contents of the message appear, along with the user's persona character and 'handle' of the person that sent the message." (Eck, 11:54-57.) The user's address book is a list of "other users by their handles," and next to the user's handle "is the persona character of the other user as it appeared on his/her last communication with the user." (Eck, 12:16-19.)

219. A user can customize their persona. The messaging service client (PagerWorld client program) "provides the user with an opportunity to create a user profile that is stored in memory of network server 14." (Pelkey, 7:9-11.) The users may be "provided with the capability of including in their profiles customized faces (images) made up of various user-selected features" or "digital images of their own faces" to "enhance the 'persona' of the user." (Pelkey, 7:20-27.) For example, in Eck, the "persona character" can be "customize[d] … using image data obtained with a digital camera cartridge." (Eck, 12:38-40.) The persona character, is stored, in the combination at the network server. In addition to including the persona

character in messages, in the PagerWorld game universe, players "walk their persona characters in a world featuring attractions and sideshows." (Eck, 10:38-40, 13:29-31 (during game play "the player may control his/her persona character to fight, flee or use some item in the player's possession").) Thus, the image (persona) "*is insert[ed]*" into PagerWorld for inclusion in the virtual world and message exchanged between players.

220. The combination of Pelkey and Eck thus discloses "*inserting content provided by the first user into the mobile information channel*" [1C].

c) Limitations [1D]-[1E]

[1D] receiving additional content relating to the mobile information channel from one or more of said additional users via one or more respective mobile devices associated with at least one wireless network;
[1E] inserting at least a portion of the additional content into the mobile information channel

221. The combination of Pelkey and Eck discloses that the server "*receiv[es] additional content relating to the mobile information channel from one or more of said additional users*" [1D] and "*insert[s] at least a portion of the additional content into the mobile information channel*" [1E]. Such actions occur in Eck when a second PagerWorld user uses her own device (either another portable game machine or a fixed N64 console) to send a message including a photo/image or sound clip. Upon such action, a user receives content, at the portable game machine via the identified application-based information channel, from at least one of the additional users when

receiving a message containing the other user's customized persona avatar or accessing an address book listing other users along with their customized persona avatars. This is reflected in Figure 8C below which depicts content received from other users within PagerWorld ("*mobile information channel*").

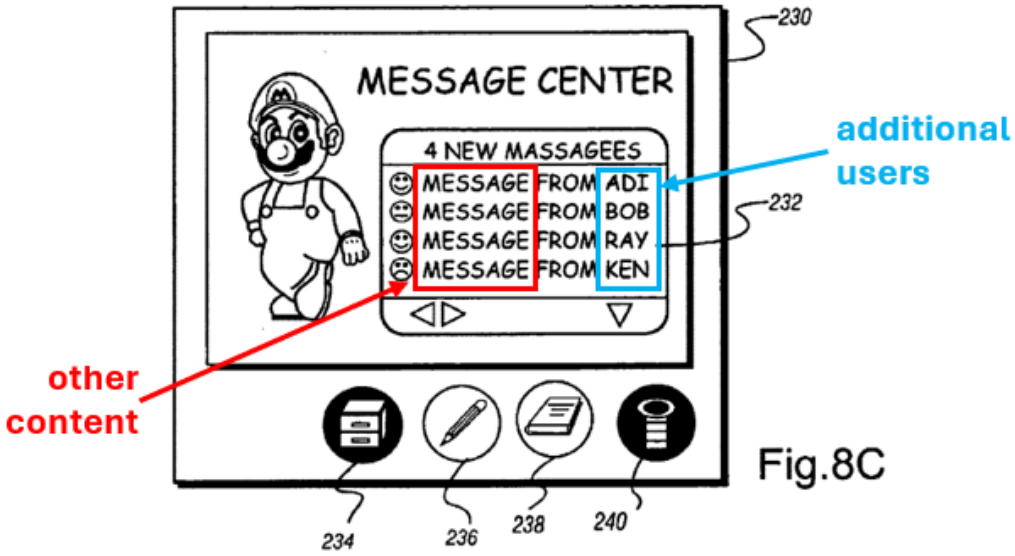

Eck, Figure 8C

(1) "Mobile Devices Associated with at Least One Wireless Network"

222. PagerWorld is designed for use by wireless information devices, namely, the Nintendo GameBoy®, which as I explain below are "*mobile devices associated with at least one wireless network.*" As an initial matter, and as I noted in Ground 1, I understand that several constructions of the term "mobile device" have been proposed in the MDT-Meta-Litigation and in the Meta-MDT-IPR. As I noted in that section, the term does not require construction in the present IPR

because both Pelkey and Eck discloses a "*mobile device*" under any reasonable interpretation of the term.

223. Specifically, both Pelkey and Eck disclose a "portable game machine and, more particularly, to a **portable game machine** that is selectively configurable for one or more different operations such as **wireless communications**, global positioning, image capturing and combinations thereof." (Eck, 1:12-16, Fig. 1B (below); *see* Pelkey, 4:55-57 ("FIGS. 3A, 3B and 3C show a portable (hand-held) color-display game system 110"), Fig. 3B.) An exemplary game machine is the "GameBoy® Color game machine," (Eck, 3:29-33; *see* Pelkey, 4:66-67), a commercially available product widely known by the general public and those skilled in the art as of the earliest possible priority date.

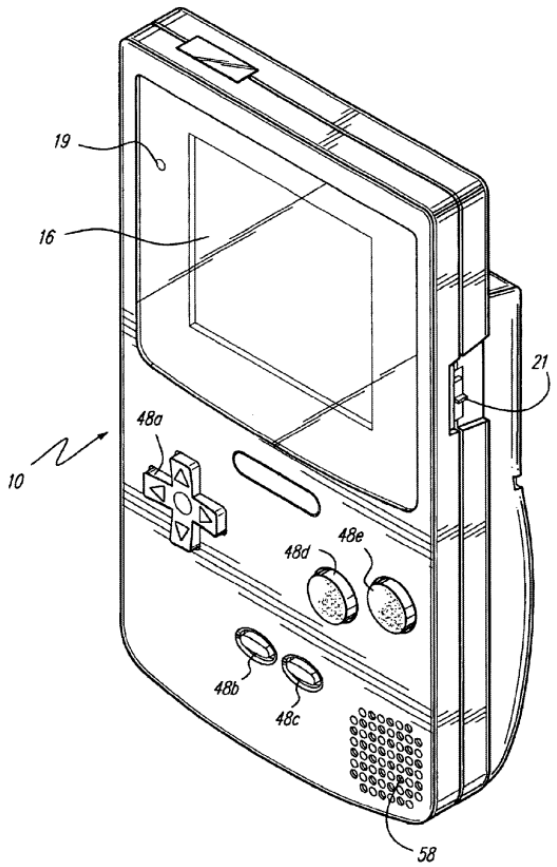

Eck, Figure 1B

224. The portable game machine described by both Pelkey and Eck is a "piece of handheld equipment" and therefore a "*mobile device*" under PO's MDT-Meta-Litigation construction. This portable game machine processes information and is capable of being configured for communication over a network, as I discussed above. Thus, the portable game machine is a "*mobile device*" under Meta's MDT-Meta-Ligation and Meta-MDT-IPR constructions. Finally, as illustrated by Eck's Figure 1B, the portable game machine has limited display space and because it lacks a physical or soft keyboard, a POSITA would have understood the portable game

machine also has limited navigational capabilities. Thus, the portable game machine is also a "*mobile device*" under PO's Meta-MDT-IPR construction ("a portable device with limited display space and limited navigational capabilities that connects to a mobile site and/or mobile channel via a wireless network").

225. The '801 patent refers to "messaging, distributed collaboration, and location-based services" as examples of "wireless networking functionality." (EX-1001, 1:37-39, 1:56-58.) Both Pelkey and Eck are directed to a messaging service provided using a portable game machine as I have discussed above. Pelkey discloses a network "in which the messaging service" may be implemented. (Pelkey, 2:58-60.) The network "includes game systems 10 connected via communications circuits 12 (e.g., modems, network interfaces, etc.) to a wide area network 16 such as the Internet." (Pelkey, 2:60-62.) Pelkey explains that game system 10 may be a video game system, such as the N64 video game system, connected to a television. (*See* Pelkey, 3:38-48.) Game system 10 may also be the portable game machine 110. (Pelkey, 4:55-57.) I reproduced Pelkey's Figure 1A below with the game system 10 on the left using the N64 game system illustrated in Pelkey's Figure 2 and the game system 110 on the right using the portable game machine in Eck's Figure 1B. I have also illustrated the connection from the N64 game system to the server via the Internet as taught by Pelkey.

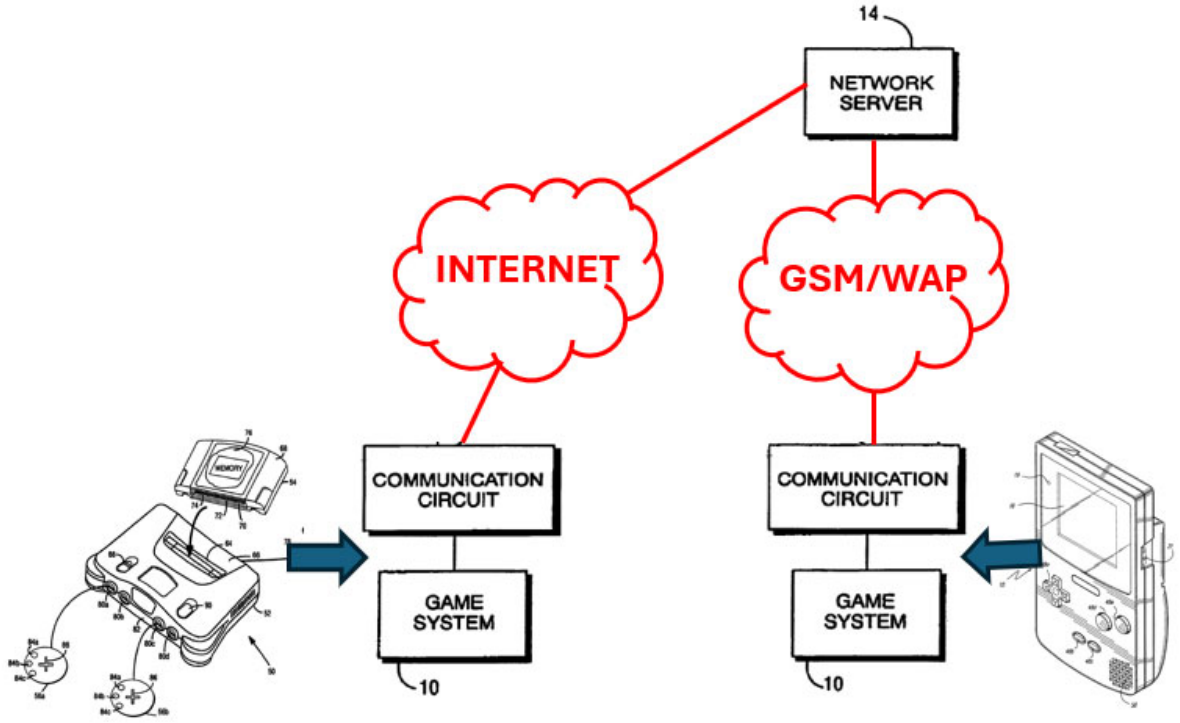

Pelkey, Figure 1

226. Pelkey does not disclose details of the wireless network used to provide wireless messaging from the game system to the server. However, while Eck mentions use of a paging network for this functionality, Eck also explicitly discloses that its "present invention" may be "applied to other wireless technologies such a GSM (Global System for Mobile Communications) and WAP (Wireless Application Protocol)." (Eck, 25:17-20.) A POSITA would have been motivated to use either GSM or WAP for the messaging service, rather than paging, to obtain the enhanced features of those protocols. Based on Eck's disclosure, a POSITA would have

understood that the portable game machine communicates with the server via messaging available via the GSM network (e.g., SMS) or messaging available via WAP.

227. GSM-SMS is "functionality implementable over a wireless network" and as shown in my modified Figure 1 of Pelkey, the GSM network is separate from the Internet connecting the N64 game system to the server. As I discussed in §IV.A.1, the WAP protocol stack transports data over GSM's SMS. I provided an overview of a mobile originated message in SMS in a GSM network in my analysis of this limitation in Ground 1. As discussed in that section, the SMS message includes a header with data fields indicating control and content details for the message.

228. Thus, to send a message, the portable game machine determines this information to construct the GSM-SMS message. Figure 8C from Eck confirms that this information is determined. Specifically, this figure depicts the Message Center user interface screen presented to the player which shows a list of unread received messages with each message including the sending user's name and associated persona image.

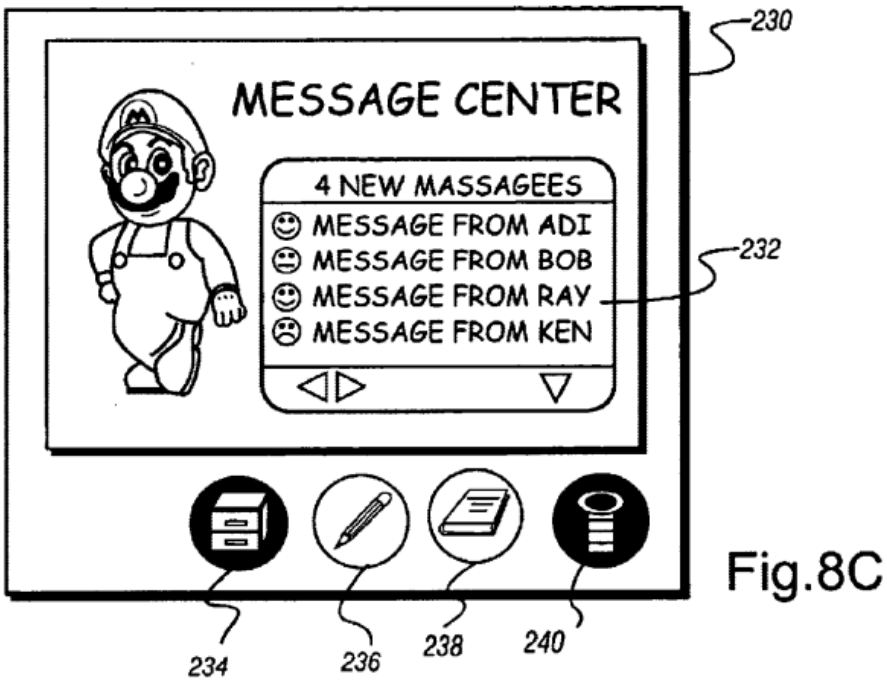

Fig.8C

Eck, Figure 8C

229. As I discussed in §III.D.3, the term "*wireless network*" was also proposed for construction in the Meta-MDT-IPR. MDT contends that a "*wireless network*" is "a network separate from the internet that facilitates connection to the internet by a mobile device." As noted above, while I disagree with that construction, the combination of Pelkey and Eck discloses such a "*wireless network*" because, as discussed above, the wireless network is depicted as separate from the internet and through the use of WAP, a mobile device has the ability to access the internet. Meta proposes that the term should be construed as "a network that allows a device to communicate wirelessly over a network." The listed networks are each a "*wireless*

network" under Meta's construction. The combination of Pelkey and Eck thus discloses "*mobile devices associated with at least one wireless network.*"

d) "Integrating" Limitation [1F]

[1F] integrating into the mobile information channel information associated with at least one wireless networking functionality of said at least one wireless network.

230. The combination of Pelkey and Eck discloses this limitation for the same reasons set forth above regarding the "mobile devices associated with at least one wireless network" limitation. (*Supra* §V.B.1.c.) As noted above, the WAP protocol stack transports data over GSM's SMS. I provided an overview of a mobile originated message in SMS in a GSM network in my analysis of this limitation in Ground 1. (*Supra* §IV.B.1.d.) As discussed in that section, the SMS message includes a header with data fields indicating control and content details for the message. For the reasons I discussed in §V.B.1.c, these fields, associated with the action of sending a message over the wireless network, are "*information associated with at least one wireless networking functionality of said at least one wireless network.*"

(1) Wireless Networking Functionality

231. The combination of Pelkey and Eck discloses "*wireless networking functionality of said at least one wireless network.*" As noted above, the '801 patent refers to "messaging, distributed collaboration, and location-based services" as

examples of "wireless networking functionality." (EX-1001, 1:37-39, 1:56-58 ("integration of messaging, collaboration, location-based services or other wireless networking functionality with the generation of shared information content").) The '801 patent also mentions that the "services integration suite 38 includes an MMS center 70, an SMS center 71, email systems 72, billing systems 73, voice systems 74, and other systems 75, each of which may be viewed as **representative of a particular type of wireless networking functionality** accessible to the mobile devices 15 via the wireless network 12." (EX-1001, 9:48-53.)

232. As likewise noted above, Eck explicitly discloses that its "present invention" may be "applied to other wireless technologies such a GSM (Global System for Mobile Communications) and WAP (Wireless Application Protocol)." (Eck, 25:17-20.) A POSITA would have been motivated to use either GSM or WAP for the messaging service, rather than paging, to obtain the enhanced features of those protocols. Based on Eck's disclosure, a POSITA would have understood that the portable game machine communicates with the server via messaging available via the GSM network (e.g., SMS) or messaging available via WAP.

233. GSM-SMS is "functionality implementable over a wireless network" and the GSM network is separate from the Internet connecting the N64 game system to the server. Thus, the combination of Pelkey and Eck discloses "*wireless networking functionality*."

234. The combination of Pelkey and Eck discloses "*information associated*" with a functionality implementable over a wireless network by a mobile device (e.g., via WAP or via GSM-SMS). As above, I address limitations [1F] and claims 7-8 together in this section.

a) Messaging

235. As I noted above, the '801 patent lists messaging (MMS, SMS, email) as an example of a "*wireless networking functionality*." (EX-1001, 1:37-39, 1:54-58, .) Claim 7 (reproduced below) which depends from claim 1 recites that the information comprises "*one or more messaging actions implementable over the wireless network*."

[1F] integrating into the mobile information channel information associated with at least one wireless networking functionality of said at least one wireless network
7. The method of claim 1 wherein the information associated with at least one wireless networking functionality of said at least one wireless network comprises one or more messaging actions implementable over the wireless network.

236. The combination of Pelkey and Eck describes "*at least one wireless networking functionality of the mobile device*"—messaging.

237. Messages are read, composed and sent from the "Message Center" inside PagerWorld. (Eck, 11:27-29.) "Message Center" includes an "Address Book" that "provides a listing of other users by their handles" and "the persona character of the other user as it appeared on his/her last communication with the user." (Eck,

11:32-35; *see* Eck, 12:16-19.) "Messages from the paging system operator may be sent to all users in the paging system, to certain groups of users in the paging system or to a particular user in the paging system." (Eck, 9:46-49.) Figure 8C in Eck depicts the Message Center user interface screen presented to the player which shows a list of unread received messages with each message including the sending user's name and associated persona image.

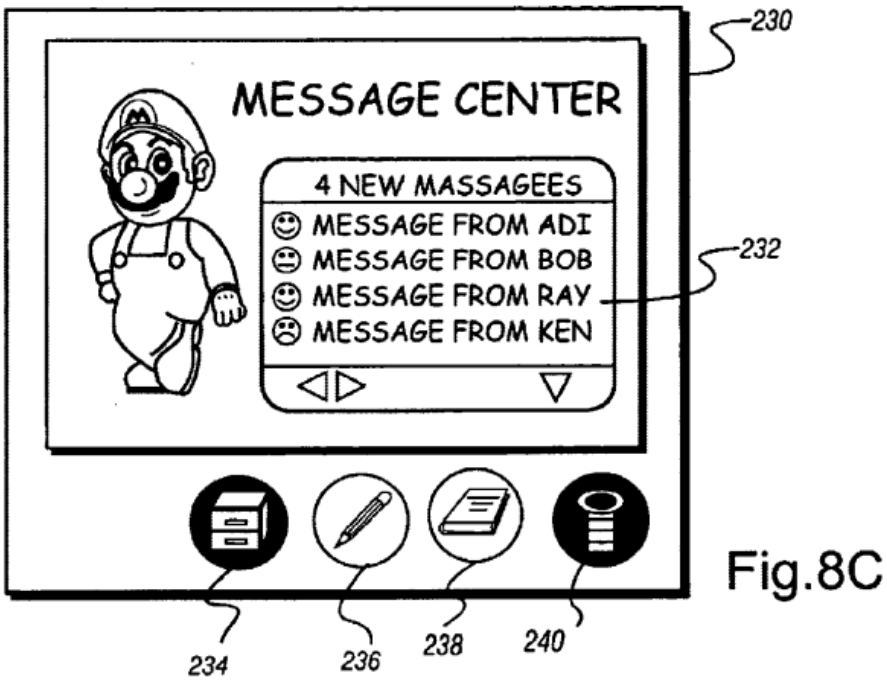

Eck, Figure 8C

238. As noted above, Eck discloses that its "invention" can be used with wireless technologies such a GSM (Global System for Mobile Communications) and WAP (Wireless Application Protocol)." (Eck, 25:17-20.)

239. Like Randall and Forsyth, neither Pelkey nor Eck provides the details of the wireless messaging functionality of GSM-SMS or WAP. I provide above a high-level overview of the protocol message used for GSM-SMS and WAP. (*Supra* §IV.B.1.d.(1).a.)

240. For the same reasons as above (*supra* §IV.B.1.d), the GSM protocol includes fields associated with the action of sending a message over the wireless network and are therefore also "*information*" associated with "*wireless network functionality*" by inclusion in the protocol message originated by the sending mobile device. Messages transmitted via WAP will include the same additional information

* * *

241. The combination of Pelkey and Eck also "*integrat[es] information*" associated with a "*messaging action*." For example, Eck discloses the use of "[n]otification circuitry 134 [which] provides notification to the user that a message has been received. Notification circuitry 134 may be implemented as a vibration circuit that is controlled by control circuit 136 to vibrate when a message is received. Notification circuit 134 may alternatively or additionally be implemented as a beeper circuit that is controlled by control circuit 136 to beep when a message is received." (Eck, 6:43-46.) Sender information (e.g., "ADI," "BOB," "KEN," as shown in Figures 8C and 8E) is integrated along with the message-related information.

242. Thus, the combination of Pelkey and Eck discloses "*integrating into the mobile information channel information associated with at least one wireless networking functionality of said at least one wireless network*" [1F] where "*the information associated with at least one wireless networking functionality of said at least one wireless network comprises one or more messaging actions implementable over the wireless network*" [7].

b) Collaboration

243. As I noted above, the '801 patent lists collaboration as an example of a "*wireless networking functionality*." (EX-1001, 1:37-39, 1:54-58.) Claim 8 which depends from claim 1 recites the information comprises "*one or more collaboration actions implementable over the wireless network*."

[1F] integrating into the mobile information channel information associated with at least one wireless networking functionality of said at least one wireless network
8. The method of claim 1 wherein the information associated with at least one wireless networking functionality of said at least one wireless network comprises one or more collaboration actions implementable over the wireless network.

244. The combination of Pelkey and Eck discloses this limitation.

245. PagerWorld "*integrat[es] information*" comprising a "*collaboration action*" in game play. For example, Eck discloses that "[a]s players interact with other players in PagerWorld (e.g., by sending messages and playing games), players

will share the fun and excitement of discovering new items, skills and appearances as their persona characters gain experience." (Eck, 10:27-31.)

246. In addition, among the types of games that can be played in PagerWorld are "[t]eamwork-based adventures requiring input from multiple players with complementary skills." (Eck, 13:40-45.) For example, a user can solicit an intervention from another user by sending a message "requesting help from a friend playing the same game. A player could, for example, request a ladder to climb a wall to gain a prize or level or request more ammunition to fight enemies." (Eck, 14:11-26.) Thus, the combination of Pelkey and Eck discloses "*integrating into the mobile information channel information associated with at least one wireless networking functionality of said at least one wireless network*" [1F] where "*the information associated with at least one wireless networking functionality of said at least one wireless network comprises one or more collaboration actions implementable over the wireless network*" [8].

2. Independent Claim 22

22. A non-transitory computer-readable storage medium having embodied therein executable code of one or more software programs for use in managing information content in a network-based communication system, wherein said executable program code when executed by a processing element of the communication system implements the steps of the method of claim 1.

247. The combination of Pelkey and Eck discloses this limitation.

248. Eck explains that a cartridge including messaging functionality (e.g., a pager cartridge) "is provided for use with a game machine having a game program executing processing system including a microprocessor." (Eck, 1:61-63.) The messaging cartridge "includes a memory 145 for storing software used in the pager operations." (Eck, 7:7-9.) Pelkey similarly discloses "[a] messaging service client is implemented by program code contained in an application (e.g., a video game, a web browser) executed by the game system." (Pelkey, 1:42-44.)

249. The inserted messaging cartridge includes ROM 42 which "contain[s] instructions" pertaining to, e.g., the messaging function. (*See, e.g.*, Eck, 4:5-6, 7:7-12 ("[p]ager cartridge 100 includes a memory 145 for storing software used in the pager operations … [i]t is of course possible to store the software for implementing at least some of these operations in the memory of game machine 10").) When inserted, the "game machine circuitry [] access[es] information contained with ROM 42 (and read/write memory 46), which information controls the game machine … under control of the ROM game program information." (Eck, 4:9-20.) The game machine 10 then "automatically activates a display of messages on the display thereof in accordance with the operating software stored in the memory of the pager." (Eck, 22:10-14.)

250. Therefore, the combination of Pelkey and Eck discloses "*non-transitory computer-readable storage medium having embodied therein executable*

code of one or more software programs for use in managing information content in a network-based communication system, wherein said executable program code when executed by a processing element of the communication system implements the steps of the method of claim 1"

3. Independent Claim 23

a) Preamble [23P]: "apparatus"

251. The combination of Pelkey and Eck discloses a server; an "*apparatus*" [23P].

b) Server Architecture Limitation [23A]

[23A] a processing element comprising a processor coupled to a memory;

252. "Apparatus" claim 23 further includes limitation [23A] which recite the high-level architecture of the "*apparatus.*"

253. The combination of Pelkey and Eck discloses "*a processing element comprising a processor coupled to a memory.*" Eck explains that a cartridge including messaging functionality (e.g., a pager cartridge) "is provided for use with a game machine having a game program executing processing system including a microprocessor to execute a video game program and player controls operable by a player to generate video game control signals." (Eck, 1:60-65; *see also* Pelkey, 6:44-46 ("program contained in cartridge 112 [] includes program code for a messaging service client").) This arrangement is illustrated in Eck's Figure 2 (below) showing

the portable game machine with an inserted cartridge. I note this figure which is identical to Pelkey's Figure 4.

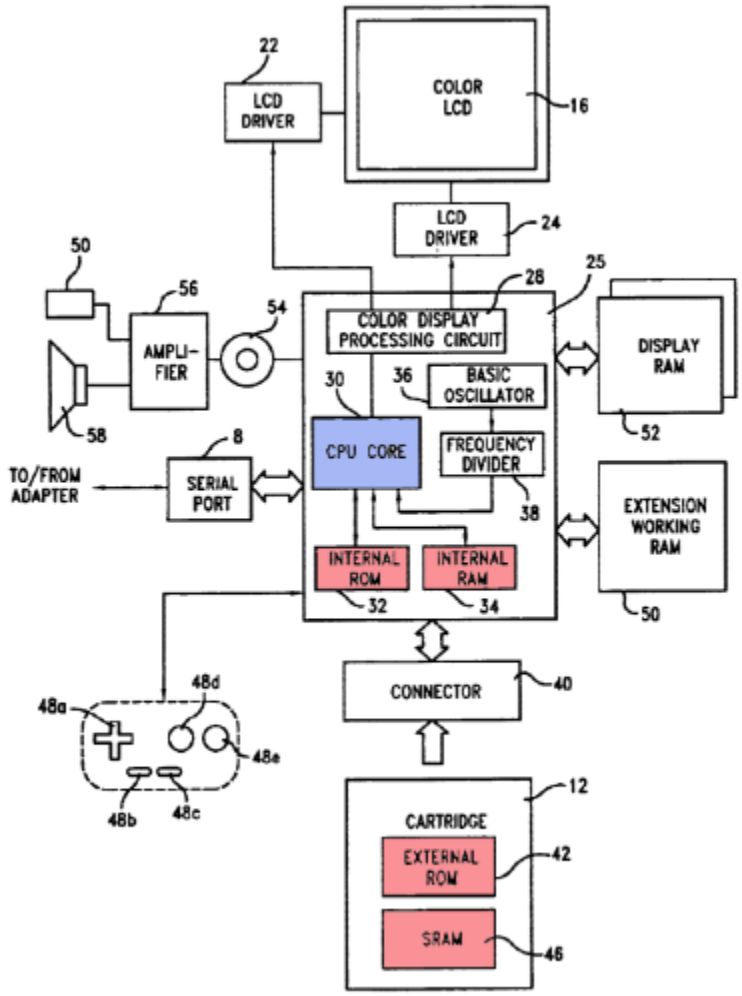

Eck, Figure 2

254. As shown above, the "game machine 10" includes "a central processing unit (CPU) 26 [mislabeled as 25 in Fig. 2 above]," which "further includes a CPU core 30 [shaded blue] that is connected to an internal read only memory (ROM) 32 and an internal random access memory (RAM) 34." (Eck, 3:42-46.) Eck explains that "[i]nternal RAM 34 is used as a work memory of CPU core 30." (Eck, 3:46-47.)

For example, when executing a game program, "character data supplied from game cartridge 12 and the controller data from operating keys 48a–48e, CPU 26 executes data processing and writes display data into a display RAM 52, using an extended RAM 50 when necessary" in accordance with the game program. (Eck, 4:46-50.) CPU 26 is the "*processor*"; ROM 50 and RAM 52 (shaded red) are "*memory*"; and as shown each of ROM and RAM is coupled to the processor.

255. Should PO contend that the recited "*memory*" in the "*processing element*" must store instructions executed by the "*processor*," I disagree, but the combination of Pelkey and Eck discloses this arrangement, as would any device running software. In the portable game machine illustrated above, the inserted cartridge includes ROM 42 which "contain[s] instructions" pertaining to, e.g., the messaging function. (*See, e.g.*, Eck, 4:5-6, 7:7-12 ("[p]ager cartridge 100 includes a memory 145 for storing software used in the pager operations … [i]t is of course possible to store the software for implementing at least some of these operations in the memory of game machine 10").) When inserted, the "game machine circuitry [] access[es] information contained with ROM 42 (and read/write memory 46), which information controls the game machine … under control of the ROM game program information." (Eck, 4:9-20.)

256. Moreover, it would have been within the general knowledge of a POSITA that a server includes "*a processor coupled to a memory*" for the reasons discussed above. (*supra* §IV.B.3.b.)

c) Processing Limitations [23B]-[23G]

257. Limitations [23B]-[23G] recites substantially overlapping subject matter as limitations [1A]-[1F] as indicated in my table above. For the reasons in §§V.B.1.b-d, the combination of Pelkey and Eck discloses these limitations.

4. Independent Claim 25

a) Preamble [25P] and "Plurality of Servers" [25A]

258. The combination of Pelkey and Eck discloses a "*network-based communication* system" [25P] comprising "*a plurality of servers configured to communicate over the network*" [25A]. For example, Figure 1B in Pelkey (below) discloses an embodiment that includes a "Messaging Service Server" 18 and a "Network Server" 14 that communicate over the internet (depicted as "WAN" 16). The "Message Service Server" and "Network Server" together comprise a "*plurality of servers*."

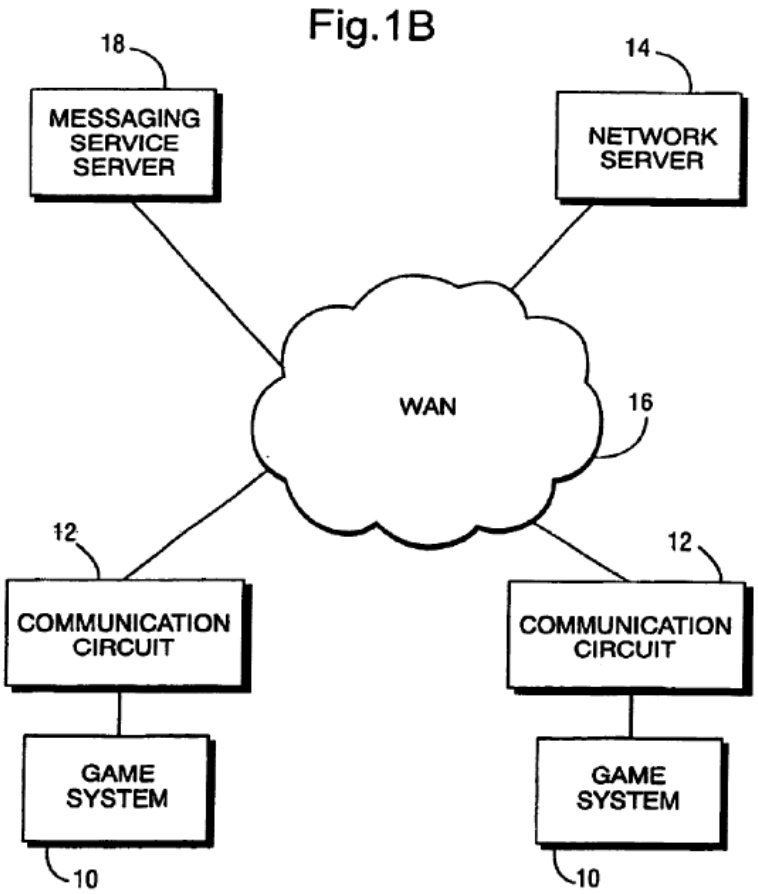

Pelkey, Figure 1B

b) Processing Limitations [25B]-[25G]

259. Limitations [25B]-[25G] recites substantially overlapping subject matter as limitations [1A]-[1F] as indicated in my table above. For the reasons in §§V.B.1.b-d, the combination of Randall and Forsyth discloses these limitations.

C. Dependent Claims

1. Claims 7-8

The Pelkey-Eck combination discloses claims 7-8 for the reasons discussed in §V.B.1.d.(1). (EX-1003, ¶154.)

2. Claims 9-10—"Content Integration"

9. The method of claim 1 further comprising providing one or more content integration options to the first user and the plurality of additional users.
10. The method of claim 9 wherein the one or more content integration options are based in part on respective wireless networking functionalities available to the first user and the plurality of additional users.

260. The combination of Pelkey and Eck discloses multiple "*content integration options*." As noted above, Pelkey discloses "a messaging service for communicating messages between and among users of video game systems." (Pelkey, 1:14-16.) And Eck discloses transferring images taken with an integrated digital camera into PagerWorld and sharing such photos with other users through customizing personas with the camera photos and attaching photos and sound clips to messages. (Eck, 12:38-40; *see also* Eck 16:42-45.)

261. Eck likewise discloses that "image and sound data may be compressed/decompressed in accordance with well-known compression/decompression techniques to more effectively utilize the available bandwidth." (Eck, 16:45-48.) A POSITA would understand the reference to "utilize the available bandwidth" to mean that content integration options are based in part on available wireless networking functionalities.

262. Thus, the combination of Pelkey and Eck "*provid[es] one or more content integration options to the first user and the plurality of additional users*" [9]

where "*the one or more content integration options are based in part on respective wireless networking functionalities available to the first user and the plurality of additional users*" [10].

3. Claims 11-12—"User-Activatable Control Mechanisms"

11. The method of claim 1 wherein the additional content is associated with the mobile information channel via one or more user-activatable control mechanisms.
12. The method of claim 11 wherein the one or more user-activatable control mechanisms comprise a hyperlink.

263. The combination of Pelkey and Eck discloses that the "*additional content is associated with the mobile information channel via one or more user-activatable control mechanisms*." As disclosed in Eck:

> Players read and send messages from the main PagerWorld screen, this screen serving as "communication central." From this screen, the player can choose a portal and actually step into a nation-wide or world-wide community of other PagerWorld players. PagerWorld is the hub for communications, becoming a central meeting place to find friends and share messages. Visually, it can be thought of as a carnival midway where players walk their persona characters in a world featuring attractions and sideshows.

(Eck, 10:32-40.) By choosing a specific portal into which they place, e.g., their persona character that has been customized using a photo taken with the integrated digital camera, Eck discloses additional content associated with PagerWorld via one or more user-activatable control mechanisms.

264. The combination of Pelkey and Eck also discloses "*the method of claim 11 wherein the one or more user-activatable control mechanisms comprise a hyperlink.*" As noted above, Eck discloses that its invention may be applied to wireless technologies including "GSM (Global System for Mobile Communications) and WAP (Wireless Application Protocol)." (Eck, 25:17-20.)

265. Use of WAP teaches or at least suggests that selection of a specific portal from the main PagerWorld screen constitutes selecting a "*hyperlink.*" WAP is "based on the WWW communication protocols" and "WWW content formats." (WAP Architecture, 13.) WAP "enables the supplying of advanced Internet services into digital mobile stations of wireless communication networks." (Salmi, 6:63-65.) The WAP proxy "allows content and applications to be hosted on standard WWW servers." (WAP Architecture, 14.) For example, when a user of a WAP-enabled terminal enters a URL, the WAP-enabled terminal transmits a wireless Internet service request to the WAP gateway server. (*See, e.g.,* Park, 1:66-2:4.) The WAP gateway may respond to the request if hosting the request web page or may convert the request into an HTTP request for a server on the Internet. (*See, e.g.,* Park, 2:5-10.) The Internet web server responds and the WAP gateway converts the HTTP response into a WAP response for transmission to the WAP-enabled terminal. (*See, e.g.,* Park, 2:15-25.) Thus, where PagerWorld is implementing in a WAP

environment, a POSITA would understand that selecting a specific portal from the main PagerWorld screen constitutes selecting a "*hyperlink.*"

4. Claim 15—"Collaborative Workspace"

15. The method of claim 1 wherein the mobile information channel comprises a collaborative workspace.

266. The combination of Pelkey and Eck discloses—"*a collaborative workspace*." In Eck, users communicate and collaborate on topics of interest, *e.g.*, by allowing each group member to post or send messages and/or photos, and respond to the messages and/or photos posted or sent by other group members. For example, Eck discloses that "[a]s players interact with other players in PagerWorld (e.g., by sending messages and playing games), players will share the fun and excitement of discovering new items, skills and appearances as their persona characters gain experience." (Eck, 10:27-31.)

267. In addition, among the types of games that can be played in PagerWorld are "[t]eamwork-based adventures requiring input from multiple players with complementary skills." (Eck, 13:40-45.) For example, a user can solicit an intervention from another user by sending a message "requesting help from a friend playing the same game. A player could, for example, request a ladder to climb a wall to gain a prize or level or request more ammunition to fight enemies." (Eck, 14:11-26.)

5. Claim 17—Chat Channel

17. The method of claim 1 wherein the mobile information channel comprises a chat channel facilitating interaction between the first user and the plurality of additional users.

268. The combination of Pelkey and Eck discloses "*a chat channel facilitating interaction between the first user and the plurality of additional users*." Eck discloses that multiple user games, such as PagerWorld, include the feature of "Chat and community interaction." (Eck, 10:15-19; *see also* Eck, 16:55-63, Figs. 11A-B (disclosing chat codes to "reduce[] the number of characters in a message, thereby reducing message charges").) Pelkey similarly discloses that the server "set[s] up text-based chat sessions between two or more logged-in players." (Pelkey, 17:6-10.)

269. Eck also discloses that "PagerWorld is the hub for communications, becoming a central meeting place to find friends and share messages." (Eck, 10:36-38.) One feature provided within PagerWorld is the ability to "view message boards." (Eck, 10:40-42.) A POSITA would have understood that message boards provide another avenue for members of the PagerWorld community to chat.

6. Claims 20—"Mobile Device Application"

20. The method of claim 1 wherein the mobile information channel is associated with a mobile device application.

270. The combination of Pelkey and Eck discloses, an "*application*" with a program component at the portable game machine and a program component on the server.

271. Pelkey discloses "[a] messaging service client [that] is implemented by program code contained in an application (e.g., a video game, a web browser) executed by the game system." (Pelkey, 1:42-44.)

272. Pelkey likewise describes different alternatives for storing the program code for the messaging application: "The application containing the program code for the messaging service client may be stored in a removable game cartridge. In other instances, some or all of the program code for the messaging service client may be stored in some other memory such as a memory associated with a communications circuit (e.g., modem) for establishing the network connection." (Pelkey, 1:44-51.)

273. By sending messages through a remote messaging service server, Pelkey discloses that "the messaging service of the present invention enables users of game systems to communicate with each other even if those users are engaged in different activities such as playing different games." (Pelkey, 2:20-23.)

> [F]or example, the messaging service provides for instant messages between one user browsing the Internet and another user playing a game. The messaging service also provides for instant messages between one user playing game A and another user playing game B. Of course, browsing and game-playing are merely illustrative and it

> will be recognized that the messaging service described herein may be used to provide instant messages between users of other applications such as productivity applications.

(Pelkey, 7:63-8:4.)

274. In addition, in Eck, "FIGS. 9A-9C show various screens in PagerWorld" an application running on the portable game machine. (Eck, 2:57.) As further explained in Eck:

> To play a game, a user of game machine 10 need only plug the appropriate game cartridge into slot 18 of game machine 10 thereby connecting the cartridge's ROM 42 (and other any circuitry it may contain) to game machine 10. This enables the game machine circuitry to access information contained with ROM 42 (and read/write memory 46), which information controls the game machine to play the appropriate video game by displaying images and reproducing sound as specified under control of the ROM game program information. Read/write memory 46 is used to store data such as game backup data.

(Eck, 4:9-20.)

275. Because the message application in Pelkey and PagerWorld in Eck are designed to be run on the portable game machine, the combination of Pelkey and Eck discloses, a "*mobile information channel [] associated with a mobile device application*."

7. Claim 24—Server

24. The apparatus of claim 23 wherein the processing element comprises at least one server accessible over the Internet via a network interface.

276. The combination of Pelkey and Eck discloses "*at least one server accessible over the Internet via a network interface*."

277. Pelkey discloses in Figure 1B (below) an exemplary embodiment showing a plurality of servers accessible over the internet (depicted as WAN 16).

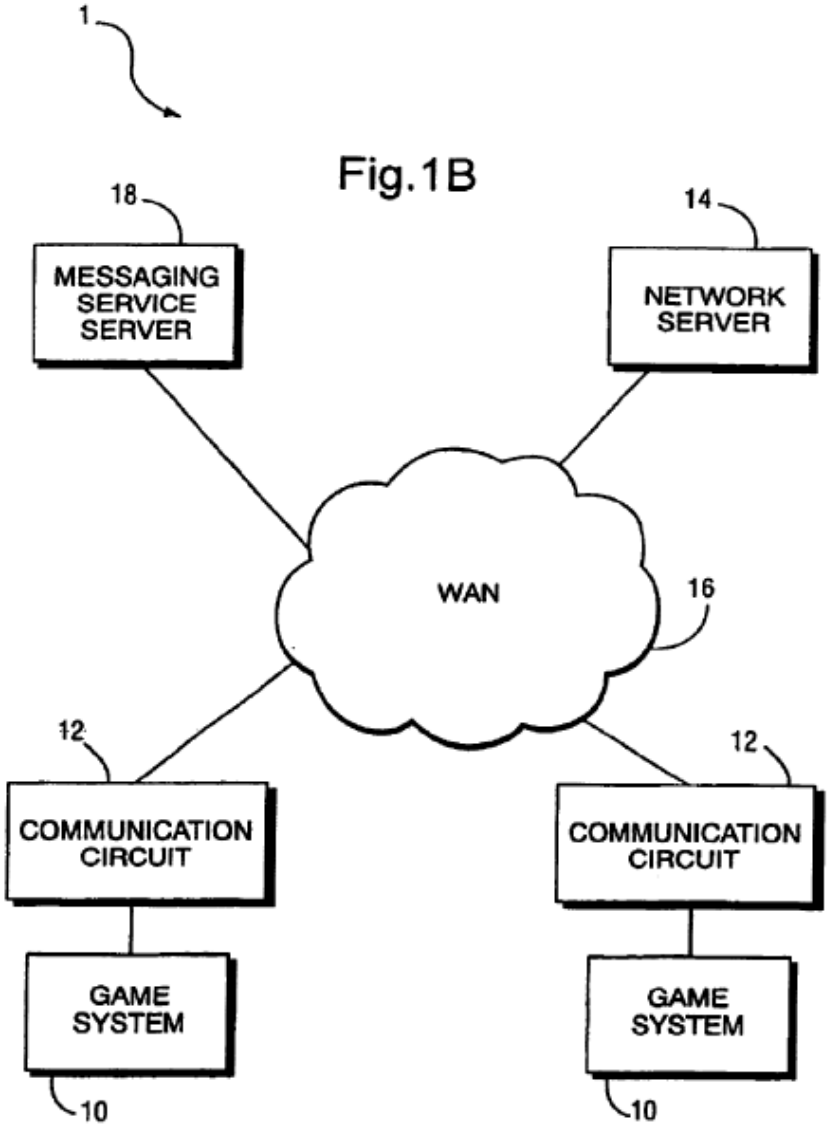

Pelkey, Figure 1B

278. Figure 1B of Pelkey illustrates a network "in which the messaging service described herein may be implemented." (Pelkey, 2:58-60.) The network "includes game systems 10 connected via communications circuits (e.g., modems, network interfaces, etc.) to a wide area network." (Pelkey, 2:60-62.)

279. Pelkey explains that the communication circuits 12 "may be provided internally to the game system or embodied as cartridges … removably attachable to a port or bay of the game systems." (Pelkey, 2:65-3:2.) Eck discloses the embodiment of a network interface in a cartridge. As shown in Eck's Figure 5A, the pager cartridge includes "an antenna 130 connected to a conventional radio section 132 for receiving and sending messages." (Eck, 6:34-36; *see also* Eck, 7:36-53 (describing a pager cartridge includes a codec/DSP section, bandpass filter, RF mixer and dual PLL section, crystal, transmitter, receiver and antenna).) The radio section and/or antenna is a "*network interface.*"

VI. Conclusion

280. In signing this declaration, I recognize that the declaration will be filed as evidence in a contested case before the Patent Trial and Appeal Board of the United States Patent and Trademark Office. I also recognize that I may be subject to cross-examination in the case and that cross-examination will take place within the United States. If cross-examination is required of me, I will appear for cross-examination within the United States during the time allotted for cross-examination.

Dated: February 3, 2025

Respectfully submitted,

Henry H. Houh.

Henry Houh, Ph.D.

APPENDIX

Exh.	Reference
1001	U.S. Patent 8,825,801 to Harper ("the '801 patent")
1002	File History of U.S. Patent 8,825,801
1005	WO 02/17652 to Randall, et al. ("Randall")
1006	U.S. Patent 7,047,030 to Forsyth ("Forsyth")
1007	U.S. Patent 7,056,217 to Pelkey, et al. ("Pelkey")
1008	U.S. Patent 6,716,103 to Eck, et al. ("Eck")
1009	Joint Claim Construction Statement from *Mobile Data Techs. LLC v. Meta Platforms, Inc.,* No. 7:22-cv-00244-ADA-DTG (E.D. Tex.)
1010	Patent Owner's Response to Petition (Paper 26) from *Mobile Data Techs. LLC v. Meta Platforms, Inc.,* IPR2024-00247
1011	Petitioner's Reply (Paper 33) from *Mobile Data Techs. LLC v. Meta Platforms, Inc.,* IPR2024-00247
1012	"Wireless Java for Symbian Devices" by Allin (September 2001) ("Allin")
1013	WAP Architecture (Version 12): "Wireless Application Protocol Architecture Specification, WAP-210-WAPArch-20010712" (July 12, 2001) ("WAP Architecture")
1014	Wireless Datagram Protocol (Version 14): "Open Mobile Alliance, WAP-259-WDP-20010614-a" (June 14, 2001) ("WDP")
1015	ETSI TS 123 040—Digital cellular telecommunications system (Phase 2+) (GSM); Universal Mobile Telecommunications System (UMTS); Technical realization of the Short Message Service (SMS) (3GPP TS 23.040 version 3.6.0) (September 2001) ("GSM SMS Standard")
1016	"Symbian OS Communications Programming" by Michael J. Jipping (June 2002) ("Jipping")

Exh.	Reference
1017	"Symbian Home Page," (January 24, 2002), https://web.archive.org/web/20020124070457/http://www.symbian.com:80/
1018	"Symbian: OS Technology," (February 2, 2002), https://web.archive.org/web/20020202090443/http://www.symbian.com/technology/technology.html
1019	"Symbian: OS Technology – Symbian OS phones and PDAs," (February 2, 2002) https://web.archive.org/web/20020202133445/http://www.symbian.com/technology/symbos-phones.html
1020	U.S. Patent 6,947,396 to Salmi ("Salmi")
1021	RESERVED
1022	RESERVED
1023	U.S. Patent 6,788,949 to Bansal ("Bansal")
1024	U.S. Patent 7,802,207 to Agboatwalla, et al. ("Agboatwalla")
1025	U.S. Patent 7,574,486 to Cheng, et al. ("Cheng")
1026	"Operating System Concepts (Fourth Edition) by Silberschatz et al. (January 1994) ("Silberschatz")
1027	U.S. Patent 6,937,588 to Park ("Park")
1028	Excerpt from Webster's Dictionary of Computer Terms (page 98)
1030	Patent Owner's Response to Petition (Paper 26) from *Mobile Data Techs. V. Meta Platforms, Inc.*, IPR2024-00248
1031	Petitioner's Reply (Paper 33) from *Mobile Data Techs. V. Meta Platforms, Inc.*, IPR2024-00248