UNITED STATES PATENT AND TRADEMARK OFFICE

BEFORE THE PATENT TRIAL AND APPEAL BOARD

Anthony Inc.
Petitioner
v.

ControlTec, LLC
Patent Owner

Patent No. 7,207,181
Issue Date: April 24, 2007
Title: REFRIGERATION UNIT CONDENSATION PREVENTION

Inter Partes Review No. IPR2025-00559

DECLARATION OF MICHAEL POLLOCK

TABLE OF CONTENTS

I. Introduction and assignment. 6
II. Qualifications 6
III. Materials considered. 9
IV. Legal framework applied. 9
V. Summary of opinion. 10
VI. Person of ordinary skill in the art (POSITA). 12
VII. Claim construction: limiting preamble. 13
VIII. Claim construction: "adapted for." 15
IX. Claim construction: Means-Plus-Function 22
X. Technical rebuttal. 29
A. Background and field of endeavor. 29
B. The Petition does not address aspects of Claim 1 and 8. 31
C. Carter does not disclose or render obvious the '181 Patent's activating/deactivating algorithms tied to preselected set points above dew point. 35
D. Beatenbough does not supply the missing dew point anchored hysteresis or the claimed processing structure. 44
E. King's sensor package and housing is not the claimed "housing means" that establishes thermal isolation via insulated air pockets as taught by the '181 Patent. 45
F. Carter and King do not provide a housing that provides thermal isolation. 46
G. Kotani's modular humidity meter does not provide the claimed housing means or the dual-unit thermal isolation in the refrigerated case context. 51
H. Gatling does not bridge the structural and algorithmic gaps. 52
I. "Mathematical equivalence" and "binary design choice" characterizations are incorrect and overlook control engineering realities. 52

J. Data storing means and wireless access means are not disclosed by generic references to processors and remote updates 53

K. Secondary Considerations 53

XI. Conclusion 54

Certificate of Service 56

PATENT OWNER'S EXHIBIT LIST

EX.2001	Anthony corporate history webpage, https://www.anthonyintl.com/Aboutus/History.aspx
EX.2002	U.S. Patent No. 4,261,179 to Dageford
EX.2003	U.S. Patent No. 5,778,147 to Kim
EX.2004	Declaration of John "Weeb" Bunch under 37 C.F.R. § 1.68
EX.2005	Photographs of ControlTec LLC's AS-20 Anti-Sweat Controller case
EX.2006	Maintenance fee report for U.S. 7,207,181
EX.2007	WIPO(PCT) Application No. WO2006093751A2 to Murry
EX.2008	International Search Report for Application No. WO2006093751A2
EX.2009	Written Opinion of the International Searching Authority for Application No. WO2006093751A2
EX.2010	Information Disclosure Statement filed in U.S. Patent Application No. 12/337,981 on March 17, 2009.
EX.2011	Patent Assignment, Reel 023084, Frame 0117 (assigning U.S. Patent Application No. 12/337,981 to Anthony International).
EX.2012	Patent Assignment, Reel 027144, Frame 0103 (confirming Anthony International as a DBA of Anthony, Inc. and that U.S. Patent Application No. 12/337,981 was assigned to Anthony Inc.)
EX.2013	Declaration of Charles M. Jones
EX.2014 (NEW)	**Declaration of Michael Pollock**
EX.2015 (NEW)	**Anthony Complete Infinity 60 Series Installation Manual - https://www.anthonyintl.com/docs/default-source/2022-documents/99-25726-i001-rev-a-_infinity-60-series-complete-installation-manual.pdf**
EX.2016 (NEW)	**https://www.anthonyintl.com/Solutions/door-selection-guide**
EX.2017 (NEW)	**https://www.anthonyintl.com/docs/default-source/2025-documents/why-anthony-tri-fold-flyer.pdf**

EX.2018 (NEW)	**https://www.anthonyintl.com/AboutUs/History.aspx**
EX.2019 (NEW)	**Transcript of Deposition of Dr. Gregor P. Henze (Dec. 11, 2025)**
EX.2020 (NEW)	**ASHRAE Psychrometric Chart #1, copyright 1992**
EX.2021 (NEW)	**U.S. Department of Energy Office of Scientific and Technical Information, Investigation of Energy-Efficient Supermarket Display Cases, Dec. 2004, available at https://doi.org/10.2172/885840.**
EX.2022 (NEW)	**U.S. Department of Energy, Guide for the Retrofitting of Open Refrigerated Display Cases with Doors, Nov. 2012, available at https://www1.eere.energy.gov/buildings/commercial/pdfs/cbea_open_case_retrofit_guide.pdf**
EX.2023 (NEW)	**https://www.anthonyintl.com/docs/default-source/service-support-documents/in-0051-energy-controller-installation-instruction-all-model-frames4085b55740c861768229ff0000ead2ac.pdf?sfvrsn=874dd48d_2**
EX.2024 (NEW)	**Curriculum vitae of Michael Pollock**

I, Michael A. Pollock, declare as follows:

I. Introduction and assignment.

1. I have been retained on behalf of ControlTec, LLC ("Patent Owner") to review and respond to the declaration submitted by Dr. Gregor P. Henze in the inter partes review of U.S. Patent No. 7,207,181 (the '181 Patent). My opinions are based on my education, training, and more than twenty-five years of practical engineering experience with HVAC&R systems, controls, system integration, and product design and deployment in commercial and industrial facilities, including supermarkets and food storage environments where condensation control is a recurring engineering concern.

2. I submit this declaration to explain why the challenged claims of the '181 Patent would not have been obvious to a person of ordinary skill in the art at the time of the invention, to identify critical technical errors in Dr. Henze's opinions, and to explain why his proposed combinations of references do not disclose or render obvious the specific structures and functions claimed in the '181 Patent.

II. Qualifications.

3. I hold a B.S. in Mechanical Engineering, cum laude, from Drexel University (1998), with focus on thermal and mechanical systems, thermodynamics, and HVAC&R (Heating, Ventilation, Air Conditioning &

Refrigeration). I am a licensed Professional Engineer (PA PE075410), a trained Energy Manager, and registered to practice before the United States Patent and Trademark Office. I hold an EPA Universal Certification under the Clean Air Act for refrigeration and HVAC equipment.

4. I have spent over twenty-five years in the product and manufacturing sector (including portions Research and Development, "R&D"), with the majority of this time spent as a Dupont Energy Engineer focused on thermal systems products and projects, inclusive of: refrigeration systems, chillers, HVAC, heat and mass transfer, fluid flow, instrumentation and controls, power and electrical applications, steam and utilities, equipment/building thermal envelope applications, insulation etc. The majority of my product related work experience has focused on commercial and industrial refrigeration applications and products, including many supermarket and cold food storage applications, with energy efficiency of systems and reliability being key elements. Specifically, beginning in the 2006 timeframe and ranging through approximately 2015, I led Dupont's corporate engineering support for refrigeration products in the U.S. including the development of a national tech staff to support new products as used in customer applications, retrofits and field trials. Most of this work was performed in commercial supermarkets where I routinely assessed system thermal loads, energy use, capacity, maintenance/reliability practices as well as analyses of system

controls, temperature maintenance, defrost/condensation management etc. These activities included refrigerated display case equipment, with retrofit related work also including the assembly/disassembly of numerous refrigerated display cases. In addition to such product work, my project engineering portfolio/experience ranges from small retrofits/projects to large multi-hundred-million-dollar greenfield and expansion programs, where I led, designed, managed construction of, commissioned, and troubleshot commercial and industrial equipment and facilities. During these project activities, I acted as the engineer and/or managed engineering for equipment encompassing thermal systems, chillers and refrigeration, heating systems, instrumentation and controls, distribution, and air-handling systems in environments where condensation management and prevention were operational and safety priorities.

5. I have extensive forensic consulting and expert witness experience investigating refrigeration, condensation, insulation, Indoor Air Quality ("IAQ"), HVAC, building envelope, and roofing issues in food grade facilities (including supermarkets and FDA environments), as well as product, system, and controls performance disputes. I have trained engineers and facilities personnel on applicable standards and best practices including, among others, "ASHRAE" (American Society of Heating Refrigeration and Air Conditioning Engineering), "AHRI" (American Heating and Refrigeration Institute), "FMI" (the Food Industry

Association), "ASME" (American Society of Mechanical Engineers), "ISA" (International Society of Automation), "NEC" (National Electrical Code), "NFPA" (National Fire Protection Association"), "ASTM" (American Society of Testing and Materials) etc.

6. Based on my background and experience, I meet or exceed the qualifications of a person of ordinary skill in the art for the '181 Patent. In addition, my practical, hands-on experience informs a grounded understanding of system-level constraints, control stability, sensor packaging, and the interplay between thermal mass, heat transfer, airflow, and condensation that is critical to evaluating the prior art combinations proffered by the Petitioner.

III. Materials considered.

7. I reviewed the '181 Patent and its file history, the Petition for Inter Partes Review, and the declaration of Dr. Gregor P. Henze. I also reviewed the prior art cited by Petitioner and Dr. Henze, including Carter, Beatenbough, King, Gatling, and Kotani, and the technical portions of the secondary sources identified by Petitioner to the extent relevant to the issues raised.

IV. Legal framework applied.

8. I understand that means-plus-function limitations are limited to the structures, materials, or acts described in the specification, and equivalents thereof. For microprocessor-implemented functions, the corresponding structure is the

algorithm disclosed in the specification, not a generic microprocessor alone. I further understand that obviousness requires not only a reason to combine but also that a person of ordinary skill would have had a reasonable expectation of success without undue experimentation, and that the law cautions against hindsight reconstruction.

V. Summary of opinion.

9. The challenged claims recite concrete, interlocking structural and algorithmic implementations for condensation control in refrigerated display cases. Petitioner's case improperly abstracts those specific structures into generalized "principles" and substitutes different control objectives, different control triggers, different sensor packaging, and different housings from disparate contexts.

10. The Petition and Dr. Henze's declaration fail for at least the following reasons:

- They misidentify the corresponding structures for the claims' means-plus-function limitations, repeatedly substituting high-level functional goals or different algorithmic strategies for the specific control logic disclosed in the '181 Patent.
- They treat non-equivalent control schemes as "mathematically equivalent," ignoring the real-world differences in stability, hysteresis,

cycling, and energy performance addressed by the ’181 Patent’s disclosed algorithms and set-point architecture.

- They conflate “ambient equals surface temperature” deactivation logic (Carter) with the ’181 Patent’s dew-point-referenced preselected set-point logic for activation and deactivation, which is designed to anticipate condensation with stable margins in challenging store environments.
- They use sensor “assemblies” and housing structures from different applications (e.g., King’s laminated glass package) as if they were interchangeable with the ’181 Patent’s purpose-built housings which establish insulated air pockets to thermally isolate distinct sensing units from each other and from the case frame.
- They overlook the functional interplay of the claimed housing geometry, orientation, sensor placement, and minimized thermal contacts specified in the ’181 Patent to deliver accurate dew point and frame temperature monitoring while mitigating measurement bias from the frame and local heat sources or heat sinks.
- They rely on combinations that would not have been pursued by a POSITA, and even if pursued, would have required redesign contrary to the teachings of the references or would have failed to deliver the ’181

Patent's specific structures and control results with a reasonable expectation of success.

VI. Person of ordinary skill in the art (POSITA).

11. I generally agree that a POSITA would have a bachelor's degree in mechanical or electrical engineering or a related field and several years' experience in HVAC&R. A POSITA would have to both understand refrigeration as well as the specific implementation and concerns of refrigerated display cases. Based on the work I did from 2006 to 2015 on refrigerated display cases, I learned many specific concerns with such cases that a POSITA would have beyond those of typical refrigeration applications. Specifically, thermal characteristics of refrigerated display cases lead to different concerns as compared to ordinary refrigerators, due to the frame and glass combination used. Additionally, customer interactions with refrigerated display cases lead to different concerns related to the size, shape and location of sensors to prevent interference of customers with such systems. The Petition tends to overstate what a POSITA would "simply" do across disparate systems. In my experience, a POSITA working on supermarket display cases appreciates that condensation control requires careful coordination of sensors, packaging, airflow, and control hysteresis, and that small differences in sensor placement, thermal isolation, and algorithm design materially affect performance, energy use, and reliability. Specifically, the '181 Patent recites that

the field of invention "relates to frame and/or door heating to remediate condensation build-up in refrigerated display cases, and, more particularly, relates to sensing and operating devices and methods for activation and deactivation of such heating. Additionally, many of the claims recite aspects that describe the system having been specifically adapted for refrigerated display cases, so a POSITA would have to know the specifics of these cases. For instance, claim 1 recites that sensing units are "adapted for monitoring temperature of one of the display case door or display case frame and including a carrier." Claim 8 recites that sensing units are "adapted for mounting at the display case for monitoring temperature of one of the display case door or display case frame." In order to know how to adapt the systems for refrigerated display cases, a POSITA would have to have had experience working with such cases for at least two years. Therefore, a POSITA would have a bachelor's degree in mechanical or electrical engineering or a related field and at least two years working with refrigerated display cases.

VII. Claim construction: limiting preamble.

12. I have reviewed the preamble of claims 1, 8, and 14. The preamble of these claims set the context for the claims and provides meaning for the rest of the limitations of the claims. I have been informed that if a preamble breathes life and

meaning into a claim that then that preamble would be considered limiting. That is the case here and a POSITA would read it as such.

13. Specifically, the recitation of "refrigerated display case having at least one door, a frame and at least one frame/door heater" provides meaning, structure, and a roadmap to the subsequent claim terms. In relation to claim 14, the preamble recites "a refrigerated display case having at least one door, a frame and at least one frame/door heater." Since, the first occurrence of "display case frame," (outside of the preamble) occurs with the article "the", this claim term must be referencing an earlier recited claim term. The only claim term that it may refer to is the frame provided in the preamble. A similar scenario is true for claim 1 and 8. The preamble of claim 1 recites "refrigerated display case having at least one door, a frame and at least one frame/door heater" and forms the antecedent for "the display case door or display case frame," since this claim aspect has "the" as an article, it must refer to the preamble, as there is no other possible antecedent. The preamble of claim 8 recites "an array of refrigerated display cases, the cases each having at least one door, a frame and at least one frame/door heater," and forms the antecedent for "the display case door or display case frame," since this claim aspect has "the" as an article, it must refer to the preamble, as there is no other possible antecedent. Therefore, because the preamble provides meaning to the claims and forms an antecedent, it should be considered limiting.

VIII. Claim construction: "adapted for."

14. Several claim terms include the term "adapted for." This includes independent claims 1 and 8. Claim 1 reads: "a frame temperature sensing unit ***adapted for*** monitoring temperature of one of the display case door or display case frame" and "a dew point sensing unit ***adapted for*** monitoring ambient air temperature and relative humidity outside of the display case". Claim 8 reads: "a frame temperature sensing unit ***adapted for*** mounting at the display case for monitoring temperature of one of the display case door or display case frame, a dew point sensing unit ***adapted for*** mounting at the display case for monitoring ambient air temperature."

15. I have been informed by counsel that it is necessary to address these claim aspects and that the phrase "adapted for" can have a narrower meaning than mere capability, specifically indicating that the claimed machine is "designed or constructed to be used" in a particular manner.

16. Based on claims 1 and 8 using the phrase "adapted for" in relation to monitoring the temperature of one of the display case door or display case frame," I think the frame temperature sensing unit must include certain characteristics specifically adapting it to refrigerated display cases.

17. I cannot identify where Petitioner has identified specific characteristics in the pointed to prior art of Carter or King, where what Petitioner claims is the temperature sensing unit has been adapted for refrigerated display cases.

18. I cannot identify where in the Petition that Petitioner has described specific adaptation to refrigerated display cases.

19. It is clear to me in the specification of the ’181 Patent that the claimed system is specifically adapted for refrigerated display cases. In this context, “frame” has special meaning. This is identified in the disclosure and Fig. 1, reproduced below.

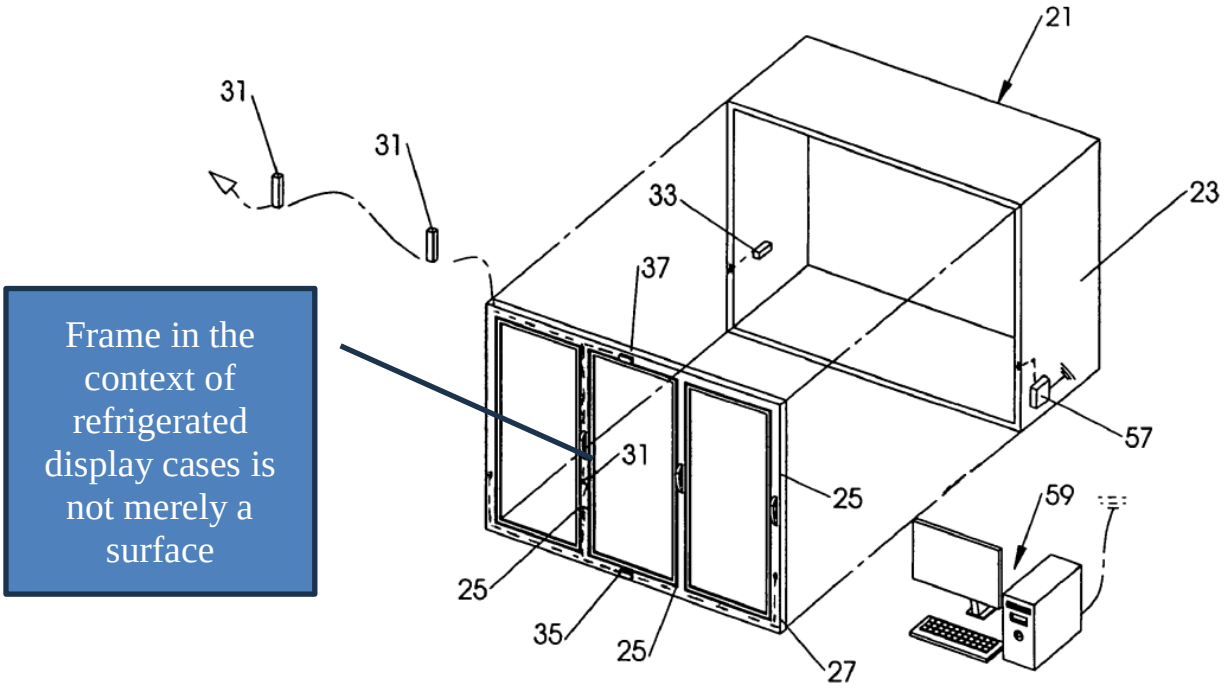

FIGURE 1

20. Petitioner knows this difference, since its own documentation identifies the "frame" as being different from the refrigerator. The image below from Petitioner's own products, shows a "frame" is a "border element" or "structural border", not a refrigerator surface thereof. *See* EX.2015, P.47.

Figure 9.1 Frame Assembly for Infinity 60 Series Normal Temperature for Replacement Parts
(See Table 9.1 for Part Numbers)

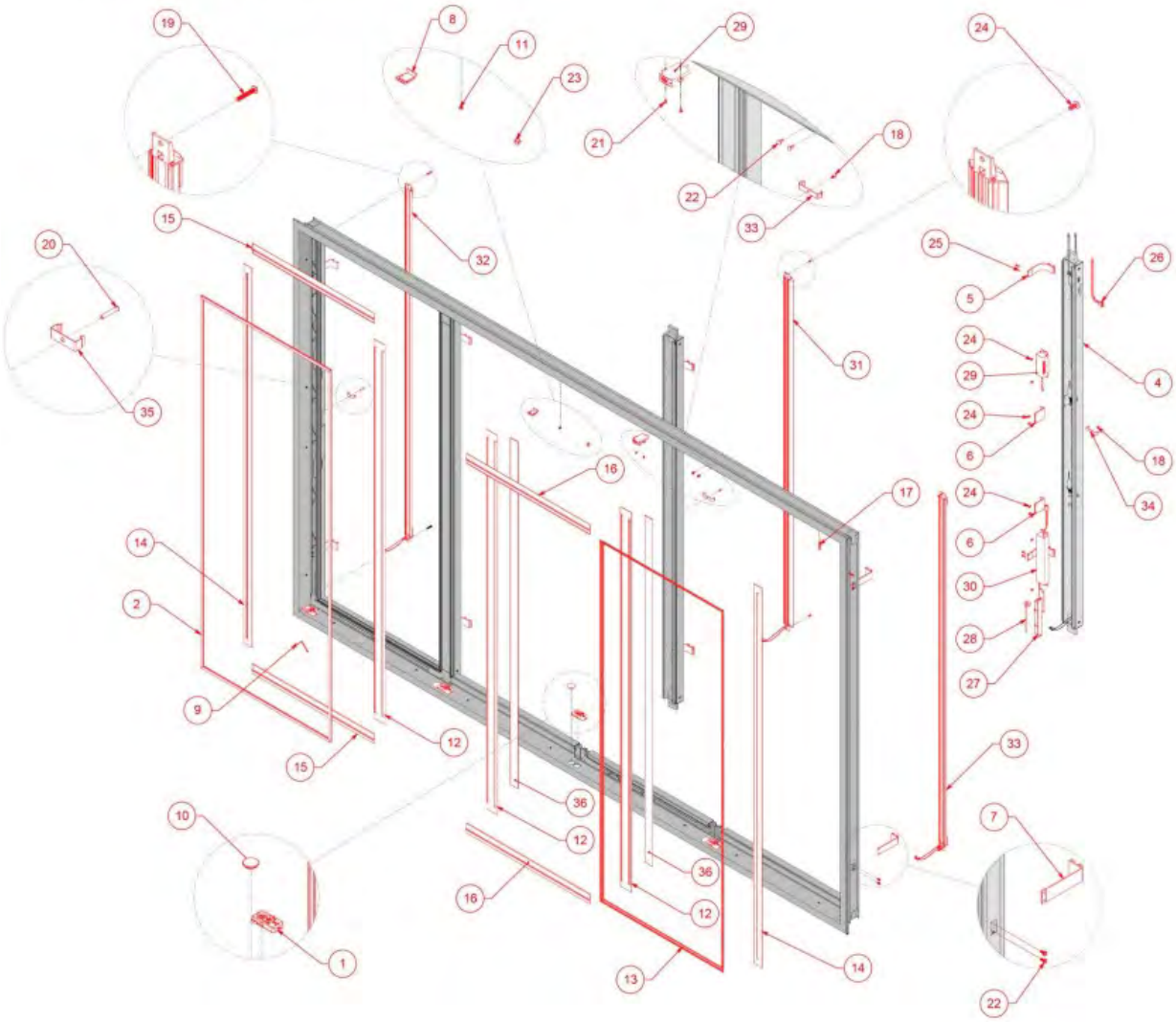

EX.2015, P.47.

21. Dr. Henze does not seem to appreciate this difference but a POSITA would. Petitioner would certainly appreciate this difference, however, since their business is based on providing refrigerated display cases. The image below shows their door selection guide, which is the primary product group of their business. *See* EX.2016.

CHOOSE THE RIGHT DOOR FOR YOUR STORE

	Normal Temp					Low Temp		
	401	101	INFINITY 90	INFINITY MAX	VISTA C	401	101	INFINITY 90
Temperature/Environment								
RH Protection (at 75°F Ambient)	55	65	65	65	65	55	65	65
Application								
Cooler	✓	✓	✓	✓	✓			
Freezer						✓	✓	✓
Heavy-Duty Beer Cave		OPTIONAL						
Glass Pack Configuration								
Glass Standard - 3-pane		✓	✓			✓	✓	✓
Glass Standard - 2-pane	✓			✓	✓			
Standard Package								
Energy Controller	✓	✓	✓	✓	✓	✓	✓	✓
Magnetic Door Gasket	✓					✓		
LifePlus Gasket "with 3 Year Warranty"		✓	✓	✓			✓	✓
Automatic Hold-Open & Door Stop	✓	✓	✓	✓	✓	✓	✓	✓
Hinge Pin	✓	✓	✓	✓	✓	✓	✓	✓
Hydraulic Door Close				✓				
Reversible	✓	✓	✓		✓	✓	✓	✓
Handle	TRIMLINE	SLIMLINE	VISTA ARCH	VISTA ARCH	FULL LENGTH	TRIMLINE	SLIMLINE	VISTA ARCH
Full Length Handle	OPTIONAL	OPTIONAL	OPTIONAL		STANDARD	OPTIONAL	OPTIONAL	OPTIONAL
Lighting Options								
Optimax 7 Lower Power	✓					✓		
Optimax 7 Standard Power	OPTIONAL	✓	✓		✓	OPTIONAL	✓	✓
Optimax 7 French Swing		OPTIONAL	OPTIONAL		OPTIONAL			
Optimax 7 Infinity MAX				✓				

EX. 2016.

22. Knowledge of the meaning of "frame" would be apparent to a POSITA, as would the meaning of "refrigerated display cases". A POSITA would appreciate that systems must be properly adapted to such cases. Petitioner has built a business on these specialized refrigerated display cases and the need to adapt systems specific for them. Petitioner's failure to address what these adaptations might be is a major oversight.

23. Fig. 3 of the '181 Patent reproduced below, appears to me to be specifically sized and shaped to fit with refrigerated display cases.

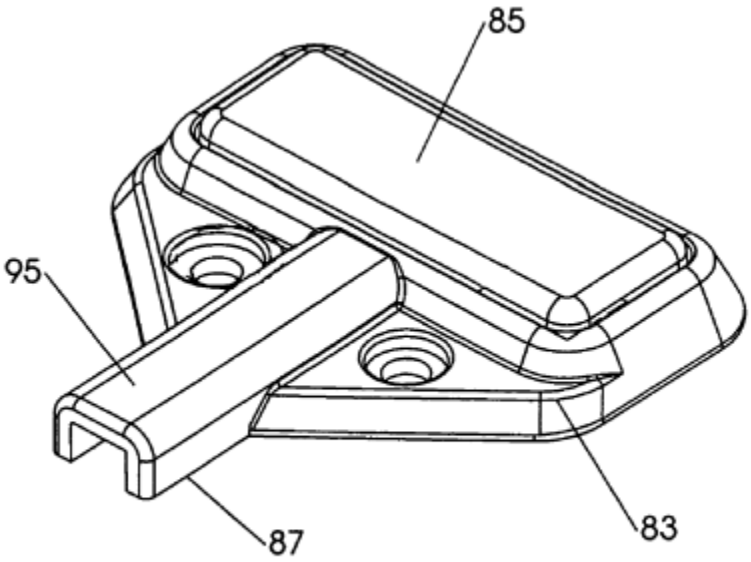

FIGURE 3

EX.1001, P.4

24. As shown in Fig. 6, the apparatus of Fig. 3 is specifically designed to fit in void spaces of refrigerated display cases. Part 83 is the housing for the temperature sensor. As a POSITA would know, there is space between the bottom

of the door 25 and the case frame unit 93 of refrigerated display cases and it appears that the disclosed system is designed and adapted for fitting there. The benefits of placement here include sensing temperature proximal to the door bottom, without being in contact with the door, which benefits the measurement stability of the ’181 Patent through the reduction of biasing conduction and/or contact based heat transfer from the door/frame to the sensor. This placement of this sensor as illustrated also allows for unobtrusive opening and closing of the display case door in relation to the sensor, and is also observed to be protected from people or vehicle traffic occurring outside the refrigerated case which could damage the sensor; i.e. cart traffic, hand truck or similar etc.

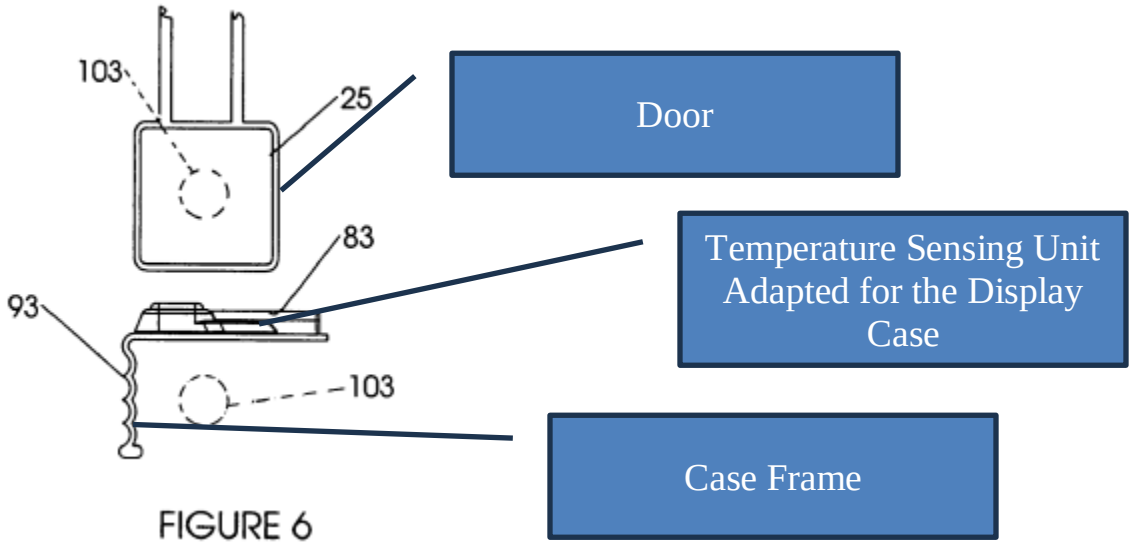

EX.1001, P.6 (annotated).

25. The same basic idea holds true for the Dew Point Sensing Unit. The Dew Point Sensing Unit has specifically been designed to fit between door 25 and

frame 93 in the showing of Fig. 12 below from EX.1001. In the showing of Fig. 9 from EX.1001 below, the dew point sensing unit is further shown at an elevated position above the refrigerated display case door 25, isolated from biasing cold air flows it would experience if positioned at the bottom of the display case, such as when the display case door is open(ed); i.e. cold air from inside the refrigerator/freezer falls due to having increased density and flows out of lower portions of the display case door (when the door is opened).

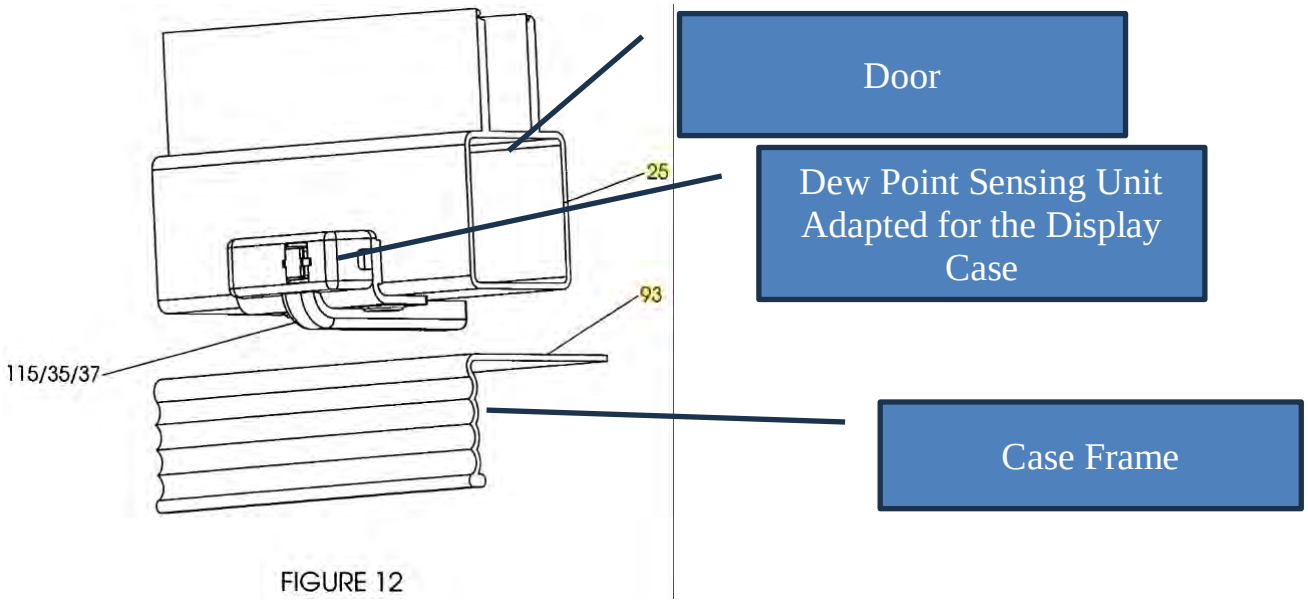

EX.1001, P.10 (annotated).

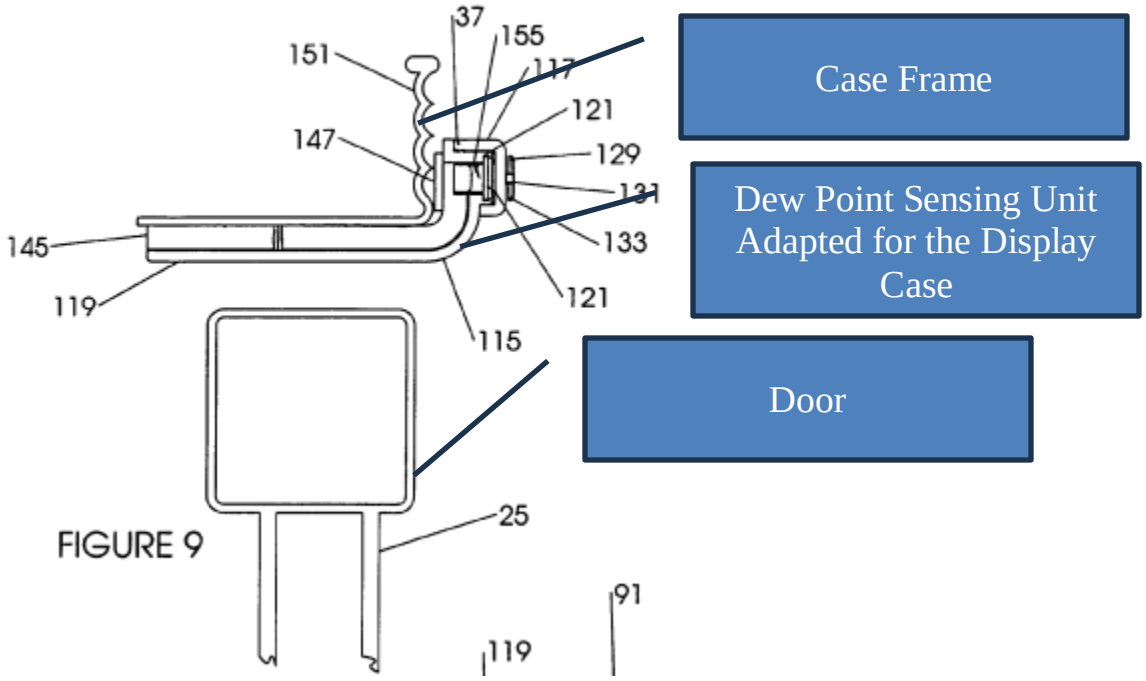

EX.1001, P.8 (annotated).

26. In the context of the claims, "adapted for" is a meaningful limitation, as the systems are specifically designed for refrigerated display cases. Not any type of sensor system with housings and features that are not specifically designed for refrigerated display cases would function in the context of the '181 Patent. In the context of the '181 Patent, "adapted for" means more than simply applied to, it means the sensor system and its housings of the '181 Patent are specially designed for refrigerated display cases, in their form and operation.

IX. Claim construction: Means-Plus-Function

27. Several limitations employ "means" language. For these, I identify the functions and the corresponding structures disclosed in the '181 specification.

28. Processing means/control means for activating and deactivating based on dew point with preselected set points: The corresponding structure includes a microprocessor executing the specific control flow disclosed by the ’181 Patent, in which when the monitored frame temperature drops below a preselected set point above the dew point value as derived from monitored ambient temperature and relative humidity, the heater is activated. When the monitored frame temperature rises above a second preselected set point above the dew point value, the heater is deactivated. EX.1001, l:40-48.

29. Housing means for locating sensing units and establishing thermal isolation: The corresponding structure includes the disclosed housings comprising a base and cover that minimize thermal contact, establish insulated air pockets, and position the temperature sensor and dew point sensing components amid those air pockets, thereby thermally isolating and decoupling the sensing units from each other and from the case frame/door. This is not a generic “enclosure,” but a structure detailed to achieve specific thermal behavior.

30. Means for thermally isolating dew point and temperature sensing units: The corresponding structure, again, is the specific housing architecture and internal geometry—including air pockets and minimized conductive pathways—configured to maintain accurate dew-point-derived triggering in proximity to a

cold frame (or warm frame during heating etc.), while shielding the frame temperature sensor from ambient variability.

31. Data storing means and wireless access means: The specification discloses a processor configured to store sensing and operational data and a wireless interface configured for data access and remote updates. A bare assertion that "any" processor stores "some" data or that "remote updates" were known does not disclose the corresponding structure or provide an enabling integration with the case-level control architecture set out in the '181 Patent. The specification discloses that "The entire system preferably includes wireless communication for receiving data from multiple control units 31 at different cases 21. Controller unit 31 and communications board/transmitter/receiver 59 transfer data to central processing 59 for data viewing, tracking and report preparation." EX.1001, l.10-14. These elements provide structure for the data storing means, the means for wirelessly accessing, and the communication control unit.

32. Specially, for the "processing means" and "control means," the corresponding structure is not a microprocessor alone but "for activating the display case frame/door heater when monitored display case door or frame temperature drops below a preselected set point above a dew point value derived from monitored ambient temperature and relative humidity. The processor also deactivates the frame/door heater when monitored display case door or frame

temperature rises above a second preselected set point above the dew point value." EX.1001, 2:41-48.

33. The patent's dual, dew point-referenced setpoint algorithm preselects (distinct) ON and OFF thresholds above dew point that create defined hysteresis control, anticipate condensation accurately, and avoid rapid/unnecessary cycling in the retail-store environment. The challenged claims recite concrete, interlocking structural and algorithmic implementations for condensation control in refrigerated display cases.

34. For the "housing means," the corresponding structure is set forth in the claim itself and is a structure "for locating said sensing units including structure establishing thermal isolation of said sensing units by minimizing heat transfer contacts between said sensing units." EX.1001, 9:47-50. The Petition alternatively proposes that the structure includes a base and a cover that when mated establish air pockets. Pet., 5. This cannot be the case however, since the '181 Patent's dependent claims themselves include these limitations and those claims must further limit the claims from which they depend. For instance, claim 2 in part recites "said housing means includes a frame temperature sensing unit housing, said frame temperature sensing unit housing including ***a base and a cover***, said cover having a depth ***creating a first one of said air pockets*** at one side of said temperature sensing unit...." EX.1001, 55-59 (emphasis added). The

second definition proposed by Petitioner would create a redundancy and cause aspects of dependent claims to not further limit the claims they depend from which they depend.

35. Instead, the intrinsic evidence of the patent specification assists in defining this means plus function claims. The thermal isolation is explained simply in the specification. The specification states:

> Housing 115 is configured to ***thermally isolate dew point sensor 37*** so that accuracy of the dew point sensor is maintained within to 1 to 3 degrees Centigrade. First, by ***assuring that sensor 37 is held away from the unnaturally heated frame*** (either cooled by the freezer or heated by frame heaters) with spacer ribs 147, the frame temperature will not influence the relevant dew point readings (primarily ambient air temperature). ***The air pocket (155 in FIG. 9) behind board/carrier 121*** and extending all the way to the mounting surface at unit 151 prevents thermal transfer through housing 115 from the mounting surface of frame unit 151.

EX.1001, 7:33-43 (emphasis added).

36. Therefore, the housing that provides thermal isolation to the dew point sensor includes two characteristics: 1) the housing assures the dew point sensor is held away from the frame; 2) there is an air pocket behind the board/carrier of the sensor. As is clear from the specification, these two aspects are specifically pointed to as providing thermal isolation and the claim should be construed

accordingly, namely that the dew point sensor is held away from the frame and there is an air pocket behind the board/carrier of the sensor.

37. The air pocket can be seen in Fig. 9. I have annotated it below and it corresponds to part number 155.

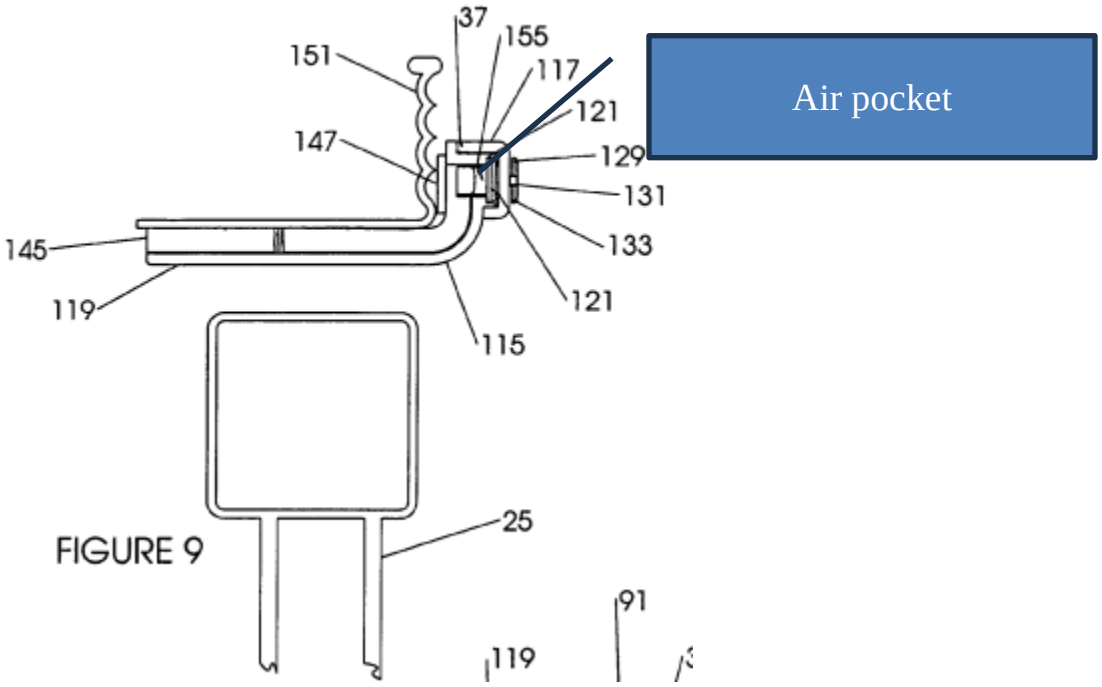

EX.1001, P.8 (annotated).

38. For "[a] means for thermally isolating said dew point sensing unit from variations in temperature of the display case frame or display case door," (EX1001, 12:4-7), the thermal isolation is explained simply in the specification. The specification says:

> Housing 115 is configured to ***thermally isolate dew point sensor 37*** so that accuracy of the dew point sensor is maintained within to 1 to 3 degrees Centigrade. First, by ***assuring that sensor 37 is held away from***

> ***the unnaturally heated frame*** (either cooled by the freezer or heated by frame heaters) with spacer ribs 147, the frame temperature will not influence the relevant dew point readings (primarily ambient air temperature). ***The air pocket (155 in FIG. 9) behind board/carrier 121*** and extending all the way to the mounting surface at unit 151 prevents thermal transfer through housing 115 from the mounting surface of frame unit 151.

EX.1001, 7:33-43 (emphasis added).

Therefore, the means for thermally isolating provides thermal isolation to the dew point sensor includes two characteristics: 1) the housing assures the dew point sensor is held away from the frame; 2) there is an air pocket behind the board/carrier of the sensor. The section cited by the Petitioner merely provides a structure of the housing without referencing the structural components that actually provide for thermal isolation, referencing EX.1001, 7:1-62, Figures 7-9. The reference to the text of the specification that discussed thermal isolation is EX.1001, 7:33-43 as shown above. As is clear from the specification, these two aspects are specifically pointed to as providing thermal isolation and the claim should be construed accordingly, namely that the dew point sensor is held away from the frame and there is an air pocket behind the board/carrier of the sensor.

39. For "data storing means," "means for wirelessly accessing," and the "communication control unit," the corresponding structure is the integrated

board/transmitter/receiver coordinated by the control unit to store sensing/operation data at the case controller and to provide wireless access and remote updating of control parameters, including the reset/programming interface at the case.

X. Technical rebuttal.

A. Background and field of endeavor.

40. Plainly, the field of endeavor of the ’181 Patent is “remediat[ing] condensation build up ***in refrigerated display cases***.” EX.1001, 1:6-8 (emphasis added).

41. The entirety of the disclosure makes numerous references to the specific circumstances and configurations of refrigerated display cases. The ’181 Patent’s field is specific: remediating condensation buildup in refrigerated display cases, and the claims repeatedly recite the “refrigerated display case,” the “display case frame,” and the “frame/door heater.” For example, the specification begins: “[t]his invention relates to frame and/or door heating to remediate condensation build-up in refrigerated display cases,” and the Summary states that the system “activat[es] frame/door heaters before the dew point temperature at frame and door surfaces is reached” and “cycles off at a set point above dew point.” The Field of the Invention section clarifies that the invention is designed to “remediate condensation build-up in refrigerated display cases.” *See* EX.1001, 1:6–8.

42. Petitioner attempts to justify combining or modifying Carter by first misstating the field of the ’181 Patent as relating to the field of “remediat[ing] condensation build up[sic].” Pet., 37. Carter is not in the same precise field. Carter never uses the term “display” or references the glass front doors of refrigerated display cases. Refrigerated display cases have specific characteristics that typical refrigeration systems do not. Specifically, they are as focused on displaying products as maintaining cooling temperatures. These two aspects are at time at odds, which provide for unique characteristics of these cases. This is why the ’181 Patent is specifically adapted for these cases and why this is meaningful. One markedly differing aspect between a refrigerated display case and a standard refrigerator, is that a standard refrigerator has an encasement/solid type door built with maximum insulation qualities in mind, while a refrigerated display case has a door with a transparent/glass type viewing opening having substantially different thermal and heat transfer/heat loss characteristics, etc. These differing properties are the main cause of condensation on the display case doors, as well as lack of condensation development on standard refrigerator door panels. Further, even if condensation does form on a standard refrigerator door, it does not obscure the view into such a refrigerator as there is no viewing opening.

Rebranding Carter’s “refrigeration or freezer equipment” as a “display case” by parenthetical gloss does not supply the missing structural context, particularly

when numerous ’181 Patent claim elements derive antecedent basis from the preamble. The claims repeatedly use “the display case frame” and “the display case frame/door heater,” deriving antecedent basis from the preamble’s “refrigerated display case.”

44. The Petition indicates that Carter, King, and the slue of other references could be applied to refrigerated display cases, asserting that ‘“a POSITA would have been motivated to apply Carter’s apparatus to the well-known use case of refrigerated display cases that store retail food items in an environment where ‘undesirable condensation can occur.’” Pet., 13. However, the Petition does not explain how this would occur. The ’181 Patent provides for this by specifically crafting housings and air pockets for refrigerated display cases.

B. The Petition does not address aspects of Claim 1 and 8.

45. As discussed above, I have been told that the phrase “a frame temperature sensing unit ***adapted for*** monitoring temperature of one of the display case door or display case frame and its kind” (“adapted for” in relation to the dew point sensing unit in claims 1 and 8), must be considered and to have more meaning than the words “capable of.” This makes sense, since the systems of Carter, King, and other references would not be adapted for refrigerated display cases. Petitioner doesn’t seem to explain how this would really occur.

46. The Petition states that a "POSITA would have been motivated to apply Carter's apparatus to the well-known use case of refrigerated display cases that store retail food items in an environment where 'undesirable condensation can occur.'" Pet., 13. Even if this were true, this does not directly address what a POSITA would have done to apply it to display cases and doors. This is not shown in the prior art of record, including Carter and King.

47. In relation to claim 1 (King is not applied to claim 8 in the Petition), in addition to Carter's lack of teaching in relation to "a frame temperature sensing unit ***adapted for*** monitoring temperature of one of the display case door or display case frame", the teaching of King are discussed on page 45-46 of the Petition. But similarly, Petitioner doesn't address this aspect of the claims in a meaningful way. Peitioner, first says that King's sensor system could be placed on the glass of Beatenbough. However, this doesn't explain how the sensor system would be adapted for monitoring temperature of one of the display case door or display case frame. In fact, King is not adapted for monitoring a display case door or frame. As the Field of Invention of King indicates, "[t]his invention relates to an automotive windshield fog sensor. More particularly, this invention relates to an integrated glass fog sensor unit terminated on a flex circuit." The Petitioner also fails to solve fundamentally inherent problems of such placement of King's sensor on the door surface of a refrigerated display case which opens and closes, such as in light of

the ’181 Patent’s sensor, which also provisions a carrier leading to reliability of signal for control and/or the ’181 Patent’s sensor that is protectively located in a void of the display case door and frame area.

48. Additionally, the Petition goes on to say that it would have been an obvious alternative solution to locate a “sensor unit” like the one King teaches against the display case frame to monitor the frame temperature. But no discussion of how the sensor unit might be adapted for “monitoring temperature of one of the display case door or display case frame.” No modifications beyond the movement of the sensor are discussed.

49. I would have to make additional modifications to the systems of Carter and King to adapt them for refrigerated display cases. The size, shape, orientation, and materials of the housings would have to be adjusted as well as to how and where ambient air (for dew point) and representative areas of the door/frame are provided to the sensors locationally.

50. The ’181 Patent goes into significant detail enumerating some of the consideration I would make. One example states the following:

> Temperature sensing chip 91 is located on board/carrier 89 so that when received in housing 83 it is located through sensor opening 99 at base 87. With proper materials sizing, chip 91 will be in direct contact with the surface of unit 93 being monitored when base 87 is mounted on frame unit 93. Housing 83 should be located at the coldest spot on the

exterior of the freezer. That spot is usually in the center of the case between the bottom of a door 25 and door or case frame unit 93 (see FIG. 6). Door and frame heaters 103 are located inside doors and/or frames of cases 21.

Housing 83 is configured at cover 85 and base 87 to thermally isolate sensing chip 91 from the warming effects of ambient air temperature in the vicinity of the chip and transfer thereof by the housing to the chip. Air space pockets 105 and 107 above and around chip 91, respectively, and limited housing contact (see FIG. 5 wherein only a single locating post 109 maintains board/carrier 89 at it position in housing 83) isolate chip 91 from the housing. By thus configuring board/carrier 89 (made typically of FIBERGLASS material) and housing 83 (preferably made of plastic such as acrylonitrile butadiene styrene polycarbonate) little transfer of heat to sensor chip 91 occurs, assuring accurate measurement of surface temperature of unit 93 unaffected by inaccuracies introduced as artifact into the measurement by ambient air temperature conditions in the vicinity of housing 83 (accuracy of frame temperature measurements has been documented by testing to be within 1 or 2 degrees Centigrade).

Air space pocket 105 is created by the depth of cover 85 adjacent board/carrier 89, the cover also insulating the sensor chip from the ambient. Air space pocket 107 is created by opening 99 having an opening area greater than surface area of chip 91. These improvements allow accurate tracking and monitoring of case frame temperature, used not only for precisely timed heater activation, but also for better timing

> of heater deactivation given the fast rise in frame temperature after frame/door heaters 103 are activated to prevent condensation.

EX.1001, 6:40 – 7:10.

51. Considerations like these would have to be considered to adapt the teachings of Carter and King to refrigerated display cases. I can't find anywhere in the Petition where these types of considerations are made, except for the above.

C. Carter does not disclose or render obvious the '181 Patent's activating/deactivating algorithms tied to preselected set points above dew point.

52. Carter's core control triggers are distinct in objective and method. Carter actuates supplemental heat when cabinet surface temperature falls below "dew point + 2°C," but deactivates based on an "ambient equals surface" condition. This deactivation criterion is not dew-point-based hysteresis control; it changes the reference variable and, in practice, leads to a humidity-dependent offset on one side and a non-dew-point termination on the other. That is a materially different control logic than the '181 Patent's use of preselected set points above dew point on both activation and deactivation legs to ensure stable margins expressly keyed to dew point.

53. Dr. Henze's assertion that adding a constant to one side of an inequality is "mathematically equivalent" to subtracting a constant on the other side of an inequal process control string omits critical system-level effects. In real

refrigerated case environments, noisy sensors, airflow transients from customer traffic, defrost cycles, and thermal mass lag necessitate deliberate hysteresis control margins and averaging strategies to prevent on-off chatter and premature shutoff. The ’181 Patent’s disclosed approach uses distinct, preselected set points—not Carter’s mixed criteria—to anticipate condensation reliably and maintain energy efficient operation of frame heating. Dr. Henze’s treatment of these control aspects as interchangeable ignores the real-world implications for process control stability, component wear (relay and/or heater cycling), and condensation risk.

54. Carter’s “ambient equals surface” deactivation is not an insubstantial substitution for the ’181 Patent’s “dew point plus preselected set point” deactivation. These are not equivalents. As noted above, these are distinctly different control points based on different thermal and psychrometric properties. Ambient temperature is the air temperature of the room area. The surface temperature of the frame differs from the ambient (room) temperature. Carter’s heating of the sealing surface of the refrigerator until the sealing surface of the refrigerator becomes as warm as the ambient room conditions is a distinct control operation under Carter and is orthogonal to the ’181 Patent as the ’181 Patent controls to a preselected value referenced to the dew point temperature.

55. In addition, circumstances when thermal equilibrium can occur between the ambient room temperature and the refrigerated space are also orthogonal to the ’181 Patent; as such conditions would not lead to the formation of condensation on the display case. Such equilibrium only occurs when the display case is out of service/not in use as a refrigerator; or when the ambient room temperature is the same as the refrigerated space temperature without heat transfer occurring across the display case and surface components. Under such conditions, anti-condensation systems are not necessary as there is no colder surface for moisture in the air to condense thereto.

56. The differences between Carter and the ’181 Patent’s controls are illustrated in the “Ambient Temperature vs. Dewpoint Temperature” chart below, with Carter heating the sealing surface of the refrigerator to the substantially higher ambient room temperature (top blue data set of the chart) in comparison to the ’181 Patent’s hysteresis based control to much lower dew point-based temperatures. The band of dew point temperatures illustrates how the dew point varies with the relative humidity (“RH”) of the air; such as 40% - 70% as shown. The ON/OFF Temperatures graph below shows how Carter deactivates late in lower humidity conditions and early/premature at high humidity conditions, when compared with the ’181 Patent shows how Carter deactivates late in lower humidity conditions and early/prematurely at high humidity conditions, when compared with to the

’181 Patent (this illustration uses an ambient temperature of 70°F, heater activations of dewpoint plus 2° F, and with Carter deactivating at the ambient temperature of 70° while the ‘181 deactivation at dewpoint plus 4.5°F). For Carter, this results in a waste of energy at lower humidity conditions, and insufficient warming to ensure no condensation at higher humidity conditions. In certain high humidity conditions, Carter’s Off setpoint could be satisfied simultaneously and/or before Carter’s On set point.

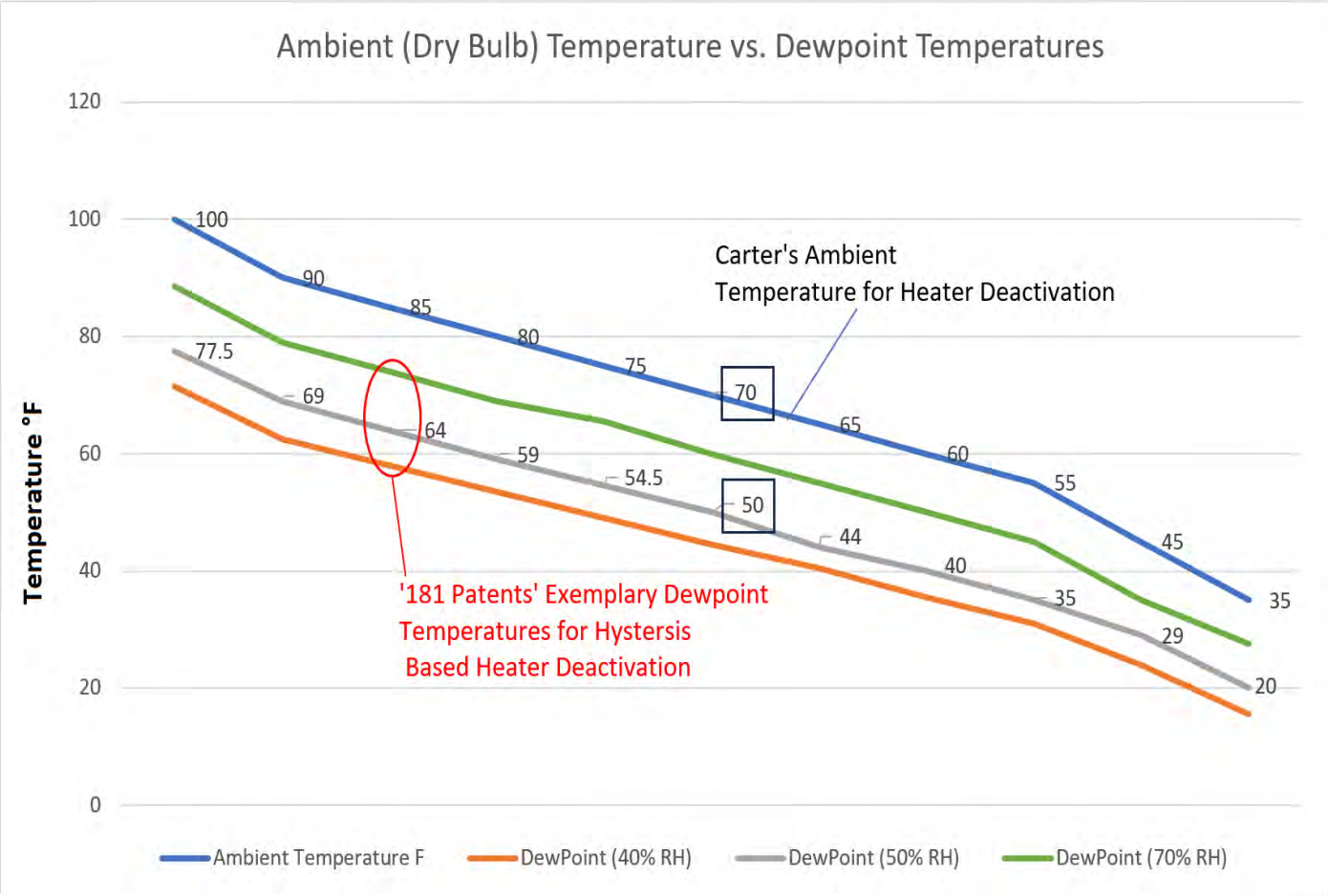

See EX.2020 (for dew point data at various humanities and temperatures).

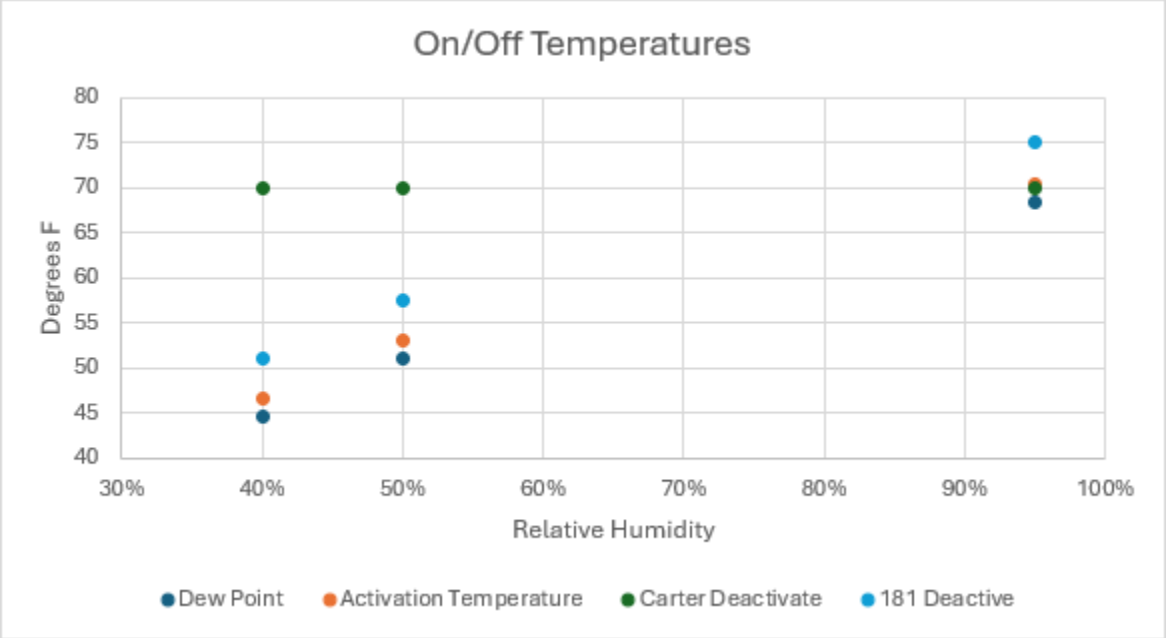

See EX.2020 (for dew point data at various humanities and temperatures).

57. In an exemplary showing using the chart above, for ambient air conditions of 70°F and 50% relative humidity, air has a dew point temperature of approximately 50°F at standard barometric pressure. In this instance, Carter would activate his sealing surface heater at a temperature of approximately 53.5° F (dew point + 2°C) until the sealing surface of the refrigerator reaches 70°F, for a sealing surface temperature gain of over 16° F. For comparison under the same conditions of this exemplary showing, the ’181 Patent preselects hysteresis control to target and maintain the door 5°F above the dew point of 50° F, or at 55° F. Under this scenario, the frame heater activates at 52°F (as preselected through dew point plus 2°F) with deactivation of the frame at 56.5°F (as preselected through dew point plus 6.5°F). This leads to a total temperature gain of 4.5°F for the frame in this

instance. In comparison, Carter's heating of the sealing surface of the refrigerator all the way to ambient temperature leads to significant and unnecessary warmer conditions along with higher heat transfer rates to the surrounding environments. This increased heater transfer increases the thermal load to the refrigerator space while also consuming the added energy for heating of the sealing surface of the refrigerator to be the same as ambient temperature.

58. Nor does Carter disclose the '181 Patent's data handling choices—averaging of sensor inputs and use of stored dew point tables tied to the local controller—in the manner claimed. Those choices serve specific functional roles in suppressing temperature measurement noise and delivering rapid, stable decisions in a packaged case controller which turns the frame heater off and on and relates to reliability and energy efficiency of the system. Dismissing them as "simple design choices" obscures their contribution to the functioning of the claimed algorithmic structure.

59. The claim indicates "to anticipate formation of condensation at the display case and activating and deactivating the frame/door heater responsive thereto." Carter does not teach "to anticipate formation of condensation at the display case…deactivating the frame/door heater responsive thereto." Carter does not teach that the deactivating is related to the anticipation of the formation of condensation.

60. Carter indicates that the heating is deactivated when the cabinet surface temperature is equal to the ambient temperature. *See* EX.1004, 5:55-63, Figure 3. But this is clearly not related to the anticipation of condensation. Condensation depends not just on the ambient temperature, but on the humidity as well (and other factors). Further, in very high humidity scenarios, such as (approaching) 100% humidity, when the dew point approaches ambient temperature, the surface temperature as heated by Carter to ambient temperature could allow condensation to occur. This is especially true in light of ’181 Patent’s disclosure that the “accuracy of frame temperature measurements has been documented by testing to be with 1 or 2 degrees Centigrade.” EX.1001, 6:65-67. A 2° C (equivalent to 3.6° F) an accuracy difference which could cause condensation in these high humidity circumstances, where the frame might actually be 2 degrees C (or 3.6°F) colder than the ambient temperature in Carter’s control application. It is further observed that if both Carter’s sealing surface temperature sensor and Carter’s ambient temperature sensor are both inaccurate such as by 2 degrees C (3.6°F), the actual frame temperature could be several degrees lower (such as on the order of 6+ °F) than the actual dew point of the air, further leading to condensation. Such scenarios where a refrigerated display case may be exposed to such conditions of 100% humidity may be in an outdoor setting near where rain is occurring, such as in a stadium having refrigerated coolers for drinks. In contrast, the ’181 Patent

controls accommodate for such conditions by utilizing an appropriate preselected activation/deactivation triggers based on being above the dew point temperature.

61. Therefore, Carter's deactivation is not related to the anticipation of condensation.

62. Carter explains that such supplemental heat "is only activated under conditions that would promote surface condensation." EX.1004, 2:4–32, 3:42–53. When condensation is no longer anticipated— e.g., "[i]f the cabinet surface temperature is equal to the ambient temperature"—"the control unit will deactivate the supplemental heat." EX.1004, 5:55–63, Figure 3; Pet. 29. This is not scientifically correct in that there is no risk of condensation on Carter's sealing surface when this area is heated far above the dew point of the air (i.e. all the way to ambient temperature). Further, the risk of condensation on the refrigerators Carter is designed for typically provide a higher degree of door/cavity insulation, since they aren't focused on displaying products and having glass/translucent type doors. Carter monitors the external/side temperature of freezer/refrigeration equipment, not a refrigerated display case and the "frame" thereof. Also, the environment Carter functions in is likely more controlled where specimens are stored. Carter says: "Effective sealing of the compartment chamber 26 may be important for housing ***specimens*** requiring subjection to certain operating temperatures for one of a variety of reasons." EX.1004, 4:3-6 (emphasis added).

This is not where the invention of the ’181 Patent is intended to operate and where it is adapted thereto.

63. The Petition and declaration of Dr. Henze also performs some inaccurate mathematical modifications. The Petition indicates: “As Petitioner’s Dr. Henze explains, a POSITA would have recognized that Carter’s heater deactivation technique accounts for dew point by employing a floating offset responsive to ambient conditions. EX.1003, P.122–123. That is, the POSITA would have known that ambient temperature is virtually always greater than dew point and the difference between them depends on—floats according to—the humidity of the ambient environment.” Pet., 30.

64. What is described by Carter is not a “floating offset.” I would describe Carter’s deactivation merely as a deactivation based on a distinct condition; i.e. when the sealing surface temperature is raised to the ambient temperature by Carter’s heater, the heater is deactivated. This is further observed in light of the substantial differences between ambient (dry bulb) temperature and dew point as described herein, including that the ambient temperature is solely based on the dry bulb temperature of the air, whereas dew point is a multivariate condition including ever changing relative humidity as well as barometric (atmospheric pressure etc.) conditions.

65. This amounts to a substantial difference in operation of Carter, including condensation and energy conservation effects, when applied to refrigerated display cases. This is because the sensors have imperfections and are located being at particular positions and orientations, with areas away from where the sensors are located at lower or higher temperature due to natural temperature variations across a refrigerated (display) case. This is due at least in part to the different materials that different parts of the case are made of, such as the glass windows, the metal or plastic door frame portions, insulation, etc. This is a non-obvious difference.

D. Beatenbough does not supply the missing dew point anchored hysteresis or the claimed processing structure.

66. Beatenbough focuses on variable pulse width control rather than preselected/discrete triggering criteria for activation/deactivation in proximity to condensation conditions. It neither discloses nor suggests the ’181 Patent’s algorithmic approach of using preselected dew-point-referenced set points on both activation and deactivation. Recasting Beatenbough as endorsing Carter’s mixed triggers depends on hindsight—selecting Carter’s distinct (control) logic to fill a gap and then calling the result “obvious.”

67. Integrating Carter’s deactivation-by-ambient temperature logic into Beatenbough’s system would not predictably yield the ’181 Patent’s performance. It would instead produce different control behavior, increased sensitivity to ambient air stratification, and differing system cycling risk (such as in high-traffic)

conditions—all contrary to the ’181 Patent’s deliberately chosen control margins referenced to dew point.

E. King’s sensor package and housing is not the claimed “housing means” that establishes thermal isolation via insulated air pockets as taught by the ’181 Patent.

68. King’s package was designed for a laminated glass application with a “thermal barrier tray” and protective dome that keep ambient sensors away from the cold glass. That is directionally consistent with general isolation goals, but it is not the structure claimed and disclosed in the ’181 Patent.

69. The ’181 Patent teaches housing means that include specific base-and-cover geometries and establishing insulated air pockets around both the frame temperature sensor and the dew point sensing components, while minimizing heat transfer contacts between these sensing units and the housing, and expressly locating these units amid insulated air pockets formed by the housing structure. The invention of the ’181 Patent co-locates, thermally decouples, and stabilizes sensing accuracy in a compact, case-mounted housing. For the frame temperature sensor, this provides accurate frame temperature with thermal protection from the ambient (room) conditions. For the dew point temperature sensor, this provides accurate dew point temperature measurement with thermal protection from the frame. These co-optimizations are not shown by King.

70. King does not disclose locating both units amid insulated air pockets as required. Nor does it disclose the claimed arrangement for "minimizing heat transfer contacts" in the manner and for the purpose described in the '181 Patent. The Petition treats any protective enclosure as "equivalent" to the claimed housing means. It is not. The '181 Patent's housing geometry, internal air pockets, are integral to the claimed function. Substituting King's dome-tray package for laminated glass would require reconfiguration to meet the '181 Patent's dual-unit, dual-isolation objectives at a refrigerated display case frame, and would not be a routine, predictable change.

F. Carter and King do not provide a housing that provides thermal isolation.

71. The claims require a ***housing means*** that both "minimiz[es] heat transfer contacts" and "locat[es] [the] temperature sensor and [the] dew point sensing component amid insulated air pockets formed by [the] housing." The specification underscores deliberate engineering—mated base/cover geometries that create defined pockets, controlled venting paths across the dew-point component, and retaining features that limit conductive pathways—so the sensors are thermally isolated from bias. The function is to co-locate, thermally decouple, and stabilize sensing accuracy in a compact, case-mounted housing that simultaneously measures frame temperature accurately while not being thermally polluted by ambient temperature and relative humidity readings.

72. Claim 1 recites:

> [H]ousing means for locating said sensing units including structure establishing thermal isolation of said sensing units by minimizing heat transfer contacts between said sensing units and said housing means and locating said temperature sensor and said at least one dew point sensing component amid insulated air pockets formed by said structure of said housing means.

EX.1001, 9:47-53.

Claim 15 recites:

> [M]eans for thermally isolating said dew point sensing unit from variations in temperature of the display case frame or display case door.

EX.1001, 12:4-7.

73. Based on my understanding of the structure and construction of the inventive concept of the ’181 Patent, as well as my knowledge of a POSITA, the housing and the means for thermal isolation properly construed includes two characteristics, namely that the dew point sensor is held away from the frame and that there is an air pocket behind the board/carrier of the sensor. These aspects are not obvious based on Carter and King.

74. Carter does not provide for Carter’s claimed dew point sensor to be held away from the frame and there is no air pocket. Carter provides for the sensor to be directly on the door latch cover assembly 20 of Carter. The Petition on page 24

attempts to indicate that these parts do not contact the door latch cover assembly. Only the figure as shown below, as used in the Petition provides the opposite. I have annotated the figure from their brief. Both parts 42, 44, and 46 contact the frame or an extension thereof. All of them contact the surface and are mounted thereon with these surfaces accordingly conducting heat. The latch system of Carter is made of heat conductive materials, very likely metal, so orienting sensors on the latch system would not thermally isolate them from the refrigerator.

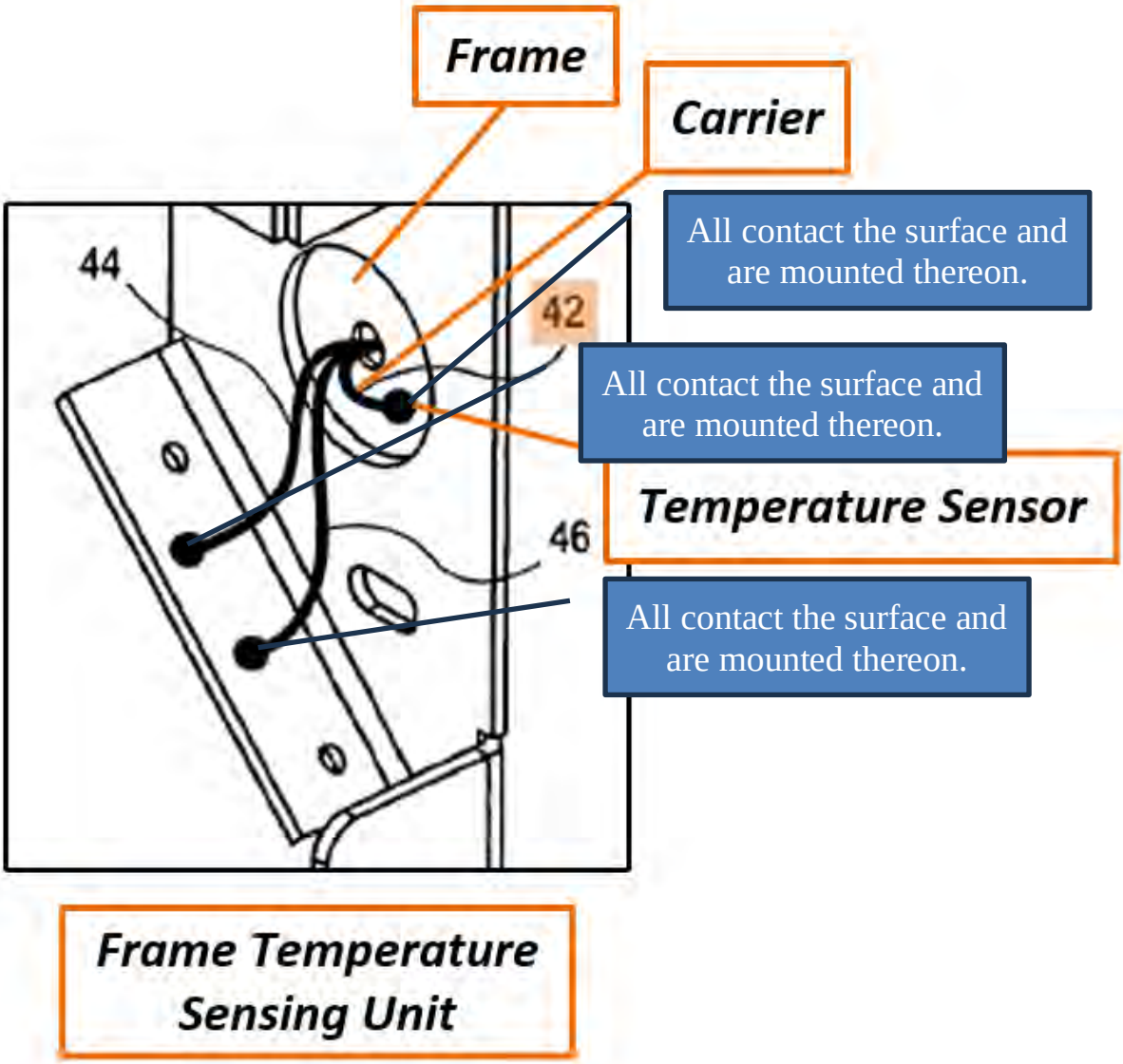

75. Carter also does not provide for an air pocket behind the board or carrier of the sensors. Therefore, in two respects, Carter fails to teach this aspect. As noted above, the door latch assembly in Carter is usually metal based. Therefore, temperature is conducted through such an assembly and Carter does not perform the claimed function "minimizing heat transfer contacts between said sensing units and said housing means." Practically in the '181 Patent specification, a rib like

arrangement is discussed as well as a (possible) post system. From the Figures and the lack of alternative explanation, the sensors in Carter merely rest on the housing.

76. The Petition also indicates: "King's ***sensor unit*** includes "an ambient air temperature sensor, an ambient humidity sensor and a glass ***temperature sensor***," where "[t]he electrical connections are made by using a flex circuit." EX.1005, 1:54–60. The flex circuit (***carrier***) serves to physically locate and secure the sensors and functions as a "thermal barrier." *See, e.g.*, EX.1005, 1:66–2:7, 3:3–19 ("Sensors 20, 22, and 24 are typically soldered to flex circuit end 42."); Pet., 45. While King may point to this thermal barrier, claim 13 reads "minimizing heat transfer contacts between said sensing units and said housing means." King's thermal barrier is not the same as minimizing heat transfer contacts since no effort is made to minimize such contacts and/or the interfacing (geometric) areas thereof by King's arrangement, with these contact surfaces directly related to conductive heat transfer. Also, King's circuit board is not a housing means; it is part of the sensor. Additionally, in the disclosed structure of the '181 Patent, the sensor is also mounted on a circuit board. *See* EX.1001, 7:13-14 and Fig. 8. King's board does not provide for a housing means that provides thermal isolation and is not indicated as being part of the housing.

77. King neither provides for the temperature sensor being held away from the window nor an air pocket behind the board/carrier of the sensor. This is

because the sensor sits on the frame without minimizing contact and there is no air barrier behind the board/carrier of the sensor. Therefore, neither Carter nor King make this aspect of the claims obvious.

G. Kotani's modular humidity meter does not provide the claimed housing means or the dual-unit thermal isolation in the refrigerated case context.

78. Kotani is a general-purpose humidity/temperature module with on-board processing, provided housing with substantially differing thermal exposure and/or bias from ambient conditions. It does not teach or suggest integrating a frame temperature sensing unit within the same housing with dew-point components while simultaneously achieving the '181 Patent's minimized thermal contacts and insulated air pockets tailored to a refrigerated display case's frame geometry nor a refrigerated display case's door geometry.

79. Using Kotani for dew point sensing, as Petitioner suggests, would not supply the claimed housing means or the co-location and mutual isolation of distinct sensors within air pockets as claimed in the '181 Patent. In practice, a POSITA would expect interaction of the Kotani with the cold frame (and/or heated frame during periods of frame heating) and airflow patterns that Kotani does not address; retrofitting Kotani to achieve the '181 Patent housing performance would involve non-trivial redesign with uncertain results.

H. Gatling does not bridge the structural and algorithmic gaps.

80. Gatling's multi-circuit arrangements and remote supervisory concepts are orthogonal to the '181 Patent's specific case-level controller, dew-point-referenced hysteresis algorithm, and housing structures. They do not cure the Petition's failure to identify the corresponding structures for the means-plus-function elements.

I. "Mathematical equivalence" and "binary design choice" characterizations are incorrect and overlook control engineering realities.

81. In field systems, control stability, hysteresis width, and insulation from noise are not abstract algebraic choices. Preselecting dew-point-based activation and deactivation set points of the '181 Patent allows a designer to tailor the onset and cessation of heat relative to the psychrometric margin most directly tied to condensation risk in any application. Substituting ambient-based (dry bulb temperature) deactivation has practical effects on cycling, dwell times, and energy use. A POSITA would not deem these "binary design choices" that yield the same performance.

82. Likewise, the notion that a POSITA would have had a "reasonable expectation of success" stitching together Carter's mixed control triggers with Beatenbough's pulse activation and delivery and King's glass-package housing to yield the '181 Patent's specifically claimed algorithm and housing is not supported. The proffered combinations materially change reference variables and

packaging constraints and would require iterative redesign and validation to ensure accurate dew-point anticipation and stable operation in a case-mounted controller—far more than routine substitution.

J. Data storing means and wireless access means are not disclosed by generic references to processors and remote updates.

83. The ’181 Patent discloses local case controller architecture storing data “related to readings at said sensing units and operation of the frame/door heater” and enabling wireless access for diagnostics and remote updating of control parameters used in dew-point-based anticipation. The Petition’s reliance on generalized notions that “processors store data” or that “remote updates were known” does not provide the corresponding structures or the integrated implementation at the case controller level interacting with the specific dew-point control algorithm and local sensor housing taught by the ’181 Patent.

K. Secondary Considerations

84. To the extent evidence is presented of commercial success, industry adoption, or long-felt but unresolved need for stable, energy-efficient condensation control at refrigerated display cases using dew-point-referenced dual set points and compact, thermally isolating housing structures, those considerations would further support nonobviousness. In my experience, accurate, practical, robust dew-point anticipation with reliable hysteresis at the case-level controller was not a solved

problem by 2005 and required the sort of holistic structural and algorithmic design disclosed in the ’181 Patent.

XI. Conclusion

85. The ’181 Patent claims are directed to integrated structural, algorithmic and control solutions that work together: a case-level controller executing a particular dew-point-referenced controls flow using preselected set points on both activation and deactivation, co-designed with housing structures that thermally isolate and stabilize readings of both the frame temperature sensor and dew point sensing components via insulated air pockets and minimized heat-transfer. The Petition and Dr. Henze’s declaration replace those specifics with different objectives, different references, and different packaging that are not the same, not equivalent, and would not have been predictably combined by a POSITA with a reasonable expectation of success.

86. For these reasons, it is my opinion that Petitioner has not shown that the challenged claims of the ’181 Patent are unpatentable for obviousness.

I declare under penalty of perjury that the foregoing is true and correct to the best of my knowledge and belief.

Executed on December 29, 2025.

/Michael A. Pollock/
Michael A. Pollock, P.E.
Principal Engineer, Cogent Experts, LLC