Complete Infinity 60 Series Installation Manual

99-25726-I001 February 2023 Rev. B

Copyright © 2022 Anthony, Inc. An Anthony Company All rights reserved. Information in this document is subject to change without notice. No part of this document may be reproduced or transmitted in any form or by any means, electronic or mechanical, for any purpose, without permission of Anthony, Inc. All product and company names are trademarks ™ or registered® trademarks of their respective holders. Use of them does not imply any affiliation with or endorsement by them unless otherwise specified.

Anthony Locations

Anthony is a manufacturer and solutions provider of glass doors, lighting systems, and display equipment for use in commercial refrigeration systems. For more information on Anthony, please visit www.anthonyintl.com.

North America Locations

Sylmar, CA
Corporate Offices
12391 Montero Avenue
Sylmar, CA 91342
Phone: 818.365.9451
Toll-Free US: 800.772.0900
Canada: 800.336.8825
Fax: 818.365.2441

Madison, GA
1101 Sovis Rd
Madison, GA 30650
Phone: 706.342.9300
Fax: 706.342.9303

For Replacement parts go to www.anthonystore.com

For our latest instructional and informative videos visit our YouTube channel

For the latest news and upcoming product releases follow us on these social media platforms:

TWITTER YOUTUBE LINKEDIN

Applicable Walk-In Models

Infinity 60 Series	I60N

Copyright © 2022 Anthony, Inc. Anthony Company All rights reserved. Information in this document is subject to change without notice. No part of this document may be reproduced or transmitted in any form or by any means, electronic or mechanical, for any purpose, without permission of Anthony, Inc. All product and company names are trademarks ™ or registered® trademarks of their respective holders. Use of them does not imply any affiliation with or endorsement by them unless otherwise specified.

Anthony products identified in this manual are designed and certified to meet or for safety, and for sanitation standards.

European products meet requirements.

Each customer is responsible for final site approval.

Table of Contents

Applicable Walk-In Models 2
INTRODUCTION 6
Proper use of Anthony Products 6
Qualified Personnel 6
SECTION 1 - SAFETY 7
Safety Messages 7
Signal Words 7
Safety Colors 7
Safety Alerts Symbols 8
User Safety 9
General Safety Rules 9
Safety equipment – Personal Protective Equipment 9
Electrical Connections 9
Precautions before work 9
Equipment List & Tools 10
Installation Tips 10
SECTION 2 – STANDARD WALK-IN LINE-UP FRAME INSTALLATION 11
Tools Required 11
Frame Unpacking 11
Figure 2.1: Frame Crate 11
Frame Handling during Installation 12
Figure 2.2: Clamps to insert Frame into Net Opening 12
Figure 2.3: Mullions Attention Label 12
Other Frame Installation Recommendations & Suggestions 13
Net Opening & Frame installation 14
Figure 2.4: Frame Alignment, Squareness, and Plumb 15
Shimming the Frame 16
Figure 2.5: Frame Shimming and Sealing Details 17
Properly Sealing the Frame 18
Continuous Lineup Frame Installation 19
Two (2) Frame Section Line-up 19
Figure 2.6: T-Trim installation 20
Three (3) or more Frame Sections Line-up 20
Figure 2.7: Continuous frame sections layout 21
Figure 2.8: T-Trim installation 21
Figure 2.9: Last Frame installation 22
Figure 2.10: Second to Last Frame installation 22
Frame Electrical Wiring Connections 23
Conduit Exit Location 23
Figure 2.11: Conduit Exit location 23
Figure 2.12: Wiring Labels 23
Figure 2.13: Wiring Diagrams 24
SECTION 3 – DOOR UNPACKING INSTRUCTIONS 25
Figure 3.1. Shipping Crate containing Anthony Doors 26
Opening Shipping Crate 26
Figure 3.2. Unscrewing the top portion of the Shipping Crate 27
Figure 3.3. Removing the top portion of the Shipping Crate 28
Figure 3.4. Offsetting crate weight for removing doors from the crate 28
Figure 3.5. Removing Front side of Shipping Crate 29
Removing Doors from Shipping Crate 30
Figure 3.6. Removing Door from Shipping Crate Correctly 30

EX.2015 / IPR2025-00559 / Page 4 of 85
Anthony Inc. v. ControlTec, LLC

SECTION 4 – DOOR INSTALLATION 31
DOOR HANDLING 31
DOOR INSTALLATION 31
Figure 4.1: Seating Door onto Torque Master 32
Figure 4.2: Dielectric Grease in SOCKET (hinge pin plug) receptacle 33
Figure 4.3: Engage Hinge Pin to Frame 34
Figure 4.4: Secure hold-open mounting screw 35
TORQUE MASTER™ AND SAG ADJUSTMENT 36
Figure 4.5: Torque Master ™ 36
Sag Adjustment 36
Torque Adjustment: 37
Clean up Work Area 38
Check door for Functionality 38
SECTION 5 - REQUIRED FUNCTIONALITY FOR COMPLETE INSTALL 39
Door Frame Assembly 39
Gasket 39
Hinge Pin 39
Hold Open Assembly 39
Torque Master Assembly 39
SECTION 6 - COOLER* STORE CONDITION REQUIREMENTS 40
Table 6.1: Operating conditions 40
OPERATING REQUIREMENTS AND RECOMMENDATIONS FOR OPTIMAL PERFORMANCE 40
Figure 6.1 Product Stocking – Shelves required to be fully stocked 41
Figure 6.2 Evaporator Air Deflector - Contact evaporator manufacturer for recommended air deflector. 41
SECTION 7 - ROUTINE PREVENTATIVE MAINTENANCE 42
RECOMMENDED MAINTENANCE INSPECTION AND CLEANING INTERVALS 43
MAINTENANCE RECOMMENDATIONS 43
- Cooler Temp & Defrost Settings 43
- Frame & Door 43
- Door/Frame Hinging Pin & Receptacle Area 43
- TorqueMaster™ 44
- Gaskets 44

CLEANING ROUTINE 44
SECTION 8 - TROUBLESHOOTING 45
Table 8.1: Installation Troubleshooting 45
Table 8.2: General Troubleshooting 46
SECTION 9 – FRAME REPLACEMENT PARTS 47
Figure 9.1 Frame Assembly for Infinity 60 Series Normal Temperature for Replacement Parts 47
Table 9.1 Frame Assembly for Infinity 60 Series Normal Temperature for Replacement Parts List 48
SECTION 10 – DOOR REPLACEMENT PARTS 49
Figure 10.1 Door Assembly for Infinity 60 Series Door, for Replacement Parts 49
Table 10.1 Door Assembly for Infinity 60 Series Replacement Parts List 50
SECTION 11 – OPTIMAX 7 LED LIGHTING FIXTURE REPLACEMENT 51
Replacement Part Numbers 51
REPLACEMENT INSTRUCTIONS 52
End Jambs 54
SECTION 12 – REMOVING & REPLACING THE TORQUE ROD 55
Figure 12.1 Torque Rod location. 55
Figure 12.2 Removing torque rod from the door. 56
Figure 12.3 Removing torque rod from the door. 56
SECTION 13 – REMOVING & REPLACING THE HOLD-OPEN ASSEMBLY 57
REMOVING THE HOLD-OPEN ASSEMBLY 57
Figure 13.1 Removing hold-open assembly from door. 57
REPLACING THE HOLD-OPEN ASSEMBLY 58
Figure 13.2 Hold-open Assembly 58
SECTION 14 – REMOVING & REPLACING THE HINGE PIN 59
SECTION 15 - TORQUE MASTER REPLACEMENT 61
Figure 15.1: Torque Master Replacement 61

APPENDIX A - GASKET REPLACEMENT GUIDELINES **63**
PRELIMINARY CONSIDERATIONS FOR SERVICING GASKETS 66
Tools Required 66
Recommendations and Suggestions 66
ORDERING REPLACEMENT GASKETS 66
GASKET REMOVAL 67
GASKET INSTALLATION 67
APPENDIX B – ANTI-FOG MAINTENANCE **69**
Care and Cleaning 69
APPENDIX C – POM LOCK INSTALLATION **70**
Figure C.1: Pom Lock Specifications 70
STANDARD POM LOCK 71
Figure C.2: Plug Removal 71
Figure C.3: Hinge Pin Access Plate (lock retainer) 71
Figure C.4: Front View POM Lock 72
APPENDIX D – POM LOCK RETROFITTING **73**
Figure D.1: POM Lock Retrofit Kit 73
Figure D.2: Template Offset location 74
Figure D.3: Template Placement on Frame Side view 74
Figure D.4: Access Plate Assembly 75
Figure D.5: Front View POM Lock 75
APPENDIX E – ANTHONY ENERGY CONTROLLER **76**
Features 76
Location 76
Figure E.1: 4-Door Frame Layout Example for Energy Controller and Sensor Locations 76
PROGRAMMING, SETTINGS, AND PARAMETERS 77
Sensor Button 77
Figure E.2: Energy Controller (Dew Point Sensor) 77
SETTINGS 77
Offset Status Indicator Mode 77
24-Hour Heat Mode 78
Offset Setting Options 78
TROUBLESHOOTING 79
REPLACEMENT PART NUMBERS 79
REPLACEMENT INSTRUCTIONS 79
APPENDIX F – REPLACING FRAME MOUNTED CYLINDER LOCKS **80**
APPENDIX G – RETROFITTING FOR FRAME MOUNTED CYLINDER LOCKS **81**
TOOLS REQUIRED 81
REVISION HISTORY **84**

Introduction

This manual provides information required to perform installation, repairs, and required maintenance to the Anthony Frames and Doors. This manual is intended as a written guide for personnel who are properly trained and qualified to safely use a variety of different equipment and tools required during the installation, repairs, and performing maintenance of the Anthony Frames and Doors.

All personnel/contractors assigned to install Anthony Frame and/or Doors must read this manual in its entirety as one of the steps in being certified to install and work on Anthony doors. Failure to read and thoroughly understand the material contained in this manual may ultimately result in damage to the equipment, and injury to personnel, and could void the warranty.

The components and systems described in this manual may be operated only by personnel qualified for the specific task by the relevant documentation, warning notices, and safety instructions. Qualified personnel are those who, based on their training and experience can identify risks and avoid potential hazards when working with these types of components and systems.

Proper use of Anthony Products

Anthony's products may only be used for the applications described in the catalog and the relevant technical documentation. If products and components from other manufacturers are used, these must be recommended or approved by Anthony. Proper transport, storage, installation, assembly, commissioning, operation, and maintenance are required to ensure that the products operate safely and without any problems. The permissible ambient conditions must be complied with.

Anthony has reviewed the contents of this publication to ensure consistency with the hardware and/or software described. Since variance cannot be precluded entirely, we cannot guarantee full consistency. However, the information in this publication is reviewed regularly and any necessary corrections will be included in subsequent editions. Specifications and information are subject to change without notice.

Qualified Personnel

The Anthony product/systems described in this installation manual should only be operated only by personnel qualified for the specific task following the relevant documentation warning notices and safety instructions. Qualified personnel who, based on their training and experience, can identify risks, and avoid potential hazards when working with these Anthony products/systems.

EX.2015 / IPR2025-00559 / Page 7 of 85
Anthony Inc. v. ControlTec, LLC

Section 1 - Safety

Safety Messages

This manual includes general, task-specific, and important Safety Messages. Each Safety Message includes several elements, Signal Words, Safety Alert Symbols, Safety Colors, and Safety Message. The following is an example of a safety message with all elements included.

These Safety Messages are defined by the level of severity and are found throughout the manual indicating measures that must be taken while performing the specific task at hand.

Signal Words

- **DANGER:** Indicates a hazard that, if not avoided, **WILL** result in death or serious injury.
- **WARNING:** Indicates a hazard which, if not avoided, **COULD** result in death or serious injury.
- **CAUTION:** Indicates a hazard that, if not avoided, **WILL** result in minor or moderate injury.
- ***NOTICE:*** Indicates a hazard or practice that, if not avoided, **CAN** result in equipment or property damage.
- **SAFETY INSTRUCTIONS:** Indicates safety-related instructions, procedures, or the locations of safety equipment.

Safety Colors

COLOR	SAMPLE	
RED		DANGER
ORANGE		WARNING
YELLOW		CAUTION
BLUE		NOTICE
GREEN		SAFETY INSTRUCTIONS
GREY		ASSEMBLY, MAINTENANCE OR SERVICE ALERT

Safety Alerts Symbols

Your safety and the safety of others are very important. The following Safety Alert Symbols will be used in conjunction with the Safety Messages to warn of potential risks when installing or maintaining your Anthony Door. These Safety Alert Symbols communicate hazardous information quickly and reinforce the Safety Message without the use of words and across language barriers. These safety messages alert you to potential hazards that could hurt you or others or render damage to Anthony's products. Each safety message is associated with a safety alert symbol. These symbols are found throughout the manual. The definition of these symbols is described below:

Protective Eyewear– Potential risk of eye injuries, protective eyewear required when performing this, and any other associated tasks.

Protective Footwear– Potential risk of injury to your feet, protective footwear is required when performing this and any other associated tasks.

Protective Gloves– Potential risk of injury to your hands, protective gloves required when performing this, and any other associated tasks.

Hearing Protection– Potential risk of injury to your ears, protective ear coverings required when performing this, and any other associated tasks.

Safety Vest– Wearing a high visibility vest is required when performing this and any other associated tasks.

Long Pants– Wearing long pants is required when performing this and any other associated tasks.

Read Instructions symbol– Read and understand the manual and all other safety instructions before proceeding.

Stop – Before you begin: Installation of this assembly requires a person familiar with the construction and operation of electrical systems and the Hazards involved. Read instructions completely and carefully.

Risk of Electrical Shock– Potential risk of Electrical Shock; pay close attention to instructions when performing this and any other associated tasks.

Commercial Refrigeration – This symbol indicates for use inside a commercial refrigeration case with packaged foods only.

Warning – To reduce the risk of fire, electrical shock or injury observe the following:

- *Use this unit in the manner intended by the manufacturer.*
- *Turn the power off before removing the existing lighting system and follow appropriate lockout/tag-out safety procedures*

Heavy object symbol– Single person lift could cause muscle strain or back injury. Get help when moving or lifting. Use other proper lifting aids, seek assistance, and always use proper lifting techniques when moving.

Note – This will contain information that is helpful for a procedure, condition, or operation. Read instructions completely and carefully.

Handle with care symbol– Indicates that specific items require care when handling.

Pinch Hands symbol – Potential risk of hands sustaining an injury in pinching points.

User Safety

General Safety Rules

These safety rules apply:

- Always keep the work area clean.
- Pay attention to the risks presented by obstacles or other people in the work area.
- Avoid all electrical dangers.
- Pay attention to the risks of electric shock or arc flash hazards.
- Always bear in mind the risk of pinching, electrical accidents, and broken glass.
- Always seek assistance from another person when handling frames and doors

Safety equipment – Personal Protective Equipment

Use safety equipment according to the company, local, and state regulations. Use this safety equipment within the work area when performing any type of work on Anthony Doors:

- Safety goggles
- Protective shoes
- Protective gloves
- Long Pants
- Hearing protection
- First-aid kit
- Other Safety devices

Electrical Connections

Electrical connections must be made in compliance with all international, national, state, and local regulations. For more information about requirements, see "***Section 2- Frame Electrical Wiring Connections–"*** of this manual detailing requirements.

Precautions before work

Observe these safety precautions before you work on the installation or service of any Anthony product:

- Provide a suitable barrier around the work area; For example, a caution sign/tape, as allowed by the site manager.
- Ensure all safety guards are in place and secure.
- Recognize the site emergency exits, eyewash stations, emergency showers, and toilets.
- Ensure a clear path of retreat.
- Ensure the door will not fall over and/or injure people and/or damage property.
- Ensure lifting equipment is in good condition.
- When using a lifting device, safety device, or other equipment seek assistance when needed.
- Ensure the door is thoroughly clean.
- Ensure quick access to a first-aid kit.
- Disconnect and lockout power before servicing.

Equipment List & Tools

The following is a list of all the different equipment, tools, materials, and other things you will need when installing the Anthony 101N Frame and doors.

Equipment:

- *Safe movers*
- *Dollies*
- *Ratchet straps*
- *Clamps*
- *Pallet Jack*
- *J-bar*
- *Broom*
- *2" x 4" Studs*

Frame/Door Installation:

- *Shims*
- *Silicone/Butyl*
- *Caulk gun*
- *4' - 6' level*
- *Rubber/plastic mallet*
- *Wire stripper/cutter*
- *Wire nuts*
- *Tape measure*
- *Towels / rags*

Tools:

- *Voltage tester*
- *Soldering Iron*
- *#2 Philips screwdriver*
- *Flat-head screwdriver*
- *Needle-nose pliers*
- *Razor Knife*
- *Utility knife*
- *5/32" Hex Key*
- *7/16 & 1/2" wrenches*
- *Wireless Drill/Driver*

Materials:

- *High Viscosity Dielectric grease High Viscosity Dielectric grease For Harsh Conditions* (Anthony P/N: 98-25497-0001)
- *NSF Approved Food Grade Silicone Sealant*
- *Plywood Shims*
- *Foam glass cleaner (Ammonia Free)*
- *Black Paint marker*

Installation Tips

- Complete replacement of wire assemblies is recommended whenever required. Splice wires only if necessary, using proper materials: such as electrical tape, wire nuts, flux core solder, and heat shrink.
- Apply liquid soap to rail plastic covers and gaskets upon installation to facilitate insertion into mounting grooves.
- Keep doors and frames clean for product efficiency. This can also help reduce energy consumption and potential health hazards.
- Whenever binding gasket or plastic parts use food-grade silicone.
- Always use the correct tool for the job to be performed. This ensures proper installation and minimizes safety risks.
- If there is any doubt about the work to be performed, consult with a certified technician or Anthony's representative.
- Preventative maintenance is recommended to ensure product longevity.

PROTECTIVE GEAR NOTICE	
	Protective Gloves– Potential risk of injury to your hands, protective gloves required when performing this, and any other associated tasks.
	Footwear Protective – Potential risk of injury to your feet, wearing protective footwear is required when performing this and any other associated tasks.

Section 2 – Standard Walk-In Line-Up Frame Installation

Tools Required

Refer to *"Equipment List & Tools"* in Section 1 for a complete list of all equipment, tools, materials, and other things needed for installation. If the Frames are not installed upon arrival, they should be protected from the environmental conditions, and ensure storage of the product indoors at a normal room temperature of 75°F or less, do not store outside, weather can damage the frame and cause issues such as plastic deformation.

PROTECTIVE GEAR NOTICE	
	Protective Gloves– Potential risk of injury to your hands, protective gloves required when performing this, and any other associated tasks.
	Footwear Protective – Potential risk of injury to your feet, wearing protective footwear is required when performing this and any other associated tasks.

Frame Unpacking

Before beginning installation follow the instructions below to unpack the frames for shipping crates safely and effectively.

1. Locate the factory painted instructions on the crate which read "OPEN ON THIS SIDE" (they are painted with red ink).
2. Carefully, place the crate flat on the floor with the "OPEN ON THIS SIDE" facing up.
3. Remove all screws from the top and bottom wood planks to remove, followed by the center plank.
4. Carefully, pull the frame from the create and prepare to install it in the case.

Figure 2.1: Frame Crate

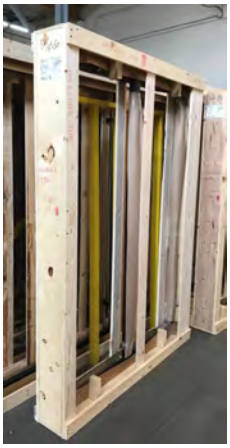

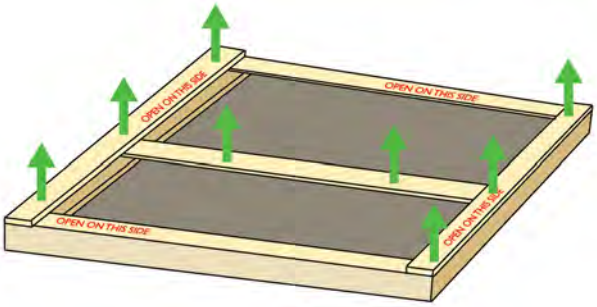

NOTICE	
	Note – *When you have multiple frames, please refer to the "Continuous Lineup Frame Installation" instructions in this section. Depending on your configuration you will have two (2) to three (3) different frames (Right Flanged, Continuous, and Left Flanged).*

Frame Handling during Installation

During installation take special care not to push on or use mullions to lift the frame. Applying force to mullions may cause damage and affect the frame's optimal performance. If needed, we recommend using either a Sliding or Speed Clamp to align and squeeze the Frame into the net opening (see Figure 2.2). When using clamps ensure to gradually squeeze slowly to prevent the frame from bending or cracking.

PROTECTIVE GEAR NOTICE	
	Protective Eyewear– Potential risk of eye injuries, protective eyewear required when performing this, and any other associated tasks.
	Protective Gloves– Potential risk of injury to your hands, protective gloves required when performing this, and any other associated tasks.
	Footwear Protective – Potential risk of injury to your feet, wearing protective footwear is required when performing this and any other associated tasks.

Figure 2.2: Clamps to insert Frame into Net Opening

**Note: Frame pictured here may differ slightly from Frame for the Infinity 60 (your frame will include frame mounted gaskets); Installation is essentailly the same procedure and set required to install.*

1. Once Frame(s) are completely installed proceed to remove the Yellow Labels from the mullions see Figure 2.3 below.

Figure 2.3: Mullions Attention Label

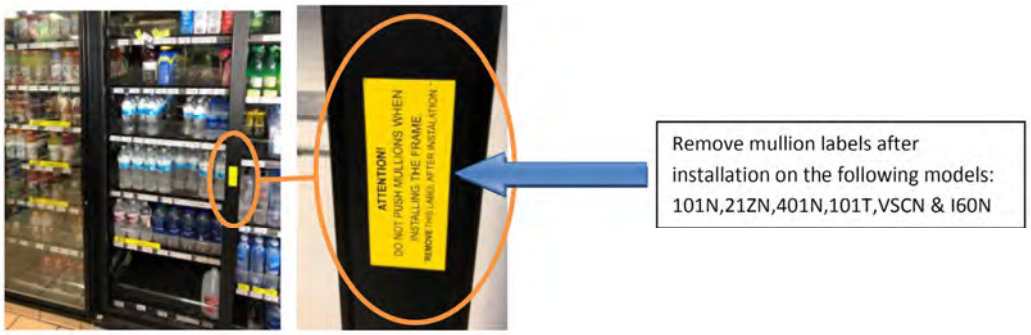

Other Frame Installation Recommendations & Suggestions

1. Complete replacement of wire assemblies is recommended whenever required.
2. Apply liquid soap to rail plastic covers and gaskets upon installation, to facilitate insertion into mounting grooves.
3. Keep doors and frames clean for product efficiency. This can also help reduce energy consumption and potential health hazards.
4. Whenever binding gasket or plastic parts only use food-grade silicone.
5. Always use the correct tool for the job to be performed. This ensures proper installation and minimizes safety risks.
6. If there is any doubt about the work to be performed, consult with a certified technician or Anthony/Anthony representative.
7. Preventative maintenance is recommended to ensure product longevity.
8. Ensure to have correct replacement screw size, quantity, and type if replacing with non-Anthony or non-Anthony hardware.
9. Do not over tighten screws when installing.

EX.2015 / IPR2025-00559 / Page 14 of 85
Anthony Inc. v. ControlTec, LLC

Net Opening & Frame installation

Read the instructions in this Section completely before installing the frame. Before installing the frame, confirm that the size of the net opening accommodates the finished frame, net opening should be larger by 1/8” than the frame size, there should be a gap of 1/8" on top, 1/8" on the right side, and 1/8" on the left side. If the gap tolerances exceed 3/8”, the net opening will have to be reduced to reduce the gap within 1/8”. Also, ensure that there is a minimum of 3-1/2” clearance from floor to top of the bottom sill (opening).

PROTECTIVE GEAR NOTICE	
	Protective Eyewear– Potential risk of eye injuries, protective eyewear required when performing this, and any other associated tasks.
	Protective Gloves– Potential risk of injury to your hands, protective gloves required when performing this, and any other associated tasks.
	Footwear Protective – Potential risk of injury to your feet, wearing protective footwear is required when performing this and any other associated tasks.

The following instructions will ensure proper frame installation:

1. When installing the frame, **DO NOT** install the Frame directly on Sheetrock, the frame is designed to be installed on Cooler/Refrigeration Cases/Freezer Boxes only.
2. Ensure that the Sealing Frame Flap is fully engaged to, Sill, Header, and Jack Studs creating a seal without any gaps (see Figure 2.4).
3. Make sure to **DO NOT** force the frame if the fit is too tight, doing so may cause you to break the Sealing Frame Flap or tweak the Frame.
4. Insert a mounting screw into a mounting hole in each corner of the frame and tighten each screw until it is approximately a quarter inch from being flush.
5. Check the frame is aligned properly or square.
6. Use a measuring tape to measure diagonally from one corner to the opposite and note the distance.
7. Measure the distance between the remaining two corners.
8. Both measurements should be the same, or within a 1/16” difference.
9. Confirm the frame and frame flanges are vertically and horizontally aligned (plumb) to the wall surface around the net opening.
10. Place a level on the top flange of the header frame to check if it is horizontally aligned.
11. If the top of the header frame sags or bows, correct it as necessary.
12. When the frame is completely aligned, tighten all mounting screws securely until each is flush with the frame surface. **DO NOT** over-tighten the screws, as this can cause the frame to become out of square.
13. Check the entire frame to ensure installation is correct. If needed see refer to the “Shimming Frame” section for instructions on how to use shims to align the frame properly.

WARNING	
	Warning: DO NOT over *tighten screws onto the frame, as this may cause bowing, sagging, or the frame to become out of square. This will cause installation issues with Door's proper function. Adjusted the frame as needed to ensure it is square and free of bowing and sags.*

EX.2015 / IPR2025-00559 / Page 15 of 85
Anthony Inc. v. ControlTec, LLC

Figure 2.4: Frame Alignment, Squareness, and Plumb

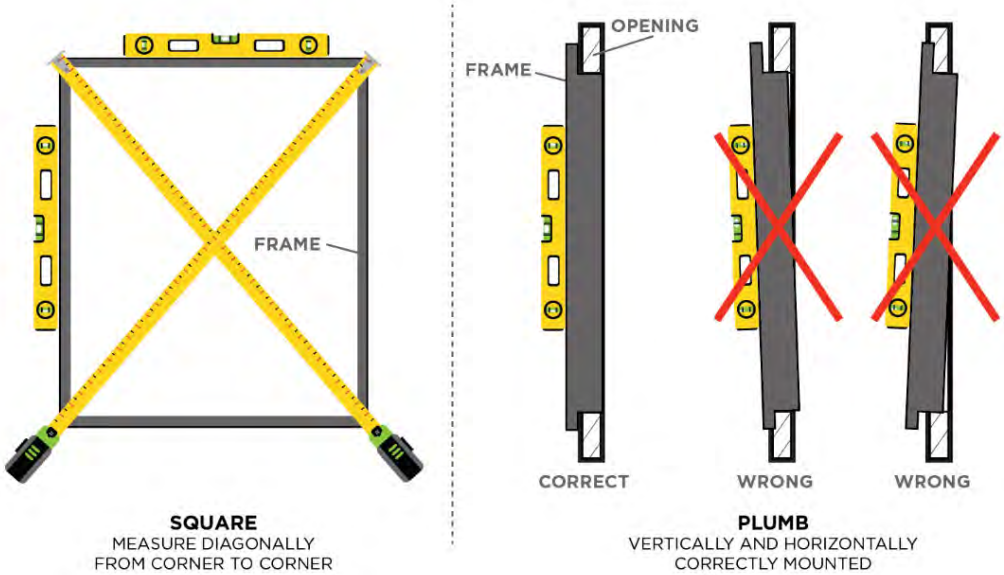

WARNING	
	Warning: *Use only food-grade silicone sealant (add caulking for larger gaps) to seal the gap between the frame and the surrounding wall, inside the case, cooler or freezer. Not following these procedures can void Anthony's Service & Warranty on condensation and ice build-up issues.*

Shimming the Frame

Shimming is only to be used when necessary and will primarily be done at the header (top) of the frame and opening. If the gap between the frame and net opening is greater than 1/8", proceed to shim the gap for a proper fit. Refer to Figure 2.5, below for a detailed view of Shim location. If everything is aligned, squared, plumb, and gaps do not exceed 1/16" skip the shimming process and proceed to seal the Frame refer to "Sealing the Frame" below for instructions.

PROTECTIVE GEAR NOTICE	
	Protective Eyewear– Potential risk of eye injuries, protective eyewear required when performing this, and any other associated tasks.
	Protective Gloves– Potential risk of injury to your hands, protective gloves required when performing this, and any other associated tasks.
	Footwear Protective – Potential risk of injury to your feet, wearing protective footwear is required when performing this and any other associated tasks.

The following instructions will ensure to properly shim frame when necessary:

1. Acquire sturdy, penetrable material, such as plywood. The thickness of the material should be wedge-shaped and slightly less than the gap to be filled, remember if the gap is larger than 1/8" opening must be reduced properly to accommodate the frame.
2. When using shims, they must be installed from left to right or top to bottom, **PARALLEL** to frame width or height.
3. Measure the length of the gap (height or width of the frame) and cut the shim material to 1/16 of an inch less than the measured length.
4. Install the shim using the same type of mounting hardware that will be used to install the frame. Be certain that the shim installation hardware will not interfere with the frame installation hardware.
5. If necessary, cut a second shim to the same length and install it on the opposite side of the net opening.
6. If the adjacent sides of the net opening need to be shimmed, repeat the previous steps, matching the shim length to the frame sides of the net opening (less 1/16 of an inch).
7. Shims must **NOT** be used perpendicularly.
8. Excess shim material **MUST** be removed to ensure proper sealing to the frame.
    A. When the Frame extends past Sill, Header, or Jack Studs ensure that excess shim material does not extend (in-depth, i.e., front to back) past the Sill, Header, or Jack Studs (*see Figure 2.5, Example 1 below*)
    B. When Sill, Header, or Jack Studs extend past the Frame ensure that excess shim material does not extend (in-depth, i.e., front to back) past the Frame (*see Figure 2.5, Example 2 below*)

Figure 2.5: Frame Shimming and Sealing Details

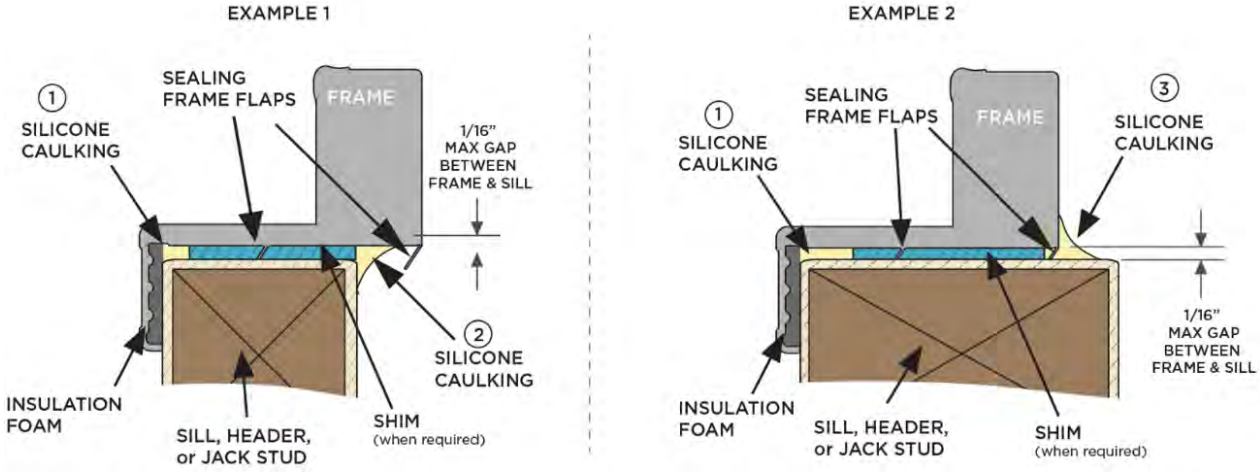

Properly Sealing the Frame

The electrical connection at the Junction Box where the wires enter the frame, and where the wires enter the raceway in the frame must be sealed with NSF Approved Food Grade Silicone Sealant (RTV-108) at the time of installation. Ensure to seal the gap between the frame and the surrounding wall, inside the case, cooler or freezer. Not following these procedures can void Anthony and Anthony's Service & Warranty on condensation and ice build-up issues. Refer to Figure 2.5, on the previous page for clarification.

The following instructions will ensure a proper seal of the Frame:

1. Always ensure that you can locate the Foam insert which lines the entire flange around the Frame; DO NOT remove this foam, it is critical to ensure proper insulation.
2. Ensure that the Sealing Frame Flap is fully engaged to, Sill, Header, and Jack Studs creating a seal without any gaps.
3. Ensure that any excess shimming material is removed as instructed above in "Shimming Frame".
4. If your installation is like Example 1 in Figure 2.5, proceed to seal with Silicone Sealant (RTV-108) as shown.
5. If your installation is like Example 2 in Figure 2.5, proceed to seal with Silicone Sealant (RTV-108) as shown.
6. Follow the manufacturer's curing instructions for the Silicone Sealant (RTV-108) to ensure proper use.
7. Once Silicone Sealant is cured double-check for any remaining gaps that require more sealant.

WARNING	
	Warning: *Ensure to use silicone approved for use in commercial refrigeration applications which meets all requirements and guidelines. Use only food-grade silicone sealant (add caulking for larger gaps) to seal the gap between the frame and the surrounding wall, inside the case, cooler or freezer. Not following these procedures can void Anthony's Service & Warranty on condensation and ice build-up issues.*

Continuous Lineup Frame Installation

Use the following instructions for walk-in line-ups when more than one frame section(s) is required (applies to 101N, 101B & 101T walk-in configurations with more than one frame). These instructions will guide you on how to install multiple frames using the provided T-Trim(s) which seals the gap between any two (2) frames. Whether you have two or more frames use the instructions below to ensure proper installation of the entire frame line-up. When your installation only requires one frame section there is no need for T-Trim installation.

NOTICE	
	Note – *These instructions apply only to the 101N, 101B, and 101T in both Normal Temperature and Low-Temperature walk-in applications only. For Pass-Thru configurations please refer to "Section 18 – Pass-Thru Door Installation" for instructions on installation (which are limited to 1 and 2 door configurations).*

PROTECTIVE GEAR NOTICE	
	Protective Eyewear– Potential risk of eye injuries, protective eyewear required when performing this, and any other associated tasks.
	Protective Gloves– Potential risk of injury to your hands, protective gloves required when performing this, and any other associated tasks.
	Footwear Protective – Potential risk of injury to your feet, wearing protective footwear is required when performing this and any other associated tasks.

Two (2) Frame Section Line-up

The following instructions are for installations that required **two (2) frame sections only**:

1. To begin, set the first frame (ensure that the first frame has a full flange on the right side and continuous flange on the left side) against the far-right side of the net opening/case opening and install according to instructions previously noted in this section ensuring to square, plumb, secure, and seal the first frame (shim if needed).

2. Ensure the first frame is installed correctly, then set the second frame into the net opening/case opening (ensure that the second frame has a full flange on the left side and a continuous flange on the right side). Slide the second frame to the far left of the net opening/case opening and slide it snug frame against the opening. Ensure to square, plumb, secure, and seal the frame (shim if needed). Use instructions given on previous pages.

3. After installing the second frame insert a T-Trim between the first and second frames.

4. Once T-Trim is in place, insert binding bolts (sex bolts) through the right side of the first frame, and into the left side of the second frame. Tighten until frames are pulled together. Refer to Figure 2.6.

EX.2015 / IPR2025-00559 / Page 20 of 85
Anthony Inc. v. ControlTec, LLC

Figure 2.6: T-Trim installation

**Note: Frame pictured here may differ slightly from Frame for the Infinity 60 (your frame will include frame mounted gaskets); Installation is essentailly the same procedure and set required to install.*

Three (3) or more Frame Sections Line-up

The following instructions are for installations that required **three (3) or more frame sections**:

1. To begin, set the first frame (ensure that the first frame has a full flange on the right side and continuous flange on the left side) against the far-right side of the net opening/case opening and install according to instructions previously noted in this section ensuring to square, plumb, secure, and seal the first frame (shim if needed). To continue installing the next frame you will need to install the T-Trim between frames.

2. Ensure the first frame is installed correctly and proceed by placing T-Trim on the left end (continuous flange side) of the first frame, then set the second/next frame into the net opening/case opening (ensure the second frame is a continuous frame with continuous flanges on both ends) and slide it snug frame against the T-Trim and the first frame, ensuring you sandwich the T-trim snuggly between the first and second frame. See Figures 2.6 and 2.7.

Figure 2.7: Continuous frame sections layout

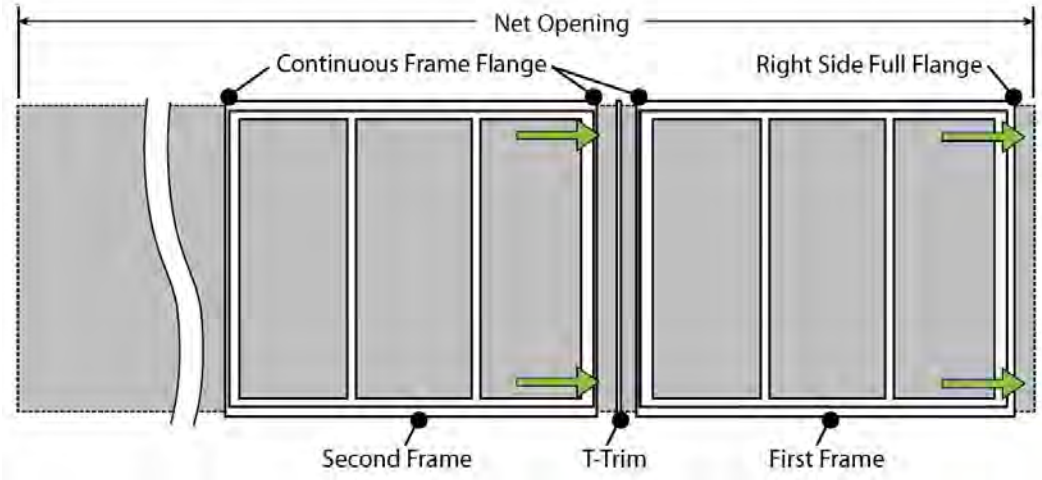

3. Once the first frame, T-Trim, and second frame are in place, insert binding bolts (sex bolts) through the right side of the first frame, and into the left side of the second frame. Tighten until frames are pulled together. Refer to Figure 2.8.

Figure 2.8: T-Trim installation

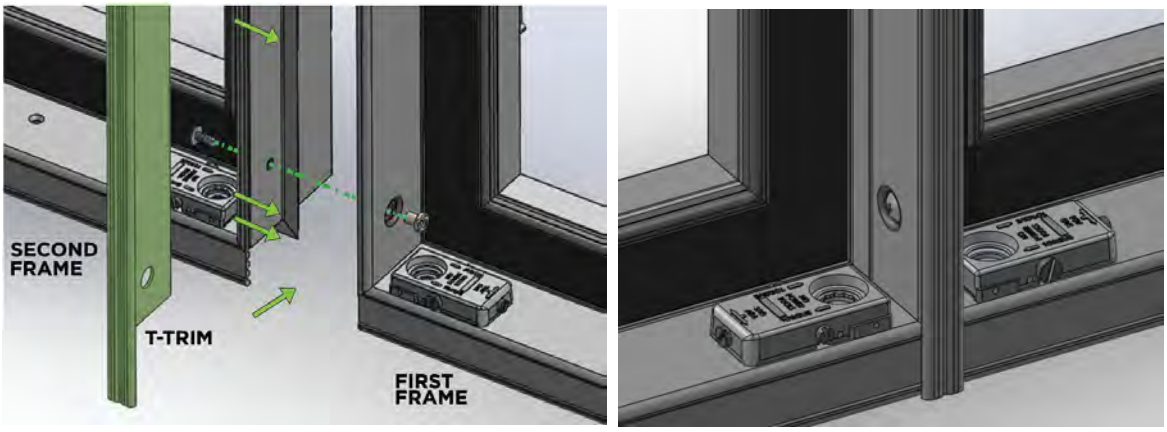

**Note: Frame pictured here may differ slightly from Frame for the Infinity 60 (your frame will include frame mounted gaskets); Installation is essentailly the same procedure and set required to install.*

4. Once the two frame sections and T-Trim are together and secured, ensure to square, plumb, secure, and seal the second frame (shim if needed). Use instructions given on previous pages.

5. Continue repeating Steps 1 and 4 if needed to accommodate numerous frames as needed.

6. Once you are ready to install the **second to last frame**, you will need to **STOP** and install the **last frame** before the second to last frame (ensure that the last frame has a full flange on the left side and continuous flange on the right side). Slide the last frame to the far left of the net opening/case opening and slide it snug frame against the opening. Ensure to square, plumb, secure, and seal the frame (shim if needed). Use instructions given on previous pages.

7. After installing the last frame proceed to install the second to last frame (ensure the second to last frame is a continuous frame with continuous flanges on both ends) into the net opening/case opening between the two (2) frames (last frame and third to last frame). Ensure to square, plumb, secure, and seal the frame (shim if needed). Use instructions given on previous pages. Refer to Figure 2.9.

Figure 2.9: Last Frame installation

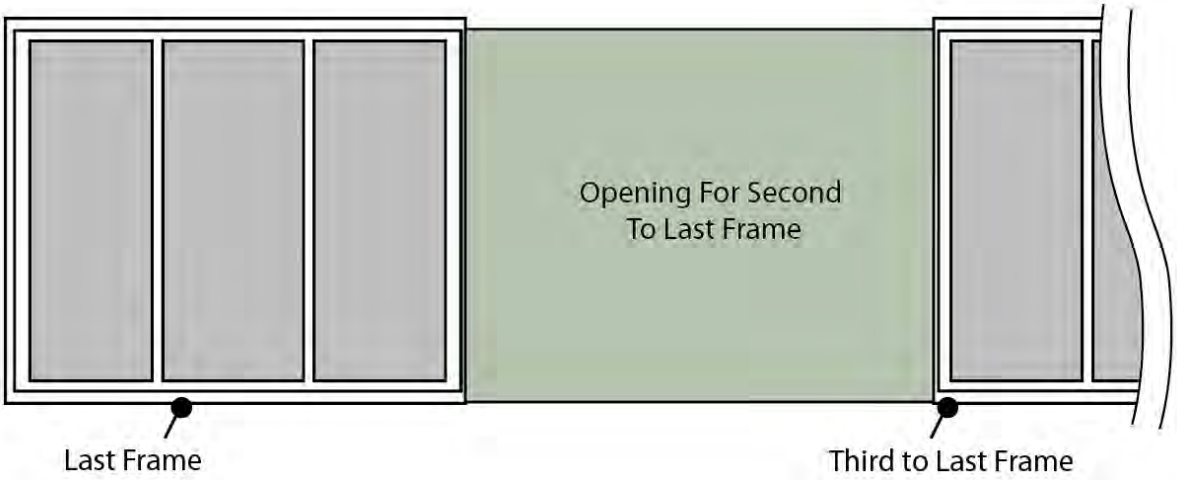

8. After installing the second to last frame Insert a T-Trims on both ends of the second to the last frame and install according to instructions in Step 3. This will ensure the sealing of all installed frames. Refer to Figure 2.10

Figure 2.10: Second to Last Frame installation

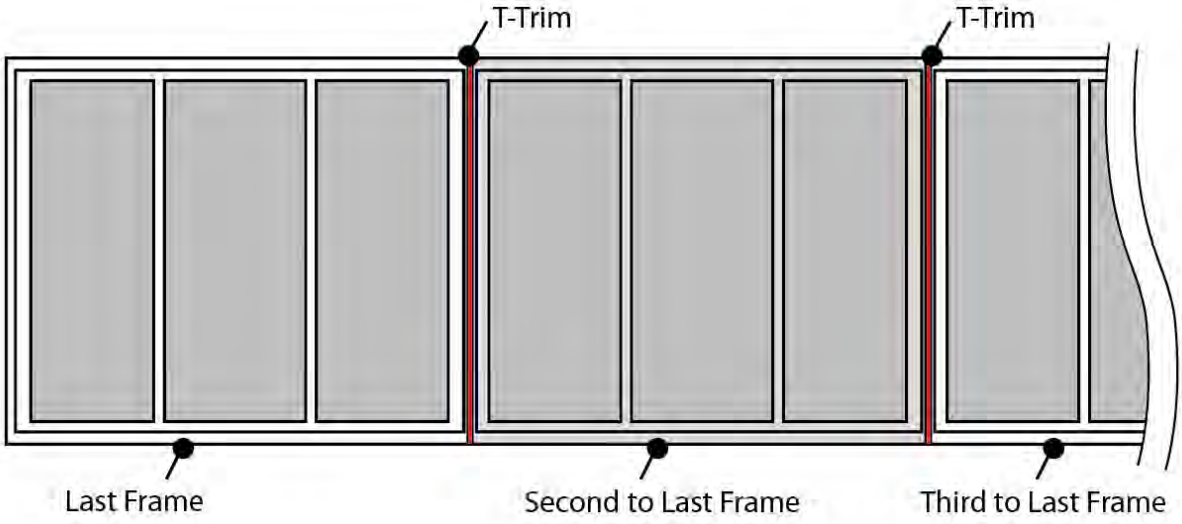

9. Once all frames and T-Trims have been installed, seal the entire line-up from inside of the case, caulking all four sides of the frame, in between the frame and net opening, and in any gaps left on the back end of the frames caused using the T-Trim(s) that were installed.

Frame Electrical Wiring Connections

The electrical connection at the Junction Box where the wires enter the frame, and where the wires enter the raceway in the frame must be sealed with silicone caulking at the time of installation.

WARNING	
STOP	***Stop:*** *Wiring for lights should have a separate circuit from the door/frame heater wiring circuit.*

WARNING	
	Warning – *To reduce the risk of fire, electrical shock or injury observe the following:* - *Use this unit in the manner intended by the manufacturer.* - *Turn the power off before removing the existing lighting system and follow appropriate lockout/tag-out safety procedures*

WARNING	
	Risk of Electrical Shock– *Potential risk of Electrical Shock; pay close attention to instructions when performing this and any other associated tasks.*

Conduit Exit Location

For walk-in frames, the conduit exit for connection wires is typically located on the top right inside of the frame. Depending on your needs when ordering you can designate where you would prefer the conduit exit to be located. Frame Junction box location is determined by customers.

Figure 2.11: Conduit Exit location

Figure 2.12: Wiring Labels

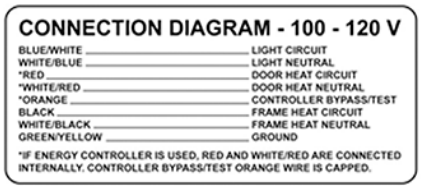

CONNECTION DIAGRAM - 100 - 120 V

BLUE/WHITE	LIGHT CIRCUIT
WHITE/BLUE	LIGHT NEUTRAL
*RED	DOOR HEAT CIRCUIT
*WHITE/RED	DOOR HEAT NEUTRAL
*ORANGE	CONTROLLER BYPASS/TEST
BLACK	FRAME HEAT CIRCUIT
WHITE/BLACK	FRAME HEAT NEUTRAL
GREEN/YELLOW	GROUND

*IF ENERGY CONTROLLER IS USED, RED AND WHITE/RED ARE CONNECTED INTERNALLY. CONTROLLER BYPASS/TEST ORANGE WIRE IS CAPPED.

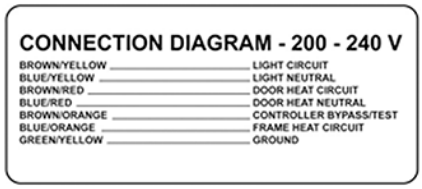

CONNECTION DIAGRAM - 200 - 240 V

BROWN/YELLOW	LIGHT CIRCUIT
BLUE/YELLOW	LIGHT NEUTRAL
BROWN/RED	DOOR HEAT CIRCUIT
BLUE/RED	DOOR HEAT NEUTRAL
BROWN/ORANGE	CONTROLLER BYPASS/TEST
BLUE/ORANGE	FRAME HEAT CIRCUIT
GREEN/YELLOW	GROUND

The seven individual wires extending from the flexible conduit atop the frame, provide electrical power to various frame and door functions for the wiring diagram label, affixed to the frame header.

Using wire connectors, these wires should be grouped by the Hotwires (Circuit wires), the Neutral wires, and the ground wire for connection to either the facility or the case power.

- Blue/White wire connects to the supplied Hot (or Lights Circuit Wire).
- White/Blue wire connects to the supplied Light neutral wire.
- Red and Black wires connect to the supplied Hot (or Door/Frame Heater Circuit Wire).
- White/Red and White/Black wires connect to the supplied neutral wire for the Door/Frame Circuit.
- Green/Yellow wire connects to the supplied ground wire.

Figure 2.13: Wiring Diagrams

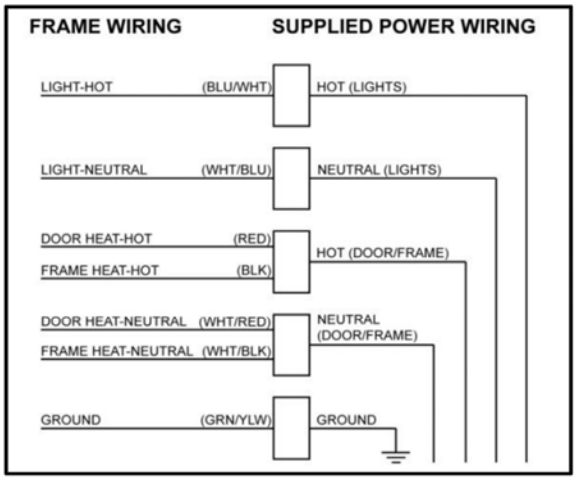

NOTICE	
	Note – Wiring for lights should have a separate circuit from the door/frame heater wiring circuit.

Section 3 – Door Unpacking Instructions

There are several precautions that you must be aware of when staging and unpacking the doors from the crate. The following section will address these precautions.

As always, please read this manual in its entirety. It should answer most of your installation questions. For personal and system safety, and optimum product performance, make sure you thoroughly understand the contents before unpacking, installing, using, or maintaining this product.

PROTECTIVE GEAR NOTICE	
	Protective Eyewear– Potential risk of eye injuries, protective eyewear required when performing this, and any other associated tasks.
	Protective Gloves– Potential risk of injury to your hands, protective gloves required when performing this, and any other associated tasks.
	Footwear Protective – Potential risk of injury to your feet, wearing protective footwear is required when performing this and any other associated tasks.

WARNING	
	Protective Gloves– Potential risk of injury to your hands, protective gloves required when performing this, and any other associated tasks.

WARNING	
	Warning: When removing doors from crates* DO NOT *lift or remove the door from handles. Doing so will cause the handles to break off the glass or possibly shatter the entire door! Please use extreme caution and have at minimum two people lift the door one person from each end to ensure proper removal from the crate.

Figure 3.1. Shipping Crate containing Anthony Doors

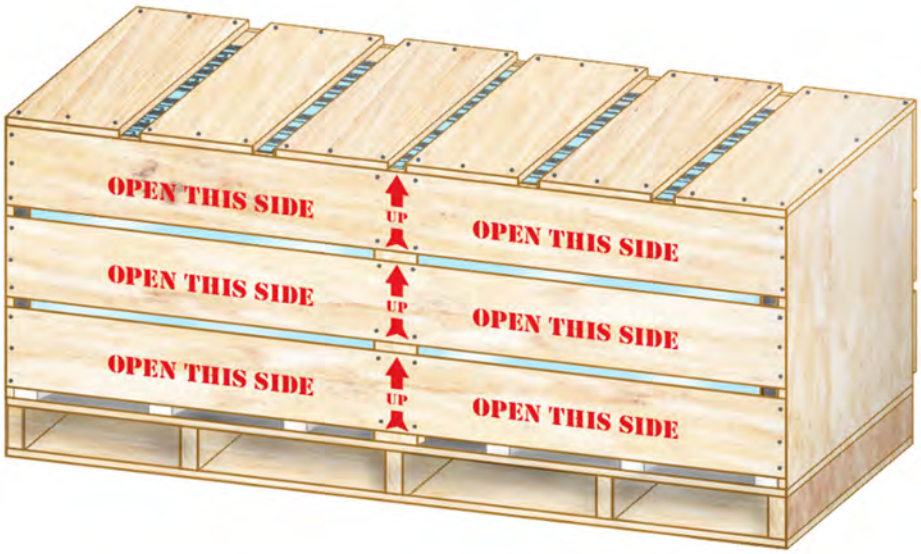

Opening Shipping Crate

Anthony takes great care to ensure that your doors arrive undamaged and in acceptable condition shape. Please use and follow these steps to ensure the proper removal of your doors from the shipping crate.

1. When staging for installation, ensure the crate(s) are in an area that is clear of obstructions and has enough clearance to be safely removed from the crate such as furniture, fixtures, toolboxes, etc.

2. Start by using a screwdriver or drill with a Philips screw bit to remove the screws holding the top wooden slats onto the crate (see Figure 3.2. below).

EX.2015 / IPR2025-00559 / Page 27 of 85
Anthony Inc. v. ControlTec, LLC

Figure 3.2. Unscrewing the top portion of the Shipping Crate

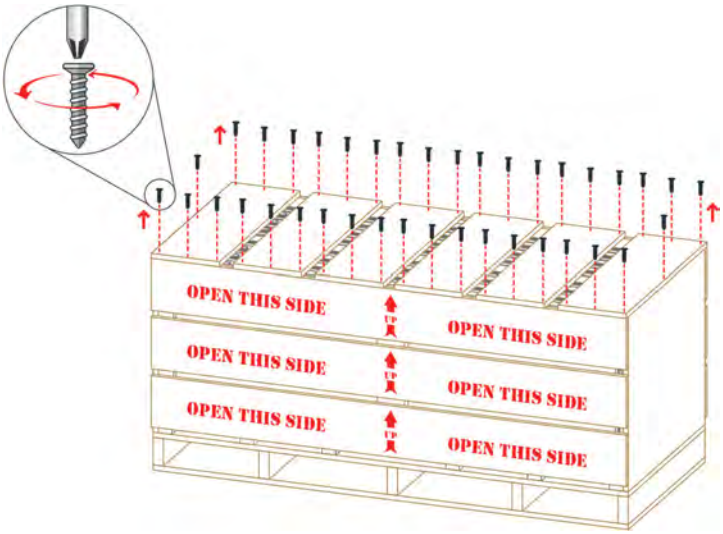

3. After removing all screws securing the top wooden slats to the crate, remove the wooden slats (see Figure 3.3. next page).

EX.2015 / IPR2025-00559 / Page 28 of 85
Anthony Inc. v. ControlTec, LLC

Figure 3.3. Removing the top portion of the Shipping Crate

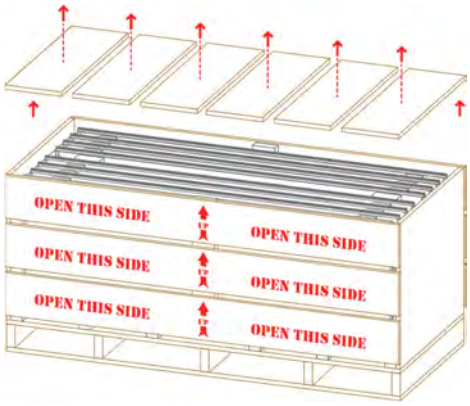

WARNING	
STOP	*Warning: If you only have one or two people to remove doors from the crate, please see Step # 4; if 3 or more people are available proceed to Step # 5.*

4. After removing the top wooden slats from the crate, use the same wooden slats or another piece of wood to place under the crate to offset the weight as shown in Figure 3.4. below. Simply use a hand jack or forklift to lift the front side with "Open This Side" marking enough to wedge in a few pieces of wood causing the weight of the crate to shift and insuring when doors are removed the rest will not fall over.

Figure 3.4. Offsetting crate weight for removing doors from the crate

5. The next step is to remove the front panel. To do this, unfasten the screws located along with the front side panel (See Figure 3.5. next page). The crate has been labeled with "Open this Side" to ensure you do not open the incorrect side.

Figure 3.5. Removing Front side of Shipping Crate

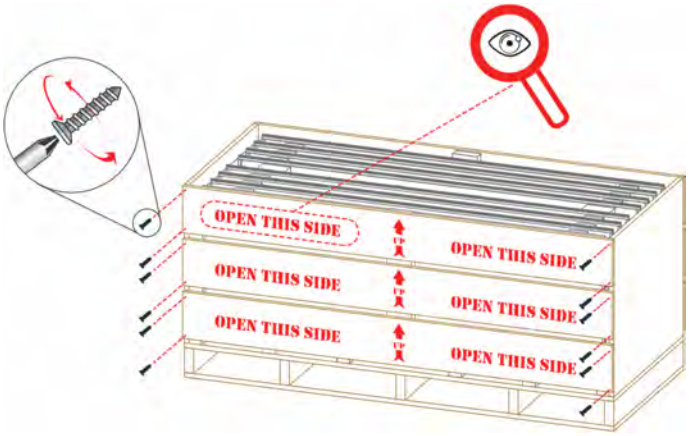

WARNING	
STOP	*Warning: When removing the front side of the crate ensure that you are opening side the that is labeled "Open This Side". Do not remove any additional crate panels, the doors have specifically been packed to be removed from the side indicated on the crate.*

Removing Doors from Shipping Crate

PROTECTIVE GEAR NOTICE	
	Protective Eyewear– Potential risk of eye injuries, protective eyewear required when performing this, and any other associated tasks.
	Protective Gloves– Potential risk of injury to your hands, protective gloves required when performing this, and any other associated tasks.
	Footwear Protective – Potential risk of injury to your feet, wearing protective footwear is required when performing this and any other associated tasks.

Please use and follow these instructions to ensure the proper removal of your doors from the shipping crate.

1. When removing the doors from the crate do not use door handles to lift or move the doors.
2. Have one person at each end firmly hold the door and lift it upwards to clear protective inserts at the bottom of the crate.
3. While the Door is suspended in the air and clear of any obstructions, carefully move away from the crate.
4. If possible, have a third person holding doors in the crate to ensure the remaining doors do not fall over and possibly be damaged. If a third person is not available, please see Step #4 in the previous section "*Opening Shipping Crate*" to insure safely removing doors with less than 3 people.

WARNING	
	Warning: When removing doors from crates DO NOT lift or remove the door from handles. Doing so will cause the handles to break off the glass or possibly shatter the entire door! If the weight of the crate is not offset as instructed in step#4, make sure to have a third person holding the doors while they are being removed.

Figure 3.6. Removing Door from Shipping Crate Correctly

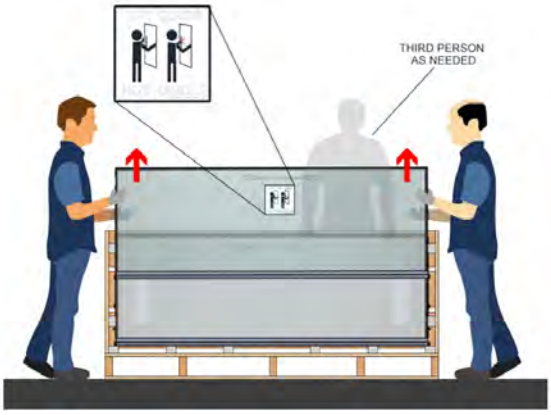

5. Continue to Safely remove all doors from the crate as needed. See Section 4 Door Installation on the next page for instructions on how to install the door onto the frame properly.

Section 4 – Door Installation

This section provides the information needed to safely perform the proper installation of Anthony doors onto the frame.

Door Handling

Once staging is complete and you have removed the first door and made all the Pre-Installation enhancements it is time to begin installing the Anthony Doors one at a time. Moving an Anthony door throughout the store will be difficult due to the weight and size. You must use two (2) technicians, at minimum, to always lift and carry doors.

PROTECTIVE GEAR NOTICE	
	Protective Eyewear– Potential risk of eye injuries, protective eyewear required when performing this, and any other associated tasks.
	Protective Gloves– Potential risk of injury to your hands, protective gloves required when performing this, and any other associated tasks.
	Footwear Protective – Potential risk of injury to your feet, wearing protective footwear is required when performing this and any other associated tasks.

Door Installation

The following instructions will guide you through the installation process, please read all instructions in full and understand them **entirely** before you begin.

Once the current frame has been installed, you can now proceed to install the new doors. Refer to *"Equipment List & Tools"* in Section 1 for a complete list of all equipment, tools, materials, and other things needed for installation.

1. Carefully lift the door with the handle facing forward, begin to adjust, pivot, and align the torque rod end so it aligns to the Torque Master on the base of the frame, while lifting safely insert the torque rod into Torque Master without damaging the door or frame as shown in Figure 4.1.

2. You should feel the door drop into place when swinging the door, make sure the Torque rod is fully engaged within the Torque Master before proceeding, failure to do so may result in injury and damage to the Anthony Door.

EX.2015 / IPR2025-00559 / Page 32 of 85
Anthony Inc. v. ControlTec, LLC

Figure 4.1: Seating Door onto Torque Master

3. Now we will proceed to engage and lock the hinge pin into place and prepare the SOCKET (hinge pin plug) receptacle by using Dielectric grease on the socket of the frame before inserting the door hinge pin.

4. Ensure to apply 3 grams of a high viscosity dielectric grease to the Hinge Pin receptacle in most applications. For installations where doors are in Harsh and/or Extreme ambient conditions with excessive moisture, it is recommended to fill the holes in the Hinge Pin receptacle socket as shown below in Figure 4.2. with 3 grams of the following:
   - Anthony P/N: **98-25497-0001** (approximately 100 grams, sufficient for up to 30 door receptacles).
   - Anthony P/N: **98-25497-0002** (approximately 3-gram packet, sufficient for up to 1 door receptacle).

Figure 4.2: Dielectric Grease in SOCKET (hinge pin plug) receptacle

5. Engage door with hinge pin inserted into SOCKET (hinge pin plug) receptacle at top of the frame. Push the door into the frame until the hinge pin snaps in place. See Figure 4.3.

Figure 4.3: Engage Hinge Pin to Frame

WARNING	
STOP	***Never use anything like a hammer, rubber mallet, or another tool to strike the Hinge pin into the Gib receptacle. Doing this will cause damage to the pin receptacles in the GIB and cause a short. You must only push this into place gently when completely aligned and ensure it is locked into position when done. You will feel it and hear a click when it is engaged properly.***

6. Insert the hold-open bolt through the elongated hold-open slot.
7. Insert the hold open through stand-off and secure it with a #2 Phillips screw (provided).
8. Keep the screwdriver perpendicular to the screw head. Make sure the tip is fully seated into the screw head recess before turning.

Figure 4.4: Secure hold-open mounting screw

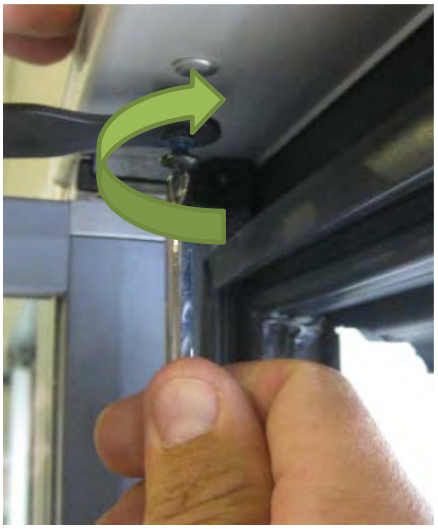

WARNING	
STOP	***WARNING: DO NOT use power tools to install and secure the hold-open screw.***

9. Now you will need to set the door tension swing and correct the door alignment by adjusting the Torque Master™ Refer to "Torque Master™ and Sag Adjustment" for details on proper adjusting.

Torque Master™ and Sag Adjustment

The TorqueMaster regulates the door alignment and the door closing tension. For the door to operate properly it must be square in the frame and the pivot centerline must be perpendicular to the level. If the frame was correctly installed, the top and bottom gaps between the door and frame will be even from the pivot side to the handle side of the door. If the gaps are not even, adjust the end screw on the Torque Master as required to make it even. For frames that are not square and level, the sag adjustment should be made with a level on the top or handle edge of the door (with it nearly closed). Once the door sag is correct, proceed to the torque adjustment.

WARNING	
STOP	***Warning:*** *Exercise caution when handling the door and DO NOT use power tools when adjusting theTorque Master™.*

Figure 4.5: Torque Master ™

Sag Adjustment

1. Adjust the door sag to square it in the frame by turning the screw that is marked SAG ADJ. (sag adjustment), on the end of the Torque Master, until the door is square in the opening.

    a. Turn counterclockwise to raise the handle side of the door.
    b. Turn clockwise to lower the handle side of the door.

EX.2015 / IPR2025-00559 / Page 37 of 85
Anthony Inc. v. ControlTec, LLC

Torque Adjustment:

1. Use a flathead screwdriver to adjust the torque rod tension, by turning the outside screw on the TorqueMaster.

WARNING	
STOP	***Warning:*** *Exercise caution when handling the door and DO NOT use power tools when adjusting theTorque Master™.*

2. Remove tension on torque rod closing force by rotating front TorqueMaster screw CW until door closing tension is relieved such that the door remains open 1 inch to 3 inches from gasket touching the contact plate.
3. Slowly increase the closing torque by rotating the front screw CCW until the door just closes (i.e., the magnetic gasket attracts the contact plate).
4. Continue to rotate the front screw two (2) additional CCW turns after the door closes.
5. The adjustment is completed. To test the adjustment, verify that the door closes from any opening distance, and the door remains open when the Hold open detent is engaged.

Clean up Work Area

After installation is completed, ensure to dispose of any installation-related debris and trash. Remove any crates remaining in the shopping area and/or any barriers set up.

Check door for Functionality

Refer to ***"Section 5 - Required Functionality for Complete Install"***

EX.2015 / IPR2025-00559 / Page 39 of 85
Anthony Inc. v. ControlTec, LLC

Section 5 - Required Functionality for Complete Install

The following items must be functional for the installation to be completed and closed out:

Door Frame Assembly

Door/frame assembly should be in proper alignment and level/plumb.

Gasket

The gasket must be properly sealed and touch the door around the entire frame assembly. The gasket must not be torn or loose. After handling the door and frame during installation, the frame gaskets may be pulled out of the framer rail dart, to ensure optimal sealing between the door and frame gasket you must check that gaskets are properly seated in the frame.

Hinge Pin

Three (3) grams of a high viscosity dielectric grease must be applied to the Hinge Pin receptacle at the time of installation. For installations where doors are in Harsh and/or Extreme ambient conditions with excessive moisture, it is recommended to use a minimum of 3 grams of Anthony P/N: 98-25497-0001 dielectric grease to fill the holes in the Hinge Pin receptacle socket. This will prevent corrosion and other issues excessive moisture can cause.

Hold Open Assembly

Hold open bolt must be in good working order, not broken, bent, or stripped. Hold open bracket must be functional and properly hold the door in the open position when open completely and engaged.

Torque Master Assembly

Torque Master assembly must be properly adjusted and functioning to close the door when it is held partially open (6 Inch test) When the installer lets go of the handle, the door should close completely without any pressure from the installer.

EX.2015 / IPR2025-00559 / Page 40 of 85
Anthony Inc. v. ControlTec, LLC

Section 6 - Cooler* Store Condition Requirements

The installation of Anthony doors in various applications requires specific store conditions to achieve optimal performance. Please note that ambient conditions in your store may vary throughout the day. Anthony/ Anthony Doors are built to ANSI/ASHRAE Standard 72-2014 Test Standard.

**Cooler refers to either a walk-in cooler; or an NT refrigerated display case.*

Table 6.1: Operating conditions

NORMAL TEMP	
Models	**Operating Conditions**
I60N	75°F, 70% RH AMBIENT / 35°F WALK-IN

WARNING	
STOP	***Stop – Cooler and store operating conditions that exceed the required limits may cause condensation and result in sweating of doors. Facility operators should monitor the cooler and store operating conditions regularly to ensure the required conditions are met.***

Operating Requirements and Recommendations for Optimal Performance

- Recommend HVAC vents do not blow directly on doors.
- Use of high viscosity dielectric grease is recommended for Hinge Pin Receptacle; for Harsh environments the use of dielectric grease Anthony P/N: 98-25497-0001 is strongly recommended to ensure optimal performance and protect electric connections.
- Cooler temperature settings must not operate below the recommended temperatures: Refer to Table 6.1 Operating conditions above.
- Evaporators must be equipped with defrost termination control to end the termination early if the coil is cleared. Recommend scheduling defrost during low traffic periods. Adjust the duration of evaporator defrosts according to the manufacturer's recommendations.
- The Cooler must be regularly inspected for air leaks. Identified air leaks must be sealed. Visually inspect box penetrations and adjoining surfaces: the use of a flashlight is helpful. A smoke stick can be used to validate an infiltration while the cooler is operating.
- Avoid direct evaporator air impingement on the cooler door. This can be achieved by ensuring shelves are always fully stocked.
- It is strongly recommended that air deflectors be installed in every evaporator inside the walk-in cooler. Refer to Figures 6.1 and 6.2.

EX.2015 / IPR2025-00559 / Page 41 of 85
Anthony Inc. v. ControlTec, LLC

Figure 6.1 Product Stocking – Shelves required to be fully stocked

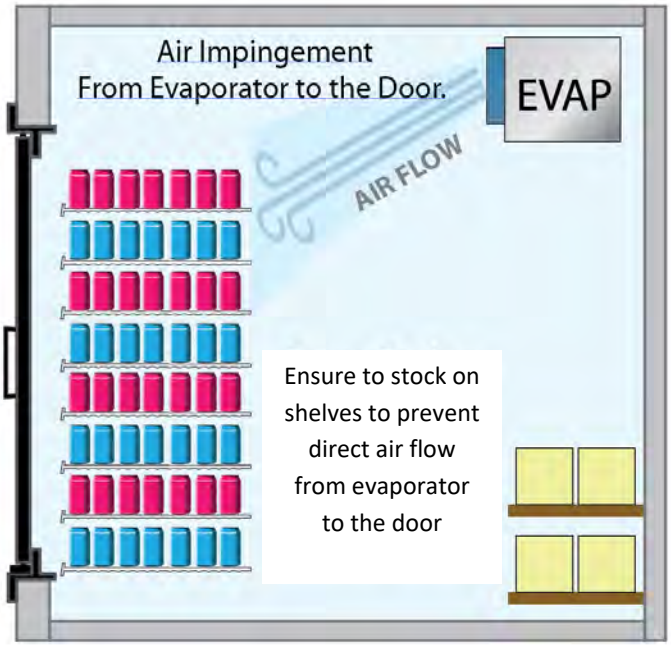

Figure 6.2 Evaporator Air Deflector - Contact evaporator manufacturer for recommended air deflector.

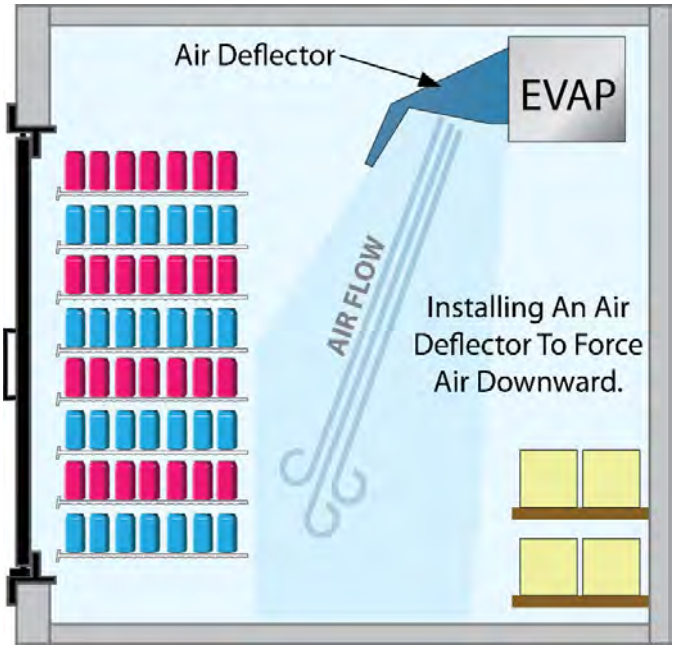

Section 7 - Routine Preventative Maintenance

The following provides information needed to safely perform regular periodical preventive maintenance. Regular preventative inspections will maximize the longevity of your Anthony products. These simple tasks will go a long way in ensuring optimal performance. Depending on maintenance being performed you may need to shut down the door or kill all power to the doors. Refer to your specific door model Installation Manual on how to disengage power. The use frequency of doors will vary from location to location, and the frequency in routine for preventative maintenance will vary for everyone depending on the amount of traffic.

For Anthony products used in harsh or extreme ambient conditions, it is recommended that these inspection intervals be performed on a more regular basis. When issues are found please refer to your specific model's installation and service manual for detailed information on how to replace and re-order needed parts or contact your Anthony representative.

PROTECTIVE GEAR NOTICE	
	Protective Eyewear– Potential risk of eye injuries, protective eyewear required when performing this, and any other associated tasks.
	Protective Gloves– Potential risk of injury to your hands, protective gloves required when performing this, and any other associated tasks.
	Footwear Protective – Potential risk of injury to your feet, wearing protective footwear is required when performing this and any other associated tasks.

Recommended Maintenance Inspection and Cleaning Intervals

Action	Store Conditions	Description
Preventative Inspection	Normal Conditions	Once each quarter (every 3 months)
	Harsh Conditions	Once a month (every 30 days)
Cleaning	All Conditions	Once a month (every 30 days)
Note: These are recommendations based on historical data of other Anthony door products and can vary depending on location, store conditions, store traffic, and other unknown variables.		

Maintenance Recommendations

Here is an outline of standard recommend inspection interval recommendations:

- **Cooler Temp & Defrost Settings** – Regularly inspect and ensure that ambient conditions are correct, refer to the values that pertain to your specific Door Model for Operating Condition values that are required for optimal door performance, and to maximize door and frame longevity**.**

- **Frame & Door** – Regularly ensure to check for wear/tear on frame and door this can include:
  - Ensuring that warning labels and product identification labels are all intact
  - Ensure all Bezels are intact and not damaged
  - Ensure that Vents are clean and allow maximum Airflow
  - Ensure all plastic backs are secured and undamaged
  - Handles are secured to the door
  - Ensure the door is opening to the angle of 87°
  - Rails are intact, not broken, and securely in place

- **Door/Frame Hinging Pin & Receptacle Area** – Regularly ensure to check for wear/tear all hinging parts include:
  - Inspect that the Hinge Pin is properly connected with the frame receptacle, **DO NOT** remove the factory installed dielectric grease from the Hinge Pin assembly to ensure the proper function
  - Inspect that the Hinge Pin and receptacle are rust/corrosion free, and there is an adequate amount of Dielectric Grease present
  - If when replacing or servicing Door and it is removed from the Hinge Pin receptacle, ensure to re-apply dielectric grease before installation of the door
  - Anthony recommends applying a minimum of three (3) grams per door Hinge Pin receptacle of its High-performance Dielectric Grease:
    - Anthony P/N: **98-25497-0001** (approximately 100 grams, sufficient for up to 30 door receptacles).
    - Anthony P/N: **98-25497-0002** (approximately 3 gram packet, sufficient for up to 1 door receptacle).
  - Replace any broken or damaged Hinge Pin and ensure to apply an adequate amount of Dielectric Grease
  - Visually and mechanically Inspect Hold-Open Arm, Screw, and Spacer for wear/tear/damage and that Screw it is secure

- **TorqueMaster™** – To check the TorqueMaster™ is functioning correctly open each door and ensure that the tension makes the door close smoothly and gently on its own. If the door closes either too slowly or rapidly the issue can be fixed by adjusting that Torque Master™ refer to the "Torque Master™ and Sag Adjustment" section for details. If after adjusting the issue is still present the next step is to replace the Torque Master™, refer to this manual for detailed instructions on replacing.

- **Gaskets** – When inspecting gaskets ensure that they are sealing properly along the entire perimeter of the Frame. Also, ensure that the gasket is properly inserted into the frame grove, pay special attention to the corners ensure that when door closes the corners do not bind. Inspect and ensure gaskets are free of cracks, tears, deformities, and hardening.

Cleaning Routine

List of Items that should be cleaned during the monthly cleaning routine:

- **General Cleaning** – Regularly clean by wiping down the frame, door rails, bezels, and gaskets by checking for food debris, dust, and other foreign objects that may prevent the door from closing correctly. Use non-abrasive cleaning apparatus (i.e., microfiber cloth) when wiping down frame and door rails.

- **Cleaning Inside Door Glass*:** To clean door glass on the inside of the door. We recommend the following cleaners:
    - Windex® Original
    - Windex® Vinegar
    - Fantastik®
    - Formula 409®
    - MicroClean Professional APC®

NOTICE	
	Note – any cleaner used or listed here MUST be Ammonia Free. Only use cleaners on the glass portion of the door. Using harsh chemicals on PVC or ABS plastic portions of the door may damage the material.

Fantastik® and Windex® are registered trademarks of S.C. Johnson & Son, Inc. | Formula 409® are registered trademarks of The Clorox Company. |MicroClean Professional APC® (formerly Now® all-purpose cleaner) is a registered trademark of The Mirachem Corporation.

EX.2015 / IPR2025-00559 / Page 45 of 85
Anthony Inc. v. ControlTec, LLC

Section 8 - Troubleshooting

Table 8.1: Installation Troubleshooting

PROBLEM / ISSUE	PROBABLE CAUSES / FIXES	FINAL REMEDY
Condensation on Door Glass, Door Rail, or Frame	Fan to Door Proximity too small	Install air deflector
	Evaporator fans blowing cold air directly onto glass/frames	
	Shelves not fully stocked	Stock merchandise
	Door/gasket seal malfunction	See "Insulation or Air Leaks"
	Store conditions (temperature and relative humidity) outside required parameters	Adjust HVAC / Dehumidifier settings to meet required
	Cooler/freezer temperature set too low	Adjust cooler/freezer temperature to design specified setting
	Check Store conditions	Confirm the room temperature in Normal temp is 75° F and the humidity is below 65%RH and the walk-in case is in the range of 35° F, on Low temp the temperature must be 75° F and the humidity is below 65%RH and the walk-in case is in the range of -10° F
Condensation in between Glass Panes	Seal compromised cause loss of gas or vacuum (check by cleaning the glass on merchandise and customer sides)	Replace door
Rust/Corrosion on Hinge Pin	Excessive moisture from ambient/store conditions	Add Dielectric Grease to Hinge Pin Receptacle Replace the Hinge Pin/ add an adequate amount of Dielectric Grease
Ice buildup inside Freezer	Air infiltration Box/frame not sealed according to Anthony's instructions	See "Insulation or Air Leaks"
Door not closing or sealing	Check gasket to ensure proper installation on the frame	Replace frame gasket
	Check the gasket for damage	
	Check Hold-Open	Replace Hold-Open
	Check TorqueMaster torque (plumb)	Replace TorqueMaster2
	Check TorqueMaster sag	
	Check Frame/Door is square	
	Check Plastic covers on rails	Replace Plastic Covers
	Check Plastic covers on frame mullions	
No Power to Frame	Check Power Supply	Adjust energy controller to Full-On Replace Power Supply Replace Energy/Humidity Controller Replace Hinge Pin Replace wiring
	Check energy/humidity controller	
	Check hinge pin connections	
	Check glass wire connections	
	Check hinge pin wiring	
	Check Power connections	
Low Voltage	Check main voltage	Adjust energy controller to Full-On Replace Frame heater wires
	Check humidity controller	
	Check the Amp draws to the heater wires in the frame	
Door/Gasket Seal - Malfunction	Check Frame gasket	Replace Frame gasket Replace hinge pin Replace TorqueMaster
	Check door mount	
	Check Door is square and level	
Frame not Square or Plumb	Frame not properly shimmed	Use correct Shim to level frame Use a rubber mallet to adjust the frame plumb within 1/16"
	The frame should be square to within 1/16"	
	The frame should be plumb within 1/16"	
Insulation or Air Leaks	Frame must be properly shimmed, level, and plumb	Seal gaps with approved NSF-approved Food Grade Silicone Sealant per Quick Installation Requirements Guide. Check Gaskets are sealing properly for all door openings
	Use RTV-108 NSF Approved Silicone Caulk to fill the perimeter of the frame on the refrigeration side (inside the case) and at all frame joints as required so there are no air gaps.	
	Use RTV-108 NSF Approved Silicone Caulk to fill the perimeter of the frame on the refrigeration side (outside the case) and at all frame joints as required so there are no air gaps.	
	Ensure Gap between frame and refrigeration does not exceed 1/8", gaps larger than 1/8" will require additional shimming to reduce gap size before sealing	
	Ensure all electrical conduits are properly sealed to prevent moisture and air from migrating into the box, use RTV-108 NSF Approved Silicone Caulking if necessary	

Table 8.2: General Troubleshooting

PROBLEM / ISSUE	PROBABLE CAUSES / FIXES	FINAL REMEDY
Glass condensation	No Power	Check power supply Check humidity controller Check Hinge Pin connections Check glass wire connections Check Hinge Pin wiring
	Low voltage	Check main voltage Check humidity controller
Door/Frame Rail Condensation	No Power	Check power supply Check humidity controller Check hinge pin connections Check door wire connections Check frame wire connections
	Low voltage	Check main voltage Check humidity controller hinge pin
	Door seal malfunction	Check gasket Check door mount wiring
Door not closing or sealing	Gasket malfunction	Check gasket installation Check the gasket for damage Replace gasket
	Door not closing properly	Check hold-open Check TorqueMaster torque Check TorqueMaster mount Adjust TorqueMaster sag Check frame/door square Check plastic covers on rails
Door saw-toothed	Door or frame not square	Square door to 1/16” Adjust TorqueMaster sag Replace worn hinge pin socket Facility or case not level Frame not properly shimmed Hold-open binding/damaged
LED Fixture inoperative	Power switch OFF	Turn the power switch ON
	LED burned-out	Replace LED Fixture
	LED failure	Check socket mounting Check socket/lamp connection Check ground wire connection Replace LED Fixture
	Incorrect LED fixture	Replace with the correct LED fixture
	LED Driver failure	Check wire connections Replace LED Driver
	Incorrect wiring	Check ground wire connection Reconfigure wiring Replace wiring
LED intermittent or dimming	Defective wiring	Check & replace wiring
	Defective LED Fixture	Replace LED Fixture

Section 9 – Frame Replacement Parts

The following section list Frame Replacement parts for Normal Temperature Frames.

Figure 9.1 Frame Assembly for Infinity 60 Series Normal Temperature for Replacement Parts
(See Table 9.1 for Part Numbers)

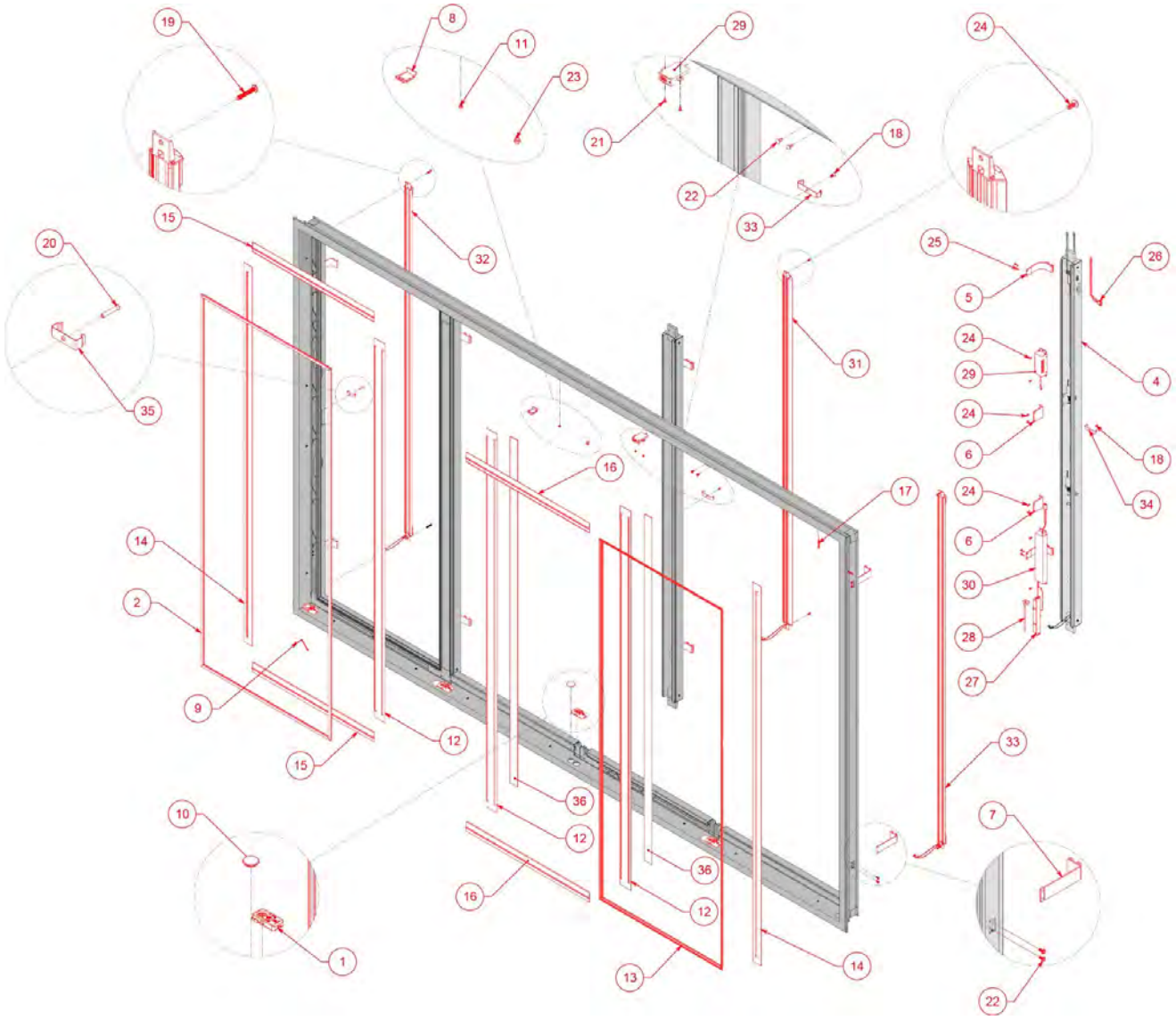

NOTICE	
	Note: Parts depicted in Red can be replaced, parts in Black are not replaceable

Table 9.1 Frame Assembly for Infinity 60 Series Normal Temperature for Replacement Parts List

ITEM NO.	PART NUMBER	DESCRIPTION
1	02-10568-000X	ASSEMBLY, TORQUE MASTER
2	20-17218-0000	ASSEMBLY, GASKET, 2-DR, VSTB/VSTC
5	11-10602-0001	BRACKET, POST, MULLION, CTR,101X
6	11-22496-5001	PLATE LATCH, 210Z
7	11-25088-000X	BRACKET, POST, END
8	20-11314-0001	PLUG, DUMMY, DR, REVERSIBLE
9	20-11935-000X	CLIP, SPRING
10	20-12754-0001	CAP, PLUG, TORQUE MASTER
11	20-15819-0001	PLUG, TRUSS
12	20-17114-1042	FAB, PLATE, SEALING, MUL, VSTA
13	20-24915-1023	EXT, RETAINER, FRAME & MULLION, 101N
14	20-25096-1042[1]	EXT, PLATE, VST, NG, JAMB
15	20-25096-20330[1]	EXT, PLATE, VST, NG, END-TO-MULLION
16	20-25096-20430[1]	EXT, PLATE, VST, NG, MULLION-TO-MULLION
17	40-10993-3014	SCREW, #8 X 1-3/4, PHD, SMS, TPAB, BLACK
18	40-10994-1005	SCREW, 8-32 X 1/2, PFH, TYPF, ZINC
19	40-11114-1011	SCREW, #8 SMS TYP B, PPH
20	40-12514-3010	SCREW, 6 X 7/8 SMS TYP B, PFH, BLACK, ZC
21	40-12665-3003	SCREW, 6-32 X 1/4, PPH, TPII, BLK ZC
22	40-13723-1006	SCREW, 10-24 X 7/16, TAP, 1/4", ZN
23	40-14616-0001	STANDOFF, PIVOT, HOLD OPEN
24	40-25072-1005	SCREW, 8-32X1/2, PFH, ZNC
25	40-25128-1008	SCREW,10-16X5/8, HI-LO ZNC
26	60-12486-0001	ASSEMBLY, SWITCH, RKR,101A/101X, 120
27	60-16138-0002	POWER PACK, 120/127VAC
28	60-16477-0004	CABLE W/RJ45 MALE CONN,3'90END
29	60-22715-0002	CONTROLLER, ENERGY
30	60-19910-0004	DRIVER, FULHAM, 24V
31	60-24826-7XXXX[1]	ASSEMBLY, LED, CENTER, OP7
32	60-24827-7XXXX[1]	ASSEMBLY, LED, END, LEFT
33	60-24828-7XXXX[1]	ASSEMBLY, LED, END, RIGHT
34	60-24885-0003	CLIP, MOUNT, CENTER, OP7 FIXTURE
35	60-24886-0001	CLIP, MOUNT, END, OP7 FIXTURE
36	90-19294-F000[1]	PANEL, FOAM, 1 5/8 X.55

*Items 3 and 4 are not listed as they are not replaceable parts.

[1] Part Numbers are based on length.

Section 10 – Door Replacement Parts

The following section list Door Replacement parts for Normal Temperature Infinity 60 Doors.

Figure 10.1 Door Assembly for Infinity 60 Series Door, for Replacement Parts

(See Table 10.1 for part numbers)

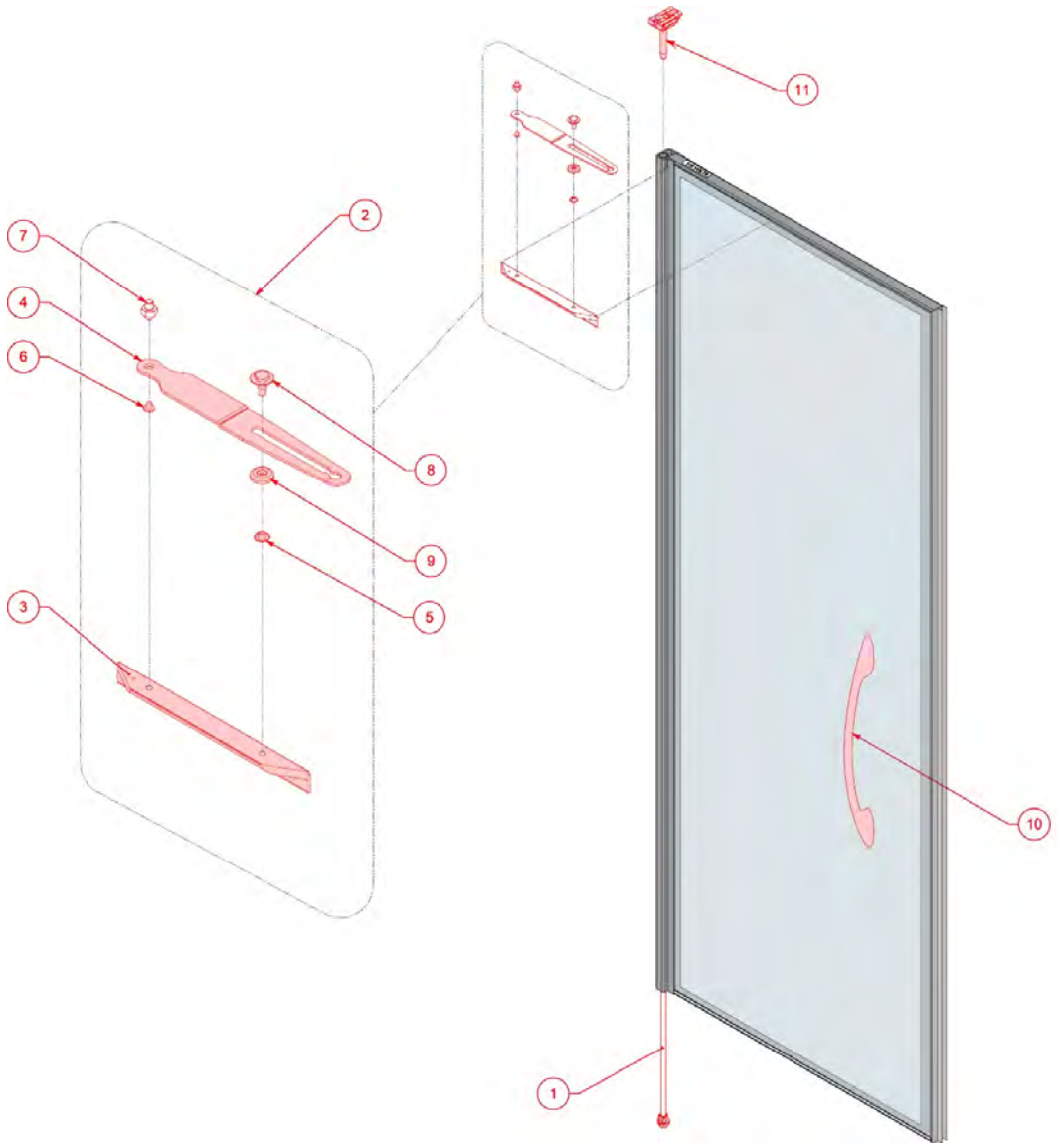

NOTICE
Note: *Parts depicted in Red can be replaced, parts in Black are not replaceable.* ** Exploded assembly for configurations with Vista Arch Handle. For configurations that have a full-length handle, all listed parts are the same apart from the Vista Arch Handle Item #10.*

Table 10.1 Door Assembly for Infinity 60 Series Replacement Parts List

ITEM NO.	PART NUMBER	DESCRIPTION
1	02-10308-000X[1]	ASSEMBLY, TORQUE ROD
2	02-14649-0000	ASSEMBLY, HOLD OPEN FORK, CLOSED END
3	11-21191-0000	BRACKET, HOLD OPEN, VSTD/VSTE
4	15-14707-0001	HOLD OPEN FORK, CLOSED END
5	20-15707-0002	CAP, VINYL, HOLD OPEN, RED
6	40-11248-0000	SCREW, PHILLIPS TRUSS HEAD
7	40-14616-0001	STANDOFF, PIVOT, HOLD OPEN
8	40-15096-0001	BOLT, DETENT, HOLD OPEN
9	40-15097-0001	SPACER, DETENT, HOLD OPEN
10	45-17239-0000[2]	HANDLE, ARC, DOOR, VISTA
11	60-10848-0002	ASSEMBLY, PLUG, HINGE PIN, DUMMY

[1] Part Numbers are based on length.

[2] Part Numbers are based on finish.

* Item 10 only applies to configurations with a Vista Arch Handle

EX.2015 / IPR2025-00559 / Page 51 of 85
Anthony Inc. v. ControlTec, LLC

Section 11 – Optimax 7 LED Lighting Fixture Replacement

All work performed must be done by a qualified personal only. All local and national electrical codes must be followed when replacing fixtures of the lighting system. Part numbers referenced in the following instructions can be purchased from the Anthony Parts Department if they are not available at your location.

WARNING	
	Warning – *Ensure to cut the power source to the frame to avoid the risk of electrical shock when replacing LED fixtures.*

WARNING	
	Warning – *To prevent wiring damage or abrasion, do not expose wiring to edges of sheet metal or other sharp objects.*

WARNING	
	Warning: *For use inside a commercial refrigeration case with packaged foods only.*

Replacement Part Numbers

Hardware for Center Fixtures		
Description	Part Number	Qty Required
Center mounting Clip	60-24885-0003	1
Mounting screw for Center Clip	40-10994-1005	1
Mounting screw for OP7 Center Led Fixture	40-25072-1005	2

Hardware for End Fixtures		
Description	Part Number	Qty Required
End mounting Clip	60-24886-0001	1
Mounting screw for End Clip	40-12514-3010	1
Mounting screw for OP7 End Led Fixture	40-11114-1011	2

Replacement Instructions

The following instruction set will guide you on how to properly replace an Optimax 7 LED fixture. These instructions can be used for both Center and End Fixtures.

WARNING	
	Warning *–Make sure to turn off the Light switch on the Frame Mullion (right most) before starting the replacement process.*

PROTECTIVE GEAR NOTICE	
	Protective Eyewear– Potential risk of eye injuries, protective eyewear required when performing this, and any other associated tasks.
	Protective Gloves– Potential risk of injury to your hands, protective gloves required when performing this, and any other associated tasks.
	Footwear Protective – Potential risk of injury to your feet, wearing protective footwear is required when performing this and any other associated tasks.

1. Remove the Zipper strips and contact plates on the Frame Mullion to reach the wiring of the existing light.

2. Disconnect the connector on the Led fixture cable from the frame wire Harness connector.

3. Using a Philips head screwdriver, remove the mounting screws from the top and bottom of the existing light.

WARNING	
STOP	***Warning: Do NOT use a power drill to remove or install the screws that secure the fixture onto the frame, doing so can damage the frame and strip the threaded hole.***

4. Gently remove the LED fixture cable from the wire egress of the mullion/Jamb.

5. Remove the Led Fixture by unsnapping the fixture from the Center mounting clip.

6. Take the new Replacement OP7 light and feed the Light cable through the wire egress.

7. Make a connection between the connector on the Light cable and the Wiring Harness inside the Frame Mullion/Jamb. Make sure the Grommet on the Light cable rests in the egress hole.

8. Align the Light fixture mounting bracket holes to the pre-existing mounting holes on the Mullion/Jamb and Snap the OP7 Light fixture into the Center mounting clip.

9. Using a Phillips Head screwdriver and the existing mounting screws install the new LED light. Use new screws from the hardware kit if needed.

10. Test the lights by turning on the light switch to make sure the connections are secure.

11. Place the contact plates back and secure them using the zipper strips. (Use new zipper strips if necessary).

12. Repeat the same process for the remaining Mullions and the end Jambs to replace the Lights.

EX.2015 / IPR2025-00559 / Page 54 of 85
Anthony Inc. v. ControlTec, LLC

End Jambs

For end jambs, it may be necessary to remove zipper strips and additionally remove the contact plate of the Frame Sill see images and note below.

NOTICE	
	Note: *For End Jambs, you may need to remove the contact plate of the Frame sill (bottom) to be able to remove the End Jamb contact plate.*

Section 12 – Removing & Replacing the Torque Rod

Please read the instructions in their entirety. It should answer most of your installation questions. For personal and system safety, and optimum product performance, make sure you thoroughly understand the contents before installing, using, or maintaining this product.

PROTECTIVE GEAR NOTICE	
	Protective Eyewear– Potential risk of eye injuries, protective eyewear required when performing this, and any other associated tasks.
	Protective Gloves– Potential risk of injury to your hands, protective gloves required when performing this, and any other associated tasks.
	Footwear Protective – Potential risk of injury to your feet, wearing protective footwear is required when performing this and any other associated tasks.

You must remove the door from the frame and place a steady flat surface to remove and replace the torque rod. Once the door is safely on a secure working surface use the following instructions to remove and replace the torque rod.

1. Carefully place a flathead screwdriver between the door rail and the washer beneath the torque rod. Refer to Figure 12.1.

Figure 12.1 Torque Rod location.

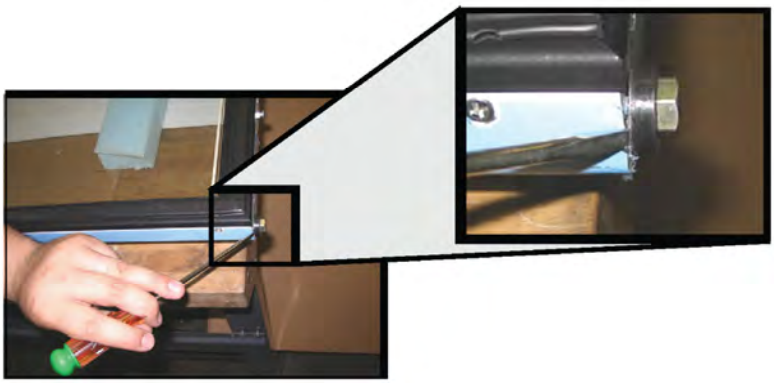

2. Dislodge the torque rod from its mount by pushing on the torque rod or tapping it loose using a plastic or rubber mallet. Refer to Figure 12.2.

Figure 12.2 Removing torque rod from the door.

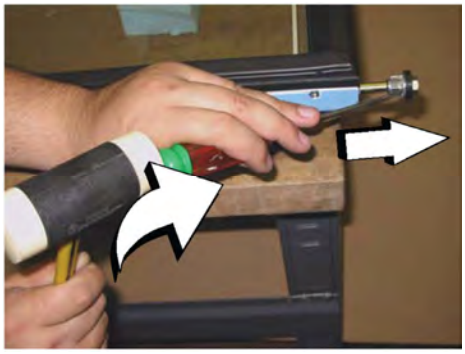

WARNING	
STOP	***Warning: DO NOT use a steel-headed hammer. Use caution when striking any tool with another tool. DO NOT use excessive force when striking the screwdriver and potentially damaging the door.***

3. Continue to carefully tap the torque rod, if necessary, until the torque rod and rod end disengages.
4. Carefully pull the torque rod assembly completely out the door rail.
5. Reverse the process to re-install the torque rod assembly into the door rail. Refer to Figure 12.3.
    - Insert torque rod into the bottom of the door until it is fully seated.
    - If required, tap the torque rod assembly into the door rail using a plastic or rubber mallet, until the torque rod is fully seated into the door rail socket.

Figure 12.3 Removing torque rod from the door.

6. Once this is completed, re-install the door per instructions in Section 4 – Door Installation.

WARNING	
STOP	***Warning: Ensure to apply a minimum of 3 grams of dielectric grease (Anthony P/N: 98-25497-0001) to fill the holes in the socket as shown in Figure 4.2 in "Section 4 – Door Installation".***

Section 13 – Removing & Replacing the Hold-Open Assembly

Please read the instructions in their entirety. It should answer most of your installation questions. For personal and system safety, and optimum product performance, make sure you thoroughly understand the contents before installing, using, or maintaining this product.

You must remove the door from the frame and place a steady flat surface to remove and replace the hold-open assembly. Once the door is safely on a secure working surface use the following instructions to remove and replace the hold-open assembly.

PROTECTIVE GEAR NOTICE	
	Protective Eyewear– Potential risk of eye injuries, protective eyewear required when performing this, and any other associated tasks.
	Protective Gloves– Potential risk of injury to your hands, protective gloves required when performing this, and any other associated tasks.
	Footwear Protective – Potential risk of injury to your feet, wearing protective footwear is required when performing this and any other associated tasks.

Removing the Hold-Open Assembly

1. Remove screws from the hold-open standoffs, which are located on the door rail and frame. Refer to Figure 13.1.
2. Remove the hold open, standoffs, and discard them.
3. When replacing the hold-open arm, reverse Step 1 by inserting the screw through the mounting hole in the arm and tightening it into the frame mounting hole using the #2 Philips head screwdriver. Refer to Figure 13.1.

Figure 13.1 Removing hold-open assembly from door.

NOTICE	
	Note: Parts depicted in Red can be replaced, parts in Black are not replaceable

Replacing the Hold-Open Assembly

1. Insert the pivot standoff into the door.
2. Add Loctite #271 to threads. Torque to 100 in/lb.
3. Place the pivot hole of the new hold open over the pivot standoff that is closest to the hinge pin.
4. Retain with a new truss head screw and torque to 16 in/lb. (approximately #2 clutch setting on a professional screw gun).
5. Remove the vinyl cap from the detent bolt.
6. Insert the bolt up thru the hold open slot and then thru the detent spacer (flat side against frame).
7. Add Loctite #271 to threads. Use a 7/16 hex wrench and torque into the frame to 100 in/lb.
8. Add a small amount of grease to the detent surface.
9. Ensure the truss head screw is seated on the end of the standoff and not the hold open.

Figure 13.2 Hold-open Assembly

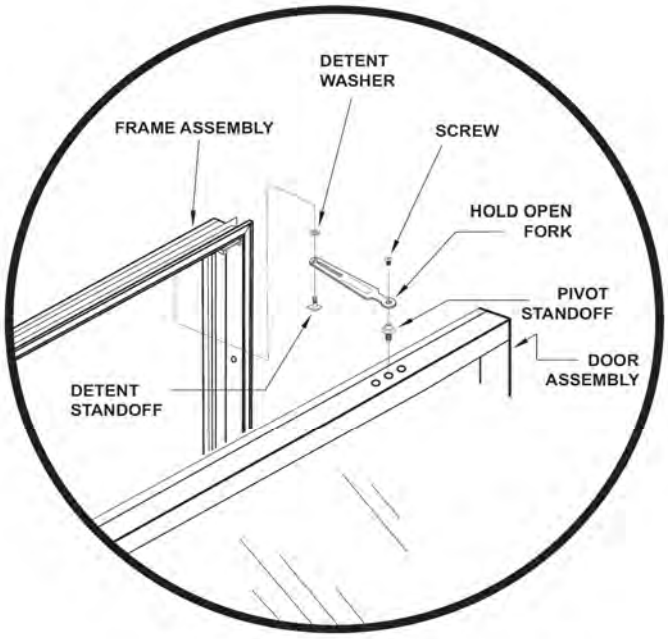

Section 14 – Removing & Replacing the Hinge Pin

The following instructions will guide you on how to remove and replace the Hinge Pin assembly from your door.

PROTECTIVE GEAR NOTICE	
	Protective Eyewear– Potential risk of eye injuries, protective eyewear required when performing this, and any other associated tasks.
	Protective Gloves– Potential risk of injury to your hands, protective gloves required when performing this, and any other associated tasks.
	Footwear Protective – Potential risk of injury to your feet, wearing protective footwear is required when performing this and any other associated tasks.

1. Using a flat-head screwdriver, pry the hinge pin loose from the mount in the top door frame rail.

2. Pull the hinge pin out of the door frame until the pin and the wires are completely removed.

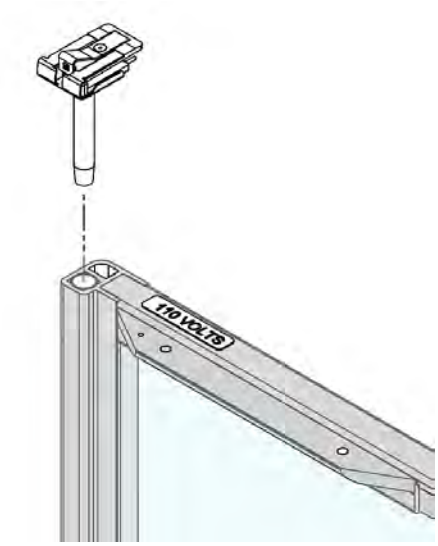

3. Insert the replacement hinge pin into the frame mounting hole until the hinge pin is fully seated.

4. Ensure to apply high viscosity dielectric grease to the Hinge Pin receptacle. For doors in Harsh ambient conditions, it is recommended to use a minimum of 3 grams of dielectric grease (Anthony P/N: 98-25497-0001) to fill the holes in the Hinge Pin receptacle socket as shown below.

5. Once dielectric grease is applied correctly, proceed to re-install the door per instructions in *"Section 4 -Door Installation".*

WARNING	
STOP	***Warning:*** *Ensure to apply a minimum of 3 grams of dielectric grease (Anthony P/N: 98-25497-0001) to fill the holes in the socket as shown in Figure 4.2 in "Section 4 – Door Installation".*

Section 15 - TorqueMaster Replacement

The following instructions will guide you on how to remove and replace TorqueMaster from the frame.

PROTECTIVE GEAR NOTICE	
	Protective Eyewear– Potential risk of eye injuries, protective eyewear required when performing this, and any other associated tasks.
	Protective Gloves– Potential risk of injury to your hands, protective gloves required when performing this, and any other associated tasks.
	Footwear Protective – Potential risk of injury to your feet, wearing protective footwear is required when performing this and any other associated tasks.

1. Once the first door is removed, proceed to remove, and replace TorqueMaster.
2. Insert a flat head screwdriver into the TorqueMaster and turn Counterclockwise to disengage and remove the old TorqueMaster as shown in Figure 15.1.
3. Next, place the new TorqueMaster into the opening in the frame, and using a flathead screwdriver turn Clockwise to lock Torque Master in place.

Figure 15.1: TorqueMaster Replacement

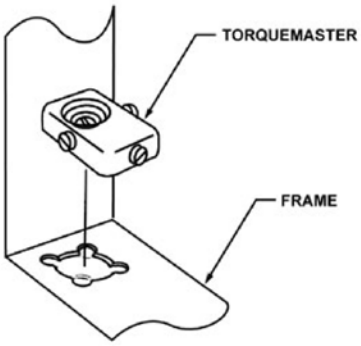

4. Ensure that TorqueMaster is secure before proceeding.
5. Re-install door per instructions in Section 4 -Door Installation.

WARNING	
STOP	***Warning:*** *Ensure to apply a minimum of 3 grams of dielectric grease (Anthony P/N: 98-25497-0001) to fill the holes in the socket as shown in Figure 4.2 in "Section 4 – Door Installation".*

Section 16 – Door Reversal

Please read the guidelines in their entirety. It should answer most of your installation questions. For personal and system safety, and optimum product performance, make sure you thoroughly understand the contents before installing, using, or maintaining this product. Some doors are reversible.

PROTECTIVE GEAR NOTICE	
	Protective Eyewear– Potential risk of eye injuries, protective eyewear required when performing this, and any other associated tasks.
	Protective Gloves– Potential risk of injury to your hands, protective gloves required when performing this, and any other associated tasks.
	Footwear Protective – Potential risk of injury to your feet, wearing protective footwear is required when performing this and any other associated tasks.

Remove the door from the frame first and then performthe following steps:

Frame

6. To remove TorqueMaster, insert a flat-head screwdriver into the top center cutout in TorqueMaster, and turn the mounting screw counter-clockwise for less than ½ turn. Lift TorqueMaster off the frame.

7. Pry off (underneath) the plug cap from the mounting hole, on the opposite side of the doorframe with a flat-head screwdriver.

8. Set TorqueMaster onto the opened mounting hole. Align the flanged corners of the mounting tabs with the SAG ADJUSTMENT screw facing the inside of the frame.

9. Use the flat-head screwdriver and turn the TorqueMaster mounting setscrew clockwise for ½ turn, to tighten the mounting flange and lock it in place.

10. Relocate and install the hold-open stand-offs and spacer into the opposite hold-open mount of the same door opening on the frame.

Door

1. Access the hinge pin wire connections in the rail on the hinge side of the door assembly. Disconnect the Hot, Neutral, and Ground wires of the hinge pin.

2. Loosen and remove the hinge pin assembly from the top door rail.

3. Using a plastic mallet and a flat-head screwdriver, remove the torque rod from the bottom of the door assembly.

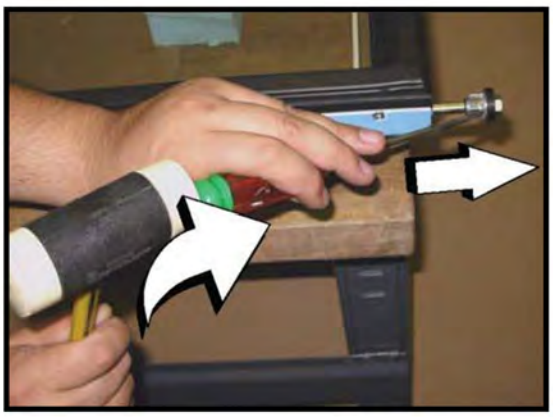

4. Reinstall the hinge pin and the torque rod on the opposite ends of the door assembly.

5. Reconnect the hinge pin wires and confirm all connections.

6. See "*Section 4 – Door Installation*" on how to re-install and for TorqueMaster and Sag adjustment instructions.

WARNING	
STOP	***Warning: Ensure to apply a minimum of 3 grams of dielectric grease (Anthony P/N: 98-25497-0001) to fill the holes in the socket as shown in Figure 4.2 in "Section 4 – Door Installation".***

Appendix A - Gasket Replacement Guidelines

Please read the guidelines in their entirety. It should answer most of your installation questions. For personal and system safety, and optimum product performance, make sure you thoroughly understand the contents before installing, using, or maintaining this product. The Gaskets for the Infinity 60 Models are located on the frame and not the door.

Preliminary Considerations for Servicing Gaskets

Tools Required

Rubber or plastic mallet
Heat gun

Recommendations and Suggestions

- When needed, apply liquid soap to rail plastic and gaskets upon installation, to facilitate insertion into mounting grooves.
- Keep doors and frame surfaces clean for product efficiency. This can also help reduce energy consumption and potential health hazards.
- Whenever binding gasket or plastic parts; use food-grade silicone.
- Always use the correct tool for the job to be performed. This ensures proper installation and minimizes safety risks.
- If there is any doubt about the work to be performed, consult with a certified technician or Anthony's representative.
- Preventative maintenance is recommended to ensure product longevity.

Ordering Replacement Gaskets

Ordering your authentic Anthony replacement gaskets for your doors is easy, visit us at www.anthonystore.com/en to place orders, look up past work orders, and get quotes fast and easy.

EX.2015 / IPR2025-00559 / Page 67 of 85
Anthony Inc. v. ControlTec, LLC

Gasket Removal

PROTECTIVE GEAR NOTICE	
	Protective Eyewear– Potential risk of eye injuries, protective eyewear required when performing this, and any other associated tasks.
	Protective Gloves– Potential risk of injury to your hands, protective gloves required when performing this, and any other associated tasks.
	Footwear Protective – Potential risk of injury to your feet, wearing protective footwear is required when performing this and any other associated tasks.

To remove the gasket from the Frame, follow the steps below:

1. To remove, carefully pull the gasket straight out of the groove on the frame starting at the top corner of the door.

2. Carefully pull the gasket out and downward of the grove in the plastic rail on frame.

3. Continue to pull the gasket from the frame rails gently around the entire perimeter.

WARNING	
	Warning – Warning: The gasket is composed of soft materials with welded miter joints. Use extra care when manually extracting the gasket from the rail grooves to prevent damaging it as well as the plastic rail.

.

Gasket Installation

PROTECTIVE GEAR NOTICE	
	Protective Eyewear– Potential risk of eye injuries, protective eyewear required when performing this, and any other associated tasks.
	Protective Gloves– Potential risk of injury to your hands, protective gloves required when performing this, and any other associated tasks.
	Footwear Protective – Potential risk of injury to your feet, wearing protective footwear is required when performing this and any other associated tasks.

To install the gasket onto the framer, follow the steps below:

1. Carefully align the either one of the two top corners of the replacement gasket onto the top corners of the frame, with the gasket arrow facing the frame rail.

2. With the corners aligned, press the arrows of the gasket into the gasket retainer groove and press firmly on the gasket until the gasket is seated into the groove and corners.

3. Continue to insert the gasket arrow into the groove around the perimeter of the frame surface by pressing the gasket firmly against the plastic rails, sliding from side to side, and applying full pressure against the gasket, forcing the gasket arrow into the groove in the frame plastic.

4. You may have to adjust the gasket in an upward or downward manner to algin the top and bottom corners correctly.

5. When you get near the bottom of the frame, carefully align the two bottom corners of the gasket onto the bottom corners of the plastic frame rails, with the gasket arrow facing the frame rails.

6. Continue to insert the gasket arrow into the groove around the remaining perimeter of the frame surface by pressing the gasket firmly against the plastic rails, sliding from side to side, and applying full pressure against the gasket, forcing the gasket arrow into the groove in the plastic.

7. Confirm that the entire gasket arrow has been completely inserted into the groove of all four plastic rail corners.

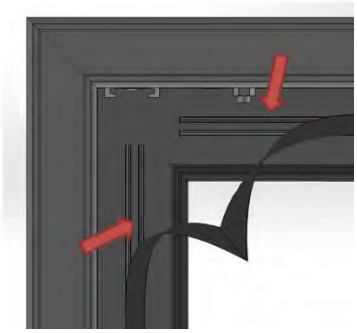

WARNING	
	Note: Pay careful attention that the arrows are firmly pressed into the grooves at the corners. A rubber mallet can be utilized if the arrows do not easily insert into the grooves.

WARNING	
	Note: If the gasket has any signs of deformation from the packaging it is acceptable to use a low heat blower to warm the gasket. This can be performed by blowing warm air on the gaskets in a sweeping motion to warm the gaskets between 80°F and 110°F so the gasket can reshape.

EX.2015 / IPR2025-00559 / Page 69 of 85
Anthony Inc. v. ControlTec, LLC

Appendix B – Anti-Fog Maintenance

The PET Film on your Anthony product is a scratch-resistant, permanent coating that prevents fogging and icing of cold surfaces. On transparent substrates, it provides a clear view (i.e., through a refrigerator door when opened). Described herein are the cleaning instructions should only be performed only by personnel that is qualified and/or fully understand the specific tasks in accordance with this documentation, in particular its warning notices, safety instructions, and the non-use of harmful chemicals which will hinder the effectiveness or damage the PET Film.

The PET Film coating absorbs moisture on its surface as well as absorbs water vapor within its volume. Therefore, it does not only spread water drops to improve visibility at temperatures above 0°C but also inhibits the formation of ice crystals on the surface. In a refrigerator, after closing the door, this function is regenerated by the absorption of water into the dry inner atmosphere. Although it absorbs moisture, the coating does not dissolve in water, so it will not smudge when wet.

WARNING	
	Warning: *Any cleaners which contain abrasives may not be used. Do not contaminate the door with silicone. Do not use tape, glue, stickers, attachments, magic markers, or similar products on the film coating. Do not use razor blades or other mechanical devices to remove foreign residue or objects directly on film coating. Do not use abrasive cleaners or materials on the film coating like Ajax®, Scotch Brite®, or Steel Wool. Do not use cleaners or materials that contain silicone oils or waxes, these hinder the anti-fog performance by leaving residue and/or damage the film coating surface. Examples of these types of cleaners include and are not limited to ArmorAll®, Tilex®, Bleach, Windex® No-Drip, Windex® Wipes, Pledge®, or any product containing silicone oils or waxes.*

Care and Cleaning

Initial wetting/washing with water is recommended to reach full function.

Cleaning can be performed using common household glass cleaners (Sidolin®, Windex®, Mr. Muscle ®) and a tissue or paper towel. However, on very cold surfaces these cleaners may freeze. In these cases, a mixture of 30% pure alcohol and water may be used. At temperatures above 0°C, warm hand temperature water with a mild detergent can be applied.

Other recommended cleaners include:

- Greased Lightning®
- Mr. Clean (degreasing cleaners)
- Windex® Vinegar
- Mean Green®
- Formula 409® Grease & Grime
- Fantastik®
- Windex® original
- MicroClean Professional APC® (formerly Now® all-purpose cleaner)

Recommended cleaning is with a soft dry or slightly damp towel, or with one of the degreasing cleaners listed above. If you have any questions about the use of a particular cleaner, please contact Anthony (800) 772-0900.

WARNING	
	Warning: *Failing to abide by the following cleaning instructions will result in a loss of Anthony Factory Warranty.*

Ajax® is a registered trademark of Colgate-Palmolive Company. | ArmorAll® is a registered trademark of Armored Auto Group. | Fantastik®, Pledge®, Mr. Muscle®, and Windex® are registered trademarks of S.C. Johnson & Son, Inc. | Formula 409® and Tilex® are registered trademarks of The Clorox Company. | Greased Lightning® is a registered trademark of HomeCare Labs. | Mean Green® is a registered trademark of CR Brands, Inc. | MicroClean Professional APC® (formerly Now® all-purpose cleaner) is a registered trademark of The Mirachem Corporation. Mr. Clean Top Job® is a registered trademark of Procter & Gamble. | Scotch Brite® is a registered trademark of 3M. | Sidolin® is a registered trademark of Thompson-Siegel Gessellschaft Mit Beschraenkter Haftung GmbH.

EX.2015 / IPR2025-00559 / Page 70 of 85
Anthony Inc. v. ControlTec, LLC

Appendix C – POM Lock Installation

The POM lock is the only lock currently available for your doors. The POM Lock offers a quick and easy locking mechanism to help keep your doors locked when needed.

There are two (2) different part numbers for the POM lock when ordered. Which Part you will need is determined by the type of frame that is present. If the frame has GIBS (see Figure C.1 andCD.2), use Part Number: 02-11585-0003; this will include POM Lock and Key only.

PROTECTIVE GEAR NOTICE	
	Protective Eyewear– Potential risk of eye injuries, protective eyewear required when performing this, and any other associated tasks.
	Protective Gloves– Potential risk of injury to your hands, protective gloves required when performing this, and any other associated tasks.
	Footwear Protective – Potential risk of injury to your feet, wearing protective footwear is required when performing this and any other associated tasks.

Use Part Number: 02-14288-0001 if a Retro-fit kit is needed. This usually is the case for models WITHOUT Gibs in the frame and frames with locks mounted on the bottom of the door.

Figure C.1: Pom Lock Specifications

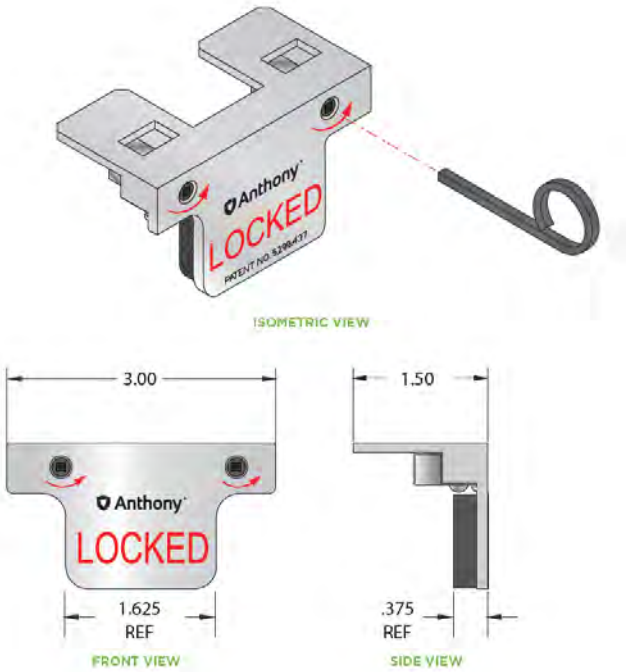

Standard POM Lock

Follow the instructions below to install the POM lock onto your cooler Doors.

1. Remove the dummy plug from the hinge pin access plate on top of the frame on the handle side of the door.

Figure C.2: Plug Removal

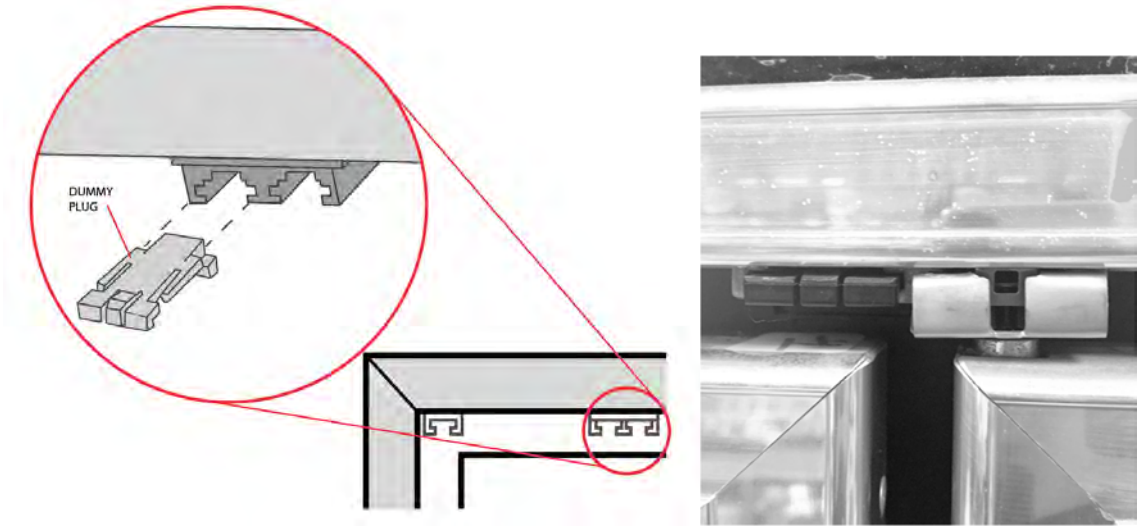

13. The POM Lock inserts into the hinge pin access plate.

Figure C.3: Hinge Pin Access Plate (lock retainer)

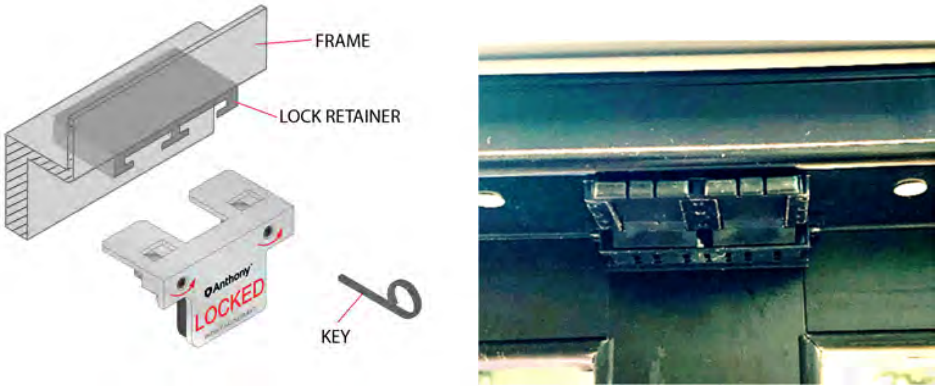

14. Insert the key into the POM Lock square keyhole, then turn the key counterclockwise to lock.
15. Remove the key.
16. To remove the POM Lock, insert the key into the square keyhole and turn the key clockwise.

17. To remove the lock, pull the lock straight out.
18. Replace the dummy plug.

19. Only lock the side that inserts into the hinge pin access plate.

20. Facing the POM Lock; the lock on the right side is for left-hinged doors, and the lock on the left side is for right-hinged doors.

Figure C.4: Front View POM Lock

21. The POM Lock is always installed in the frame, over the top of the handle rail side of the door.

22. To retrofit the POM Lock on existing doors in the field, contact Anthony Customer Service or the local Sales Representative in your area for information and instruction sheets. Or follow instructions provided in *"Appendix E – Retrofitting for POM locks".*

EX.2015 / IPR2025-00559 / Page 73 of 85
Anthony Inc. v. ControlTec, LLC

Appendix D – POM Lock Retrofitting

The POM lock is the only lock currently available for all Anthony Door Models. The POM Lock offers a quick and easy locking mechanism to help keep your doors locked when needed. The following instructions will guide you on how to retrofit an existing installation.

PROTECTIVE GEAR NOTICE	
	Protective Eyewear– Potential risk of eye injuries, protective eyewear required when performing this, and any other associated tasks.
	Protective Gloves– Potential risk of injury to your hands, protective gloves required when performing this, and any other associated tasks.
	Footwear Protective – Potential risk of injury to your feet, wearing protective footwear is required when performing this and any other associated tasks.

Figure D.1: POM Lock Retrofit Kit

The following are instructions on how to Retrofit your doors/frame for the installation of POM Lock:

1. To install the retrofit retainer, measure over 1-1/2” from the edge of the door (handle side) and mark the frame above the door.

Figure D.2: Template Offset location

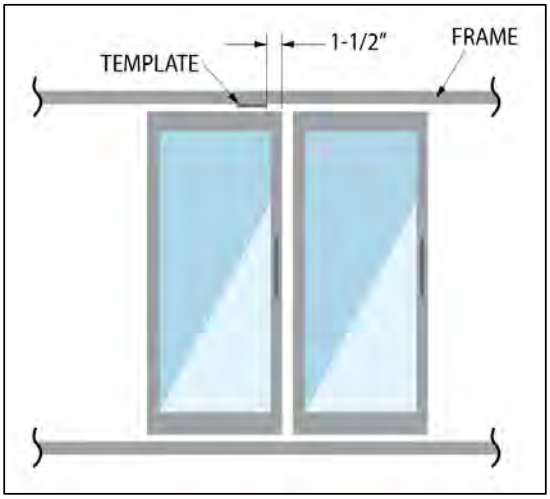

2. Place the template provided on the frame with the right edge of the template on the mark created in Step 1.

Figure D.3: Template Placement on Frame Side view

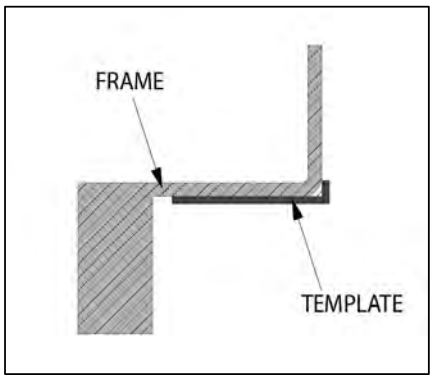

3. Mark the frame through the five holes on the template with a pencil. Remove the template and center punch the marks on the frame.

4. Drill the four outboard holes with an 11/64" drill, and the center hole with a 5/8" drill. Deburr the holes.

5. Place the retrofit retainer bracket over the holes with a rectangular notch cut out. Use #10-32 x 5/16" screws provided and mount the retainer bracket to the frame.

6. Insert the POM Lock into the access plate and turn the key counterclockwise to lock.

Figure D.4: Access Plate Assembly

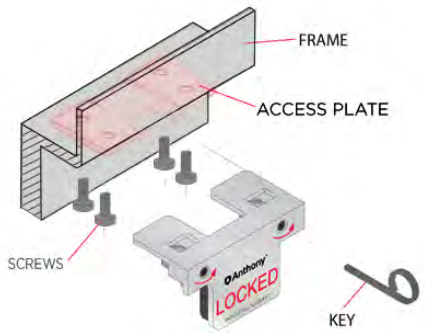

7. Remove the key.

8. To remove the POM Lock, insert the key into the square lock hole and turn the key clockwise.

Figure D.5: Front View POM Lock

Appendix E – Anthony Energy Controller

The main purpose of the Anthony's Energy Controller to maintain the Frames and Doors from condensation. The Energy Controller manages the Anti-sweat heat on the Frame based on the Frame temperature sensor reading. Anti-condensate heat is activated when the Frame temperature sensor temperature reads equal to or less than (Dew point Temperature + 10ºF). At 75ºF Ambient Temperature and 55% Relative Humidity, the Dew point temperature is 58ºF, so the Cut off temperature for the sensor is 68ºF. The Energy Controller comes standard factory installed on all Domestic (US & CANADA) Anthony Walk-In Cooler/Freezer Frames and is ideal for both cooler and freezer applications in high and low humidity environments.

Features

- The Anthony Energy controller activates the Frame heat when the Frame temperature sensor reads equal to or less than (Dew point Temperature + 10ºF).
- The LED sensor is turned on constantly and appears in "RED" when the Heat is On. It turns off when the heat is Off.

Location

- The Energy controller is typically located in the Mullion that houses the LED Driver.
- The humidity sensor (Dew point sensor) is located on the Frame Header on the right side of the Frame.
- The temperature sensor is typically located inside the Frame sill (bottom) towards the left side.

Figure E.1: 4-Door Frame Layout Example for Energy Controller and Sensor Locations

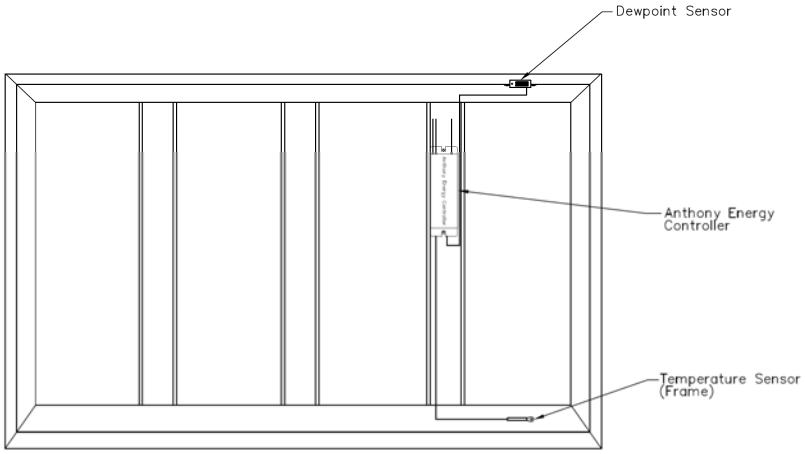

Programming, Settings, and Parameters

Sensor Button

Use the Sensor button to set dewpoint offsets to the unit in addition to the 24-hour gasket seat mode. There are 3 additional modes that the button will go through when it is held (see modes below).

Figure E.2: Energy Controller (Dew Point Sensor)

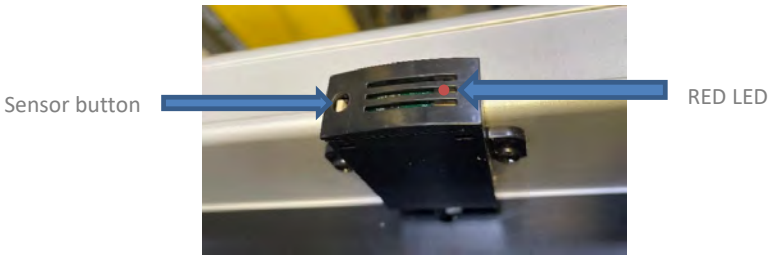

Settings

Offset Status Indicator Mode

In addition to the factory setting, there is an option to add additional offset to the Temperature sensor. This mode is used to verify offset setting (in addition to Dew Point temperature + 10°F) the system is currently in. If the button is held for less than 10 seconds, the LED will blink up to 4 times.

- 1 Blink
  - 1 Blink of the LED indicates that there is no offset added to the (Dewpoint Temperature + 10ºF) calculation
- 2 Blinks
  - 2 Blinks of the LED indicate that there is a 3°F offset added to the (Dewpoint Temperature + 10ºF) calculation. The overall cut off Temperature is (Dew point Temperature + 13ºF)
- 3 Blinks
  - 3 Blinks of the LED indicate that there is a 9°F offset added to the (Dewpoint Temperature + 10ºF) calculation. The overall cut off Temperature is (Dew point Temperature + 19ºF)
- 4 Blinks
  - 4 Blinks of the LED indicate that there is a 18°F offset added to the (Dewpoint Temperature + 10ºF) calculation. The overall cut off Temperature is (Dew point Temperature + 28ºF)

Releasing the button during this time period will return the unit to normal operation. The first mode is intended to inform the technician if there is an offset being added to the dewpoint calculation.

EX.2015 / IPR2025-00559 / Page 78 of 85
Anthony Inc. v. ControlTec, LLC

24-Hour Heat Mode

This mode is used to turn 24-hour constant heat on Frame/Door System, this mode will keep the heat on for a continuous 24-hour period and then revert to the previous setting. When the unit is in a 24-hour heat mode, the LED will blink slowly with an interval of 1 second to indicate that the heater is on for the remainder of the 24-hour heat mode. To set hold down the button for longer than 10 seconds but less than 20 seconds, the 24-hour heat mode is displayed by flashing the LED slowly. If the button is released during this time, the unit will either enter the 24-hour heat mode if it is not in it already or leave it if it is already in this mode.

Offset Setting Options

When the sensor button is held for longer than 20 seconds, the LED will flash once, twice, three times, or four times in Five Second Intervals. The blink represents the Temperature offset point in addition to Cut off Temperature (Dew Point Temperature + 10ºF).

- 1 Blink (1/2 Second Blink. No Blink for 4 1/2 Seconds)
    - No offset (The overall cut off Temperature is (Dew point Temperature + 10ºF)
- 2 Blinks (Blinks for 1 Second. No Blinks for 4 Seconds)
    - 3°F offset (The overall cut off Temperature is (Dew point Temperature + 13ºF)
- 3 Blinks (Blinks for 1 1/2 Seconds. No Blinks for 3 1/2 Seconds)
    - 9°F offset (The overall cut off Temperature is (Dew point Temperature + 19ºF)
- 4 Blinks (Blinks for 2 Seconds. No Blinks for 3 Seconds)
    - 18°F offset (The overall cut off Temperature is (Dew point Temperature + 28ºF)

Release the sensor button when the desired dewpoint offset flash is displayed via the LED. The technician then can check the setpoint by entering the Offset Status Indicator Mode, as previously described.

EX.2015 / IPR2025-00559 / Page 79 of 85
Anthony Inc. v. ControlTec, LLC

Troubleshooting

- When the unit is operating normally, the LED of the sensor will display the status of the heater.
- When the heater is off, the LED will blink very dimly to show that the unit is operating, but the heater is off.
- When the heater is on, the LED will be illuminated constantly.
- Sensor Disconnect - If at any time during normal operation a sensor is disconnected, via a cut wire or fully disconnected the sensor, the LED will blink quickly, and the heater will be on to ensure the glass does not sweat.

Replacement Part Numbers

The following table is a list of replacement part numbers for your Anthony Energy Controller.

Replacement Part Number	Description	Quantity
60-22715-0002	AEC Energy Controller Assembly	1 per Frame Section
40-25072-1005	Screws for AEC Energy Controller	2 per Frame Section
40-12665-3003	Screws to install Humidity Sensor	2 per Frame Section
40-12665-3003	Screw to Install Temperature Sensor	1 per Frame Section
20-24817-0001 20-24817-0002	Humidity Sensor Cover	1 each per Frame Section

Replacement Instructions

The following instructions will guide you on how to replace an Anthony Energy Controller.

1. Locate the Mullion with LED Light Switch and remove the contact plate by disengaging the zipper strips.
2. Locate the Energy Controller and unscrew the Controller.
3. Locate the Temperature sensor located on the Frame sill towards the left side. Remove the contact plate and unscrew the sensor
4. Also, unscrew the Humidity Sensor from the Frame header.
5. Replace the Energy Controller and screw the Temperature Sensor and Humidity Sensor.
6. Check if the newly replaced Energy controller is working. (Refer to the troubleshooting instructions)
7. Put back the Mullion and Sill contact plates by engaging zipper strips. (If needed use new Zipper Strips).

Appendix F – Replacing Frame Mounted Cylinder Locks

The following instructions are for replacing Frame mounted cylinder locks when they need to be replaced.

1. Using a Phillips Head Screwdriver remove the two (2) screws securing each cylinder lock as shown below.
2. Once old cylinders lock is removed proceed to install new ones by securing them with screws to frame.
3. Repeat this process of needed from top of frame doors and any other door openings.

Appendix G – Retrofitting for Frame Mounted Cylinder Locks

The following instructions are for retrofitting an existing Frame to add fame mounted cylinder locks. This retrofit must be done by a experienced service tech.

Tools Required

The following is a list of tools, materials, and other things you will need when installing/retrofitting the Frame mounted cylindr locks.

Tools:

- ***Drill***
- ***.164 Diameter Drill bit***
- ***#2 Philips screwdriver***
- *1 VSTE Lock Assembly (02-22592-000X)*
- *Measuring Tape*
- *Pencil, pen or marker for marking hole locations.*

1. Using a marker identify the center between each door gap and mark it. The typical gap is 0.47 inches.
2. Mark the first two (2) offset marks at 1.844 inches in each direction and 0.385 inches from front of the frame as shown below.
3. Mark two (2) holes, offset an additional 1.812 inches on each end, as shown below.
4. Use a 0.164 Drill but to drill the 4 marked locations.
5. Place two (2) frame mounted cylinders onto frame and use screws to secure onto frame.
6. Repeat of top portion of frame/door and is needed on additional door openings.

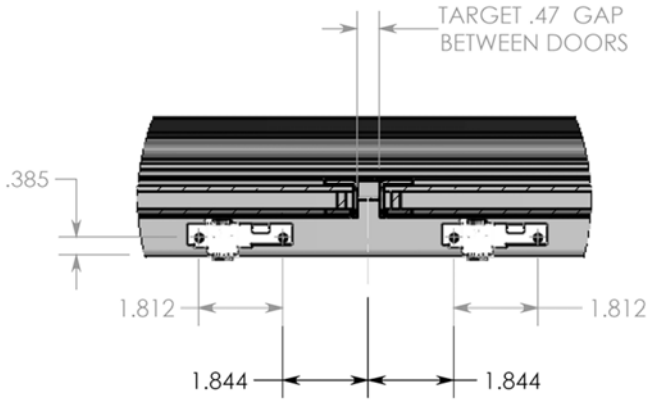

Notes

Notes

Revision History

REV	ORIGINATOR	DESCRIPTION OF CHANGE	DATE
A	A. Martinez / E. Chavez / K. Holst	Initial Release per ECN 18682	11/11/2022
B	V. Gomez / S. Putti	Update protection level to 70%RH. ECN19074.	02/03/2023
C	HOLST	Update Locations ECN19361	9/6/2023