Anthony Energy Controller (60-22715-0002)
Installation Instructions

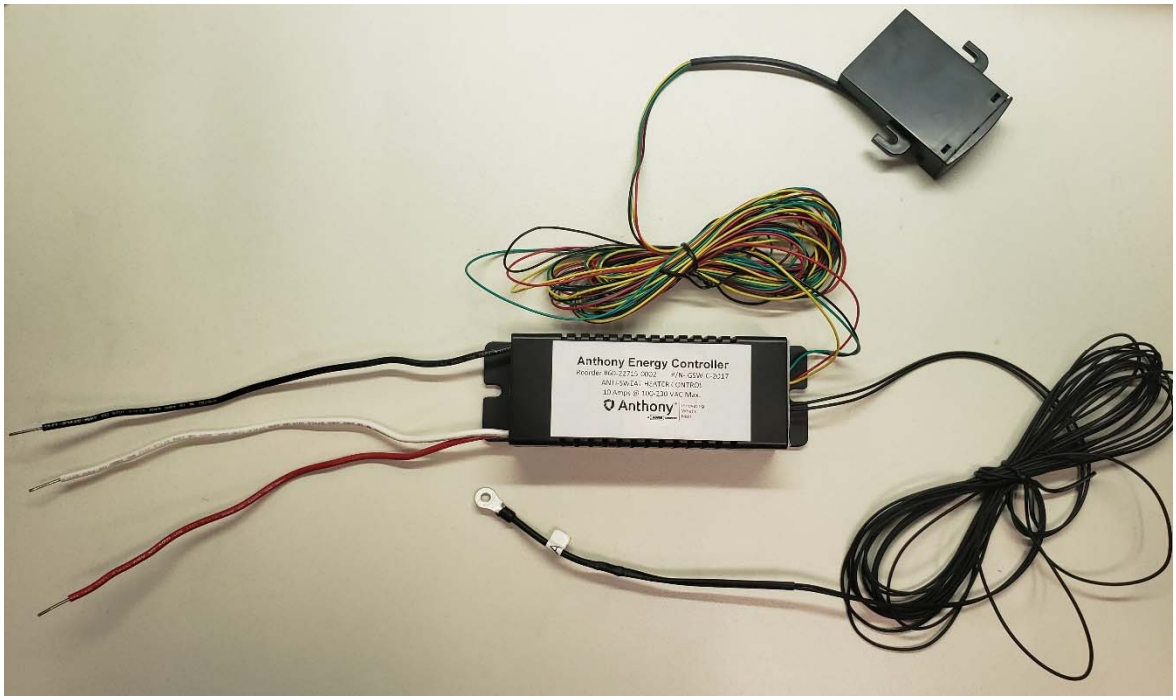

IN – 0051

Anthony Energy Controller (60-22715-0002)
Installation Instruction for All Model Frames

The purpose of this document is to provide a guide for easier installation of the Anthony Energy Controller

Table of Contents

1. Features
2. Controller Unit Installation for Standard Frames
3. Controller Unit Installation for 401/1001 Frames with Raceways
4. Installation Instructions
   4.1 J-Box Controller
5. Wiring Schematic
6. Adjustment Settings
7. Specifications
8. Revision History

STOP

BEFORE YOU BEGIN
Read instructions completely and carefully.

WARNING: TO REDUCE THE RISK OF FIRE, ELECTRICAL SHOCK OR INJURY, OBSERVE THE FOLLOWING:
1) Use this unit in the manner intended by the manufacturer.
2) Switch power off before servicing or cleaning.

1. Features

Anthony Energy Controller:

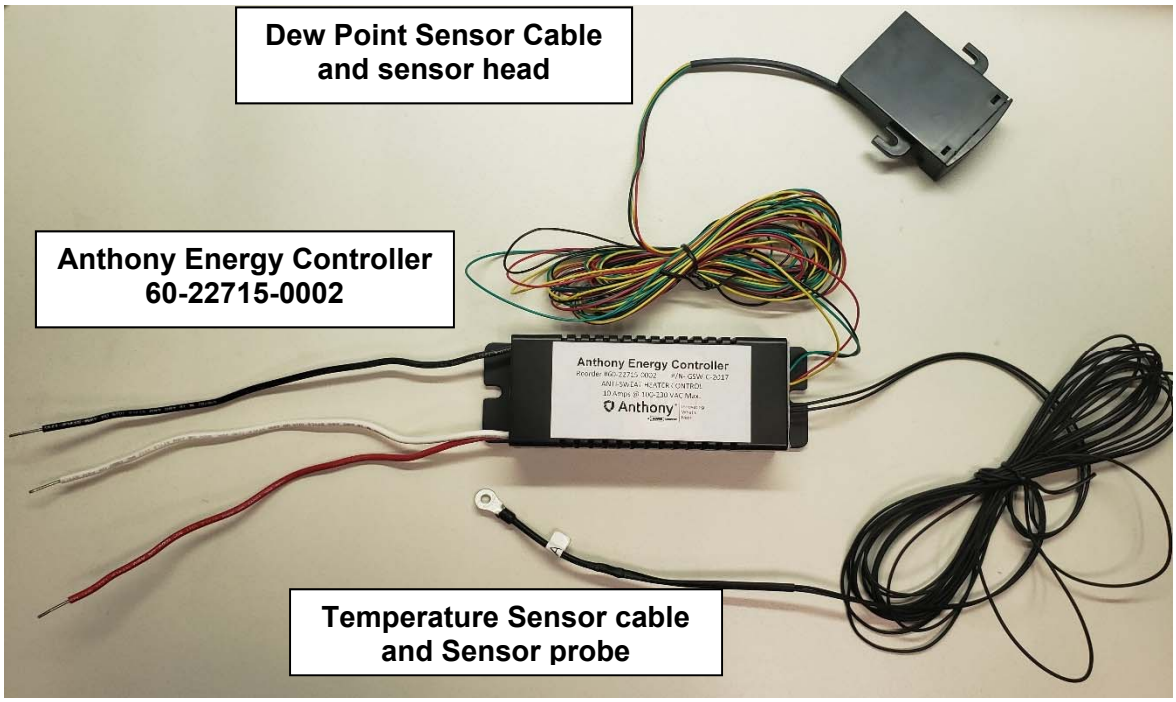

Parts Required
#29 Jobber HSS Drill (55-MA5622)
Screw for the Temperature Sensor (40-12665-3003)
Screw for the Dew Point Sensor (40-12665-3003)
Screw for the Energy Controller (40-12822-1003)

2. Controller Unit Installation for Standard Frames

Note: Mount the Anthony Energy Controller unit on the first center mullion on the right from customer side using Screw 40-12822-1003 (Qty 2).

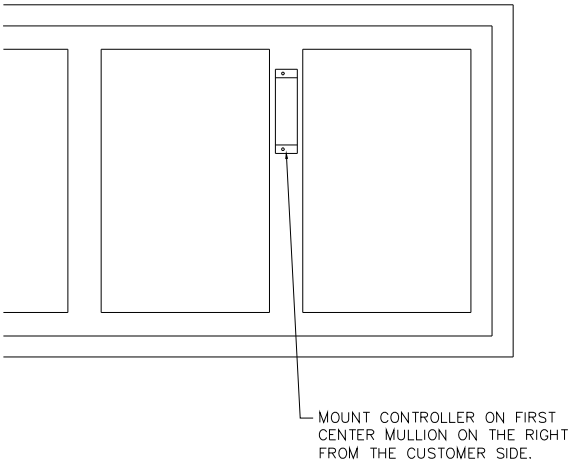

A Before mounting sensor on frame, make sure that the Hold Open Arm does not interfere with the sensor location

B Remove sealing plate by inserting a flat screwdriver under the retaining strip starting at the top of the mullion as illustrated.

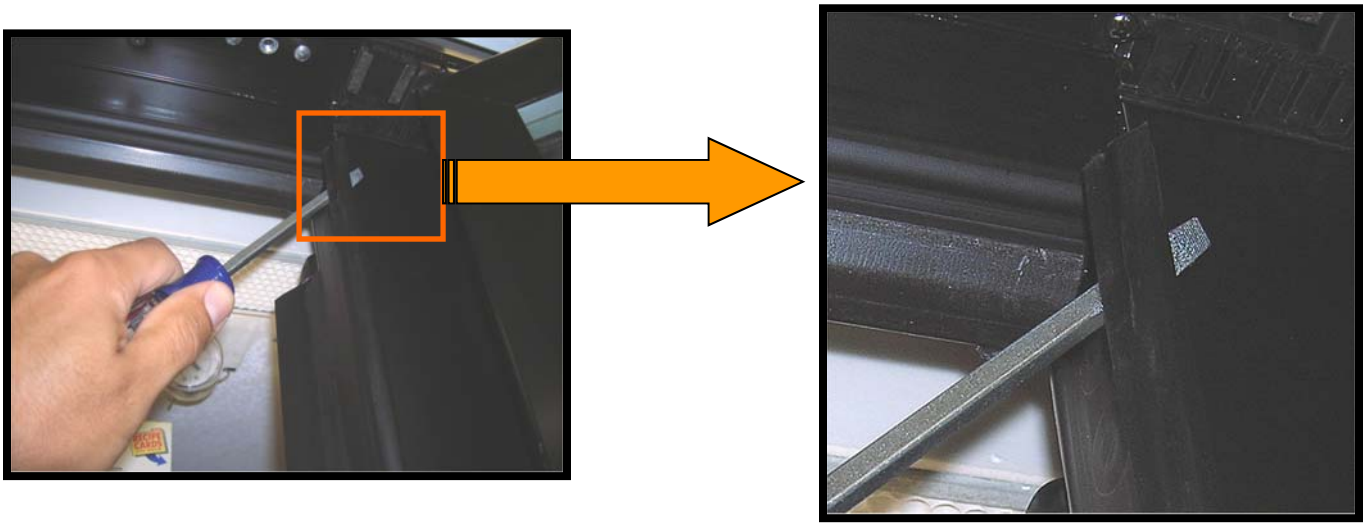

C Vista doors only – If the energy controller does not fit inside the mullion. The technician must install the energy controller unit using J-Box outside the frame.

3. Controller Unit Installation for 401/1001

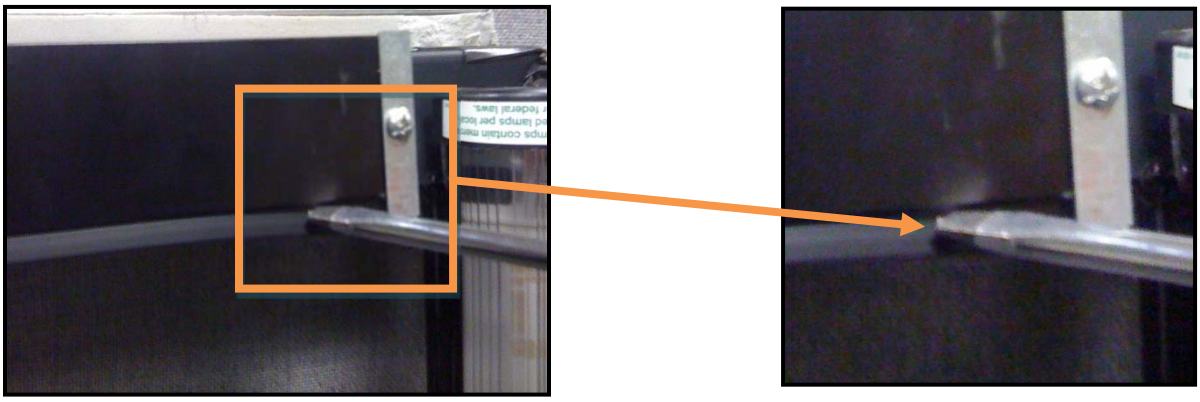

D Remove raceway over slip by inserting a flat screwdriver under the retaining strip starting at the top as illustrated. Raceway located directly behind frame rail.

E Remove raceway slip as needed. Remove raceway bracket with Phillips screwdriver if needed.

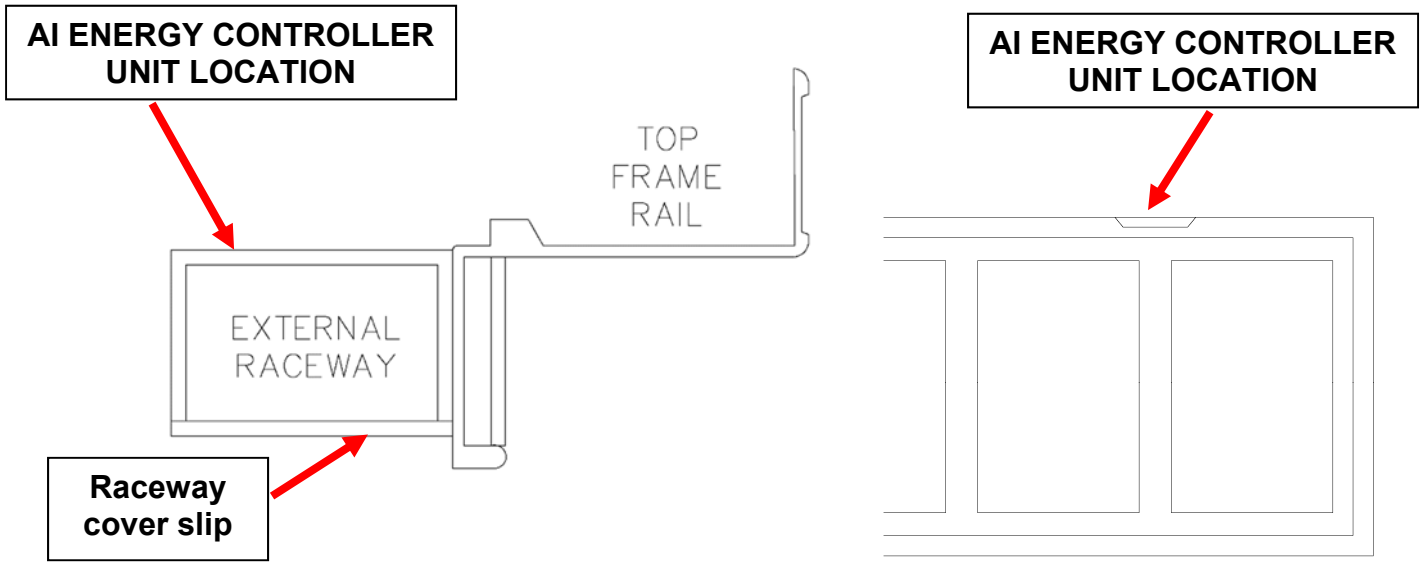

F Mount the energy controller unit on the raceway, on center, where the mullion on the right from customer side using Screw 40-12822-1003 (Qty 2).

4. Installation Instructions

Step 1

- Begin wiring the Energy controller following the wiring schematic **(on sheet 10)**.
- The Dew Point sensor cable must travel from the center mullion to the top of the channel **(as shown below)**.

FRAME AND RACEWAY

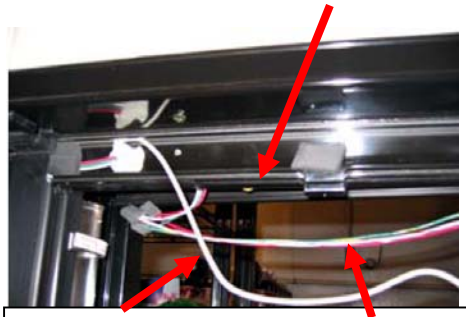

HEATER WIRE CABLES and WIRES

CUTOUT

Step 2

- Cut a 7/16” dia or 3/16” x 7/16” rectangular cut on the contact plate to allow for passage of the sensor cable.
- Apply a ¾” X 2 ¼” piece of seal foam with a cut slit for wire placement on the contact plate to prevent air intake/outtake.
- Insert the sensor cable into the cutout and replace the sealing plate to the frame.
- Route sensor cable back to the controller and connect to the dewpoint sensor port.

Step 3

- Push the excess sensor cable back through the channel, reducing the slack.
- Seat the sensor **(see figure for location)** until flush to the frame flange, pushing it as far back as possible.
- Using 40-12665-3003 (Qty 2), mount the sensor housing on to the mullion of the door system.

Sensor location: upper frame rail above the first door from the right. (See illustration on sheet 8.)

EX.2023 / IPR2025-00559 / Page 6 of 12
Anthony Inc. v. ControlTec, LLC

Note:

- When replacing the Old Sensor from Smart Controller, Close the back two holes on the Frame header flange using Screws 40-12665-3003 (Qty 4).
- Then use the front two holes to install the new Sensor head.

Step 4
Mount the Energy Controller Unit in the mullion using Screws 40-12822-1003 (Qty 2).

Step 5
Make sure that the Dew point sensor cable is connected to the controller unit as indicated with a label

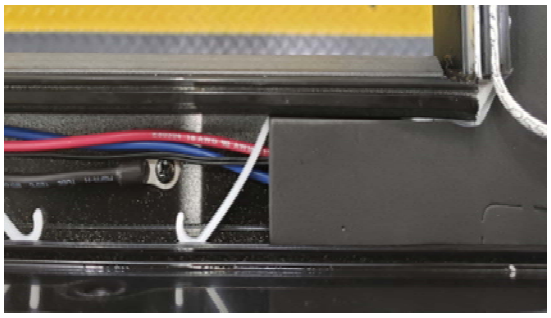

Step 6
Route the Temperature sensor through the mullion to the bottom of the frame and using Screw 40-12665-3003 (Qty 1) mount it approximately 4 inches from the mullion.

Step 7

- Make sure all the Energy Controller Cables are retained in the mullion along with all other wires in the mullion
- Close the Mullion using the Contact plate and Zipper strips.

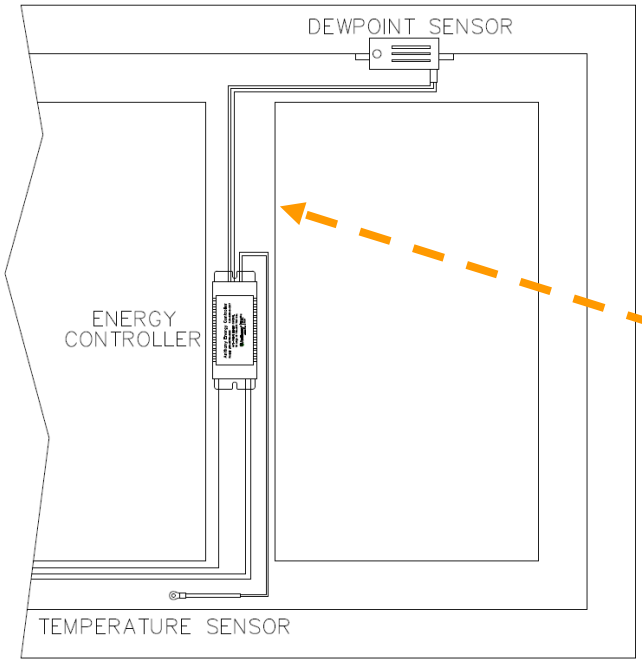

4.1 For J-Box Controller:

- For Single door frames and Two Door B-swing doors, the Controller should be installed in the J-Box outside the Frame in the same location as Led Driver.
- Both the Dew point sensor cable and the Temperature sensor needs to be routed through wire exit conduit.
- Follow same steps from Sheet 6 (Step 3) to install the Dew point sensor.
- Temperature sensor needs to be mounted on the end jamb approximately 4 Inches from the bottom of the frame

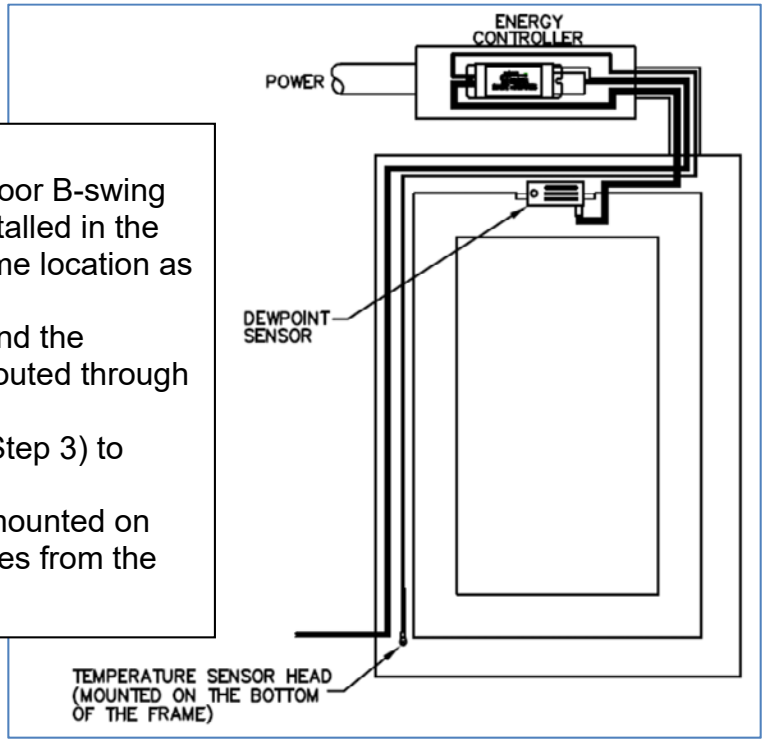

5. Wiring Schematic

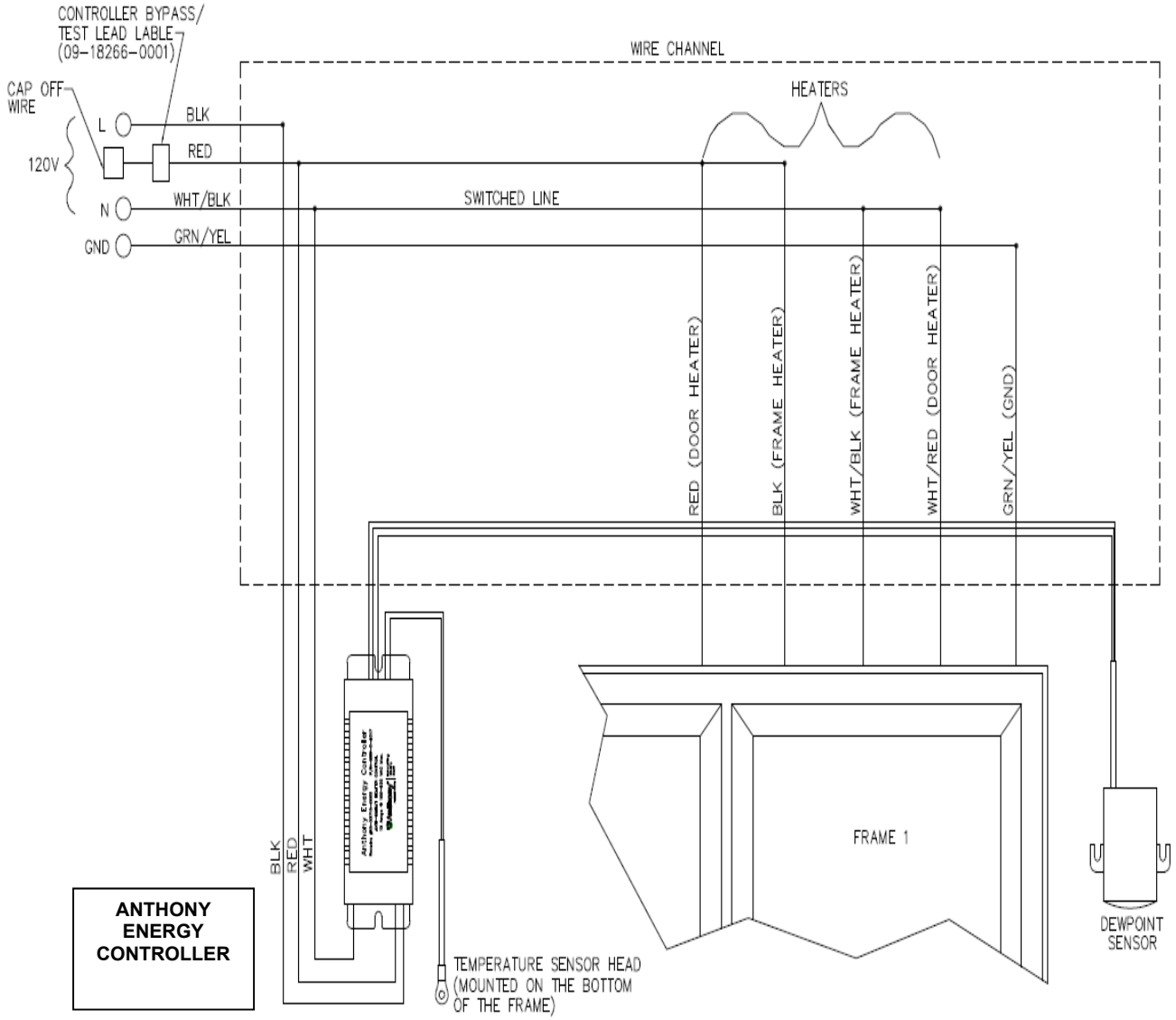

6. Adjustment Settings

<u>The Controller should not require any adjustments to the factory Setting.</u>

Factory setting for sensitivity adjustment is pre-set to 4.5ºF above the dew point temperature. With this Setting, the heat will be turned on when the frame temperature (as measured using Temperature sensor) is 4.5ºF above the Dew point temperature (Measured using Dew point sensor).

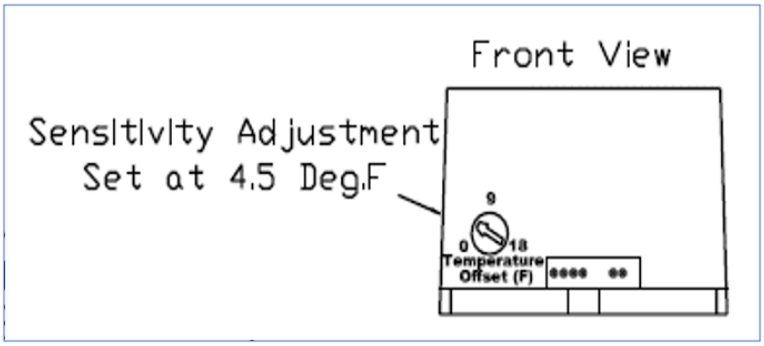

<u>Note: If the frame is sweating, increasing the temperature setting will not add more heat. Please proceed with troubleshooting</u>

If the unit detects sensor failure, the LED on the sensor head will blink slowly.

Make sure both the dew point sensor cable and Temperature sensor cable are connected to the controller.

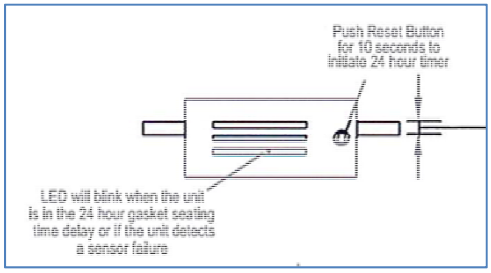

<u>24 Hour Heat Mode:</u>

By pushing the reset button on the sensor head for 10 Seconds, the controller initiates 24 Hour timer and triggers turns the heat on for 24 Hours. During this period the LED will blink slowly to indicate that the heat is on for the remainder of the 24-Hour cycle.

7. Specifications

Preliminary Electrical Specifications	
Input Voltage	100-230 VAC
Frequency	50-60 Hz
Min. Heater On Time	3 Minutes
Gasket Seating Time Delay*	24 Hours
Sensitivity Adj. Range**	0 to 18 F
Heater On Level	Frame Temp=DP
Heater Off Level	Frame Temp=DP+4F
Max. Load	10 Amps
Max. Ambient Temperature	70 C

* 24 Hour Heater Run Time is Initiated by Holding Reset Button for 10 Seconds
** Adjustment Adds 0 to 18F to the Dew Point Calculation

EX.2023 / IPR2025-00559 / Page 11 of 12
Anthony Inc. v. ControlTec, LLC

8. Revision History

Rev.	Orig.	Inc.	Chk.	Description of change	Date
A	SP	DB	SP	Pending Prod Rel Per ECN 16735	12/16/19

EX.2023 / IPR2025-00559 / Page 12 of 12
Anthony Inc. v. ControlTec, LLC