Certification of Accuracy

I, Frank McGee, a translator fluent in the English and Japanese languages, on behalf of Source IP, do solemnly and sincerely declare that the following is, to the best of my knowledge and belief, a true and correct translation of the document(s) listed below in a form that best reflects the intention and meaning of the original text.

I hereby declare that all statements made herein of my own knowledge are true and that all statements made on information and belief are believed to be true; and further that these statements were made with the knowledge that willful false statements and the like so made are punishable by fine or imprisonment, or both, under Section 1001 of Title 18 of the United States Code.

The document is designated as: PCT Publication No. WO00/09623

_____
Frank McGee

October 17, 2024

PCT WORLD INTELLECTUAL PROPERTY ORGANIZATION **WIPO**
International Bureau

INTERNATIONAL APPLICATION PUBLISHED IN ACCORDANCE WITH THE PATENT COOPERATION TREATY

(51) International Patent Classification 6 C09J 9/02, H21L 21/60 | A1 | (11) International Publication No. WO 00/09623

(43) International Publication Date: 24 Feb. 2000 (24.02.00)

(21) International Application No. PCT/JP98/03609

(22) International Filing Date: 13 Aug. 1998 (13.08.98)

(71) Applicants (All Designated States Except US): HITACHI CHEMICAL COMPANY, LTD. [JP]/[JP]; 2-1-1, Nishishinjuku, Shinjuku-ku, Tokyo 163-0449 (JP).

(72) Inventors; and
(75) Inventors/Applicants (US Only): WATANABE, Itsuo [JP/JP]; 1194-6, Ipponmatsu, Chikusei, Ibaraki-ken 308-0842 (JP). TAKEMURA, Kenzo [JP/JP]; 8237-1, Yuki, Yuki-shi, Ibaraki-ken 307-0001 (JP). NAGAI, Akira [JP/JP]; Hitachi Chemical Matsushiro House B306, 3-4-1, Matsushiro, Tsukuba-shi, Ibaraki-ken 305-0035 (JP). ISAKA, Kazuhiro [JP/JP]; WATANABE, Osamu [JP/JP]; KOJIMA, Kazuyoshi [JP/JP]; Shiho Dormitory, 1-15-18, Hanabatake, Tsukuba-shi, Ibaraki-ken 300-3261 (JP).

(74) Agent: TOMITA, Kazuko, et al.; Yokohama HS Building 7F, 2-9-10, Kitasaiwai, Nishi-ku, Yokohama-shi, Kanagawa-ken 220-0004 (JP).

(81) Designated States: AL, AM, AT, AU, AZ, BA, BB, BG, BR, BY, CA, CF, CG, CH, CI, CM, CN, CU, CY, CZ, DE, DK, EE, ES, FI, GB, GE, GH, GM, GN, GR, GW, HU, ID, IE, IL, IS, IT, JP, KE, KG, KR, KZ, LC, LK, LR, LS, LT, LU, LV, MD, MG, MK, ML, MN, MR, MW, MX, NE, NL, NO, NZ, PL, PT, RO, RU, SD, SE, SG, SI, SK, SL, SN, SZ, TD, TG, TJ, TM, TR, TT, UA, UG, US, UZ, VN, YU, ZW; Europe (AT, BE, CH, CY, DE, DK, ES, FI, FR, GB, GR, IE, IT, LU, MC, NL, PT, SE); OAPI (BF, BJ, CF, CG, CI, CM, GA, GN, GW, ML, MR, NE, SN, TD, TG), ARIPO (GH, GM, KE, LS, MW, SD, SZ, UG, ZW); Eurasia (AM, AZ, BY, KG, KZ, MD, RU, TJ, TM)

Appended Documentation
International Search Report

(54) Title:
ADHESIVE FOR BONDING CIRCUIT COMPONENTS, CIRCUIT BOARD, AND METHOD FOR PRODUCING THE SAME

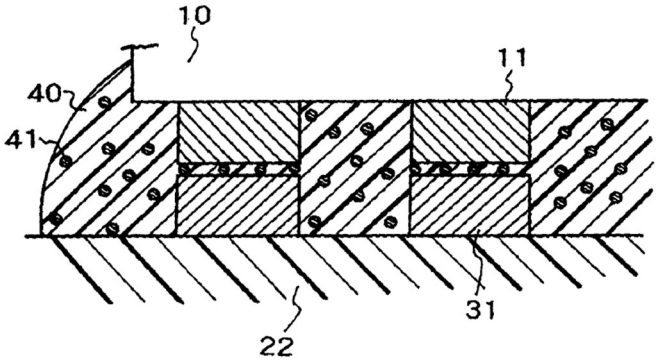

(57) Abstract

The present invention provides: a circuit component connecting adhesive for bonding and securing semiconductor chips to a circuit board and electrically connecting the electrodes of the chips and the board, the adhesive comprising an adhesive resin composition and an inorganic filler material in the amounts of 10 to 200 parts by weight inorganic filler per 100 parts by weight adhesive resin composition; a circuit board on which circuit components have been bonded using the adhesive, and a method of manufacturing this circuit board.

Codes used to identify States party to the PCT on the front pages of pamphlets publishing international applications under the PCT (Reference Information)

AE Arab Emirates
AL Albania
AM Amenia
AT Austria
AU Australia
AZ Azerbaijan
BA Bosnia and Herzegovina
BB Barbados
BE Belgium
BF Burkina Faso
BG Bulgaria
BJ Benin
BR Brazil
BY Belarus
CA Canada
CF Central African Republic
CG Congo
CH Switzerland
CI Côte d'Ivoire
CM Cameroon
CN China
CR Costa Rica
CU Cuba
CY Cyprus
CZ Czech Republic
DE Germany
DK Denmark
DM Dominica
EE Estonia
ES Spain
Fl Finland
FR France
GA Gabon
GB United Kingdom
GD Granada
GE Georgia
GH Ghana
GW Guinea-Bissau
GN Guinea
GR Greece
HR Croatia
HU Hungary
ID Indonesia
IE Ireland
IL Israel
IN India
IS Iceland
IT Italy
JP Japan
KE Kenya
KG Kyrgyzstan
KP Democratic People's Republic of Korea
KR Republic of Korea
KZ Kazakhstan
LC Saint Lucia
LI Liechtenstein
LK Sri Lanka
LR Liberia
LS Lesotho
LT Lithuania
LU Luxembourg
LV Latvia
MA Morocco
MC Monaco
MD Republic of Moldova
MG Madagascar
MK The Former Yugoslav Republic of Macedonia
ML Mali
MN Mongolia
MR Mauritania
MW Malawi
MX Mexico
NE Niger
NL Netherlands
NO Norway
NZ New Zealand
PL Poland
PT Portugal
RO Romania
RU Russian Federation
SD Sudan
SE Sweden
SG Singapore
SI Slovenia
SK Slovakia
SL Sierra Leone
SN Senegal
SZ Swaziland
TD Chad
TG Togo
TJ Tajikistan
TM Turkmenistan
TR Turkey
TT Trinidad and Tobago
TZ Tanzania
UA Ukraine
UG Uganda
US United States of America
Uz Uzbekistan
VN Viet Nam
YU Yugoslavia
ZA South Africa
ZW Zimbabwe

Description

Adhesive For Bonding Circuit Components, Circuit Board, and Method For Manufacturing the Same

Technical Field

The present invention relates to an adhesive for connecting circuit components used to bond and secure semiconductor chips and substrates and electrically connect their electrodes using, for example, the flip chip mounting method, a circuit board to which circuit components are connected in this way, and a method for manufacturing this circuit board.

Background Art

In the field of semiconductor packaging, flip chip mounting, in which an integrated circuit (IC) chip is directly mounted on a printed circuit board or flexible circuit board, is attracting attention as a new mounting method that allows for cost reductions and higher precision.

Known flip chip mounting methods include providing solder bumps on the chip terminals to make solder connections, and establishing electrical connections via a conductive adhesive. These methods experience a problem in that when exposed to various environments, stresses based on the difference in thermal expansion coefficients between chips and the connected substrate occur at the connection interface, resulting in reduced connection reliability.

For this reason, injecting an epoxy resin-based underfill material into the chip/substrate gap is being considered to relieve stress at the connection interface.

However, underfill injection complicates the manufacturing process and is disadvantageous in terms of productivity and cost. In order to solve these problems, flip chip mounting using anisotropic conductive adhesives with anisotropic conductivity and sealing functions has recently attracted attention from the standpoint of simplifying the manufacturing process.

However, if a chip is mounted directly on a substrate via an anisotropic conductive adhesive, stress based on the difference in thermal expansion coefficients between the chip and the substrate occurs at the connection site during temperature cycle tests, and reliability tests such as the thermal shock test, pressure cooker test (PCT), and solder bath immersion test cause increased connection resistance and adhesive peeling. In addition, when protruding electrodes are formed on the connection terminals of a chip, stresses based on the difference in thermal expansion coefficients between the chip and substrate are concentrated at the interface between the protruding electrodes and the chip in reliability testing, causing the protruding electrodes to delaminate from the chip-electrode interface, resulting in poor conductivity.

Disclosure of the Invention

The present invention provides an adhesive for connecting circuit components that does not increase connection resistance or cause delamination of the adhesive at the connection site, thus greatly improving connection reliability, a circuit board to which circuit components are connected in this way, and a method for manufacturing this circuit board.

A first aspect of the present invention is an adhesive for connecting circuit components to be interposed between opposing circuit electrodes to electrically connect the electrodes in the direction of pressure by applying pressure to the opposing circuit electrodes, wherein the adhesive comprises an adhesive resin composition and inorganic filler, in an amount from 10 to 200 parts by weight of the inorganic filler per 100 parts by weight of the adhesive resin composition.

A second aspect of the present invention is an adhesive for connecting circuit components to be interposed between opposing circuit electrodes to electrically connect the electrodes in the direction of pressure by applying pressure to the opposing circuit electrodes, wherein the adhesive comprises an adhesive resin composition and inorganic filler, and has a multilayer configuration provided with a first adhesive layer containing 10 to 200 parts by weight of the inorganic filler per 100 parts by weight of the adhesive resin composition, and a second adhesive layer composed primarily of the adhesive resin composition.

A third aspect of the present invention is an adhesive for connecting circuit components to be interposed between opposing circuit electrodes to electrically connect the electrodes in the direction of pressure by applying pressure to the opposing circuit electrodes, wherein the adhesive comprises an adhesive resin composition and inorganic filler, and has an average coefficient of thermal expansion at 110 to 130°C after curing of the adhesive of 200 ppm/°C or less. Preferably, the average coefficient of thermal expansion of the adhesive at 110 to 130°C after curing is from 30 to 200 ppm/°C.

A fourth aspect of the present invention is an adhesive for connecting circuit components to be interposed between opposing circuit electrodes to electrically connect the electrodes in the direction of pressure by applying pressure to the opposing circuit electrodes, wherein the adhesive has a multilayer configuration provided with a third adhesive layer and a fourth adhesive layer having different physical values from each other.

Preferably, the modulus of elasticity of the third adhesive layer after curing is greater than the modulus of elasticity of the fourth adhesive layer after curing, and the modulus of elasticity of the fourth adhesive layer at 40°C after curing is from 100 to 2000 MPa.

Preferably, the coefficient of thermal expansion of the third adhesive layer is smaller than the coefficient of thermal expansion of the fourth adhesive layer, and the thermal expansion coefficient of the third adhesive layer from 30 to 100°C is from 20 to 70 ppm/°C.

Preferably, the glass transition temperature of the third adhesive layer is higher than the glass transition temperature of the fourth adhesive layer, and the glass transition temperature of the third adhesive layer is 120°C or higher.

At least one of the third and fourth adhesive layers can contain an adhesive resin composition and an inorganic filler material in an amount of 10 to 200 parts by weight per 100 parts by weight of the adhesive resin composition.

The adhesive can contain 0.1 to 30 parts by volume of conductive particles per 100 parts by volume of the adhesive resin composition.

In the adhesive, the modulus of elasticity of the adhesive resin composition at 40°C after curing is preferably from 30 to 2000 MPa.

The adhesive composition can contain an epoxy resin, an acrylic rubber, and a latent curing agent, and the acrylic rubber preferably contains a glycidyl ether group in the molecule.

The shape of the adhesive is preferably film like.

The present invention is also a circuit board obtained by arranging a first circuit component with a first connection terminal and a second circuit component with a second connection terminal with the first connection terminal and second connection terminal opposing each other, interposing an adhesive between the first connection terminal and the second connection terminal opposing each other, and applying pressure to electrically connect the first second connection terminal and the second connection terminal opposing each other, wherein the adhesive is an adhesive for connecting circuit components according to the present invention.

When the first circuit component with a first connection terminal is an inorganic insulating substrate with a first connection terminal and the second circuit component with a second connection terminal is an organic insulating substrate with a second connection terminal, the first adhesive layer or third adhesive layer of the multilayer adhesive is used for bonding on the first circuit component side.

The present invention is an adhesive for connecting circuit components to be interposed between opposing circuit electrodes to electrically connect the electrodes in the direction of pressure by applying pressure to the opposing circuit electrodes, wherein the adhesive comprises an adhesive resin composition and inorganic filler, in an amount from 10 to 200 parts by weight of the inorganic filler per 100 parts by weight of the adhesive resin composition, or a multilayer adhesive comprising a first adhesive layer containing 10 to 200 parts by weight of the inorganic filler per 100 parts by weight of the adhesive resin composition, and a second adhesive layer composed primarily of the adhesive resin composition.

In such an adhesive for connecting circuit components, the adhesive resin composition of the adhesive for connecting circuit components containing 10 to 200 parts by weight of an inorganic filler per 100 parts by weight of the adhesive resin composition preferably has a modulus of elasticity of 30 to 2000 MPa at 40°C after curing. The modulus of elasticity of the adhesive at 40°C can be 100 to 5,000 MPa, and is preferably 2,000 MPa or higher and 3,500 MPa or less.

The adhesive resin composition has a modulus of elasticity of 30 to 2,000 MPa at 40°C after curing, but if the modulus of elasticity of the adhesive at 40°C exceeds 2,000 MPa due to including the inorganic filler, the thermal expansion coefficient can be reduced using the inorganic filler along with stress relaxation using a low modulus adhesive resin composition, and this can provide an adhesive for connecting circuit components with excellent connection reliability.

The second adhesive layer, which is primarily composed of the adhesive resin composition, preferably does not contain an inorganic filler. However, it may contain less than the amount of inorganic filler in the first adhesive layer to adjust properties, for example, less than 50% by weight, and preferably less than 20% by weight.

The second adhesive layer, which is primarily composed of an adhesive resin composition, can be an adhesive layer with an elastic modulus of 100 to 2000 MPa at 40°C after curing.

The adhesive for multilayer configurations used in the present invention is preferably arranged according to the modulus of elasticity or coefficient of thermal expansion of the circuit components to be connected.

In other words, the adhesive is preferably arranged so that the third adhesive layer side with a relatively large elastic modulus or small thermal expansion coefficient or high glass transition temperature is bonded to the circuit component side with a relatively large elastic modulus or small thermal expansion coefficient, and so that the fourth adhesive layer side with a relatively small elastic modulus or large thermal expansion coefficient or low glass transition temperature is bonded to the circuit component side with a relatively small elastic modulus or large thermal expansion coefficient.

In the multilayer configuration adhesive used in the present invention, for example, when connecting a semiconductor chip to an organic insulating substrate, for the purpose of relieving stress based on the difference in thermal expansion coefficient between the chip and the organic insulating substrate, the modulus of elasticity at 40°C after curing of the fourth adhesive layer comprising the surface on the organic insulating substrate side is preferably 100 to 2000 MPa. The elastic modulus at 40°C after curing of the third adhesive layer, which constitutes the surface on the semiconductor chip side, is greater than that of the fourth adhesive layer, and 500 to 5000 MPa is used.

The coefficient of thermal expansion from 30 to 100°C of the third adhesive layer comprising the surface on the semiconductor chip side is preferably 20 to 70 ppm/°C for the purpose of relieving stress due to the difference in thermal expansion coefficients between the semiconductor chip and the organic insulating substrate, and the coefficient of thermal expansion from 30 to 100 of the fourth adhesive layer, which constitutes the surface on the organic insulating substrate side is preferably greater than that of the third adhesive layer and is 30 to 100 ppm/°C.

In addition, the glass transition temperature of the third adhesive layer comprising the surface on the semiconductor chip side is preferably 120°C or higher and 180°C or lower for the purpose of relieving stress due to the difference in thermal expansion coefficient between the semiconductor chip and the organic insulating substrate,

and the glass transition temperature of the fourth adhesive layer, which constitutes the surface on the organic insulating substrate side is preferably smaller than that of the third adhesive layer.

At least one of the third and fourth adhesive layers can contain an inorganic filler.

The thermal expansion coefficient and glass transition temperature of the cured adhesive film, which corresponds to the adhesive post-bonding stage, can be measured, for example, using a TM-7000 thermo-mechanical testing machine from the Vacuum Science and Engineering Corporation (tensile mode, load of 5 gf, temperature increase of 5°C/min). Curing of the adhesive film is performed under the same conditions as the heating temperature and heating time during the bonding process, and curing can be performed by immersing the adhesive film in an oil bath. Such adhesive film cured products are cured at 90% or more of the total cured heat generated during the measurement using a differential scanning calorimeter (DSC).

The adhesive resin composition used in the present invention can be a mixture of an epoxy resin and a latent curing agent such as imidazole, hydrazide, a boron trifluoride monoamine complex, a sulfonyl salt, an amine imide, a polyamine salt, or dicyandiamide, and an adhesive resin composition with a modulus of elasticity of 30 to 2,000 MPa at 40°C after bonding is preferred for the purpose of alleviating stress based on the difference in thermal expansion coefficients between circuit components.

For example, a preferred adhesive resin composition that provides good flowability and high connection reliability during connection is obtained by an epoxy resin and a latent curing agent such as imidazole, hydrazide, a boron trifluoride amine complex, a sulfonyl

salt, an amine imide, a polyamine salt, dicyandiamide, etc. mixed with an acrylic rubber to realize an elastic modulus of 30 to 2,000 MPa at 40°C after bonding.

The elastic modulus of the cured adhesive resin composition, which corresponds to the post-bonding stage of the adhesive resin composition, can be measured by the DVE method using, for example, the Rheospectra DVE-4 from Rheology Co., Ltd. (tensile mode, frequency of 10 Hz, temperature increase of 5°C/min, measured from -40°C to 250°C). The curing of the adhesive resin composition adhesive is performed under the same conditions as the heating temperature and heating time during the bonding process, and curing can be performed by immersing the adhesive resin composition film in an oil bath. Such adhesive film cured products are cured at 90% or more of the total cured heat generated during the measurement using DSC.

One or more epoxy resins can be used, and examples include bis-phenol epoxy resins derived from epichlorohydrin and bis-phenol A, F, or AD, etc., epoxy novolac resins derived from epichlorohydrin and phenol novolac or cresol novolac, naphthalene epoxy resins with a framework containing a naphthalene ring, glycidylamine, glycidyl ether, biphenyl, and epoxy compounds with two or more glycidyl groups in the molecule such as alicyclic compounds. High-purity epoxy resins with less than 300 ppm of impurity ions (Na^+, Cl^-, etc.), hydrolyzable chlorines, etc. are preferred to prevent electron migration.

For epoxy resins, trifunctional or higher multifunctional epoxy resins and/or naphthalene epoxy resins are preferred for lowering the thermal expansion coefficient and improving the glass transition temperature. Trifunctional or higher multifunctional epoxy resins include phenol novolac epoxy resins, cresol novolac epoxy resins, tris-hydroxyphenylmethane epoxy resins, tetraphenylmethane epoxy resins, and dicyclopentadienphenol epoxy resins. Naphthalene epoxy resins have a framework containing at least one naphthalene ring per molecule. These include naphthol and naphthalenediol resins.

The acrylic rubber can be a polymer or copolymer with at least one monomer component selected from acrylic acid, acrylic esters, methacrylic esters, and acrylonitrile, and among these, use of copolymerized acrylic rubbers containing glycidyl acrylate and glycidyl methacrylate with glycidyl ether groups is especially preferred.

The molecular weight of these acrylic rubbers is preferably 200,000 or more in order to increase the cohesive strength of the adhesive resin composition. When the amount of acrylic rubber in the adhesive resin composition is less than 15% by weight, the elastic modulus at 40°C after bonding exceeds 2,000 MPa, and when the amount is more than 40% by weight, the modulus of elasticity is low, but the melt viscosity during connection is high. Also, due to the reduced exclusion of melted adhesive between connected electrode interfaces or connected electrode and conductive particle interfaces, an electrical connection between connected electrodes or between connected electrodes and conductive particles cannot be ensured. For this reason, 15 to 40% by weight is preferred for the amount of acrylic rubber.

These acrylic rubbers included in an adhesive resin composition have a peak dielectric loss tangent temperature around 40 to 60°C due to the rubber component, which allows for a lower elasticity for the adhesive composition.

The modulus of elasticity of the adhesive resin composition is preferably 30 to 2,000 MPa at 40°C after curing, and the modulus of elasticity of the adhesive at 40°C can be 100 to 5,000 MPa and can exceed 2,000.

The adhesive can also contain a thermoplastic resin such as a phenoxy resin to make film formation easier. Phenoxy resins are particularly preferred because they are structurally similar to epoxy resins and have features such as excellent compatibility and adhesiveness with epoxy resins. Film formation can be performed by liquefying an adhesive composition consisting of at least an epoxy resin, acrylic rubber, phenoxy resin, and latent curing agent, and conductive particles by dissolution or dispersion in an organic solvent, applying the liquid to a release substrate surface, and removing solvent below the active temperature of the curing agent. A mixture of an aromatic hydrocarbon solvent and an oxygen-containing solvent is preferred for this process because it improves the solubility of the materials.

The inorganic filler used in the present invention is not particularly limited, and can be a powder such as fused silica, crystalline silica, calcium silicate, alumina, and calcium carbonate. The amount of inorganic filler is 10 to 200 parts by weight per 100 parts by weight of the adhesive resin composition. Although a larger amount is more effective at lowering the thermal expansion coefficient,

a large amount will cause poor adhesion and poor conduction due to adhesive exclusion at the connection site. Meanwhile, a small amount does not sufficiently reduce the coefficient of thermal expansion. Therefore, the amount used is preferably from 20 to 90 parts by weight. The average particle size is preferably 3 μm or less in order to prevent poor conduction at the connection site. In addition, a spherical filler should be used for the purpose of keeping the resin from losing its fluidity and damaging the passivation film of the chip during the connection process.

The adhesive can also be mixed with conductive particles for the purpose of actively imparting anisotropic conductivity to absorb variations in the height of chip bumps and substrate electrodes. In the present invention, the conductive particles can be, for example, particles of metals such as Au, Ag, Cu, or solder, and a conductive layer of Ni, Cu, Au, or solder is preferably provided on a spherical polymer core material such as polystyrene. A surface layer of Su, Au, solder, etc. can also be formed on the surface of conductive particles. The particle size should be smaller than the smallest interval between the electrodes on the substrate, and if there is a height variation in the electrodes, it should be greater than the height variation, preferably 1 to 10 μm. The amount of conductive particles dispersed in the adhesive is 0.1 to 30 parts by volume per, preferably 0.2 to 15 parts by volume, per 100 parts by volume of the adhesive resin composition.

The adhesive of the present invention can be used as a film-like adhesive.

A film-like adhesive can be obtained by liquefying an adhesive composition consisting of epoxy resin, acrylic rubber, latent curing agent, etc., by dissolving or dispersing it in an organic solvent, applying the liquid on a releasable substrate, and removing the solvent at or below the active temperature of the curing agent.

A multilayer film-like adhesive can be obtained, for example, by applying a first or third film-like adhesive and a second or fourth film-like adhesive individually to the surface of a separator film (releasable base material) made of, for example, polyethylene terephthalate or a fluorine resin, and laminating the first or third film-like adhesive and the second or fourth film-like adhesive under pressure or heat and pressure to obtain a film-like adhesive consisting of the first or third film-like adhesive and the second or fourth film-like adhesive. A multilayer film-like adhesive can also be obtained, for example, by applying a first or third film-like adhesive (or second or fourth film-like adhesive) on the surface of a separator film, and then applying a second or fourth film-like adhesive (or first or third film-like adhesive) on top of the first or third film-like adhesive or second or fourth film-like adhesive.

The total thickness of the first or third film-like adhesive and the second or fourth film-like adhesive is preferably from 20 to 120 μm, and the ratio of the individual thicknesses of the first or third film-like adhesive to the second or fourth film-like adhesive is preferably in the range of 1:9 to 9:1. For a connection between a semiconductor chip and an organic insulating substrate, the ratio of the first or third film-like adhesive to the second or fourth film-like adhesive is in the 3:7 to 7:3 range.

The film thickness of the film-like adhesive should be thicker than the interval between the first and second circuit components, and generally at least 5 μm thicker than the interval.

In the present invention, the circuit components can be chip components such as semiconductor chips, resistor chips, and capacitor chips, etc., and substrates such as printed circuit boards and polyimide ester-based flexible circuit boards.

Chip components have many connection terminals formed on non-metallic inorganic insulating substrates such as silicon, glass, ceramic, and compound semiconductor substrates, while printed circuit boards, polyimide and polyester-based flexible circuit boards, and other substrates have many connection terminals formed on organic insulating substrates.

Organic insulating substrates with electrodes (connection terminals) corresponding to the terminals of a semiconductor chip are used as substrates for mounting chip components.

The organic insulating substrate can be a laminate made by impregnating a synthetic resin film such as polyimide resin or polyester resin film, or a glass substrate such as a glass cloth or glass non-woven fabric substrate with a resin such as a polyimide resin, epoxy resin, or phenol resin and then curing the resin.

Another type that can be used is a multilayer wiring board having electrodes for connection to chip terminals, a surface insulating layer on which these electrodes are formed, a predetermined number of insulating layers, a predetermined number of wiring layers located between each insulating layer, and conductor holes that electrically connect predetermined electrodes and wiring layers.

The multilayer wiring board is preferably a build-up multilayer substrate in which insulating layers and conductor circuit layers are formed alternately on the surface of a substrate with the insulating layers made of glass cloth or a wiring substrate with one or more layers of conductor circuits.

The surface insulating layer can be a resin film, and the resin film can be selected from epoxy resins, polyimide resins, polyamide-imide resins, modified polyfluorene ether resins, phenoxy resins, amide epoxy resins, phenol resins, and mixtures and copolymers thereof, as well as films of heat-resistant thermoplastic phenolic resins such as polysulfone, polyethersulfone, polyetheretherketone, fully aromatic liquid crystalline polyester, and fluoropolymers. An organic or inorganic filler can be included in the resin film. The insulating layer made of resin reinforced with a glass substrate can be a prepreg made of glass cloth, glass non-woven fabric, or other glass substrate impregnated with an epoxy resin, phenol resin, or other resin and cured.

A circuit component can be provided with a number of connection terminals (and sometimes a single terminal). At least a single pair of these circuit components are arranged with at least some of the connection terminals on the circuit components opposing each other, and an adhesive is interposed between the opposing connection terminals, which is then heated and subjected to pressure to electrically connect the opposing connection terminals to each other to form a circuit board.

By applying heat and pressure to at least one pair of circuit components, opposing connection terminals are electrically connected to each other by direct contact or via conductive particles in an anisotropic conductive adhesive.

Bumps formed by plating or gold wire tips are melted using a torch to form gold balls, and the balls are pressed against the electrode pads. Protruding electrodes such as wire bumps are then obtained by cutting wires to be used as connection terminals.

The circuit board manufacturing method will now be described using a case in which a first circuit component consisting of an inorganic insulating substrate and a second circuit component consisting of an organic insulating substrate are connected using a film-like adhesive.

A circuit board of the present invention can be obtained by arranging a first circuit component comprising an inorganic insulating substrate with first connection terminals and a second circuit component comprising an organic insulating substrate with second connection terminals are arranged with the first and second connection terminals opposing each other, interposing an adhesive for connecting circuit components between the first and second connection terminals arranged opposite each other so that a first or third adhesive layer is on the first circuit component side, and applying pressure to electrically connect the first and second connection terminals opposing each other.

Specifically, for example, the film-like adhesive is temporarily fixed to the second circuit member by first bringing the film-like second or fourth adhesive layer into contact with the second circuit component. Then, the electrodes of the first circuit component are aligned with the electrodes of the second circuit component, and a load of 20 to 150 gf per electrode is applied from the first circuit component side while the temperature of the film-like adhesive is held at 180 to 200°C for 10 to 20 seconds to cure the film-like adhesive. This electrically connects the electrodes of the first circuit component to the electrodes of the second circuit component, and the connection between the first and second circuit members is maintained by the curing of the film-like adhesive.

An example in which a semiconductor chip is connected to a mounting substrate will be described with reference to FIG. 1 and FIG. 2. FIG. 1 shows an example in which a semiconductor chip is connected to a mounting substrate using an adhesive that does not contain conductive particles. FIG. 2 shows the connection site when the semiconductor chip and the mounting substrate in FIG. 1 are connected using an adhesive containing conductive particles.

The electronic component device shown in FIG. 1 consists of a mounting substrate 20 and a semiconductor chip 10 mounted on it. FIG. 1 shows only a portion of the electronic component device. In reality, other components such as semiconductor chips are mounted on the mounting substrate 20.

The semiconductor chip 10 has protruding electrodes (bumps) on one of its surfaces that serve as the connecting electrodes 11. An electrical connection is established with the mounting substrate via these connecting electrodes 11.

The mounting substrate 20 has a plurality of insulating layers 21, 22, a plurality of wiring layers 32, 33 arranged via each insulating layer 21, 22, electrode terminals 31 for connection to the connection electrodes 11 on the semiconductor chip 10, and a conductor 34 passing through the insulating layers 21, 22 to electrically connect specific wiring layers among the wiring layers 32, 33. In order to allow the conductors 34 to pass through, holes 25 are provided in the insulating layers 21, 22 at the necessary locations as through-holes. In other words, this mounting board is a resin composite multilayer wiring board.

Here, wiring layer 32 is provided as an inner layer circuit, and wiring layer 33 and the connecting electrode terminals 31 are provided as an outer layer circuit. The connecting electrode terminals 31 serve as a conductor circuit for mounting chips.

The projection electrodes (bumps) serving as connecting electrodes 11 on the semiconductor chip 10 are aligned with the connecting electrode terminals 31 on the surface of the mounting substrate 20. A film-like adhesive 40 for bonding is placed between the semiconductor chip 10 and the mounting substrate 20. In this state, heat and pressure are applied from the semiconductor chip 10 side, the adhesive 40 flows and hardens to mechanically bring the connection electrodes 11 on the semiconductor chip 10 into direct contact with the connection electrode terminals 31 on the mounting substrate 20 surface to obtain an electrical connection.

When an adhesive 40 such as an anisotropic conductive adhesive with dispersed conductive particles 41 is used, the connecting electrodes 11 and the connecting electrode terminals 31 are connected via the conductive particles 41 interposed between them and bonded as shown in FIG. 2. When an anisotropic conductive adhesive 40 is used and the opposing electrode surfaces to be connected are brought into contact with each other under pressure, an electrical connection is established between the opposing electrodes via the conductive particles present between them. While the adhesive contains conductive particles between adjacent electrodes, it does not exhibit conductivity due to the low density of conductive particles.

The mounting substrate 20 has at least one first insulating layer 21 made of a resin reinforced with a glass substrate, and a second insulating layer 22 that, as the outermost layer, constitutes at least one layer on the side on which the electronic components are bonded and secured. In the example shown in FIG. 1, the second insulating layer 22 is also provided on a side different from the one on which the electronic components are bonded and secured.

Because the adhesive of the present invention can absorb stress at the interface between the semiconductor chip and the adhesive for connecting circuit components and absorb stress caused by thermal shock, PCT, solder bath immersion tests, and other reliability tests when the adhesive resin composition has a tensile modulus of 30 to 2000 MPa at 40°C, there is no increase in connection resistance or delamination of the adhesive at the connection area after reliability testing, greatly improving connection reliability. In the present invention, because a gradient of physical properties can be created in the thickness direction of the adhesive for connecting circuit components, it can absorb internal stresses that occur during reliability tests such as thermal shock, PCT, and solder bath immersion tests. Therefore, there is no increase in connection resistance or delamination of the adhesive at the connection area after reliability testing, greatly improving connection reliability. The film-like adhesives are also easier to handle.

Therefore, the adhesive of the present invention can be used to electrically connect liquid crystal display (LCD) panels to tape automated bonding (TAB), TAB to flexible circuit boards, LCD panels to IC chips, and IC chips to printed circuit boards only in the direction of pressure applied during connection.

The circuit board of the present invention can absorb stress generated in reliability tests, and there is no increase in connection resistance or delamination of the adhesive at the connection site after reliability testing, greatly improving connection reliability. Also, because the circuit board of the present invention can relieve stress at the chip and adhesive interface using adhesive film with a smaller thermal expansion coefficient on the chip side, when protruding electrodes are provided on the electrode pads of the chip, the separation of the protruding electrodes from the electrode pads in temperature cycle testing can be significantly reduced.

Brief Description of the Drawings

FIG. 1 is a cross-sectional view showing an example of the configuration of the electronic component device in the present invention.

FIG. 2 is a cross-sectional view showing an example of an electronic component connected to a mounting board.

Best Mode For Carrying Out the Invention

Example 1

First, 50 g of a phenoxy resin and 125 g of an acrylic rubber copolymerized with butyl acrylate (30 parts), ethyl acrylate (30 parts), acrylonitrile (30 parts) and glycidyl methacrylate (3 parts) (molecular weight: 850,000) were dissolved in 400 g of ethyl acetate to obtain a 30% solution.

Next, 325 g of liquid epoxy (epoxy equivalent: 185) containing a microcapsule-type latent curing agent was added to this solution, the contents were stirred, and 40 parts by weight of fused silica (average particle size: 0.5 μm) and 2% by volume of nickel particles (diameter: 3 μm) were dispersed per 100 parts by weight of adhesive resin composition to obtain a film coating solution.

The film coating solution was applied to a separator (silicone-treated polyethylene terephthalate film, thickness: 40 μm) with a roller coater and dried at 100°C for 10 minutes to form adhesive film (a) with a thickness of 45 μm. The modulus of elasticity at 40°C of the adhesive resin composition without the fused silica and nickel particles in adhesive film (a) was 800 MPa as measured by a dynamic viscoelasticity meter.

Next, the resulting adhesive film (a) was used to connect a chip (10 mm x 10 mm, thickness: 0.5 mm) with gold bumps (area: 80 μm x 80 μm, space: 30 μm, height: 15 μm, number of bumps: 288) to a Ni/Au-plated Cu circuit printed board as shown below.

First, adhesive film (a) (12 mm x 12 mm) was applied to a Ni/Au-plated Cu circuit printed board (electrode height: 20 μm, thickness: 0.8 mm) at 80°C and 10 kgf/cm^2, and the separator was peeled off and the bumps on the chip aligned with the Ni/Au-plated Cu circuit printed board (thickness: 0.8 mm). Next, the connection was established by applying heat and pressure from above to the chip under conditions of 180°C, 30 g/bump, and 20 seconds.

The maximum connection resistance after this connection was 6 mΩ per bump, the average was 2 mΩ, and the absolute resistance was over 10^8 Ω . These values remained unchanged after 1,000 cycles of thermal shock testing at -55 to 125°C, after 200 hours of PCT testing (121°C, 2 atm), and after 10 seconds of immersion in a solder bath at 260°C, indicating that the connection reliability was excellent.

Example 2

First, 50 g of a phenoxy resin and 175 g of an acrylic rubber copolymerized with butyl acrylate (40 parts), ethyl acrylate (30 parts), acetonitrile (30 parts) and glycidyl methacrylate (3 parts) (molecular weight: 850,000) were dissolved in 525 g of ethyl acetate to obtain a 30% solution.

Next, 275 g of liquid epoxy (epoxy equivalent: 185) containing a microcapsule-type latent curing agent was added to this solution, the contents were stirred, and 60 parts by weight of fused silica (average particle size: 0.5 μm) and 2% by volume of nickel particles (diameter: 5 μm) were dispersed per 100 parts by weight of adhesive resin composition to obtain a film coating solution.

The film coating solution was applied to a separator (silicone-treated polyethylene terephthalate film, thickness: 40 μm) with a roller coater and dried at 100°C for 10 minutes to form adhesive film (b) with a thickness of 45 μm. The modulus of elasticity at 40°C of the adhesive resin composition without the fused silica and nickel particles in adhesive film (b) was 400 MPa as measured by a dynamic viscoelasticity meter.

Next, the resulting adhesive film (b) was used to connect a chip (10 mm x 10 mm) with gold bumps (area: 80 μm x 80 μm, space: 30 μm, height: 15 μm, number of bumps: 288) to a Ni/Au-plated Cu circuit printed board (electrode height: 20 μm, thickness: 0.8 mm) as shown below.

First, adhesive film (b) (12 mm x 12 mm) was applied to the Ni/Au-plated Cu circuit printed board at 80°C and 10 kgf/cm^2, and the separator was peeled off and the bumps on the chip aligned with the Ni/Au-plated Cu circuit printed board. Next, the connection was established by applying heat and pressure from above to the chip under conditions of 170°C, 30 g/bump, and 20 seconds.

The maximum connection resistance after this connection was 18 mΩ per bump, the average was 8 mΩ, and the absolute resistance was over 10^8 Ω . These values remained unchanged after 1,000 cycles of thermal shock testing at -55 to 125°C, after 200 hours of PCT testing (121°C, 2 atm), and after 10 seconds of immersion in a solder bath at 260°C, indicating that the connection reliability was excellent.

Example 3

First, 50 g of a phenoxy resin and 100 g of an acrylic rubber copolymerized with butyl acrylate (40 parts), ethyl acrylate (30 parts), acetonitrile (30 parts) and glycidyl methacrylate (3 parts) (molecular weight: 850,000) were dissolved in 350 g of ethyl acetate to obtain a 30% solution.

Next, 350 g of liquid epoxy (epoxy equivalent: 185) containing a microcapsule-type latent curing agent was added to this solution, the contents were stirred, and 60 parts by weight of fused silica (average particle size: 0.5 μm) and 5% by volume of conductive particles consisting of an Au layer on the surface of a polystyrene core (diameter: 5 μm) were dispersed per 100 parts by weight of adhesive resin composition to obtain a film coating solution.

The film coating solution was applied to a separator (silicone-treated polyethylene terephthalate film, thickness: 40 μm) with a roller coater and dried at 100°C for 10 minutes to form adhesive film (c) with a thickness of 45 μm. The modulus of elasticity at 40°C of the adhesive resin composition without the fused silica and particles in adhesive film (c) was 1000 MPa as measured by a dynamic viscoelasticity meter.

Next, the resulting adhesive film (c) was used to connect a chip (10 mm x 10 mm, thickness: 0.5 mm) with gold bumps (area: 80 μm x 80 μm, space: 30 μm, height: 15 μm, number of bumps: 288) to a Ni/Au-plated Cu circuit printed board (electrode height: 20 μm, thickness: 0.8 mm) as shown below.

First, adhesive film (c) (12 mm x 12 mm) was applied to the Ni/Au-plated Cu circuit printed board at 80°C and 10 kgf/cm^2, and the separator was peeled off and the bumps on the chip aligned with the Ni/Au-plated Cu circuit printed board. Next, the connection was established by applying heat and pressure from above to the chip under conditions of 170°C, 30 g/bump, and 20 seconds.

The maximum connection resistance after this connection was 5 mΩ per bump, the average was 1.5 mΩ, and the absolute resistance was over 10^8 Ω . These values remained unchanged after 1,000 cycles of thermal shock testing at -55 to 125°C, after 200 hours of PCT testing (121°C, 2 atm), and after 10 seconds of immersion in a solder bath at 260°C, indicating that the connection reliability was excellent.

Example 4

First, 50 g of a phenoxy resin and 100 g of an acrylic rubber copolymerized with butyl acrylate (40 parts), ethyl acrylate (30 parts), acetonitrile (30 parts) and glycidyl methacrylate (3 parts) (molecular weight: 850,000) were dissolved in 350 g of ethyl acetate to obtain a 30% solution.

Next, 350 g of liquid epoxy (epoxy equivalent: 185) containing a microcapsule-type latent curing agent was added to this solution, the contents were stirred, and 40 parts by weight of fused silica (average particle size: 0.5 μm) and 5% by volume of conductive particles consisting of an Au layer on the surface of a polystyrene core (diameter: 5 μm) were dispersed per 100 parts by weight of adhesive resin composition to obtain a film coating solution.

The film coating solution was applied to a separator (silicone-treated polyethylene terephthalate film, thickness: 40 μm) with a roller coater and dried at 100°C for 10 minutes to form adhesive film (d) with a thickness of 45 μm. The modulus of elasticity at 40°C of the adhesive resin composition without the fused silica and particles in adhesive film (d) was 1000 MPa as measured by a dynamic viscoelasticity meter. The average coefficient of thermal expansion of adhesive film (d) at 110 to 130°C as measured by the TMA method was 111 ppm.

Next, the resulting adhesive film (d) was used to connect a chip (1.7 mm x 17 mm, thickness: 0.5 mm) with gold bumps (area: 50 μm x 50 μm, number of bumps: 362, space: 20 μm, height: 15 μm) to a yttrium tin oxide (ITO) circuit glass substrate (thickness: 1.1 mm) as shown below.

First, adhesive film (c) (12 mm x 12 mm) was applied to the ITO circuit glass substrate at 80°C and 10 kgf/cm^2, then the separator was peeled off and the bumps on the chip aligned with the ITO circuit glass substrate. Next, the connection was established by applying heat and pressure from above to the chip at 180°C for 20 seconds at 40 g/bump.

The maximum connection resistance after this connection was 150 mΩ per bump, the average was 80 mΩ, and the absolute resistance was over 10^8 Ω . These values remained unchanged after 1,000 cycles of thermal shock testing at -40 to 100°C and after 100 hours of PCT testing (105°C, 1.2 atm), indicating that the connection reliability was excellent.

Example 5

First, 50 g of a phenoxy resin and 125 g of an acrylic rubber copolymerized with butyl acrylate (40 parts), ethyl acrylate (30 parts), acetonitrile (30 parts) and glycidyl methacrylate (3 parts) (molecular weight: 850,000) were dissolved in 400 g of ethyl acetate to obtain a 30% solution.

Next, 325 g of liquid epoxy (epoxy equivalent: 185) containing a microcapsule-type latent curing agent was added to this solution, the contents were stirred, and 60 parts by weight of fused silica (average particle size: 0.5 μm) and 2% by volume of nickel particles (diameter: 5 μm) were dispersed per 100 parts by weight of adhesive resin composition to obtain a film coating solution.

The film coating solution was applied to a separator (silicone-treated polyethylene terephthalate film, thickness: 40 μm) with a roller coater and dried at 100°C for 10 minutes to form adhesive film (e) with a thickness of 45 μm. The modulus of elasticity at 40°C of the adhesive resin composition without the fused silica and particles in adhesive film (e) was 800 MPa as measured by a dynamic viscoelasticity meter.

Next, the resulting adhesive film (e) was used to connect a bumpless chip (10 mm x 10 mm, thickness: 0.5 mm) to a Ni/Au plated Cu printed circuit board with Ni/Au plated Cu bumps (diameter: 100 μm, space: 50 μm, height: 15 μm, number of bumps: 200) on the circuit as shown below.

The connection was established by affixing adhesive film (e) (12 mm x 12 mm) to a Ni/Au-plated Cu printed circuit board (electrode height: 20 μm, thickness: 0.8 mm) at 80°C and 10 kgf/cm^2, peeling off the separator, aligning Al pads on the chip with the Ni/Au plated Cu bumps on the Ni/Au-plated Cu-circuit printed circuit board (thickness: 0.8 mm), and applying heat and pressure from above to the chip at conditions of 180°C, 30 g/bump, and 20 seconds.

The maximum connection resistance after this connection was 8 mΩ per bump, the average was 4 mΩ, and the absolute resistance was over 10^8 Ω . These values remained unchanged after 1,000 cycles of thermal shock testing at -55 to 125°C, after 200 hours of PCT testing (121°C, 2 atm), and after 10 seconds of immersion in a solder bath at 260°C, indicating that the connection reliability was excellent.

Example 6

First, 50 g of a phenoxy resin and 125 g of an acrylic rubber copolymerized with butyl acrylate (40 parts), ethyl acrylate (30 parts), acetonitrile (30 parts) and glycidyl methacrylate (3 parts) (molecular weight: 850,000) were dissolved in 400 g of ethyl acetate to obtain a 30% solution.

Next, 325 g of liquid epoxy (epoxy equivalent: 185) containing a microcapsule-type latent curing agent was added to this solution, the contents were stirred, and 40 parts by weight of fused silica (average particle size: 0.5 μm) were dispersed per 100 parts by weight of adhesive resin composition to obtain a film coating solution.

The film coating solution was applied to a separator (silicone-treated polyethylene terephthalate film, thickness: 40 μm) with a roller coater and dried at 100°C for 10 minutes to form adhesive film (f) serving as the first adhesive layer (thickness: 25 μm). The modulus of elasticity at 40°C of the adhesive resin composition without the fused silica and particles in adhesive film (f) was 800 MPa as measured by a dynamic viscoelasticity meter.

Adhesive film (g) serving as the second adhesive layer (thickness: 25 μm) was formed in the same way as adhesive film (f), except that 2% by volume nickel particles (diameter: 3 μm) were dispersed instead of fused silica. The modulus of elasticity of the resulting adhesive film (g) at 40°C was 800 MPa.

Next, the resulting adhesive film (f) and adhesive film (g) were laminated to obtain laminated film-like adhesive (h), which was a composite film.

The resulting adhesive film (h) was used to connect a chip (10 mm x 10 mm, thickness: 0.5 mm) with gold bumps (area: 80 μm x 80 μm, space: 30 μm, height: 15 μm, number of bumps: 288) to a Ni/Au-plated Cu circuit printed board as shown below.

First, adhesive film (g) (the second adhesive layer) of the laminated film-like adhesive (h) (12 mm x 12 mm) was applied to the Ni/Au-plated Cu-circuit printed circuit board (electrode height: 20 μm, thickness: 0.8 mm) at 80°C and 10 kgf/cm^2, the separator was peeled off, the chip was placed facing the adhesive film (f) (first adhesive layer) side, and the bumps on the chip were aligned with the Ni/Au plated Cu-circuit printed circuit board (thickness: 0.8 mm). Next, the connection was established by applying heat and pressure from above to the chip under the conditions of 180°C, 50 g/bumps, and 20 seconds.

The maximum connection resistance after this connection was 6 mΩ per bump, the average was 2 mΩ, and the absolute resistance was over 10^8 Ω . These values remained unchanged after 1,000 cycles of thermal shock testing at -55 to 125°C, after 200 hours of PCT testing (121°C, 2 atm), and after 10 seconds of immersion in a solder bath at 260°C, indicating that the connection reliability was excellent.

Example 7

First, 50 g of a phenoxy resin and 175 g of an acrylic rubber copolymerized with butyl acrylate (40 parts), ethyl acrylate (30 parts), acetonitrile (30 parts) and glycidyl methacrylate (3 parts) (molecular weight: 850,000) were dissolved in 525 g of ethyl acetate to obtain a 30% solution.

Next, 275 g of liquid epoxy (epoxy equivalent: 185) containing a microcapsule-type latent curing agent was added to this solution, the contents were stirred, and 60 parts by weight of fused silica (average particle size: 1 μm) were dispersed per 100 parts by weight of adhesive resin composition to obtain a film coating solution.

The film coating solution was applied to a separator (silicone-treated polyethylene terephthalate film, thickness: 40 μm) with a roller coater and dried at 100°C for 10 minutes to form adhesive film (i) serving as the first adhesive layer (thickness: 20 μm.) The modulus of elasticity at 40°C of the adhesive resin composition without the fused silica in adhesive film (i) was 400 MPa as measured by a dynamic viscoelasticity meter.

Adhesive film (j) serving as the second adhesive layer (thickness: 20 μm) was formed in the same way as adhesive film (i), except that 2% by volume nickel particles (diameter: 5 μm) were dispersed instead of fused silica. The modulus of elasticity of the resulting adhesive film (j) at 40°C was 400 MPa.

Next, the resulting adhesive film (i) and adhesive film (j) were laminated to obtain laminated film-like adhesive (k), which was a composite film. This film-like adhesive (k) was used to connect a chip (10 mm x 10 mm, thickness: 0.5 mm) with gold bumps (area: 80 μm x 80 μm, space: 30 μm, height: 15 μm, number of bumps: 288) to a Ni/Au-plated Cu circuit printed board as shown below.

First, adhesive film (j) (the second adhesive layer) of the laminated film-like adhesive (k) (12 mm x 12 mm) was applied to the Ni/Au-plated Cu-circuit printed circuit board (electrode height: 20 μm, thickness: 0.8 mm) at 80°C and 10 kgf/cm^2, the separator was peeled off, the chip was placed facing the adhesive film (i) (first adhesive layer) side, and the bumps on the chip were aligned with the Ni/Au plated Cu-circuit printed circuit board (thickness: 0.8 mm). Next, the connection was established by applying heat and pressure from above to the chip under the conditions of 180°C, 50 g/bumps, and 20 seconds.

The maximum connection resistance after this connection was 18 mΩ per bump, the average was 8 mΩ, and the absolute resistance was over 10^8 Ω . These values remained unchanged after 1,000 cycles of thermal shock testing at -55 to 125°C, after 200 hours of PCT testing (121°C, 2 atm), and after 10 seconds of immersion in a solder bath at 260°C, indicating that the connection reliability was excellent.

Example 8

First, 50 g of a phenoxy resin and 100 g of an acrylic rubber copolymerized with butyl acrylate (40 parts), ethyl acrylate (30 parts), acetonitrile (30 parts) and glycidyl methacrylate (3 parts) (molecular weight: 850,000) were dissolved in 350 g of ethyl acetate to obtain a 30% solution.

Next, 350 g of liquid epoxy (epoxy equivalent: 185) containing a microcapsule-type latent curing agent was added to this solution, the contents were stirred, and 60 parts by weight of fused silica (average particle size: 0.5 μm) were dispersed per 100 parts by weight of adhesive resin composition to obtain a film coating solution.

The film coating solution was applied to a separator (silicone-treated polyethylene terephthalate film, thickness: 40 μm) with a roller coater and dried at 100°C for 10 minutes to form adhesive film (m) serving as the first adhesive layer (thickness: 25 μm). The modulus of elasticity at 40°C of the adhesive resin composition without the fused silica and particles in adhesive film (m) was 1000 MPa as measured by a dynamic viscoelasticity meter.

Adhesive film (n) (thickness: 25 μm) serving as the second adhesive layer was formed in the same way as adhesive film (m), except that 5% by volume conductive particles composed of an Au layer on the surface of a polystyrene core (diameter: 5 μm) were dispersed instead of fused silica. The modulus of elasticity of the resulting adhesive film (n) at 40°C was 1,000 MPa.

Next, the resulting adhesive film (m) and adhesive film (n) were laminated to obtain laminated film-like adhesive (p), which was a composite film. This film-like adhesive (p) was used to connect a chip (10 mm x 10 mm, thickness: 0.5 mm) with gold bumps (area: 80 μm x 80 μm, space: 30 μm, height: 15 μm, number of bumps: 288) to a Ni/Au-plated Cu circuit printed board as shown below.

First, adhesive film (n) (the second adhesive layer) of the laminated film-like adhesive (p) (12 mm x 12 mm) was applied to the Ni/Au-plated Cu-circuit printed circuit board (electrode height: 20 μm, thickness: 0.8 mm) at 80°C and 10 kgf/cm^2, the separator was peeled off, the chip was placed facing the adhesive film (m) (first adhesive layer) side, and the bumps on the chip were aligned with the Ni/Au plated Cu-circuit printed circuit board (thickness: 0.8 mm). Next, the connection was established by applying heat and pressure from above to the chip under the conditions of 180°C, 50 g/bumps, and 20 seconds.

The maximum connection resistance after this connection was 5 mΩ per bump, the average was 1.5 mΩ, and the absolute resistance was over 10^8 Ω . These values remained unchanged after 1,000 cycles of thermal shock testing at -55 to 125°C, after 200 hours of PCT testing (121°C, 2 atm), and after 10 seconds of immersion in a solder bath at 260°C, indicating that the connection reliability was excellent.

Example 9

First, 50 g of a phenoxy resin and 125 g of an acrylic rubber copolymerized with butyl acrylate (40 parts), ethyl acrylate (30 parts), acetonitrile (30 parts) and glycidyl methacrylate (3 parts) (molecular weight: 850,000) were dissolved in 400 g of ethyl acetate to obtain a 30% solution.

Next, 325 g of liquid epoxy (epoxy equivalent: 185) containing a microcapsule-type latent curing agent was added to this solution, the contents were stirred, and 60 parts by weight of fused silica (average particle size: 0.5 μm) were dispersed per 100 parts by weight of adhesive resin composition to obtain a film coating solution.

The film coating solution was applied to a separator (silicone-treated polyethylene terephthalate film, thickness: 25 μm) with a roller coater and dried at 100°C for 10 minutes to form adhesive film (q) serving as the first adhesive layer (thickness: 25 μm). The modulus of elasticity at 40°C of the adhesive resin composition without the fused silica and particles in adhesive film (q) was 800 MPa as measured by a dynamic viscoelasticity meter.

Adhesive film (r) (thickness: 25 μm) serving as the second adhesive layer was formed in the same way as adhesive film (q), except that 2% by volume nickel particles (diameter: 3 μm) were dispersed instead of fused silica. The modulus of elasticity of the resulting adhesive film (r) at 40°C was 800 MPa.

Next, the resulting adhesive film (q) and adhesive film (r) were laminated to obtain laminated film-like adhesive (s), which was a composite film.

Next, the resulting film-like adhesive (s) was used to connect a bumpless chip (10 mm x 10 mm, thickness: 0.5 mm, pad electrodes: Al, pad diameter: 120 μm) to a Ni/Au plated Cu-circuit printed circuit board with Ni/Au plated Cu bumps (diameter: 100 μm, space: 50 μm, height: 15 μm, number of bumps: 200) on the circuit as shown below.

The connection was established by affixing adhesive r (the second adhesive layer) of the film-like adhesive film (s) (12 mm x 12 mm) to a Ni/Au-plated Cu-circuit printed circuit board (electrode height: 20 μm, thickness: 0.8 mm) with the Ni/Au plated Cu bumps (diameter: 100 μm, space: 50 μm, height: 15 μm, number of bumps: 200) at 80°C and 10 kgf/cm^2, peeling off the separator, arranging the chip to face the adhesive film (q) (first adhesive layer) side, and aligning bumps on the chip with the Ni/Au plated Cu-circuit printed circuit board (thickness: 0.8 mm). Next, the connection was established by applying heat and pressure from above to the chip under conditions of 180°C, 50 g/bump, and 20 seconds.

The maximum connection resistance after this connection was 8 mΩ per bump, the average was 4 mΩ, and the absolute resistance was over 10^8 Ω . These values remained unchanged after 1,000 cycles of thermal shock testing at -55 to 125°C, after 200 hours of PCT testing (121°C, 2 atm), and after 10 seconds of immersion in a solder bath at 260°C, indicating that the connection reliability was excellent.

Example 10

First, 195 g of phenoxy resin and 130 g of multifunctional epoxy (epoxy equivalent: 212) were dissolved in 1,083 g of ethyl acetate to obtain a 30% solution.

Next, 325 g of liquid epoxy (epoxy equivalent: 185) containing a microcapsule-type latent curing agent was added to the solution, the contents were stirred, and 2% by volume of nickel particles (diameter: 5 μm) were dispersed to obtain a film coating solution.

The film coating solution was applied to a separator (silicone-treated polyethylene terephthalate film, thickness: 40 μm) with a roller coater and dried at 100°C for 10 minutes to form adhesive film (t) serving as the third adhesive layer (thickness: 25 μm). After curing, the thermal expansion coefficient of the adhesive film (t) from 30 to 100°C was 45 ppm, the glass transition temperature was 150°C, and the modulus of elasticity at 40°C was 2,600 MPa.

Also, 50 g of a phenoxy resin and 100 g of an acrylic rubber copolymerized with butyl acrylate (40 parts), ethyl acrylate (20 parts), acetonitrile (30 parts) and glycidyl methacrylate (3 parts) (molecular weight: 850,000) were dissolved in 500 g of ethyl acetate to obtain a 30% solution.

Next, 350 g of liquid epoxy (epoxy equivalent: 185) containing a microcapsule-type latent curing agent was added to the solution, the contents were stirred, and 2% by volume of nickel particles (diameter: 5 μm) were dispersed to obtain a film coating solution.

The film coating solution was applied to a separator (silicone-treated polyethylene terephthalate film, thickness: 40 μm) with a roller coater and dried at 100°C for 10 minutes to form adhesive film (u) serving as the fourth adhesive layer (thickness: 25 μm). After curing, the thermal expansion coefficient of the adhesive film (u) from 30 to 100°C was 70 ppm, the glass transition temperature was 125°C, and the modulus of elasticity at 40°C was 1,000 MPa.

Next, adhesive film (t) and the adhesive film (u) were laminated to form a laminated film-like adhesive (v), which was a composite film (thickness: 50 μm).

The resulting laminate film-like adhesive (v) was used to connect a chip (size: 10 x 10 mm, thickness: 0.55 mm) with gold bumps (height: 30 μm, number of bumps: 184) to a Ni/Au plated Cu circuit printed board (electrode height: 20 μm, thickness: 0.8 mm) as shown below.

First, the laminated film-like adhesive (v) was temporarily connected to the Ni/Au plated Cu-circuit printed circuit board at 60°C and 0.5 MPa, with the adhesive film (u) (fourth adhesive layer) side of the laminated film-like adhesive (v) (size: 12 x 12 mm) facing the printed circuit board. After the temporary connection had been established, the chip bumps were aligned with the Ni/Au plated Cu-circuit printed circuit board, the chip was placed on the laminated film-like adhesive (v), and a connection was established by applying heat and pressure from above to the chip at 180°C for 20 seconds at 50 g/bump.

The maximum connection resistance after this connection was 10 mΩ per bump, the average was 2 mΩ, and the absolute resistance was over 10^8 Ω . These values showed good connection reliability during 1,000 cycles of thermal shock testing from -55 to 125°C and continuous (in situ) resistance measurements during PCT testing at 110°C and 85% RH for 500 hours.

Example 11

First, 195 g of phenoxy resin and 130 g of multifunctional epoxy (epoxy equivalent: 212) were dissolved in 1,083 g of ethyl acetate to obtain a 30% solution.

Next, 325 g of liquid epoxy (epoxy equivalent: 185) containing a microcapsule-type latent curing agent was added to the solution, the contents were stirred, and 20 parts by weight of fused silica (average particle size: 0.5 μm) and 2% by volume of nickel particles (diameter: 5 μm) were dispersed per 100 parts by weight of the resin composition to obtain a film coating solution.

The film coating solution was applied to a separator (silicone-treated polyethylene terephthalate film, thickness: 40 μm) with a roller coater and dried at 100°C for 10 minutes to form adhesive film (w) serving as the third adhesive layer (thickness: 25 μm). After curing, the thermal expansion coefficient of the adhesive film (w) from 30 to 100°C was 38 ppm, the glass transition temperature was 153°C, and the modulus of elasticity at 40°C was 3,000 MPa.

Also, 50 g of a phenoxy resin and 100 g of an acrylic rubber copolymerized with butyl acrylate (40 parts), ethyl acrylate (20 parts), acetonitrile (30 parts) and glycidyl methacrylate (3 parts) (molecular weight: 850,000) were dissolved in 500 g of ethyl acetate to obtain a 30% solution.

Next, 350 g of liquid epoxy (epoxy equivalent: 185) containing a microcapsule-type latent curing agent was added to the solution, the contents were stirred, and 20 parts by weight of fused silica (average particle size: 0.5 μm) and 2% by volume of nickel particles (diameter: 5 μm) were dispersed per 100 parts by weight of the resin composition to obtain a film coating solution.

The film coating solution was applied to a separator (silicone-treated polyethylene terephthalate film, thickness: 40 μm) with a roller coater and dried at 100°C for 10 minutes to form adhesive film (x) serving as the fourth adhesive layer (thickness: 25 μm). After curing, the thermal expansion coefficient of the adhesive film (x) from 30 to 100°C was 60 ppm, the glass transition temperature was 127°C, and the modulus of elasticity at 40°C was 1,400 MPa.

Next, adhesive film (w) and the adhesive film (x) were laminated to form a laminated film-like adhesive (y), which was a composite film (thickness: 50 μm).

The resulting laminate film-like adhesive (y) was used to connect a chip (size: 10 x 10 mm, thickness: 0.55 mm) with gold bumps (height: 30 μm, number of bumps: 184) to a Ni/Au plated Cu circuit printed board (electrode height: 20 μm, thickness: 0.8 mm) as shown below.

First, the laminated film-like adhesive (y) was temporarily connected to the Ni/Au plated Cu-circuit printed circuit board at 60°C and 0.5 MPa, with the adhesive film (x) (fourth adhesive layer) side of the laminated film-like adhesive (y) (size: 12 x 12 mm) facing the printed circuit board. After the temporary connection had been established, the chip bumps were aligned with the Ni/Au plated Cu-circuit printed circuit board, the chip was placed on the laminated film-like adhesive (y), and a connection was established by applying heat and pressure from above to the chip at 180°C for 20 seconds at 50 g/bump.

The maximum connection resistance after this connection was 10 mΩ per bump, the average was 2 mΩ, and the absolute resistance was over 10^8 Ω . These values showed good connection reliability during 1,000 cycles of thermal shock testing from -55 to 125°C and continuous (in situ) resistance measurements during PCT testing at 110°C and 85% RH for 500 hours.

Comparative Example 1

The laminated film-like adhesive (v) obtained in Example 10 was used to establish a connection between a chip (size: 10 x 10 mm, thickness: 0.55 mm) with gold bumps (height: 30 μm, number of bumps: 184) and a Ni/Au plated Cu circuit printed board (electrode height: 20 μm, thickness: 0.8 mm) in the same manner as in Example 10. However, in this comparative example, the adhesive film (t) (third adhesive layer) side of the laminated film-like adhesive (v) (size: 12 x 12 mm) was on the printed board side.

The maximum connection resistance after this connection was 10 mΩ per bump, the average was 2 mΩ, and the absolute resistance was over 10^8 Ω . These values indicated poor electrical connectivity after 500 cycles of thermal shock testing at -55 to 125°C and after 300 hours of PCT testing at 110°C and 85% RH.

Comparative Example 2

First, 195 g of phenoxy resin and 130 g of multifunctional epoxy (epoxy equivalent: 212) were dissolved in 1,083 g of ethyl acetate to obtain a 30% solution.

Next, 325 g of liquid epoxy (epoxy equivalent: 185) containing a microcapsule-type latent curing agent was added to the solution, the contents were stirred, and 2% by volume of nickel particles (diameter: 5 μm) were dispersed to obtain a film coating solution.

The film coating solution was applied to a separator (silicone-treated polyethylene terephthalate film, thickness: 40 μm) with a roller coater and dried at 100°C for 10 minutes to form adhesive film (z) with a thickness of 50 μm. After curing, the coefficient of thermal expansion of adhesive film (z) from 30 to 100°C was 45 ppm, the glass transition temperature was 150°C, and the modulus of elasticity at 40°C was 2,600 MPa.

The resulting adhesive film (z) alone was then used to connect a chip (size: 10 x 10 mm, thickness: 0.55 mm) with gold bumps (height: 30 μm, number of bumps: 184) to a Ni/Au plated Cu-circuit printed circuit board (electrode height: 20 μm, thickness: 0.8 mm) in the manner shown below.

First, adhesive film (z) was temporarily connected to the Ni/Au plated Cu-circuit printed circuit board at 60°C and 0.5 MPa. After the temporary connection had been established, the chip bumps were aligned with the Ni/Au plated Cu-circuit printed circuit board, the chip was placed on adhesive film (z), and heat and pressure were applied from above to the chip at 180°C for 20 seconds at 50 g/bump to complete the connection.

The maximum connection resistance after this connection was 10 mΩ per bump, the average was 3 mΩ, and the absolute resistance was over 10^8 Ω . These values indicated poor electrical connectivity after 300 cycles of thermal shock testing and after 10 seconds of immersion in a solder bath at 260°C. Cross-sectional observation of the connection sites revealed that the adhesive film interface delaminated in some of the non-conductive areas.

Comparative Example 3

First, 50 g of a phenoxy resin and 100 g of an acrylic rubber copolymerized with butyl acrylate (40 parts), ethyl acrylate (20 parts), acetonitrile (30 parts) and glycidyl methacrylate (3 parts) (molecular weight: 850,000) were dissolved in 500 g of ethyl acetate to obtain a 30% solution.

Next, 350 g of liquid epoxy (epoxy equivalent: 185) containing a microcapsule-type latent curing agent was added to the solution, the contents were stirred, and 2% by volume of nickel particles (diameter: 5 μm) were dispersed to obtain a film coating solution.

The film coating solution was applied to a separator (silicone-treated polyethylene terephthalate film, thickness: 40 μm) with a roller coater and dried at 100°C for 10 minutes to form adhesive film (α) with a thickness of 25 μm. After curing, the coefficient of thermal expansion of adhesive film (α) from 30 to 100°C was 60 ppm, the glass transition temperature was 125°C, and the modulus of elasticity at 40°C was 1,000 MPa.

The resulting adhesive film (α) alone was then used to connect a chip (size: 10 x 10 mm, thickness: 0.55 mm) with gold bumps (height: 30 μm, number of bumps: 184) to a Ni/Au plated Cu-circuit printed circuit board (electrode height: 20 μm, thickness: 0.8 mm) in the manner shown below.

First, adhesive film (α) was temporarily connected to the Ni/Au plated Cu-circuit printed circuit board at 60°C and 0.5 MPa. After the temporary connection had been established, the chip bumps were aligned with the Ni/Au plated Cu-circuit printed circuit board, the chip was placed on adhesive film (α), and heat and pressure were applied from above to the chip at 180°C for 20 seconds at 50 g/bump to complete the connection.

The maximum connection resistance after this connection was 10 mΩ per bump, the average was 2 mΩ, and the absolute resistance was over 10^8 Ω . These values indicated poor electrical connectivity after 30 cycles of thermal shock testing at -55 to 125°C and during high temperature thermal shock testing.

Industrial Applicability

As described above, the present invention is able to produce a circuit board with significantly improved connection reliability without increased connection resistance or delamination of the adhesive at the connection site.

Claims

1. An adhesive for connecting circuit components to be interposed between opposing circuit electrodes to electrically connect the electrodes in the direction of pressure by applying pressure to the opposing circuit electrodes, wherein the adhesive comprises an adhesive resin composition and inorganic filler, in an amount from 10 to 200 parts by weight of the inorganic filler per 100 parts by weight of the adhesive resin composition.

2. An adhesive for connecting circuit components to be interposed between opposing circuit electrodes to electrically connect the electrodes in the direction of pressure by applying pressure to the opposing circuit electrodes, wherein the adhesive comprises an adhesive resin composition and inorganic filler, and has a multilayer configuration provided with a first adhesive layer containing 10 to 200 parts by weight of the inorganic filler per 100 parts by weight of the adhesive resin composition, and a second adhesive layer composed primary of the adhesive resin composition.

3. An adhesive for connecting circuit components to be interposed between opposing circuit electrodes to electrically connect the electrodes in the direction of pressure by applying pressure to the opposing circuit electrodes, wherein the adhesive comprises an adhesive resin composition and inorganic filler, and has a multilayer configuration provided with a first adhesive layer containing 10 to 200 parts by weight of the inorganic filler per 100 parts by weight of the adhesive resin composition,

and a second adhesive layer composed of the adhesive resin composition and having a modulus of elasticity at 40°C after curing of 100 to 2000 MPa.

4. An adhesive for connecting circuit components to be interposed between opposing circuit electrodes to electrically connect the electrodes in the direction of pressure by applying pressure to the opposing circuit electrodes, wherein the adhesive comprises an adhesive resin composition and inorganic filler, and has an average coefficient of thermal expansion at 110 to 130°C after curing of the adhesive of 200 ppm/°C or less.

5. The adhesive for connecting circuit components according to claim 4, wherein the average coefficient of thermal expansion of the adhesive at 110 to 130°C after curing is from 30 to 200 ppm/°C.

6. An adhesive for connecting circuit components to be interposed between opposing circuit electrodes to electrically connect the electrodes in the direction of pressure by applying pressure to the opposing circuit electrodes, wherein the adhesive has a multilayer configuration provided with a third adhesive layer and a fourth adhesive layer having different physical values from each other.

7. The adhesive for connecting circuit components according to claim 6, wherein the modulus of elasticity of the first adhesive layer after curing is greater than the modulus of elasticity of the second adhesive layer after curing.

8. The adhesive for connecting circuit components according to claim 7, wherein the modulus of elasticity of the fourth adhesive layer at 40°C after curing is from 100 to 2000 MPa.

9. The adhesive for connecting circuit components according to claim 6, wherein the coefficient of thermal expansion of the third adhesive layer is smaller the coefficient of thermal expansion of the fourth adhesive layer.

10. The adhesive for connecting circuit components according to claim 9, wherein the thermal expansion coefficient of the third adhesive layer from 30 to 100°C is from 20 to 70 ppm/°C.

11. The adhesive for connecting circuit components according to claim 6, wherein the glass transition temperature of the third adhesive layer is higher than the glass transition temperature of the fourth adhesive layer.

12. The adhesive for connecting circuit components according to claim 11, wherein the glass transition temperature of the third adhesive layer is 120°C or higher.

13. The adhesive for connecting circuit components according to claim 7, 9, or 11, wherein at least one of the third and fourth adhesive layers contains an adhesive resin composition and an inorganic filler material in an amount of 10 to 200 parts by weight per 100 parts by weight of the adhesive resin composition.

14. The adhesive for connecting circuit components according to any of claims 1, 2, 3, 4, or 13, wherein the average particle size of the inorganic filler is 3 μm or less.

15. The adhesive for connecting circuit components according to any of claims 1 to 14, wherein the adhesive contains 0.1 to 30 parts by volume of conductive particles per 100 parts by volume of the adhesive resin composition.

16. The adhesive for connecting circuit components according to any of claims 1, 2, 3, 4, 13, or 14, wherein the adhesive contains 0.1 to 30 parts by volume of conductive particles with a larger average particle diameter than the average particle diameter of the inorganic filler per 100 parts by volume of the adhesive resin composition.

17. The adhesive for connecting circuit components according to any of claims 1 to 16, wherein the modulus of elasticity of the adhesive resin composition at 40°C after curing is from 30 to 2000 MPa.

18. A film-like adhesive for connecting circuit components according to any of claims 1 to 17, wherein the adhesive resin composition contains an epoxy resin and a latent curing agent.

19. The adhesive for connecting circuit components according to any of claims 1 to 18, wherein the adhesive composition contains an epoxy resin, an acrylic rubber, and a latent curing agent.

20. The adhesive for connecting circuit components according to claim 19, wherein the acrylic rubber contains a glycidyl ether group in the molecule.

21. The adhesive for connecting circuit components according to any of claims 1 to 20, wherein the shape is film like.

22. A circuit board obtained by arranging a first circuit component with a first connection terminal and a second circuit component with a second connection terminal with the first connection terminal and second connection terminal opposing each other, interposing an adhesive between the first connection terminal and the second connection terminal opposing each other, and applying pressure to electrically connect the first connection terminal and the second connection terminal opposing each other, wherein the adhesive is the adhesive for connecting circuit components according to any of claims 1 to 21.

23. The circuit board according to claim 22, wherein the first circuit component is an inorganic insulating substrate and the second circuit component is an organic insulating substrate, the adhesive is the adhesive for connecting circuit components according to claim 2 or 3, and at least one of the first adhesive layers is bonded on the first circuit component side.

24. The circuit board according to claim 22, wherein the first circuit component is an inorganic insulating substrate and the second circuit component is an organic insulating substrate, the adhesive is the adhesive for connecting circuit components according to any of claims 7 or 13,

and at least one of the third adhesive layers is bonded on the first circuit component side.

25. The circuit board according to claim 23 or 24, wherein the first circuit component is a semiconductor chip.

26. A method for manufacturing a circuit board, the method comprising the steps of:
arranging a first circuit component with a first connection terminal composed of an inorganic insulating substrate and a second circuit component with a second connection terminal composed of an organic insulating substrate with the first connection terminal and second connection terminal opposing each other;
interposing the adhesive for connecting circuit components according to claim 2 or 3 between the first connection terminal and the second connection terminal opposing each other so that the first adhesive layer is on the first circuit component side; and
applying pressure to electrically connect the first second connection terminal and the second connection terminal opposing each other.

27. A method for manufacturing a circuit board, the method comprising the steps of:
arranging a first circuit component with a first connection terminal composed of an inorganic insulating substrate and a second circuit component with a second connection terminal composed of an organic insulating substrate with the first connection terminal and second connection terminal opposing each other;
interposing the adhesive for connecting circuit components according to any of claims 7 to 13 between the first connection terminal and the second connection terminal opposing each other

so that the third adhesive layer is on the first circuit component side; and

applying pressure to electrically connect the first connection terminal and the second connection terminal opposing each other.

1/1

FIG. 1

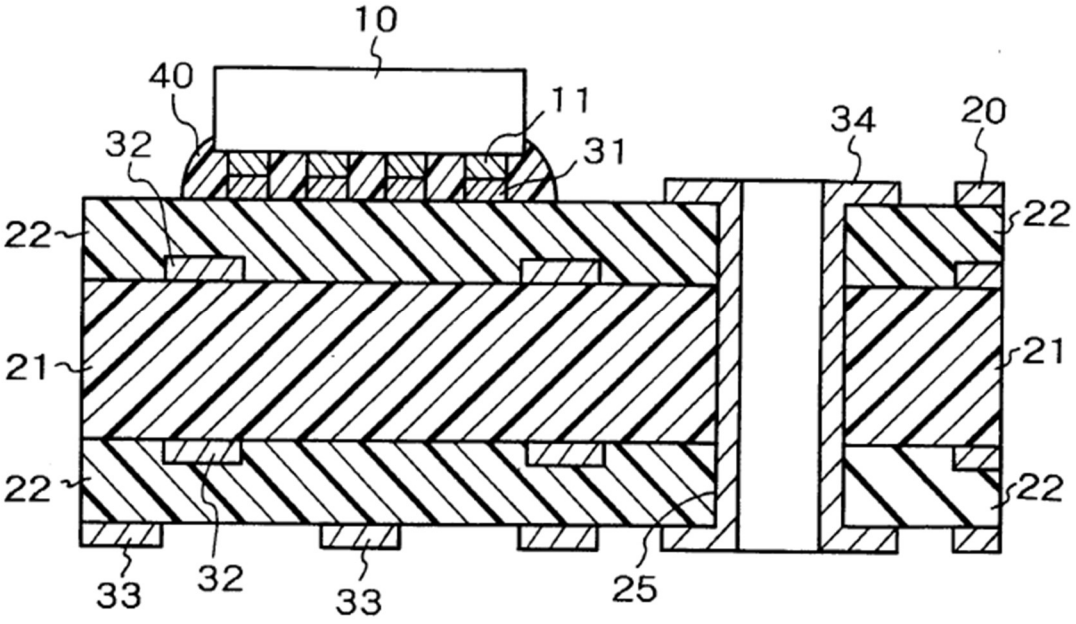
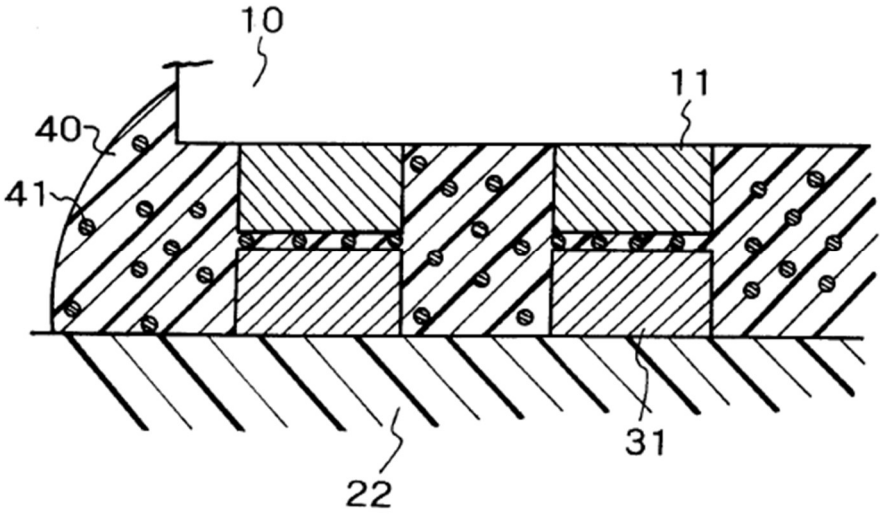
FIG. 2