IN THE UNITED STATES PATENT AND TRADEMARK OFFICE

In re Patent of:	Douglas et al.	
U.S. Patent No.:	11,167,464	Attorney Docket No.: 56224-0011IP1
Issue Date:	November 9, 2021	
App. Serial No.:	16/796,122	
Filing Date:	February 20, 2020	
Title:	TAGGED BUILD MATERIAL FOR THREE-DIMENSIONAL PRINTING	

DECLARATION OF DR. MICHAEL HICKNER

Shenzhen Tuozhu 1003

TABLE OF CONTENTS

I. INTRODUCTION 8
II. QUALIFICATIONS 8
III. LEGAL PRINCIPLES 10
A. Claim Interpretation 11
B. Anticipation 11
C. Obviousness 11
IV. LEVEL OF ORDINARY SKILL IN THE ART 13
V. MATERIALS CONSIDERED AND RELIED UPON 15
VI. OVERVIEW OF THE ’464 PATENT 17
A. Description 17
B. Effective Priority Date of the Claims of the ’464 Patent 19
VII. OVERVIEW OF CONCLUSIONS FORMED 24
VIII. OVERVIEW OF THE CITED REFERENCES 25
A. Dahlin 25
B. Menchik 27
C. Loughran 29
D. Toshiki 32
IX. APPLICATION OF THE CITED REFERENCES TO THE CHALLENGED CLAIMS 34
A. GROUND 1A— Claims 1, 4, 5, 11-17 are obvious over Dahlin and Menchik 34
1. Dahlin-Menchik Combination 34
2. Claim Element Analysis 38
B. GROUND 1B—Claims 2, 3, 6, 10, 18, and 19 are obvious over Dahlin, Menchik, and Loughran 63
1. Dahlin-Menchik-Loughran Combination 63
2. Claim Element Analysis 66
C. GROUND 2—Claims 1-6, 10-15, and 17-19 are obvious over Loughran in view of Toshiki 71

1. Loughran-Toshiki Combination 71
2. Claim Element Analysis 74
X. ADDITIONAL REMARKS 102

LISTING OF CHALLENGED CLAIMS

Claim Element	Language
1[p]	A method, comprising:
1[a]	reading data from a tag included on a supply of a build material using a tag sensor in communication with a controller of a three-dimensional printer, the data including at least one property of the build material;
1[b]	determining an operational parameter of a fabrication process using the three-dimensional printer based upon the data, the operational parameter including at least one of a build platform temperature, a build volume temperature, an infill requirement, a rafting requirement, a support structure requirement, and a cooling requirement;
1[c]	performing a diagnostic test to determine whether the operational parameter is suitable for the three-dimensional printer; and
1[d]	when the operational parameter is suitable for the three-dimensional printer according to the diagnostic test, controlling operation of the three-dimensional printer during the fabrication process with the controller according to the operational parameter to fabricate an object with the three-dimensional printer.
2	The method of claim 1, wherein the tag includes at least one of a radio frequency identification (RFID) tag, an optically-identifiable tag, a magnetically-identifiable tag, and a mechanical feature of the supply.
3	The method of claim 1, wherein the tag sensor includes at least one of a radio frequency identification (RFID) reader, an optical scanner, a magnetic reader, and a contact point sensor.

Claim Element	Language
4	The method of claim 1, wherein the data includes at least one of a material identification number, a build material type, a build material diameter, an extruder temperature requirement, a build material melting temperature, a build material color, a build material color lot number, a cost per unit of build material, a build material density, a build material tensile strength, a build material viscosity, a build material recycle code, and a build material expiration date.
5	The method of claim 1, wherein the supply includes at least one of a cartridge, a spool, a filament, a number of pellets, and a liquid.
6	The method of claim 1, wherein the tag includes a radio frequency identification (RFID) tag, and the RFID tag is at least one of a passive RFID tag and an active RFID tag.
10	The method of claim 1, wherein the operational parameter is based upon a build material identification number contained in the data.
11	The method of claim 1, wherein the operational parameter further includes at least one of an extruder temperature and a feed rate.
12[p]	A system, comprising:
12[a]	a three-dimensional printer;
12[b]	a coupling adapted to receive a supply of a build material;
12[c]	a tag sensor communicatively associated with the three-dimensional printer, the tag sensor configured to read data from a data tag associated with the supply of the build material, the data including at least one property of the build material;

Claim Element	Language
12[d]	a processor configured to determine an operational parameter of a fabrication process using the three-dimensional printer based upon the data and to perform a diagnostic test to determine whether the operational parameter is suitable for the three-dimensional printer, the operational parameter including at least one of a build platform temperature, a build volume temperature, an infill requirement, a rafting requirement, a support structure requirement, and a cooling requirement; and
12[e]	a controller for the three-dimensional printer, the controller configured to, when the operational parameter is suitable for the three-dimensional printer according to the diagnostic test, control operation of the three-dimensional printer during the fabrication process according to the operational parameter to fabricate an object with the three-dimensional printer.
13	The system of claim 12, further comprising a container holding the supply of the build material, wherein the container is configured to connect to the coupling, and wherein the container includes the data tag.
14	The system of claim 13, wherein the container includes at least one of a cartridge and a spool.
15	The system of claim 12, wherein the build material includes at least one of a filament, a number of pellets, and a liquid.
16	The system of claim 12, wherein the processor is included on a remote network resource.
17	The system of claim 12, wherein the processor is included on one or more of the controller and the three-dimensional printer.
18	The system of claim 12, wherein the tag sensor includes at least one of a radio frequency identification (RFID) reader, an optical scanner, a magnetic reader, and a contact point sensor.
19[p]	A method, comprising:

Claim Element	Language
19[a]	reading first data from a tag included on a supply of a build material using a tag sensor associated with a three-dimensional printer, the first data related to the build material;
19[b]	retrieving second data from a data store, the second data including additional data related to the build material;
19[c]	combining the first data and the second data;
19[d]	determining an operational parameter to configure the three-dimensional printer for a fabrication process using the build material based upon the combination of the first data and the second data;
19[e]	performing a diagnostic test to determine whether the operational parameter is suitable for the three-dimensional printer; and
19[f]	when the operational parameter is suitable for the three-dimensional printer according to the diagnostic test, controlling operation of the three-dimensional printer during the fabrication process according to the operational parameter to fabricate an object with the three-dimensional printer.

I, Michael Hickner, Ph.D., declares as follows:

I. INTRODUCTION

1. I have been retained as a technical expert by counsel on behalf of Shenzhen Tuozhu Technology Co., Ltd. ("Shenzhen Tuozhu" or "Petitioner"). I understand that Shenzhen Tuozhu is requesting that the Patent Trial and Appeal Board institute an *inter partes* review ("IPR") proceeding with respect to U.S. Patent No. 11,167,464 ("the '464 patent") (EX1001).

2. I have been asked to provide my independent analysis of the '464 patent in light of certain prior art publications, and I have done so based on my personal knowledge and experience.

3. I am not, and never have been, an employee of Shenzhen Tuozhu. I received no compensation for this Declaration beyond my normal hourly compensation based on my time actually spent analyzing the '464 patent, the prior art publications cited below, and various issues related thereto. I will not receive any added compensation based on the outcome of any IPR or other proceeding involving the '464 patent.

II. QUALIFICATIONS

4. In formulating my opinions, I have relied on my knowledge, training, and experience in the relevant field. My education and experience are described more fully in the attached curriculum vitae (Appendix A). For ease of reference, I

have highlighted certain information below.

5. I have B.S., M.Eng., and Ph.D. degrees in Chemical Engineering. I began my chemical engineering education in 1994 and completed my Ph.D. in 2003 with an emphasis in polymer chemistry and polymer science.

6. Since 2003, I have been a researcher and professor in chemical engineering and materials science disciplines working for a number of organizations on polymers research including, specifically, polymers in the context of 3D printing technology.

7. I have taught college-level courses in chemistry, polymers, and materials science. Specifically related to this case regarding the ’464 patent and additive manufacturing, I taught a graduate-level additive manufacturing course titled “Additive Manufacturing of Polymers and Composites” at Penn State University from 2018 to 2022. This course was part of the Additive Manufacturing and Design (AMD) graduate program that was started during my tenure at Penn State. The AMD graduate program covered all aspects of 3D printing—including how various build materials behave during a process to print a 3D part and support structure using multiple materials. In this course, and in my own research in 3D printing, I have used a wide range of 3D printing machines.

8. Similar teaching activities are planned at Michigan State University as I develop an additive manufacturing research program in my new role as an endowed

professor.

9. I have published a number of peer-reviewed journal papers that specifically address various aspects of additive manufacturing including aspects relating to printing equipment, printing strategies, and materials. For example, in papers that address extrusion 3D printing of silicones, we used different materials for the support structure and 3D part that helped with removal of 3D part from the support structure after printing.

10. Since 2013, I have been the principal supervisor for students pursuing advanced degrees in additive manufacturing and been a committee member on graduate committees in additive manufacturing topics.

11. In the course of my research and teaching at the university-level, I have worked with a wide range of 3D printers since 2012. I have purchased over twenty 3D printers for my research group. I have purchased more than ten 3D printers that can deposit more than one material to build 3D parts and/or support structures. I have printed a wide variety of materials in these printers, from ABS to composite polyimides.

III. LEGAL PRINCIPLES

12. In forming my analysis and conclusions expressed in this Declaration, I have applied the legal principles described in the following paragraphs, which were provided to me by counsel for the Petitioner.

A. Claim Interpretation

13. I understand that, for purposes of my analysis in this *inter partes* review proceeding, the terms appearing in the patent claims should be interpreted according to their "ordinary and customary meaning." In determining the ordinary and customary meaning, I understand that the words of a claim are first given their plain meaning that those words would have had to a person of ordinary skill in the art at the time of the alleged invention. I also understand that the structure of the claims, the specification, and file history may be used to better construe a claim. Moreover, I understand that even treatises and dictionaries may be used, albeit under limited circumstances, to determine the meaning attributed by a person of ordinary skill in the art to a claim term.

B. Anticipation

14. I have been informed that a patent claim is unpatentable as anticipated under 35 U.S.C. § 102 if each and every element of a claim is found either explicitly or inherently in a single prior art reference. Under the principles of inherency, if the prior art necessarily functions in accordance with, or necessarily includes the claimed elements, it anticipates.

C. Obviousness

15. I have been informed that a patent claim is invalid as "obvious" in light of one or more prior art references if it would have been obvious to a person of

ordinary skill in the art at the time of the alleged invention ("POSITA"), taking into account (1) the scope and content of the prior art, (2) the differences between the prior art and the claims, (3) the level of ordinary skill in the art, and (4) any so called "secondary considerations" of non-obviousness (e.g., evidence of "long felt need" for the claimed invention, commercial success attributable to the claimed invention, unexpected results of the claimed invention, and "copying" of the claimed invention by others).

16. While I do not know the exact date that the alleged invention of the '464 patent was made, I do know that the '464 patent is not entitled to its provisional application filing date and, as such, the earliest effective filing date is October 28, 2013. For purposes of my obviousness analysis in the Grounds below, and because I know of no indication from the patent owner or others to the contrary, I have applied a date of October 28, 2013 as the date of the alleged invention, although my opinions expressed below would hold true even if the date of the alleged invention were earlier, such as any time in the earlier 2010s.

17. I have been informed that a claim can be obvious in light of a single prior art reference or multiple prior art references. To be obvious in light of a single prior art reference or multiple prior art references, there must be a reason that would have prompted a POSITA to modify or supplement the single prior art reference, or to combine two or more references, in a manner that provides the elements of the

claimed invention. This reason may come from a teaching, suggestion, or motivation to combine, or may come from the reference(s) themselves, the knowledge or "common sense" of a POSITA, or from the nature of the problem to be solved, and this reason may be explicit or implicit from the prior art as a whole. I have been informed that, under the law, the combination of familiar elements according to known methods is likely to be obvious when it does no more than yield predictable results. I also understand it is improper to rely on hindsight in making the obviousness determination.

18. I understand that an obviousness determination also requires that a POSITA would have had a reasonable expectation of success. This concept has been explained to me as relating to the relative likelihood or predictability—from the perspective of a POSITA—of successfully modifying the prior art in a manner that would meet the claimed limitations of the patent being challenged (here the '464 patent). I understand that the expectation of success need only be "reasonable" and, thus, does not require the absolute certainty gleaned from physically creating the proposed prior art modification.

IV. LEVEL OF ORDINARY SKILL IN THE ART

19. In rendering the opinions set forth in this declaration, I was asked to consider the patent claims and the prior art through the eyes of a person of ordinary skill in the art as of the effective filing date of the '464 patent ("POSITA"), which I

have concluded is October 28, 2013 for the reasons that I address in detail above (§III.C). I understand that the factors considered in determining the ordinary level of skill in a field of art include the level of education and experience of persons working in the field; the types of problems encountered in the field; the teachings of the prior art; and the sophistication of the technology at the time of the alleged invention. I understand that a POSITA is not a specific real individual, but rather is a hypothetical individual having the qualities reflected by the factors above. I understand that a POSITA also would have knowledge from the teachings of the prior art, including the art cited below.

20. Taking these factors into consideration, on or before October 28, 2013, a POSITA relating to the technology of the ’464 patent would have had (1) at least a bachelor’s degree in Mechanical Engineering, Computer Engineering, Chemical Engineering, Materials Science, or a related field, and (2) at least two years of research or industry experience in 3D printing or materials used for 3D printing. Additional experience could substitute for a formal degree or formal training (and vice versa).

21. By October 28, 2013, my education and research experience was at least that of a POSITA. I am qualified to provide opinions concerning what a POSITA would have known and understood at that time, and my analysis and conclusions herein are from the perspective of a POSITA as of that date.

V. MATERIALS CONSIDERED AND RELIED UPON

22. In forming my opinions and reaching the conclusions described in this declaration, I have relied on the documents and materials cited herein as well as those identified in this declaration, including the ’464 patent, the prosecution history of the ’464 patent, and prior art references cited herein. These materials comprise patents, related documents, and printed publications. Each of these materials is a type of document that experts in my field would have reasonably relied upon when forming their opinions. I have also relied on my education, training, research, knowledge, and personal and professional experience in the relevant technologies and systems that were already in use prior to, and within the timeframe of the earliest effective filing date of the ’464 patent (October 28, 2013).

23. Accordingly, as part of my independent analysis of the ’464 Patent, I have analyzed the following publications and materials:

Exhibit	Description
EX1001	U.S. Patent No. 11,167,464 to Douglas et al. (“the ’464 patent”)
EX1002	Excerpts from the Prosecution History of the ’464 patent
EX1004	U.S. Patent Application Publication No. 2006/0091199 to Loughran (“Loughran”)
EX1007	Kaur et al., RFID Technology Principles, Advantages, Limitations & Its Applications, International Journal of Computer and Electrical Engineering, Vol. 3, No. 1, February 2011 (“Kaur”)

Exhibit	Description
EX1009	U.S. Patent Application Publication No. 2006/0127153 to Menchik et al.
EX1011	U.S. Patent No. 6,022,207 to Dahlin et al. ("Dahlin")
EX1012	U.S. Patent Application Publication No. 2007/0077323 to Stonesmith et al.
EX1013	U.S. Patent Application Publication No. 2013/0075954 to Gregory, II et al.
EX1014	U.S. Patent Application Publication No. 2011/0223349 to Scott
EX1015	U.S. Patent Application Publication No. 2002/0171703 to Phillips et al.
EX1016	U.S. Patent Application Publication No. 2010/0192806 to Heugel et al.
EX1022	U.S. Provisional Application No. 61/719,874 ("the '874 Provisional")
EX1023	Evans, Practical 3D Printers (2012)
EX1024	Japanese Patent Application Publication No. JP2013-67018A to Kusama Toshiki, Certified English Translation and Original ("Toshiki")

24. My citations to non-patent literature throughout this Declaration reference the absolute page number added to the exhibit (as opposed to the original pagination of the document). For patent literature, I've used the column/line numbers or paragraph numbers. Unless I've indicated otherwise, all emphasis

(bold/italics/underline) in any quoted text are ones I have added.

25. Although I cite and quote to selected portions of various references in this Declaration, the reader should understand that these citations are representative examples. A POSITA would have viewed each reference in its entirety and in combination with other references. Accordingly, I intend the references identified in this Declaration to be viewed as incorporated in their entireties.

VI. OVERVIEW OF THE '464 PATENT

A. Description

26. The '464 patent describes "methods and systems for the automatic detection and acquiring of three-dimensional printer build material characteristics." EX1001, 1:25-27. In the '464 patent, a "supply of build material such as a spool or cartridge is instrumented with a data tag that includes information about the build material," and a "three-dimensional printer can read the information from the tag and determine how to use the build material during fabrication of a three-dimensional object." EX1001, 1:31-35.

27. FIG. 3 shows "a block diagram of a three-dimensional printer system 300 that includes a three-dimensional printer 306 and a supply 302 of build material 312." EX1001, 13:66-14:1.

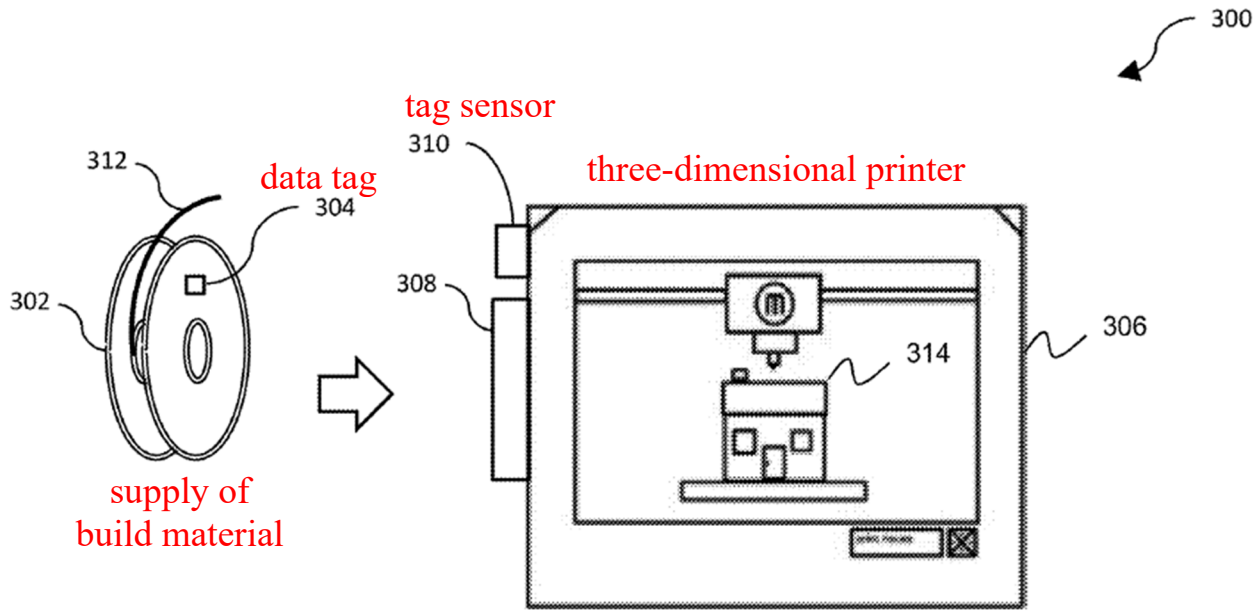

Fig. 3

EX1001, FIG. 3[1]. "The supply 302 may include a data tag 304 that stores data providing information on characteristics of the build material 312." EX1001, 14:31-33. "Once the supply 302 is coupled to the three-dimensional printer 306, the data tag 304 may be automatically read by a tag sensor 310 on the three-dimensional printer 306." EX1001, 14:33-15:11. "Once the supply 302 has been coupled to the coupling 308 and the tag sensor 310 has read the data tag 304 data, the data may be transmitted to the controller… to determine at least one operational parameter for

[1] Annotations and color added to figures unless otherwise noted.

the three-dimensional printer 306 based on at least one characteristic of the build material 312 for the fabrication of an object 314." EX1001, 15:12-18.

28. The '464 patent further discloses that "the determination of operational parameters may include preliminary diagnostic tests such as whether the diameter of the build material, size of a build material pellet, build material fluid viscosity, or the like is appropriate for the three-dimensional printer 306. Additional diagnostic test may be performed such as whether the correct build material 312 is provided on the supply 302, whether the correct color or color lot build material 312 is on the supply, or any other appropriate preliminary diagnostic build material test used to determine, as a threshold matter, whether a desired fabrication can be performed with the supply 302." EX1001, 15:54-65.

B. Effective Priority Date of the Claims of the '464 Patent

29. Based on my analysis of the '464 patent claims and U.S. Provisional Application No. 61/719,874 ("the '874 Provisional"), independent claims 1, 12, and 19 and all claims dependent on claims 1, 12, and 19 are not entitled to the filing date of the '874 Provisional because claims 1, 12, and 19 do not have written description support in the '874 Provisional.

30. Each of the Challenged Claims requires reading data from a tag (elements 1[a], 12[c], 19[a]), determining an operational parameter based upon the data (elements 1[b], 12[d], 19[d]), performing a diagnostic test to determine whether

the operational parameter is suitable for the three-dimensional printer (elements 1[c], 12[d], 19[e]), and when the operational parameter is suitable for the three-dimensional printer according to the diagnostic test, controlling operation of the three-dimensional printer according to the operational parameter (elements 1[d], 12[e], 19[f]).

31. The ’874 Provisional discloses no such system that performs this method. For example, the ’874 Provisional discloses:

> In one aspect, the printer 706 may include one or more readers, scanners, sensors or the like to detect the tag 704 and obtain data therefrom. In another aspect, the tag 704 may include a number of mechanical features that can be detected by corresponding sensors (e.g., contact switches or the like) when the supply 702 is coupled to the printer 706. The tag 704 may encode data such as an identification number that can be used to retrieve relevant information from a remote source, or the tag 704 may directly encode relevant information. This may include data describing the build material such as the type, color, diameter, and so forth of the build material in the supply 702.

EX1022, 78 ([0027]).

> In another aspect, the printer 706 may be programmed to employ information obtained using the tag 704, which may as noted above include data stored directly on the tag 704 or data that can be retrieved for the build material and/or supply 702 from a remote source based upon the data from the tag 704. In one aspect, this may include

> preliminary diagnostic tests such as whether the diameter of the build material is appropriate for the three-dimensional printer 706. In another aspect, this may include selection of defaults for tool instructions such as a build platform temperature, extrusion temperature, and so forth, any of which may be selected according to the properties of the build material and/or the characteristics of the three-dimensional printer.

EX1022, 79 ([0028]). While this disclosure mentions "diagnostic tests," the diagnostic test explicitly described relates to the "diameter of the build material," which is merely "data describing the build material" and not an "operational parameter" as required by the claims. This disclosure does not describe performing a diagnostic test on "tool instructions" such as "a build platform temperature" or "extrusion temperature." Thus, this disclosure does not adequately provide written description support for performing a diagnostic test to determine whether the operational parameter is suitable for the three-dimensional printer (elements 1[c], 12[d], 19[e]) and when the operational parameter is suitable for the three-dimensional printer according to the diagnostic test, controlling operation of the three-dimensional printer according to the operational parameter (elements 1[d], 12[e], 19[f]).

32. In another example, the '874 Provisional discloses that "the method 400 may include evaluating an availability of the three-dimensional printer for the print job. This may be based upon a signal from any of the sensors associated with the

three-dimensional printer." EX1022, 49 ([0087]). "A wide variety of evaluations may be performed. … For example, if an optical sensor detects an object within a working volume of the three-dimensional printer, or if a thermal sensor detects that a print head is not at a suitable temperature (or is not responding correctly to a heating command), the printer may not be ready and a corresponding evaluation may be provided." EX1022, 49-50 ([0088]). This disclosure does not use the term "diagnostic test." Further, the evaluations described here do not determine whether an operational parameter is suitable for the printer. Specifically, determining whether there is "an object within a working volume" does not disclose determining whether an operational parameter is suitable for the printer because "an object within a working volume" is not an operational parameter. Determining that "a print head is not at a suitable temperature (or is not responding correctly to a heating command)" is not a test of whether the print head temperature, determined based on the tag data, is suitable for the printer and thus does not disclose determining whether an operational parameter, determined based on the tag data, is suitable for the printer (elements 1[c], 12[d], 19[e]).

33. The '874 Provisional further discloses that "[a]s another example, a sensor may detect a quantity of build material available to the printer, and a processor on the printer may determine if the supply is inadequate for the requested print job. Thus evaluating the availability of the three-dimensional printer may include

accepting the print job only if a supply of build material available for the three-dimensional printer exceeds an amount of build material required for the print job and one or more additional jobs ahead of the requested print job in the queue." EX1022, 49-50 ([0088]). Nowhere does the '874 Provisional disclose that the "amount of build material required for the print job" is determined based on the tag data. Therefore, this disclosure does not adequately provide written description support for determining an operational parameter based upon the data (elements 1[b], 12[d], 19[d]) and performing a diagnostic test to determine whether the operational parameter is suitable for the three-dimensional printer (elements 1[c], 12[d], 19[e]).

34. The '874 Provisional generically explains that "any of a variety of status checks for normal, error-free functioning of the three-dimensional printer may be undertaken prior to accepting (or transmitting from a requester) a new print job. More generally, a variety of sensors and other inputs (including, e.g., data that may be stored locally in a memory of the three-dimensional printer) may provide useful information for assessing the availability of the device, and may be used as the sensor(s) contemplated herein to evaluate availability of the three-dimensional printer for a print job." EX1022, 50 ([0089]). A generic disclosure of "a variety of status checks" using "a variety of sensors and other inputs" is not equivalent to a description of performing a diagnostic test to determine whether the operational

parameter, determined based upon the tag data, is suitable for the three-dimensional printer (elements 1[c], 12[d], 19[e]).

35. In another example, the '874 Provisional discloses that the "three-dimensional printer may also be configured for a variety of diagnostic and technical support functions. … For example, the processor may be configured to fabricate a test object, capture an image of the test object, and compare the image to the test object to validate operation of the three-dimensional printer." EX1022, 62 ([00129]). There is no indication that the test object is fabricated using an operational parameter determined based on the tag data, and therefore the diagnostic function described here does not adequately provide written description support for performing a diagnostic test to determine whether the operational parameter is suitable for the three-dimensional printer (elements 1[c], 12[d], 19[e]).

36. Consequently, the '874 Provisional does not actually or inherently disclose each and every element of claims 1-6 and 10-19. As such, I have applied a date of October 28, 2013, as the date of invention.

VII. OVERVIEW OF CONCLUSIONS FORMED

37. This Declaration explains the conclusions that I have formed based on my independent analysis. To summarize those conclusions:

- Based upon my knowledge and experience, and my review of the materials listed above, I believe that Claims 1, 4, 5, 11-17 of the '464

patent are obvious in view of Dahlin (EX1011) and Menchik (EX1009). *See* Ground 1A at Section IX.A.

- Based upon my knowledge and experience, and my review of the materials listed above, I believe that Claims 2, 3, 6, 10, 18, 19 of the '464 patent are obvious in view of Dahlin, Menchik, and Loughran (EX1004). *See* Ground 1B at Section IX.B.
- Based upon my knowledge and experience, and my review of the materials listed above, I believe that Claims 1-6, 10-15, 17-19 of the '464 patent are obvious in view of Loughran and Toshiki (EX1024). *See* Ground 2 at Section IX.C.

VIII. OVERVIEW OF THE CITED REFERENCES

A. Dahlin

38. Dahlin "relates to the field of three-dimensional prototype modeling." EX1011, 1:5-6. Dahlin's FIG. 1 shows a "rapid prototyping system 10." EX1011, 2:44-45.

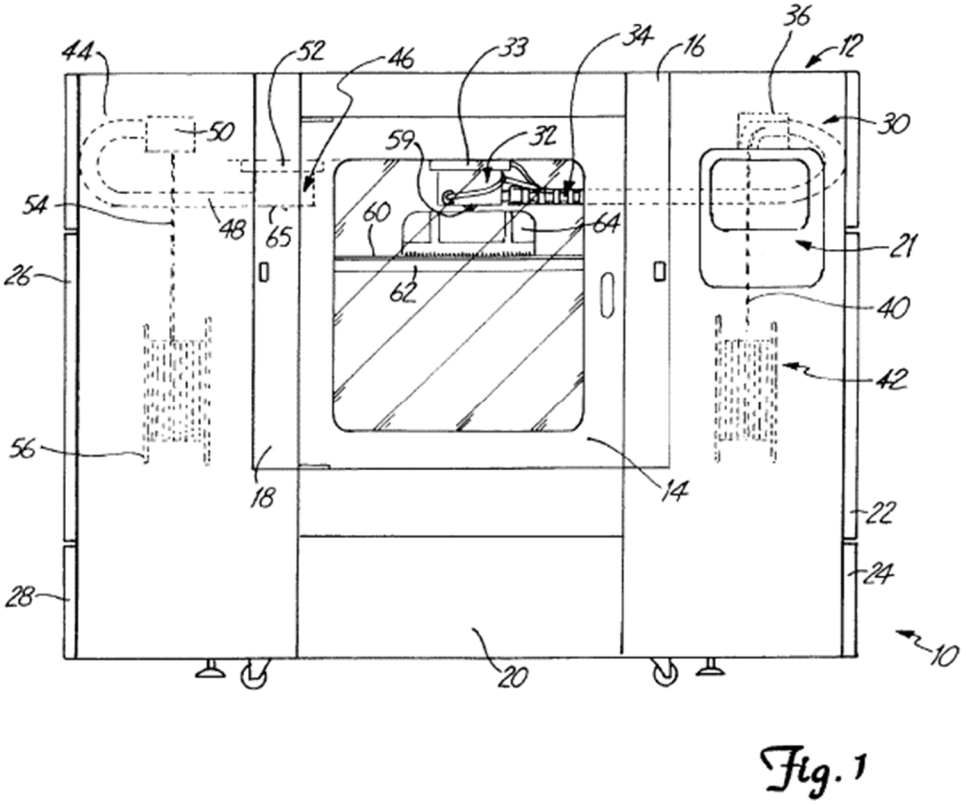

EX1011, FIG. 1, 2:44-45. In Dahlin, "three-dimensional objects are formed using filament supplied from a spool having an associated circuit for maintaining data regarding type and amount of filament on the spool." EX1011, 1:13-17. Based on the "data regarding the type and amount of filament on the spool," Dahlin's system can diagnose (and notify the operator) "if the type of filament does not match the type of material identified by object specification data or if the amount of filament on the spool is insufficient to create a desired object." EX1011, 1:64-2:2. Specifically, "[a]t the outset of a job, the CPU92 will calculate whether a spool 42 or 56 contains enough filament to complete the job. Operator notification is then provided via touch screen display 21, stating either that the filament is adequate to

complete the job, or that the filament spool will need replacement and reloading during the process." EX1011, 5:27-32.

B. Menchik

39. Menchik discloses "apparatuses and methods useful in three-dimensional object printing." EX1009, [0001], [0006], [0018]. Menchik's "FIG. 1 is a block diagram of a 3D printer system 100" that "may include, for example, a controller 105, printing apparatus 140, and one or more three dimensional modeling material supply sources such as cartridge apparatuses 180 or cartridge arrays 190." EX1009, [0020], [0009], [0006].

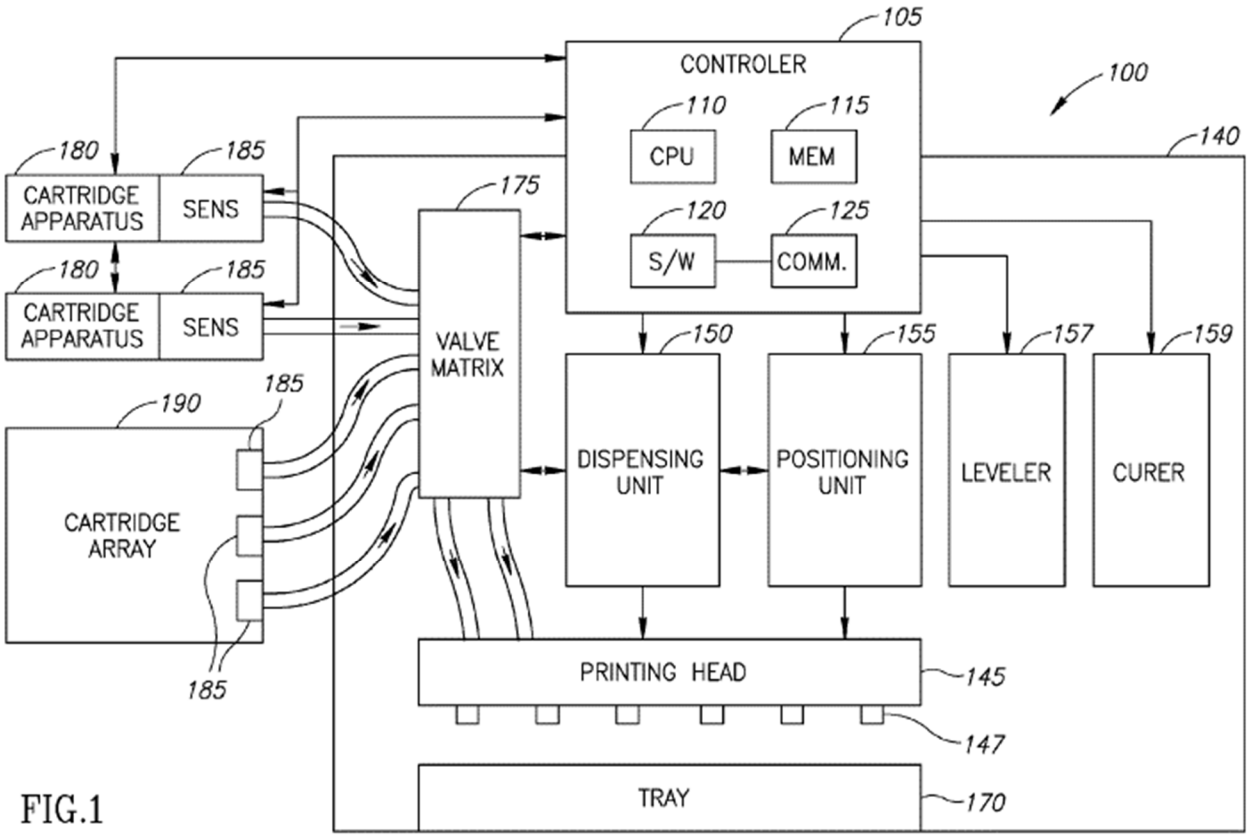

EX1009, FIG. 1.

40. Menchik's "[c]artridge housing 210 may include an interface unit or memory device reader, such as a memory chip reader 225 that may be connected to printing controller 105, to read data from one or more memory devices such as memory chips or other data storage units associated with cartridge 250, and transfer data to controller 105." EX1009, [0030], [0037]. In Menchik, "a memory device such as a memory chip 260 or other suitable data storage device may be associated with cartridge 250. Memory chip 260 may, for example, store and/or record information relating to the material stored within cartridge 250, for example, the type of building material in the cartridge bag 300, the material's color, manufacturing date, optimal operation parameters (e.g., recommended jetting temperature), optimum building parameters (e.g., for building or support), and material parameters (e.g., viscosity and surface tension at the recommended temperature etc.) etc. Other suitable data may be stored. Building material information may include, for example, material density, material mass per volume, and other suitable data from which material status may be computed." EX1009, [0035]. Menchik's system provides for "management and control of the supply of building materials" by "processing the building material status data to determine parameters of the building material." EX1009, [0006]-[0007].

41. Menchik's "[c]ontroller 105 may use the data received, for example, data from memory chip reader 225, data from load cell 230, and other data, to

compute printing parameters, including, for example, guidelines for which cartridges to use, how many to use, if and when any replacements are necessary etc." EX1009, [0037]. "Controller 105 may receive data from one or more material supply sources, and control the supply of building material to printing apparatus 140, for example, by controlling the extraction or flow of materials from the printing material sources, such as printing cartridges." EX1009, [0027], [0007]. Menchik computes "material parameters for building material(s), material required to construct one or more objects, and supply parameters for materials." EX1009, [0027]. Menchik computes "the amount of modeling material, support liquid, or combination of modeling and support materials required for printing a given three-dimensional object" and determines "whether the amount of modeling and/or support material in the available cartridges is sufficient to complete a three-dimensional object to be built or printed." EX1009, [0048]-[0049], [0046].

C. Loughran

42. Loughran describes "a solid freeform fabrication (SFF) system." EX1004, Abstract. Loughran discloses that "solid freeform fabrication (SFF) encompasses technologies that are employed to fabricate physical objects directly from computer-aided drafting (CAD) data sources." EX1004, [0001]. Loughran's FIG. 1 shows a diagram of a system 100 including a SFF system 104 that fabricates SFF jobs received from client system 102. EX1004, [0005], [0012], [0044], [0049]-

[0050]. Loughran explains that the "SFF system 104 fabricates physical objects from SFF fabrication jobs in a layer-by-layer manner." EX1004, [0013].

FIG 1

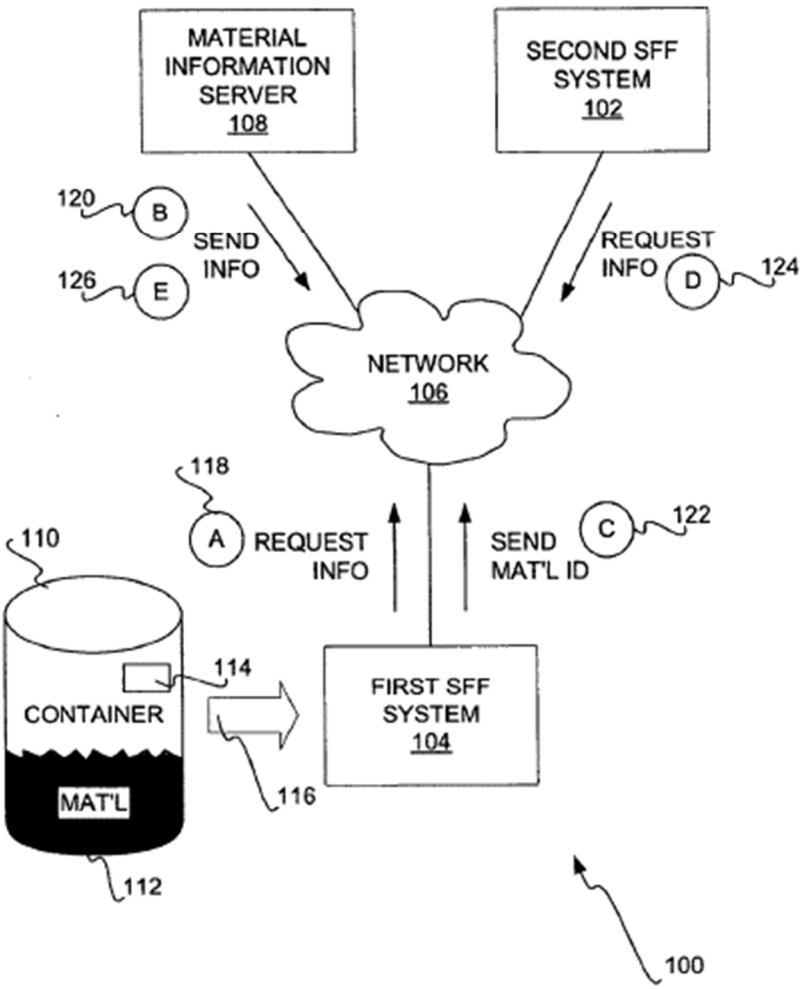

EX1004, FIG. 1.

43. As shown in Figure 1, above, the SFF system 104 (where the three-dimensional printer is located) communicates through a network with both a material information server 108 and a second SFF system 102. The second SFF system 102

can send print jobs to the first SFF system 104, including print jobs that have been customized based on characteristics of the material in material container 110. For example, Loughran describes that the "SFF system 104 receives the material identifier from the tag 114 of the material container 110." EX1004, [0033], Abstract, [0047]. Loughran discloses that, after the SFF system 104 reads the material identifier from the tag (EX1004, [0021], [0033]), the SFF system 104 sends "the material identifier for the material 112 to the [client] system 102, as indicated by the letter C 122" shown in FIG. 1, and the client system 102 "may receive the unique material identifier of the material 112 from the second SFF system 104." EX1004, [0028], [0038]. The remote client system 102 then "parses the information regarding the materials for using it in SFF fabrication job generation." EX1004, [0043].

44. Loughran's client system 102 includes "CAD software 610" shown in FIG. 6 that "generates a SFF fabrication job for fabrication from a specific material based on the information regarding that material which has been received. The CAD software 610 then sends the SFF fabrication job to the second SFF system 104 over the network 106 via the communication mechanism 604 of the [client] system 102." EX1004, [0055], [0052], [0049]. The SFF system 104 employs "the information regarding the material 112 when fabricating physical objects from the material 112 in accordance with SFF fabrication jobs received from the [client] system 102." EX1004, [0023].

D. Toshiki

45. Toshiki relates a "three-dimensional modeling device," e.g., "an inkjet modeling device." EX1024, [0026]. Toshiki discloses that the three-dimensional modeling device includes "remaining amount detecting unit 405" and "a tank replacement determining unit 406." EX1024, [0100], [0013]. "The remaining amount detecting unit 405 detects the remaining amount of the modeling material in the modeling material storage tank, and outputs the detection result to the tank replacement determining unit 406." EX1024, [0109]. "Specifically, the remaining amount of model material M in each model material cartridge 13M and the remaining amount of support material S in each support material cartridge 13S are detected." *Id.* "The tank replacement determining unit 406 determines whether or not the modeling material storage tank needs to be replaced while performing model processing on the basis of the remaining amount detected by the remaining amount detecting unit 405, and outputs the determination result to the display unit 122. The determination of whether or not the tank needs to be replaced is made by comparing the current remaining amount of the model material M and the support material S with the cumulative amount of the modeling material to be used in model processing." EX1024, [0110], [0139], [0015], [0017]. "The display unit 122 displays the determination result by the tank replacement determining unit 406 on the screen at least before model processing is started," and "if it is determined that

the support material cartridge 13S or the model material cartridge 13M must be replaced during model processing, a message is displayed indicating that the tank needs to be replaced." EX1024, [0111], [0121].

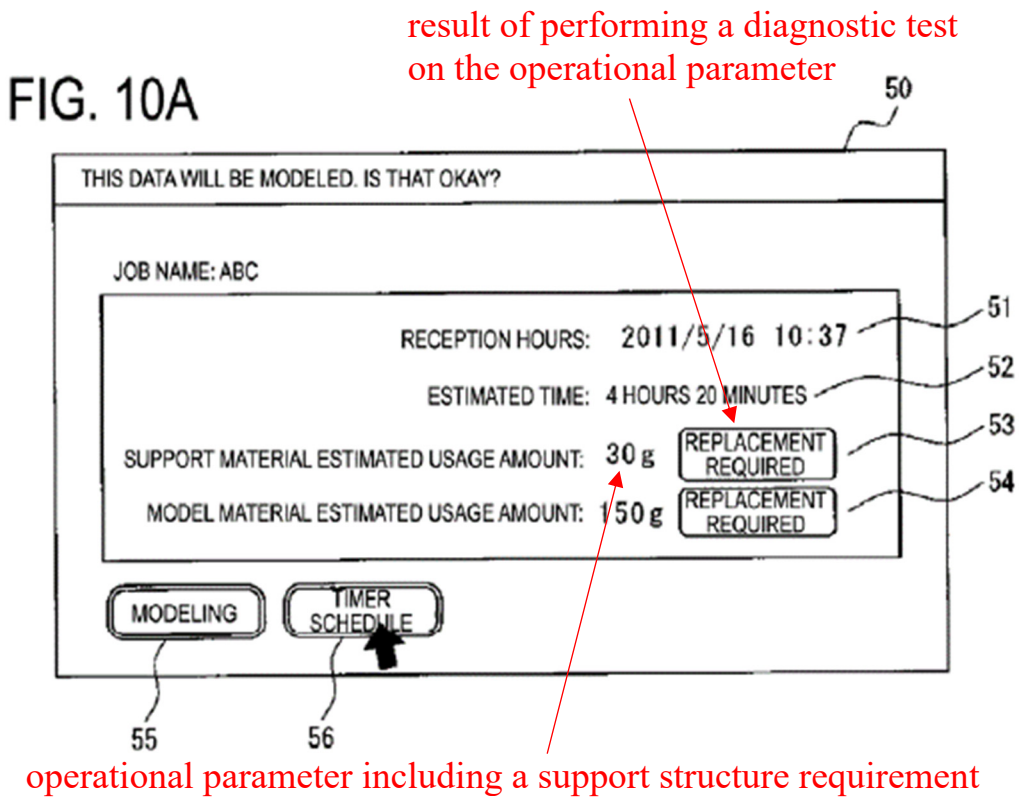

EX1024, FIG. 10A. "With this configuration, the determination result of whether or not the tank needs to be replaced is displayed before performing model processing, so the user can recognize in advance whether or not the modeling material storage tank needs to be replaced during model processing." EX1024, [0014], [0023], [0009]-[0010]. "Therefore, the user can start model processing after replenishing the modeling material by replacing the modeling material storage tank that is estimated to require replacement." EX1024, [0123], [0183].

IX. APPLICATION OF THE CITED REFERENCES TO THE CHALLENGED CLAIMS

A. GROUND 1A— Claims 1, 4, 5, 11-17 are obvious over Dahlin and Menchik

1. Dahlin-Menchik Combination

46. Based on my knowledge and experience in the field and my review of Dahlin and Menchik, by the relatively late timeframe leading up to 2013, it is clear that a POSITA would have been motivated to implement Dahlin's system based on the suggestions of Menchik to include additional functionality of a data tag/readable memory storing optimal operation parameters, optimum building parameters, and material parameters, and the system computing material and supply parameters including the amount of material required for printing a given object for purposes of achieving several known benefits that I articulate in further detail below. Such an implementation of Dahlin's system based on the teachings of Menchik would have enabled the resulting system to determine operational parameters based on data stored in its circuit, including the amount of modeling and support filament required for completing the job, in order to "calculate whether a spool 42 or 56 contains enough filament to complete the job." EX1011, 5:26-37. Indeed, multiple reasons would have motivated a POSITA to make this combination.

47. As a ***first*** reason, a POSITA would have been motivated to apply Menchik's suggestion to Dahlin to beneficially provide "a system for efficiently

managing the supply of materials for usage during a printing process." EX1009, [0005]. Indeed, Menchik explains that the "printing of a given three-dimensional object may require a finite and calculable amount of building material for completion" and thus "[i]t may be advantageous to have a system for efficiently managing the supply of materials for usage during a printing process." EX1009, [0005]. As such, a POSITA would have recognized that inclusion of additional functionality of a data tag/readable memory storing optimal operation parameters, optimum building parameters, and material parameters as suggested by Menchik in the system of Dahlin in such a manner that in the resulting system the spool's data circuit stores optimal operation parameters, optimum building parameters, material parameters, and building material information, and the printer controller determines supply parameters using the information stored in the circuit would have beneficially allowed the resulting system to calculate the amount of material needed for completion and use the finite amount of building materials efficiently. EX1009, [0035], [0049].

48. As a ***second*** reason, a POSITA would have been motivated to implement Dahlin's system based on the suggestions of Manchik because such an implementation would have facilitated Dahlin's ability to "ensure continuous and uninterrupted supply of required material(s) to a 3D printing apparatus" and to "negate the necessity for manual monitoring of materials and on-hand replacement

of containers during printing." EX1009, [0017]. A POSITA would have recognized that ensuring continuous and uninterrupted supply of materials without the need for manual monitoring the material supplies would have increased the ease of use of the resulting system and overall efficiency of the system. Thus, a POSITA would have found it desirable to implement the resulting system based on the suggestions of Menchik to determine the amount of modeling and support filament required for completing the job, in order to "calculate whether a spool 42 or 56 contains enough filament to complete the job." EX1011, 5:26-37. A POSITA would have been motivated to implement Dahlin's system in this predictable manner to beneficially facilitate Dahlin's ability to provide the operator with the opportunity to respond to the notification before the printing begins by, for example, making modifications to the printing file (e.g., to create a design that would use less material) or replacing the support filament spool with a spool that contains enough support filament to complete the job before printing begins instead of replacing and reloading the spool during the printing process. A POSITA would have recognized that preventing interruption of the printing process in such a manner would have improved the through processing time of print jobs allowing for more dependable scheduling of consecutive print jobs.

49. As a ***third*** reason, a POSITA would have been motivated to apply Menchik's suggestion to Dahlin to provide a system that uses the optimal operation

parameters, optimum building parameters, material parameters, and supply parameters for the materials and the job. A POSITA would have been motivated to implement Dahlin based on Menchik's suggestion to advantageously allow optimal use of the various functions of the printer based on the nature of the materials in the printer and production of a higher quality object. As such, overall efficiency and performance of the resulting system would have been improved.

50. Finally, the Dahlin and Menchik are directed toward highly similar subject matter, with each reference describing a system for fabricating three-dimensional objects, which is the same as the '464 patent. EX1011, 1:5-6, 2:44-45, 1:13-17; EX1009, [0001], [0006]-[0010], [0018]-[0020], [0035]; EX1001, 2:1-5, 3:21-27. In light of these similarities, a POSITA would have possessed ample skill to successfully implement the combination as I have described above. Such an implementation of Dahlin's system based on Menchik's suggested techniques would have been merely the application of known techniques to a known system ready for improvement to yield predictable results. Based upon my knowledge and experience in this field and my review of Dahlin and Menchik, I am confident a POSITA would have recognized that this modification would have yielded predictable results and required only routine adjustments to the software to provide the additional functionality disclosed by Menchik and as such a POSITA would have had a reasonable expectation of success in making such modifications. This modification

would not have significantly altered or hindered the functions performed by Dahlin's system, and these modifications would have been within the predictable and ordinary level of skill of a POSITA (certainly by a time frame as late as 2013).

2. Claim Element Analysis

(a) Claim 1

1[p]. A method, comprising:

51. Dahlin's rapid prototyping system includes an electrical system 90 and a CPU 92 that performs a method to thereby "control the overall operation of the electrical system 90." EX1011, 4:30-34. This components are shown, for example, in FIG. 5:

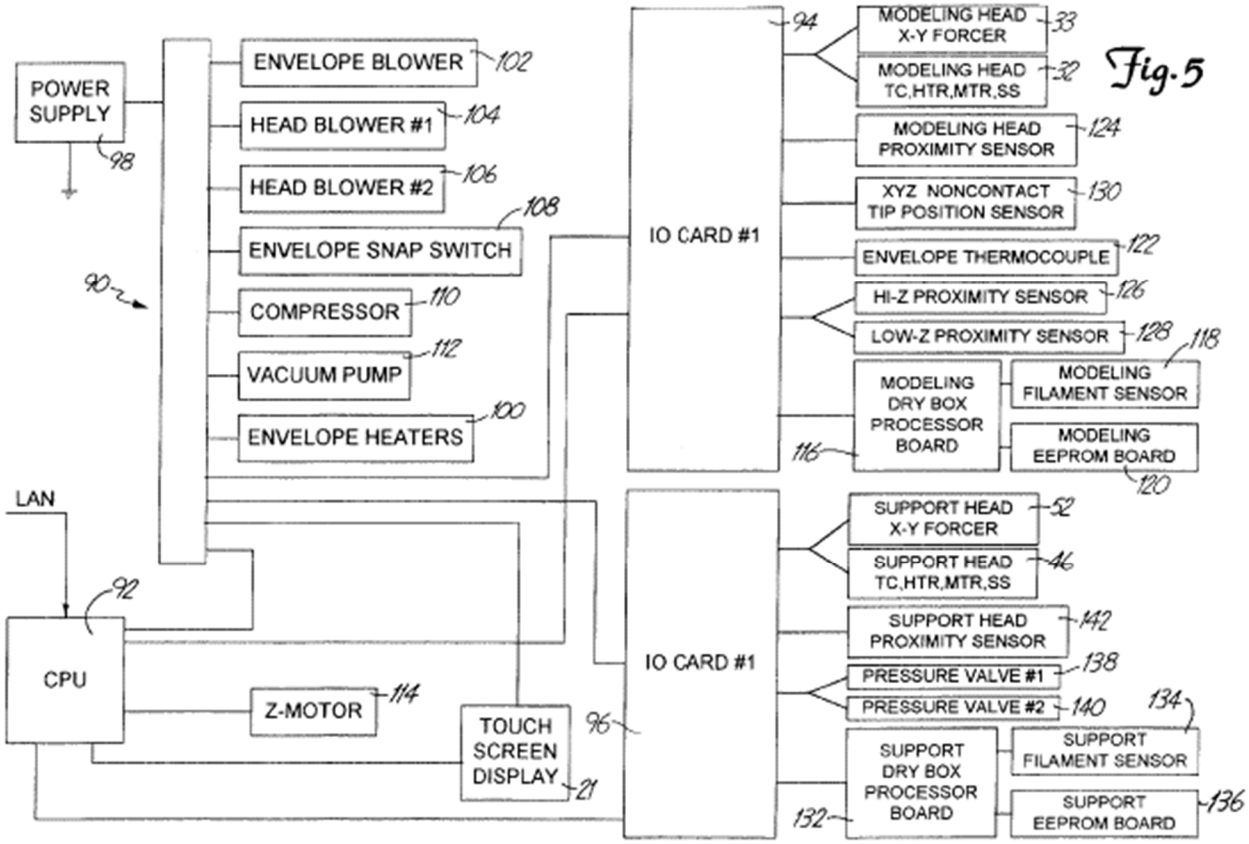

EX1011, FIG. 5. In one example, Dahlin describes that the CPU 92 "receives modeling filament data," "calculate[s] whether a spool 42 or 56 contains enough filament to complete the job," and provides "[o]perator notification…, stating either that the filament is adequate to complete the job, or that the filament spool will need replacement and reloading during the process." EX1011, 5:26-37.

1[a]. reading data from a tag included on a supply of a build material using a tag sensor in communication with a controller of a three-dimensional printer, the data including at least one property of the build material;

52. Dahlin describes that its rapid prototyping system is employed "for forming three-dimensional objects" and is thus a three-dimensional printer. EX1011, 1:6-21, 3:27-31, 4:17-18, 6:28-39. Dahlin's FIG. 1 shows a "rapid

prototyping system 10." EX1011, 2:44-45. During operation of Dahlin's system, "[m]odeling extrusion apparatus 30 receives a filament of modeling material 40 from a modeling filament spool 42 located in a modeling drybox 45," and "[s]upport extrusion apparatus 44 receives a filament of support material 54 from a support filament spool 56 located in a support filament drybox 57." EX1011, 2:60-64, 3:7-11. Each spool has "an associated circuit for maintaining data regarding type and amount of filament on the spool." EX1011, 1:13-17, 1:61-64.

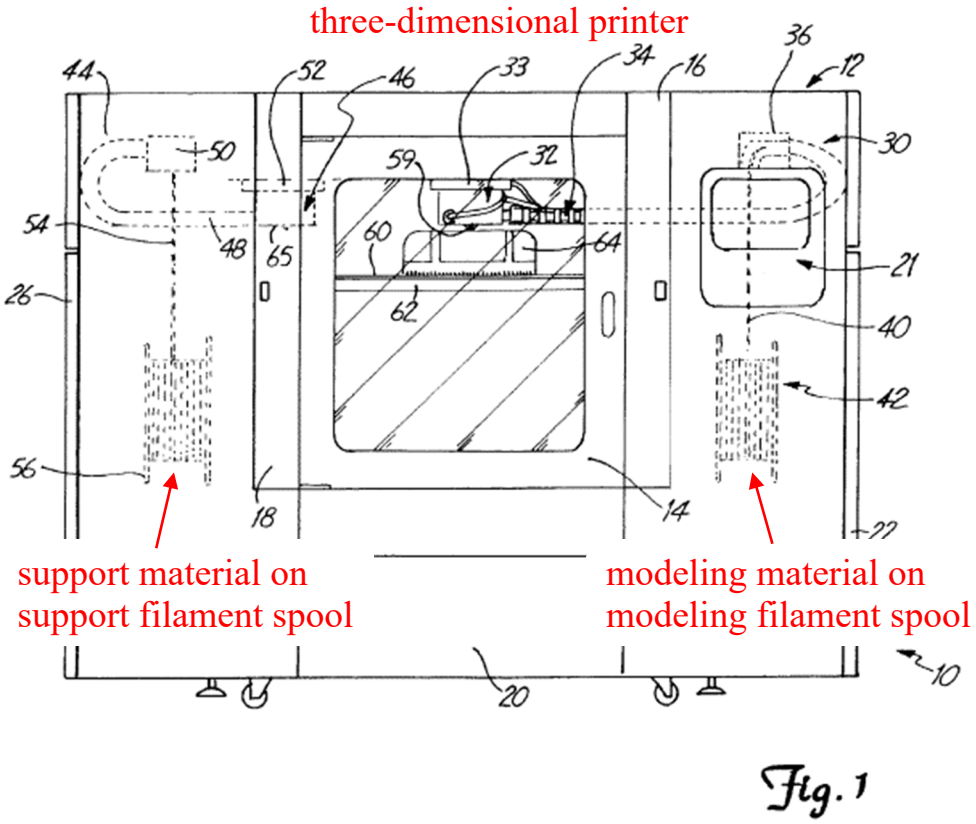

EX1011, FIG. 1.

53. As shown in FIG. 5 (reproduced and annotated below), Dahlin's rapid

prototyping system includes an electrical system 90 that "controls the system 10" and a CPU 92 to "control the overall operation of the electrical system 90." EX1011, 4:30-6:6. Dahlin discloses that a "[m]odeling drybox processor board 116 is mounted inside of modeling filament drybox 45" and "receives data concerning the modeling filament from… a modeling EEPROM board 120, which is a circuit board carrying an electronically readable and writeable device (EEPROM 188, shown in FIG. 7) attached to modeling material filament spool 42. EEPROM board 120 acts as an electronic tag with a variety of functions. It informs the control system 90 of the type of filament that is on the spool and of the lineal feet of filament on the spool." EX1011, 5:3-14. "CPU 92 receives the modeling filament data from IO card 94," which "monitors data concerning modeling material filament spool 42 through communications with a modeling drybox processor board 116." EX1011, 5:1-43. Dahlin's system 10 also includes "support drybox processor board 132" that "receives data concerning the support filament from… a support EEPROM board 136, attached to support material filament spool 56. EEPROM board 136 acts as an electronic tag, in the same manner as EEPROM board 120. CPU 92 receives the support filament data from support processor board 132." EX1011, 5:55-64.

54. The modeling drybox processor board 116 is a tag sensor that reads data from the EEPROM board 120, which "acts as an electronic tag," attached to modeling material filament spool 42 (a supply of build material). EX1011, 5:3-14.

The support drybox processor board 132 is a tag sensor that reads data from the EEPROM board 136, which "acts as an electronic tag," attached to support material filament spool 56 (a supply of build material). EX1011, 5:55-64. As shown in FIG. 5 below, the CPU 92 (controller) receives the modeling material data and the support material data through communication with the modeling drybox processor board 116 (tag sensor) and support drybox processor board 132 (tag sensor), respectively:

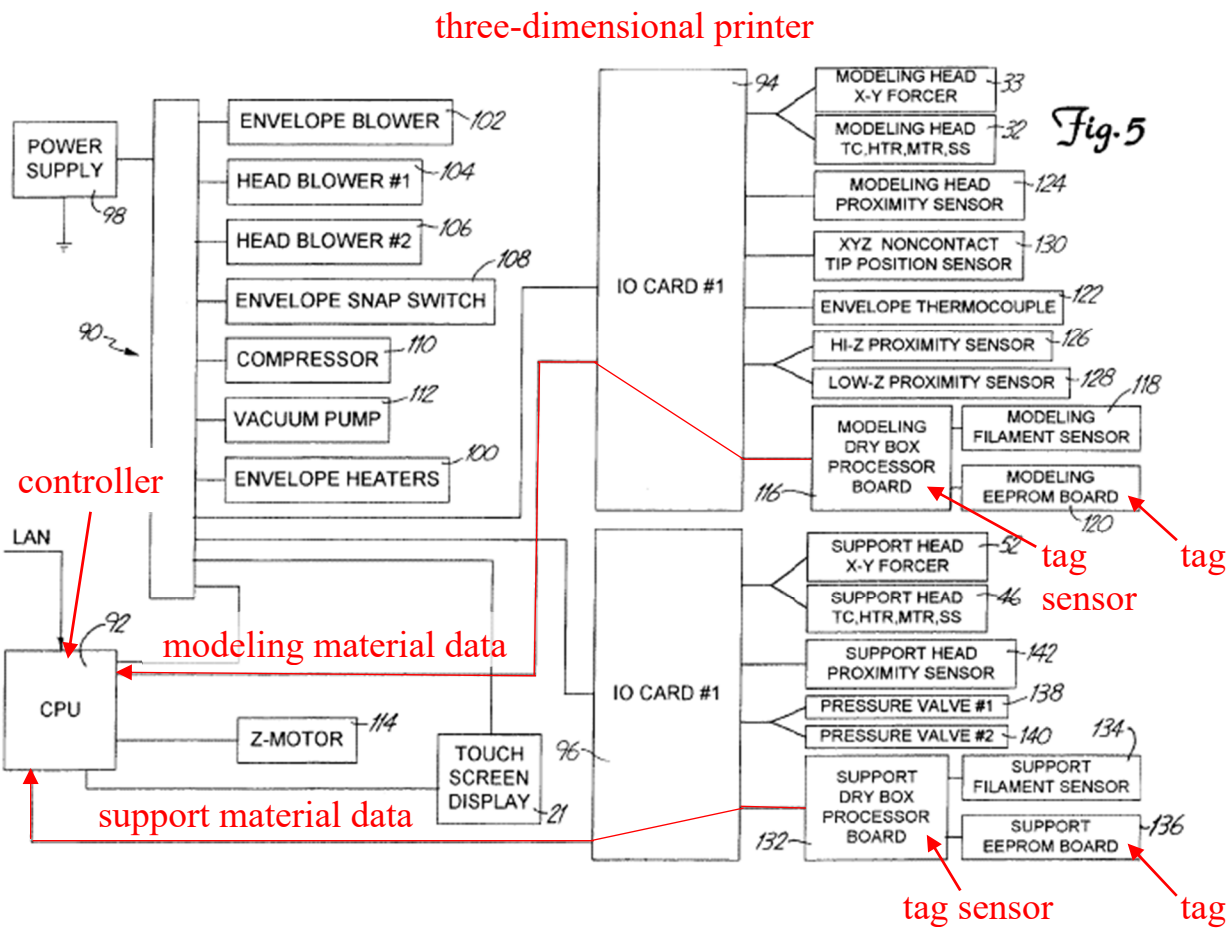

EX1011, FIG. 5. The data read from the tag includes "type of filament that is on the spool" and "the lineal feet of filament on the spool," which are properties of the build

material. EX1011, 5:3-14, Abstract, 1:13-17, 1:64-2:2, 11:26-28, 12:13-14, 12:41-46.

55. Dahlin further describes that "FIG. 7 shows a detailed exploded view of the filament spool and spindle." EX1011, 8:43-44. "The mechanical configuration of the filament spool and spindle is identical for both the modeling filament and the support filament." EX1011, 8:44-46. The spindle sleeve 182 holds an "EEPROM board 120" that "carries EEPROM 188." EX1011, 8:65-66. "When filament spool 42 is manually inserted onto spool holder 43, electrical contact between EEPROM board 120 and drybox processor board 116 is made through the connector 190." EX1011, 9:12-15. As shown in FIG. 7, the EEPROM board 120 (tag) is included on filament spool (supply of build material):

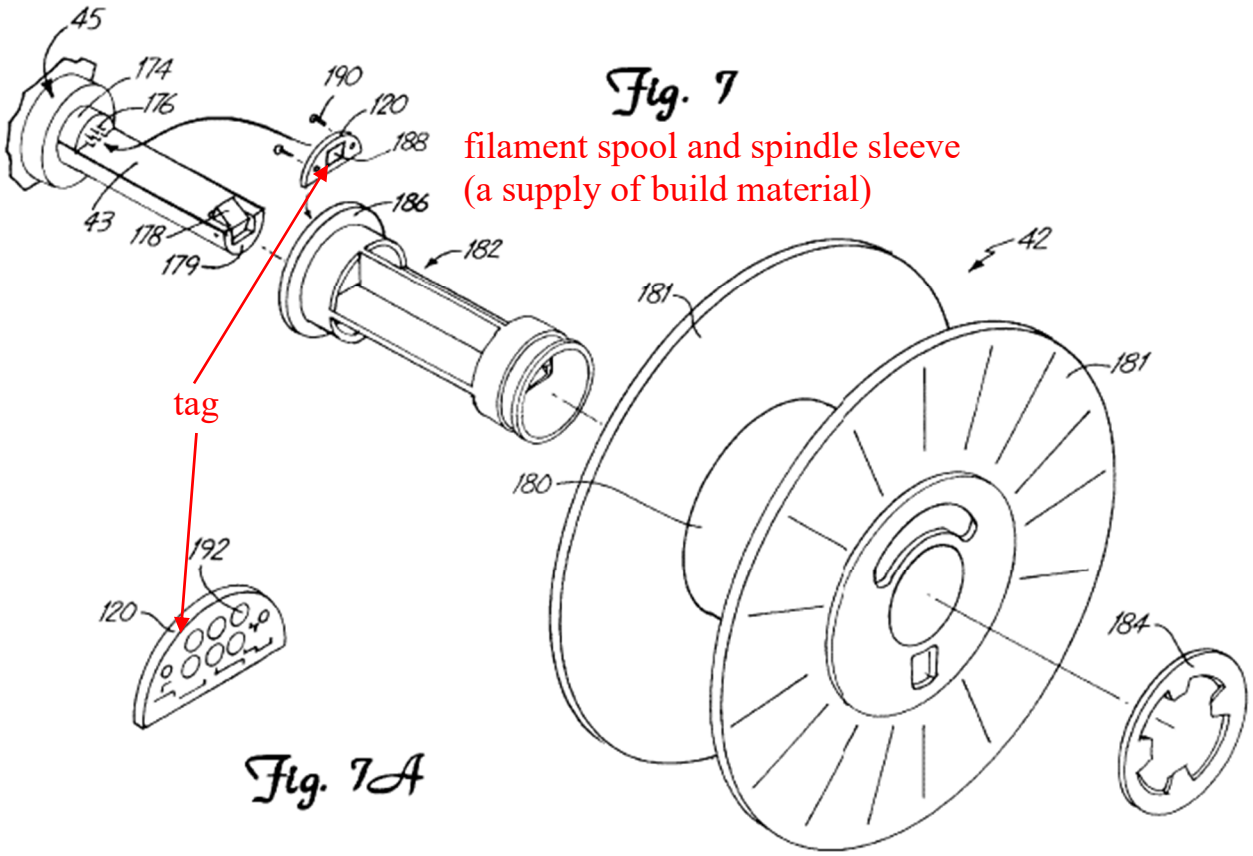

EX1011, FIGS. 7, 7A.

1[b]. determining an operational parameter of a fabrication process using the three-dimensional printer based upon the data, the operational parameter including at least one of a build platform temperature, a build volume temperature, an infill requirement, a rafting requirement, a support structure requirement, and a cooling requirement;

56. As previously described, Dahlin teaches that the EEPROM board 120 serves as "an electronic tag with a variety of functions" to communicate information about the filament of material to the control system 90. EX1011, 5:11-12. Additionally, Dahlin also more broadly suggests the type of information (about the filament of material) that is "desirable" for communicating to the control system. EX1011, 1:40-47. Namely, Dahlin expressly suggests, for such a "filament feed"

system, that it is "desirable for the control system to know" not only "the type of material" that is coupled to the printer, but also "the proper extrusion parameters for dispensing the material" and describes a known prior art example of a "memory device" that "serves as an electronic tag which informs the control system of the type of material that is in the cassette, the proper extrusion parameters for dispensing the material, the current number of rods in the cassette, and the cassette serial number." EX1011, 1:40-58. Thus, based on Dahlin's express suggestion in column 1 and by the relatively late time frame leading up to 2013, a POSITA would have been motivated to implement Dahlin's "electronic tag with a variety of functions" to store "proper extrusion parameters." EX1011, 5:11-12, 1:40-47 (discussing the various operational parameters). As such, implementation of such a modification would have advantageously enabled Dahlin's control system 90 to determine such operational parameters by simply reading them from the electronic tag and to fabricate objects using those proper extrusion parameters for that particular filament material. [2] *Id.*, 4:30-5:53. A POSITA would have recognized that this

[2] This implementation of Dahlin aligns with the '464 patent's example where "the controller may make the determination of operational parameters using only the data from the data tag 304. For example, the data tag 304 may explicitly specify an

implementation of Dahlin's system provides this claim element.

57. Additionally or alternatively, as discussed above in Section IX.A.1, a POSITA would have also been motivated to implement Dahlin's system in a manner that employs Menchik's suggestion (e.g., the memory device storing optimal operation parameters, optimum building parameters, material parameters, and building material information, and the controller computing material and supply parameters including the amount of material required for printing a given object) to thereby enable Dahlin's system to determine the amount of support material required for printing a given object (operational parameter) based on building material information stored in its tag. Such a configuration for the resulting system demonstrates yet another way that the Dahlin-Menchik system meets this claim element. Menchik's FIG. 6 shows that at "block 610 various parameters of the materials within the various cartridges may be computed by the controller, for example, the amount of material of each type and/or color presently available in each cartridge, by, for example, utilizing the data provided by the respective sensors and respective memory chips attached to the respective cartridges." EX1009, [0047]. Additionally, at "block 615 the printer controller may compute, for example, the

---

extruder temperature and the controller may use the extruder temperature as an operational parameter." EX1001, 15:26-31.

amount of modeling material, support liquid, or combination of modeling and support materials required for printing a given three-dimensional object. The printer controller may also compute the expected order and quantity of uptake and deposition of each type of material into the printing apparatus, for the printing or construction of a given object." EX1009, [0048].

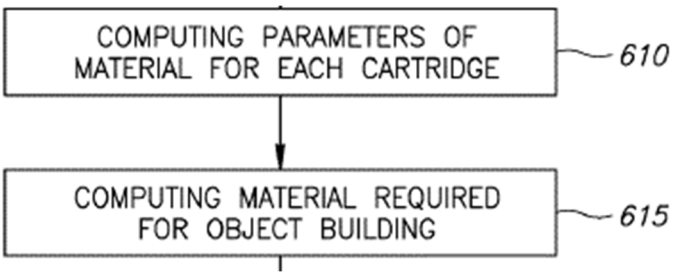

EX1009, FIG. 6 (partial). Indeed, as explained above, Menchik provides evidence of the conventional practice long before 2013 for a three-dimensional printing system to use "a memory device such as a memory chip 260" (associated with a supply of 3D printer material) that stores a greater variety of "information relating to the material stored within cartridge 250." EX1009, [0035]. Additionally, Menchik discloses that "[o]ther suitable data may be stored. Building material information may include, for example, material density, material mass per volume, and other suitable data from which material status may be computed." EX1009, [0035]. "For example, material status data may indicate types... of building material in one or more supply sources." EX1009, [0027]. "Memory chip 260 may, for example, store and/or record information relating to the material stored within

cartridge 250, for example, the type of building material in the cartridge bag 300." EX1009, [0035]. Menchik also suggested that 3D printer system could then advantageously provide for "management and control of the supply of building materials" by "processing the building material status data to determine parameters of the building material" such as "the amount of modeling material, support liquid, or combination of modeling and support materials required for printing a given three-dimensional object." EX1009, [0006]-[0007], [0048]. Menchik further confirmed it was an ordinary option before 2013 for the controller to compute "material parameters for building material(s), material required to construct one or more objects, and supply parameters for materials." EX1009, [0027]. Thus, for the reasons articulated above, the predictable Dahlin-Menchik combination would have readily determined an operational parameter of a fabrication process using the 3D printer ("the amount of modeling material, support liquid, or combination of modeling and support materials required for printing a given three-dimensional object") based on such data read from the electronic tag (e.g., building material information). *Supra* Sections VIII.B, IX.A.1.

58. Dahlin further discloses that based on the "data regarding the… amount of filament on the spool," Dahlin's system "notifies the operator… if the amount of filament on the spool is insufficient to create a desired object." EX1011, 1:64-2:2. Specifically, "CPU 92 receives the modeling filament data," and "calculate[s]

whether a spool 42 or 56 contains enough filament to complete the job," and provides "[o]perator notification…, stating either that the filament is adequate to complete the job, or that the filament spool will need replacement and reloading during the process." EX1011, 5:26-37. Additionally, "CPU 92 receives the support filament data…, and uses it to provide operator information in the same manner as described above with respect to the modeling filament." EX1011, 5:55-64. A POSITA would have been motivated to implement Dahlin so that the CPU 92 also determines the amount of modeling and support filament required for completing the job in order to "calculate whether a spool 42 or 56 contains enough filament to complete the job." EX1011, 5:26-37. A POSITA have understood that in order to perform this calculation of whether there is sufficient filament to complete the job that is expressly disclosed by Dahlin would have beneficially included determining the amount of modeling and support filament required for completing the job so that the amount of material required for the job and the amount of material available could be compared. A POSITA would have further understood that the amount of support filament required for completing the job is an operational parameter specifying a support structure requirement. *Id.*

59. Indeed, Menchik suggests such an implementation of Dahlin's system by disclosing that the "controller may compute, for example, the amount of modeling material, support liquid, or combination of modeling and support materials required

for printing a given three-dimensional object" so that the "controller may determine whether the amount of modeling and/or support material in the available cartridges is sufficient to complete a three-dimensional object to be built or printed." EX1009, [0048]-[0049]. A POSITA would have been motivated to implement Dahlin's system in a manner that employs Menchik's suggestion (e.g., the controller computing the amount of support material required for printing a given 3D object) to thereby enable Dahlin's system to determine the amount of support filament required for completing the job (an operational parameter specifying a support structure requirement) in order to "calculate whether a spool… 56 contains enough filament to complete the job." EX1011, 5:26-37. Indeed, a POSITA would have recognized that determining if the spool contains sufficient filament to complete the job would have predictably involved a comparison of the amount of filament needed to complete the job with the amount of available filament on the spool.

1[c]. performing a diagnostic test to determine whether the operational parameter is suitable for the three-dimensional printer; and

60. As discussed above in element 1[b], in the predictable modification of Dahlin as suggested by Menchik described above, Dahlin's CPU 92 determines the amount of support filament required for completing the job (operational parameter specifying a support structure requirement) in order to "calculate whether a spool… 56 contains enough filament to complete the job" and provide "[o]perator

notification…, stating either that the filament is adequate to complete the job, or that the filament spool will need replacement and reloading during the process." EX1011, 5:26-37, 5:55-64, 1:64-2:2. A POSITA would have understood that calculating whether a spool contains enough support filament to complete the job is a diagnostic test to determine whether the amount of support filament required (operational parameter specifying a support structure requirement) is suitable for the printer to complete the print job. *Id.*; *see supra* Section IX.A.1.

1[d]. when the operational parameter is suitable for the three-dimensional printer according to the diagnostic test, controlling operation of the three-dimensional printer during the fabrication process with the controller according to the operational parameter to fabricate an object with the three-dimensional printer.

61. Dahlin discloses that the CPU 92 performs the diagnostic test described above in element 1[c] "[a]t the outset of a job" and before "the system enters a build state during which it creates the three-dimensional object." EX1011, 5:26-37, 6:28-39. "In forming an object, the modeling material is deposited in one or more layers on the substrate 60. The support material is then deposited in one or more layers over the modeling material. The object is then built up on the support material, using a plurality of layers of modeling and/or support material." EX1011, 8:14-20. Additionally, Menchik discloses that "[d]uring the printing process the controller may continue to monitor, for example, the status of the building material(s) remaining in one or more respective cartridge bags, the total amount of building

material of each type still required to complete the construction of one or more three dimensional objects, and the length of time remaining before each respective cartridge may need to be replaced by another cartridge in line etc." EX1009, [0050]. Based on Dahlin's and Menchik's disclosures describing continuing the printing process and monitoring the amount of support material required during the printing process after determining that the amount of support material required to complete the job (operational parameter) is suitable, a POSITA would have understood that when the amount of support filament required for completing the job (operational parameter specifying a support structure requirement) is suitable for the printer to complete the print job, the CPU 92 controls operation of the printer during fabrication of the object according to the amount of support filament required to complete the job (operational parameter) by, e.g., monitoring the amount of support material to complete construction (operational parameter) and replacing the cartridge during the fabrication process.

(b) Claim 4

4. The method of claim 1, wherein the data includes at least one of a material identification number, a build material type, a build material diameter, an extruder temperature requirement, a build material melting temperature, a build material color, a build material color lot number, a cost per unit of build material, a build material density, a build material tensile strength, a build material viscosity, a build material recycle code, and a build material expiration date.

62. The Dahlin-Menchik combination renders obvious claim 4 for the same

or substantially the same reasons that I discussed above at elements 1[a] and 1[b]. Specifically, Dahlin discloses that the data includes "type of filament." EX1011, 5:3-14. Additionally, Menchik discloses that the data includes "type of building material," "the materials color," and "recommended jetting temperature." EX1009, [0035].

(c) Claim 5

5. The method of claim 1, wherein the supply includes at least one of a cartridge, a spool, a filament, a number of pellets, and a liquid.

63. The Dahlin-Menchik combination renders obvious claim 5 for the same or substantially the same reasons that I discussed above at element 1[a]. Specifically, Dahlin discloses "filament of modeling material 40 from a modeling filament spool 42" and "filament of support material 54 from a support filament spool 56." EX1011, 2:60-64, 3:7-11.

(d) Claim 11

11. The method of claim 1, wherein the operational parameter further includes at least one of an extruder temperature and a feed rate.

64. As I discussed above in element 1[b], a POSITA would have been motivated to apply Dahlin's suggestion (e.g., the tag informing the control system of the proper extrusion parameters for dispensing the material) to thereby enable Dahlin's system to determine the proper extrusion parameters (operational parameters) for dispensing the material by reading the proper extrusion parameters

stored in the tag and to fabricate objects using the proper extrusion parameters for dispensing the material to achieve known benefits. EX1011, 1:51-58, 1:40-47. Dahlin further discloses that "material is selected and its temperature is controlled so that it solidifies upon extrusion or dispensing onto the base." EX1011, 1:10-13. In Dahlin, "the filaments of modeling and support materials are each a solid material which can be heated relatively rapidly above its solidification temperature, and which will very quickly solidify upon a small drop in temperature after being dispensed from the extrusion head." EX1011, 3:45-50. CPU 92 "sends and receives signals associated with modeling extrusion head 32," which includes "a heater 220 (HTR)" and "sends and receives signals to and from support extrusion head 46, which includes… a heater (HTR). EX1011, 4:58-67, 5:45-52. "Heater 220… heat[s] the tube to a temperature just above the melting temperature of the filament." EX1011, 10:14-16. A POSITA would have found it obvious that the proper extrusion parameters stored in the tag includes an extruder temperature so that the system could be controlled to heat the tube to a temperature that is sufficient to melt the filament, as expressly described by Dahlin.

65. Menchik makes this functionality of storing the proper extruder temperature in the tag even more express by suggesting an implementation that, when applied to Dahlin's system, would have resulted in a system the stores optimal operation parameters including a recommended jetting temperature in a memory

chip included on a cartridge of building material based on the express suggestions of Menchik. EX1009, FIG. 2, [0030], [0035], [0037], [0043]. Specifically, Menchik discloses "[m]emory chip 260 may, for example, store and/or record information relating to the material stored within cartridge 250, for example, the type of building material in the cartridge bag 300, the material's color, manufacturing date, optimal operation parameters (e.g., recommended jetting temperature), optimum building parameters (e.g., for building or support), and material parameters (e.g., viscosity and surface tension at the recommended temperature etc.) etc." EX1009, [0035]. Menchik's "[c]ontroller 105 may receive data from one or more material supply sources, and control the supply of building material to printing apparatus 140, for example, by controlling the extraction or flow of materials from the printing material sources, such as printing cartridges." EX1009, [0027], [0007]. A POSITA would have understood that the recommended jetting temperature is an extruder temperature.

66. A POSITA would have been motivated to implement Dahlin based on Dahlin's and Menchik's suggestions such that the proper extrusion parameters stored in the tag include an extruder temperature to thereby enable Dahlin's system to determine the proper extruder temperature for dispensing the filament by reading the extruder temperature stored in the tag and to control the heater to heat the tube to a temperature for dispensing the filament in order to fabricate objects using the

filament. Indeed, a POSITA would have been aware that heating the extruder to too low of a temperature would have been insufficient for melting the filament would heating the extruder to too high of a temperature would have lead to undesirable outcomes such as inconsistencies in the resulting object being fabricated.

(e) Claim 12

12[p]. A system, comprising:

67. The Dahlin-Menchik combination renders obvious element 12[p] for the same or substantially the same reasons that I discussed above at element 1[p] and 1[a].

12[a]. a three-dimensional printer;

68. The Dahlin-Menchik combination renders obvious element 12[a] for the same or substantially the same reasons that I discussed above at element 1[a].

12[b]. a coupling adapted to receive a supply of a build material;

69. Dahlin's "FIG. 7 shows a detailed exploded view of the filament spool and spindle shown in FIGS. 2 and 3." EX1011, 8:43-44.

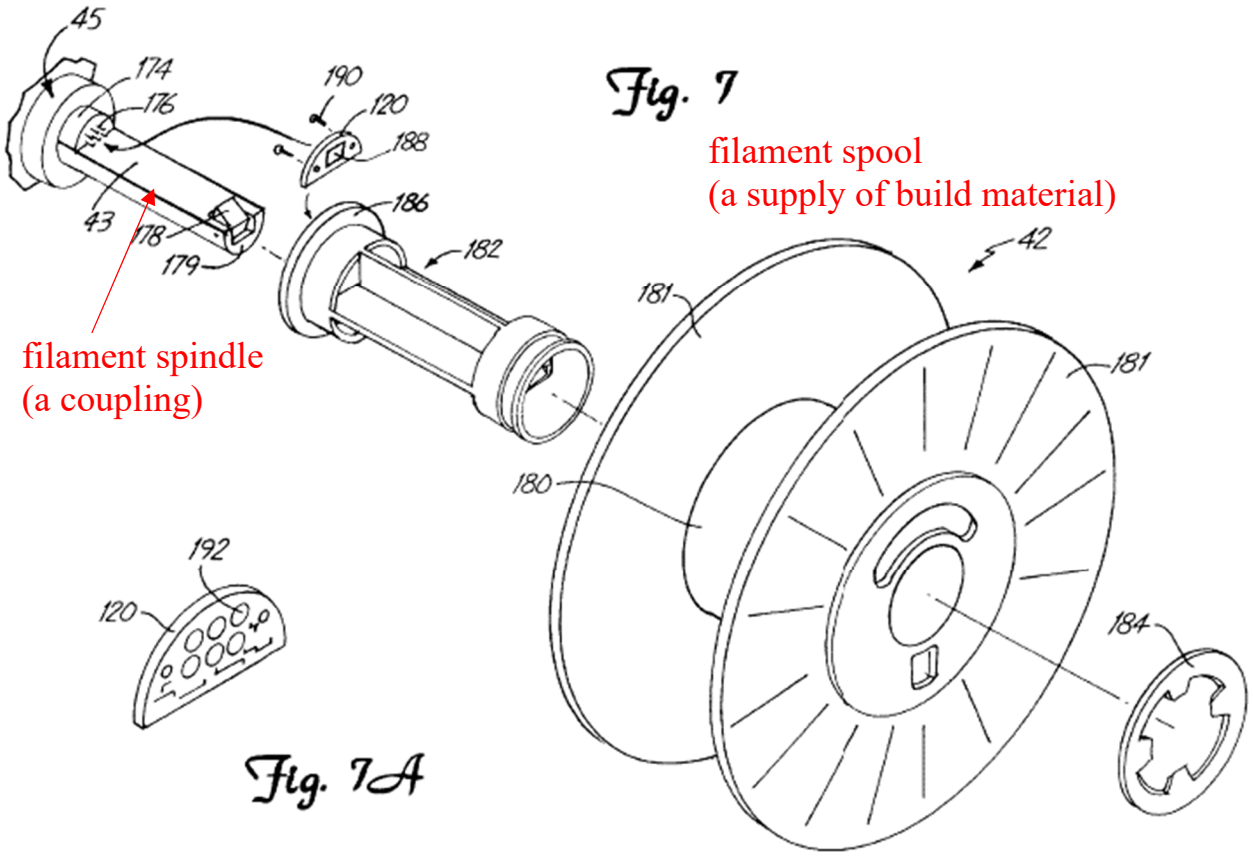

EX1011, FIG. 7. "The mechanical configuration of the filament spool and spindle is identical for both the modeling filament and the support filament." EX1011, 8:44-46. "Spindle 43 extends horizontally from drybox 45" of the rapid prototyping system. EX1011, 8:49-50. A "sleeve 182… fits within barrel 180 for receiving spindle 43," and the "filament spool 42 is manually inserted onto spool holder 43." EX1011, 8:54-59, 9:12-15. The spindle 43 is a coupling adapted to receive the filament spool 42 (a supply of build material).

12[c]. a tag sensor communicatively associated with the three-dimensional printer, the tag sensor configured to read data from a data tag associated with

the supply of the build material, the data including at least one property of the build material;

70. The Dahlin-Menchik combination renders obvious element 12[c] for the same or substantially the same reasons that I discussed above at element 1[a].

12[d]. a processor configured to determine an operational parameter of a fabrication process using the three-dimensional printer based upon the data and to perform a diagnostic test to determine whether the operational parameter is suitable for the three-dimensional printer, the operational parameter including at least one of a build platform temperature, a build volume temperature, an infill requirement, a rafting requirement, a support structure requirement, and a cooling requirement; and

71. As discussed above in element 1[a], Dahlin's rapid prototyping system includes an electrical system 90 that "controls the system 10" and a CPU 92 to "control the overall operation of the electrical system 90." EX1011, 4:30-6:6. The CPU (Central Processing Unit) is a processor. EX1009, [0026] ("Processor 110 may include conventional devices, such as a Central Processing Unit (CPU)."); EX1001, 4:1-21 ("All such computing devices and environments are intended to fall within the meaning of the term 'controller' or 'processor'."). As discussed above in Section IX.A.1 and elements 1[b] and 1[c], the predictable application of Menchik's suggestion to Dahlin's system provides a CPU or controller configured to determine the proper extrusion parameters, optimal operation parameters, optimum building parameters, material parameters, and supply parameters (operational parameters) based on the data stored in the tag, and to calculate whether a spool contains enough

support filament to complete the job (diagnostic test) to determine whether the amount of support filament required (operational parameter specifying a support structure requirement) is suitable for the printer to complete the print job.

12[e]. a controller for the three-dimensional printer, the controller configured to, when the operational parameter is suitable for the three-dimensional printer according to the diagnostic test, control operation of the three-dimensional printer during the fabrication process according to the operational parameter to fabricate an object with the three-dimensional printer.

72. As discussed above in element 1[d] (discussing operations controlled by CPU 92), Dahlin's CPU 92 controls operation of the printer during fabrication of the object according to the amount of support filament required to complete the job (operational parameter specifying a support structure requirement) when the amount of support filament required for completing the job is suitable for the printer to complete the print job. EX1001, 4:1-21 ("All such computing devices and environments are intended to fall within the meaning of the term 'controller' or 'processor'."). Additionally, Menchik describes a "controller 105" that includes "a Central Processing Unit (CPU)." EX1009, [0026]. A POSITA would have found it obvious to implement Dahlin's CPU 92 in a controller as suggested by Menchik to beneficially provide a printer that determines, tests, and uses the operational parameter for a fabrication process without the need for another external device to provide the operational parameter and test result to the printer. Indeed, the language of claim 17 encompasses such an implementation. EX1001, 24:61-64.

(f) Claim 13

13. The system of claim 12, further comprising a container holding the supply of the build material, wherein the container is configured to connect to the coupling, and wherein the container includes the data tag.

73. As I discussed above in elements 1[a] and 12[b], Dahlin describes "a modeling filament spool 42" and "a support filament spool 56," and each spool is coupled to a spindle (coupling) of the printer and has "an associated circuit for maintaining data regarding type and amount of filament on the spool." EX1011, 2:60-64, 3:7-11, 1:13-17, 1:61-64, 8:43-59, 9:12-15, FIG. 7. Indeed, the '464 patent discloses that the terms "supply," "container," and "spool" are used interchangeably: "The supply 302 may include any suitable container for build material 312, such as a spool of build material, a cartridge of filament, or a container of bulk material such as pellets, or a container of liquid, as well as combinations of these for a multi-modal printer." EX1001, 14:19-24.

(g) Claim 14

14. The system of claim 13, wherein the container includes at least one of a cartridge and a spool.

74. The Dahlin-Menchik combination renders obvious claim 14 for the same or substantially the same reasons that I discussed above at element 1[a].

(h) Claim 15

15. The system of claim 12, wherein the build material includes at least one of a filament, a number of pellets, and a liquid.

75. The Dahlin-Menchik combination renders obvious claim 15 for the

same or substantially the same reasons that I discussed above at element 1[a].

(i) Claim 16

16. The system of claim 12, wherein the processor is included on a remote network resource.

76. Dahlin discloses that "the design of a three-dimensional object 64 is input to CPU 92 via a LAN network connection (shown schematically in FIG. 5) utilizing CAD software such as QUICKSLICE® from Stratasys, Inc., which sections the object design into multiple layers to provide multiple-layer data corresponding to the particular shape of each separate layer." EX1011, 6:29-35. Thus, Dahlin contemplates that its rapid prototyping system communicates with a remote network resource, which includes a processor executing CAD software, that provides the multi-layer data for fabricating the object. A POSITA would have found it obvious to implement Dahlin such that the processor included on the remote network resource determines an operational parameter and performs the diagnostic test.

77. Indeed, Menchik suggests such an implementation by disclosing that "a separate unit, such as a personal computer or workstation… may provide some control or data storage capability." EX1009, [0021]. Specifically, "[c]ontroller 105 may include a CAD system," "may utilize Computer Object Data (COD) representing an object or a model, such as CAD data in Stereo Lithography (STL) format," "may convert such data to instructions for the various units within 3D

printer system 100 to print a 3D object" and "may be located… outside of printing apparatus 100. Controller 105 may be located outside of printing system 100 and may communicate with printing system 100, for example, over a wire and/or using wireless communications." EX1009, [0024]. "Controller 105 may be included within, or may include, a computing device such as a personal computer, a desktop computer, a mobile computer, a laptop computer, a server computer, or workstation (and thus part or all of the functionality of controller 105 may be external to 3D printer system 100)." EX1009, [0026]. As discussed in Section IX.A.1 and elements 1[b] and 1[c], Menchik discloses that this controller in a separate unit determines operational parameters.

78. Based on Menchik's teaching, a POSITA would have found it an obvious design choice to implement the functionality of determining an operational parameter and performing a diagnostic test in a processor that is included on a remote network resource. A POSITA would have been motivated to provide such an implementation to beneficially enable the CAD software executing on the processor of the remote system to determine the operational parameters and to calculate whether a spool contains enough support filament to complete the job (diagnostic test) to determine whether the amount of support filament required (operational parameter specifying a support structure requirement) is suitable for the printer to complete the print job before providing the design to the CPU of the rapid

prototyping system. Doing so would allow the user of the CAD software to generate a design using specific materials more quickly and efficiently. This would have included allowing the user of the remote CAD system to make design choices based on the received material parameters and determined operational parameters. Such an implementation also would have reduced the computational strain on the local CPU 92, thus allowing the three-dimensional printer to be operated with a smaller, and less expensive CPU.

(j) Claim 17

17. The system of claim 12, wherein the processor is included on one or more of the controller and the three-dimensional printer.

79. The Dahlin-Menchik combination renders obvious claim 17 for the same or substantially the same reasons that I discussed above at elements 12[d] and 12[e].

B. GROUND 1B—Claims 2, 3, 6, 10, 18, and 19 are obvious over Dahlin, Menchik, and Loughran

1. Dahlin-Menchik-Loughran Combination

80. Based on my knowledge and experience in the field and my review of Dahlin, Menchik, and Loughran, by the relatively late timeframe leading up to 2013, it is clear that a POSITA would have been motivated to implement each of Dahlin's drybox processor boards 116 and 132 as a RF reader and to include each of Dahlin's EEPROM boards 120 and 136 in a RFID tag as suggested by Loughran's teachings.

Indeed, multiple reasons would have motivated a POSITA to make this combination.

81. As a ***first*** reason, , a POSITA would have recognized multiple benefits that would have arisen from use of been motivated to RFID technology in the Dahlin-Menchik system including the benefit that use of RFID would have provided added value of identification and thus a POSITA would have been motivated to apply the teachings of Loughran to the system of Dahlin-Manchik. Use of RFID technology was rather ubiquitous by the time frame of the '464 patent and a POSITA would have known that RFID tags and the corresponding RFID readers would have provided for wireless, non-contact communication of the relevant material information within a limited distance. A POSITA also would have been aware that conventional semiconductor memory (such as that discussed by Dahlin) would have generally required the printer to have electrical contact with the memory to transfer data to the printer. *See e.g.* EX1015, [0026]. Therefore, a POSTIA would have recognized that , because RFID technology requires no physical contact, tag placement of the resulting system would have been less constrained compared to a system that relied on physical contact with a memory device attached to a particular material supply or material supply container. EX1007, 3. Additionally, A POSITA would have known that RFID tags were generally more durable and less sensitive to adverse conditions such as dust, chemicals, physical damage, etc. For example, RFID tags were generally implemented to include a waterproof or water resistant

outer container to protect such tags from the elements because they did not require physical connector components to be exposed for direct, physical contact. And, as I discussed above in the previous paragraph, such RFID technology was well-known and in widespread use and therefore would have been a straightforward and inexpensive solution to providing a memory chip for a build material container. This would have been especially true in cases where the containers were disposable.

82. As a ***second*** reason, the use of RFID technology for Dahlin-Menchik's memory chip and memory chip reader would have been an obvious design choice. I have reviewed a number of publications that collectively demonstrate that use of RFID tags to store data regarding printing materials was well-known at the time of the '464 patent. EX1007; EX1004, [0020]-[0021], [0047]; EX1012, [0017], [0024]; EX1013, [0008], [0063]; EX1014, [0040]; EX1015, [0020], [0022]-[0026]; EX1016, [0049], [0054], [0068]-[0069]. Due to the relative ubiquity RFID tag technology during the relevant time frame, a POSITA would have known that using RFID tags and RFID readers to convey the above discussed information regarding deposition material would have been straight forward and relatively simple to implement with a high degree of both reliability and durability.

83. Additionally, such an implementation of Dahlin-Menchik's system based on Loughran's suggested techniques would have been merely the application of known techniques to a known system ready for improvement to yield predictable

results. Here, the systems of Dahlin, Menchik, and Loughran are each related to storing and using build material data for fabricating three-dimensional objects, which is the same technology at issue in the '464 patent. EX1004, [0020]-[0021], [0033], [0047]; EX1009, [0030], [0037], [0043]; EX1011, 5:3-14, 5:55-64, Abstract, 1:13-17, 1:40-2:2, 11:26-28, 12:13-14, 12:41-46; EX1001, 1:23-25, 1:29-33, 14:30-32, 14:32-15:10, 15:11-17. In this context, a POSITA was not an automaton and instead would have possessed ample skill to successfully implement the combination as described above and thus would have reasonably expected success achieving the combination.

2. Claim Element Analysis

(a) Claim 2

2. The method of claim 1, wherein the tag includes at least one of a radio frequency identification (RFID) tag, an optically-identifiable tag, a magnetically-identifiable tag, and a mechanical feature of the supply.

84. Dahlin discloses that modeling drybox processor board 116 is a tag sensor that reads data from the EEPROM board 120, which "acts as an electronic tag," attached to modeling material filament spool 42 (a supply of build material) and support drybox processor board 132 is a tag sensor that reads data from the EEPROM board 136, which "acts as an electronic tag," attached to support material filament spool 56 (a supply of build material). EX1011, 5:3-14, 5:55-64. As discussed above in Section IX.B.1, a POSITA would have found it obvious and

straightforward to implement each of Dahlin's drybox processor boards 116 and 132 as a RF reader and to include each of Dahlin's EEPROM boards 120 and 136 in a RFID tag. Indeed, Loughran suggests such an implementation of Dahlin's system by disclosing a build material container containing a RFID tag, and a RF reader to detect signals returned by the RFID tag. EX1004, [0020]-[0021], [0047]. A POSITA would have understood that a RFID tag includes a memory chip such as an EEPROM (electrically erasable programmable read-only memory) and associated circuit board such as an EEPROM board. EX1007, 3.

(b) Claim 3

3. The method of claim 1, wherein the tag sensor includes at least one of a radio frequency identification (RFID) reader, an optical scanner, a magnetic reader, and a contact point sensor.

85. The Dahlin-Menchik-Loughran combination renders obvious claim 3 for the same or substantially the same reasons that I discussed above at claim 2.

(c) Claim 6

6. The method of claim 1, wherein the tag includes a radio frequency identification (RFID) tag, and the RFID tag is at least one of a passive RFID tag and an active RFID tag.

86. As I discussed above in claim 2, POSITA would have found it obvious to include Dahlin's EEPROM board in an RFID tag that is read by an RFID reader. A POSITA would have understood that an RFID tag is either passive or active because RFID tags are of one of two types: passive or active. EX1007, 1.

(d) Claim 10

10. The method of claim 1, wherein the operational parameter is based upon a build material identification number contained in the data.

87. Dahlin describes a prior art system with a "rod dispensing cassette having an electronically readable and writeable memory device that provides data to the control system." EX1011, 1:48-51. "The memory device serves as an electronic tag which informs the control system of the type of material that is in the cassette, the proper extrusion parameters for dispensing the material, the current number of rods in the cassette, and the cassette serial number." EX1011, 1:51-58, 1:40-47. A POSITA would have been motivated to apply Dahlin's suggestion (e.g., the tag informing the control system of the cassette serial number) to thereby enable Dahlin's system to use the cassette serial number to determine additional information regarding the material not stored on the tag. *Id.*

88. Loughran also suggests such an implementation of Dahlin's system by disclosing using a unique material identifier to request information regarding the material from a material information server over a network. EX1004, [0022], [0031] (example in which the material identifier is a number). In Loughran, such information may include parameters of the material, including "melting temperature, storage temperature, minimum feature size, horizontal and vertical shrinkage rates, material lifetime, inter-layer delay time, and amount of ultraviolet (UV) light

required per layer." EX1004, [0024], [0002]. Menchik also describes "[b]uild material information" that includes "material density, material mass per volume, and other suitable data from which material status may be computed." EX1009, [0035]. A POSITA would have been motivated to apply Loughran's suggestion (e.g., using a material identifier to request information regarding the material not stored on the tag, including minimum feature size and horizontal and vertical shrinkage rates) to thereby enable Dahlin-Menchik's system to determine the amount of support filament required for completing the job (an operational parameter specifying a support structure requirement) based on material parameters including minimum feature size, horizontal and vertical shrinkage rates, and material density retrieved using the material identifier or serial number. EX1011, 5:26-37; EX1009, [0048]-[0049]; EX1004, [0024], [0002]. A POSITA would have been motivated to provide such an implementation in order to accurately calculate the amount of support filament required for completing the job. Such an implementation also would have allowed information regarding a material to be updated, even after the material has been sold, without needing to update or replace each individual tag.

(e) Claim 18

18. The system of claim 12, wherein the tag sensor includes at least one of a radio frequency identification (RFID) reader, an optical scanner, a magnetic reader, and a contact point sensor.

89. The Dahlin-Menchik-Loughran combination renders obvious claim 18

for the same or substantially the same reasons that I discussed above at claim 2.

(f) Claim 19

19[p]. A method, comprising:

90. The Dahlin-Menchik-Loughran combination renders obvious element 19[p] for the same or substantially the same reasons that I discussed above at element 1[p].

19[a]. reading first data from a tag included on a supply of a build material using a tag sensor associated with a three-dimensional printer, the first data related to the build material;

91. The Dahlin-Menchik-Loughran combination renders obvious element 19[a] for the same or substantially the same reasons that I discussed above at element 1[a] and claim 10.

19[b]. retrieving second data from a data store, the second data including additional data related to the build material;

92. The Dahlin-Menchik-Loughran combination renders obvious element 19[b] for the same or substantially the same reasons that I discussed above at claim 10.

19[c]. combining the first data and the second data;

93. The Dahlin-Menchik-Loughran combination renders obvious element 19[c] for the same or substantially the same reasons that I discussed above at element 1[a] and claim 10.

19[d]. determining an operational parameter to configure the three-dimensional printer for a fabrication process using the build material based upon the combination of the first data and the second data;

94. The Dahlin-Menchik-Loughran combination renders obvious element 19[d] for the same or substantially the same reasons that I discussed above at element 1[b] and claim 10.

19[e]. performing a diagnostic test to determine whether the operational parameter is suitable for the three-dimensional printer; and

95. The Dahlin-Menchik-Loughran combination renders obvious element 19[e] for the same or substantially the same reasons that I discussed above at element 1[c].

19[f]. when the operational parameter is suitable for the three-dimensional printer according to the diagnostic test, controlling operation of the three-dimensional printer during the fabrication process according to the operational parameter to fabricate an object with the three-dimensional printer.

96. The Dahlin-Menchik-Loughran combination renders obvious element 19[f] for the same or substantially the same reasons that I discussed above at element 1[d].

C. GROUND 2—Claims 1-6, 10-15, and 17-19 are obvious over Loughran in view of Toshiki

1. Loughran-Toshiki Combination

97. Based on my knowledge and experience in the field and my review of Loughran and Toshiki, by the relatively late timeframe leading up to 2013, it is clear that a POSITA would have been motivated to implement Loughran's system based

on the suggestions of Toshiki to include additional functionality of comparing the current remaining amount of the material in the cartridges with the cumulative amount of the modeling material to be used in modeling process, and displaying the determination result, including an indication that the tank needs to be replaced, on a display screen before modeling process is started for purposes of achieving several known benefits that I articulate in further detail below. Such an implementation of Loughran's system based on the teachings of Toshiki would have enabled the resulting system to determine the amount of the modeling material to be used in the modeling process and provide the user with a notification either that the amount of material in the cartridges is adequate for the modeling process or that the cartridge will need replacement and reloading during the modeling process. EX1024, [0110]-[0111], [0121], [0139], [0015], [0017] FIG. 10A; EX1011, 5:26-37. Indeed, multiple reasons would have motivated a POSITA to make this combination.

98. One reason that would have motivated a POSITA to apply Toshiki's suggestion to Loughran in the above described manner is that such a configuration would have "ensure[d] continuous and uninterrupted supply of required material(s) to a 3D printing apparatus" and to "negate the necessity for manual monitoring of materials and on-hand replacement of containers during printing." EX1009, [0017]. A POSITA would have recognized that ensuring continuous and uninterrupted supply of materials without the need for manual monitoring the material supplies

would have increased the ease of use of the resulting system and overall efficiency of the system. Thus, a POSITA would have found it desirable to implement the resulting system based on the suggestions of Toshiki to determine "based on expected usage of material and actual availability of materials, …the length of time remaining until one or more cartridges may be expected to empty, and should therefore be replaced" and to display the relevant information on a computer screen as information included in the operator notification. EX1009, [0049]. A POSITA would have been motivated to implement Loughran's system in this predictable manner to beneficially provide the operator with the opportunity to respond to the notification before the printing begins by, for example, making modifications to the printing file (e.g., to create a design that would use less material) or replacing the support material cartridge with a cartridge that contains enough support material to complete the job before printing begins instead of replacing and reloading the cartridge during the printing process. EX1024, [0014], [0023], [0009]-[0010], [0123], [0183]. A POSITA would have recognized that preventing interruption of the printing process in such a manner would have improved the through processing time of print jobs allowing for more dependable scheduling of consecutive print jobs.

99. Additionally, Loughran and Toshiki are directed toward highly similar subject matter, with each reference describing a system for fabricating three-dimensional objects; the same technology at issue in the '464 patent. EX1004,

[0001], [0013], [0016]; EX1024, [0026]; EX1001, 2:1-5, 3:21-27. In light of these similarities, a POSITA would have possessed ample skill to successfully implement the combination as I have described above. Such an implementation of Loughran's system based on Toshiki's suggested techniques would have been merely the application of known techniques to a known system ready for improvement to yield predictable results. Based upon my knowledge and experience in this field and my review of Loughran and Toshiki, I am confident a POSITA would have recognized that this modification would have yielded predictable results and required only routine adjustments to the software to provide the additional functionality disclosed by Toshiki and as such a POSITA would have had a reasonable expectation of success in making such modifications. This modification would not have significantly altered or hindered the functions performed by Loughran's system, and these modifications would have been within the predictable and ordinary level of skill of a POSITA (certainly by a time frame as late as 2013).

2. Claim Element Analysis

(a) Claim 1

1[p]. A method, comprising:

100. Loughran's FIGS. 3 and 4 each show "a flowchart of a method performable by an SFF system to obtain information regarding a material based on a material identifier of the material." EX1004, [0007], [0032], [0040].

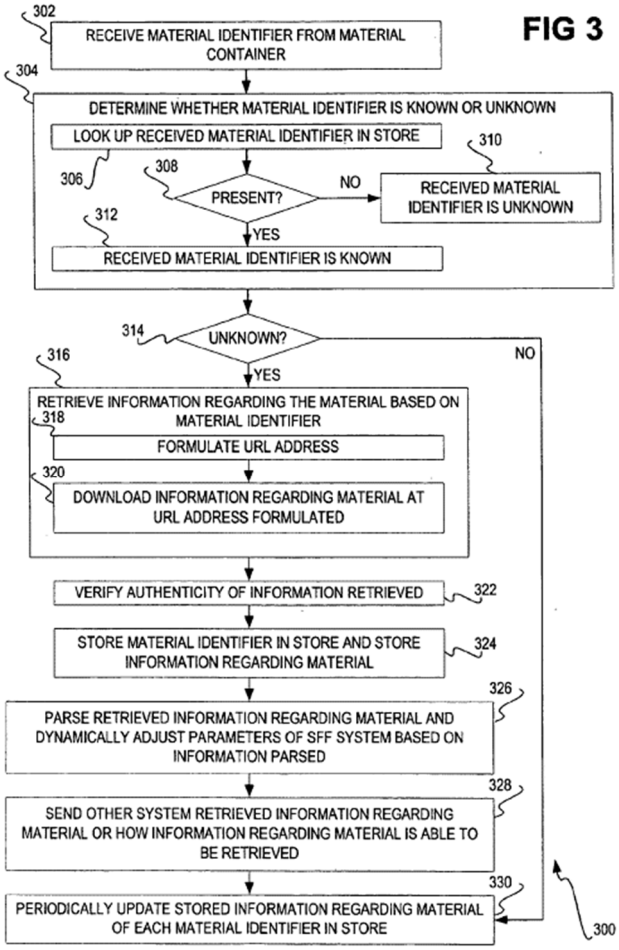

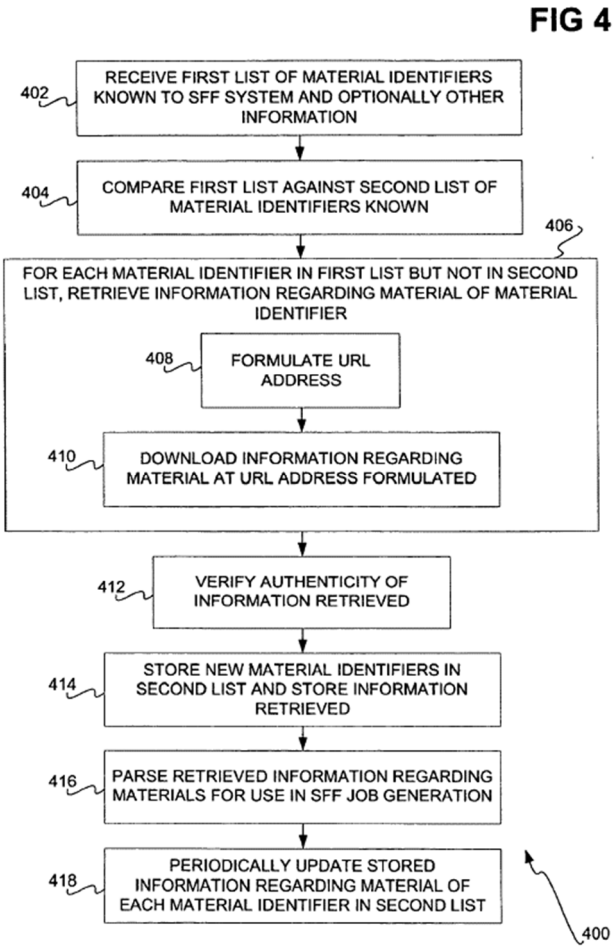

EX1004, FIGS. 3 and 4. A POSITA would have recognized that these and other functions described in Loughran are methods.

1[a]. reading data from a tag included on a supply of a build material using a tag sensor in communication with a controller of a three-dimensional printer, the data including at least one property of the build material;

101. Loughran discloses that "solid freeform fabrication (SFF) encompasses technologies that are employed to fabricate physical objects directly from computer-aided drafting (CAD) data sources. SFF is also referred to as freeform fabrication (FFF), rapid prototyping, and layered manufacturing. In SFF, physical objects are

fabricated in a layer-by-layer manner. The material of each layer is bonded to the material of the immediately adjacent layers." EX1004, [0001]. Loughran's FIG. 1 shows a system 100 including a SFF system 104 that fabricates SFF jobs received from client system 102. EX1004, [0001], [0005], [0012].

FIG 1

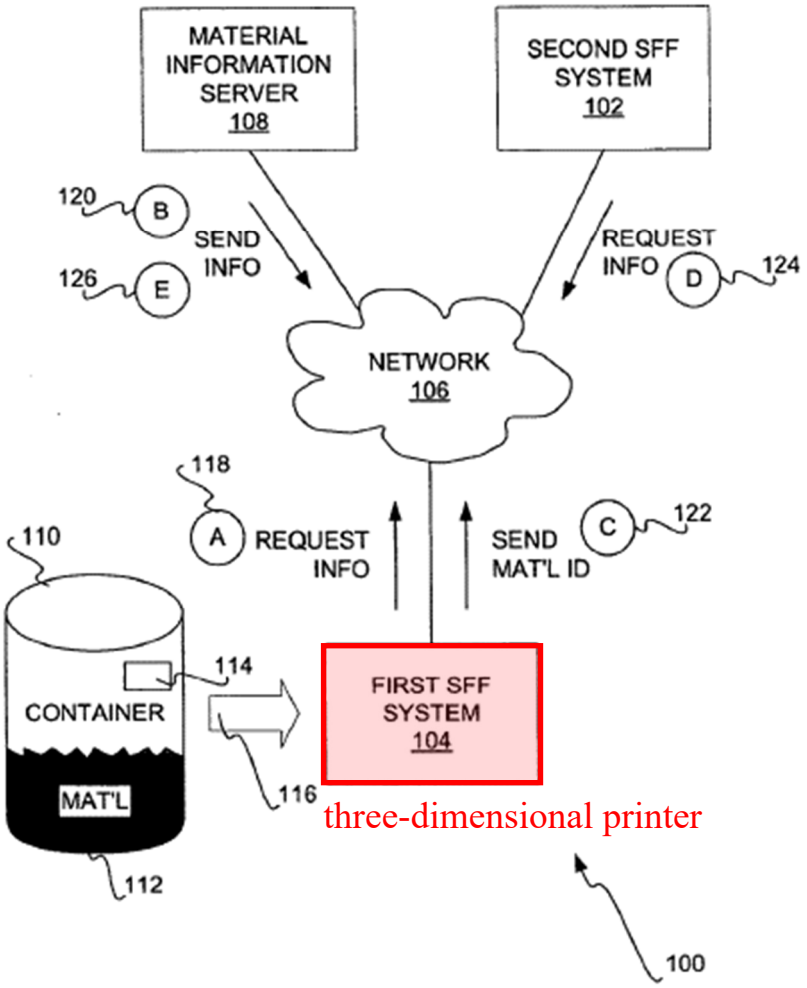

EX1004, FIG. 1. Loughran explains that the "SFF system 104 fabricates physical objects from SFF fabrication jobs in a layer-by-layer manner." EX1004, [0013]. The

SFF system 104 "may be or include in particular one or more of: a selective laser sintering SFF system, a stereo lithography SFF system, a wide-area thermal inkjet SFF system, a fused deposition modeling SFF system, a single jet inkjet SFF system, a three-dimensional printing SFF system, and a laminated object manufacturing SFF system, among other types of SFF systems." EX1004, [0013]-[0019], [0045]. Based on my knowledge and experience in the field and my review of Loughran, a POSITA would have understood that the SFF system 104 is a three-dimensional printer.

102. Loughran's three-dimensional printer also includes the claimed tag sensor in the form of a "communication mechanism 506" that "receives the unique material identifier from the material container 110 containing the material 112 and that is presented to the second SFF system 104. The mechanism 506 may include an RF reader to detect signals returned by the tag 114 of the container 110, where the tag 114 is an RFID tag. The mechanism 506 may further include a bar code reader to scan a bar code of the tag 114, where the tag 114 is a bar code tag." EX1004, [0047]. This communication mechanism 506 is shown as being part of the First SFF system 104 (the three-dimensional printer) in FIG. 5. EX1004, [0047].

FIG 5

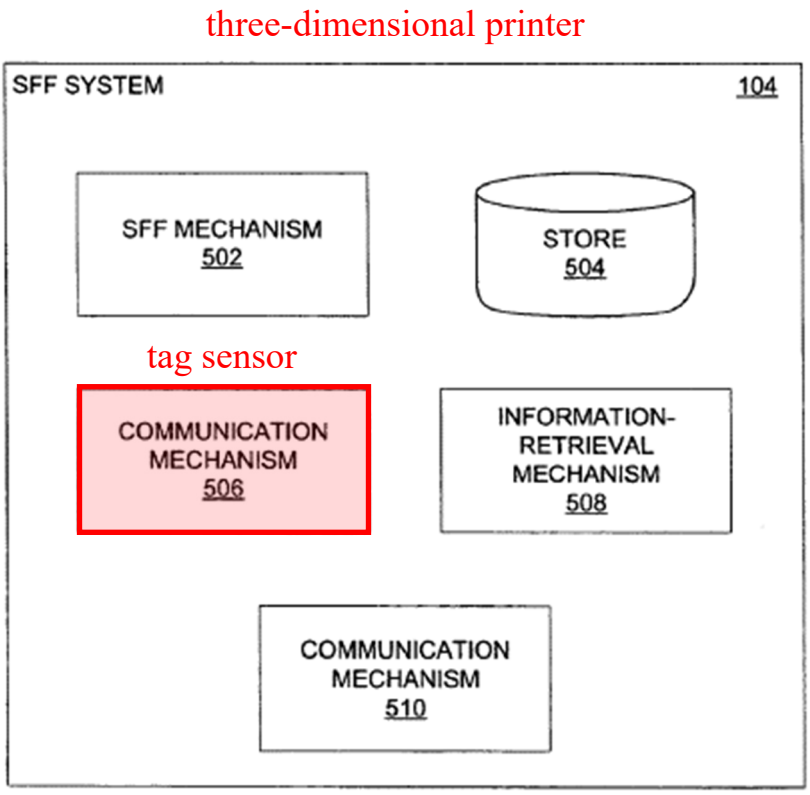

EX1004, FIG. 5. Based on my knowledge and experience in the field and my review of Loughran, a POSITA would have understood that the mechanism 506 is a tag sensor.

103. The SFF system 104 also includes an "information-retrieval mechanism 508" that "retrieves from the material information server 108 over the network 106 the information regarding the material 112 contained in the material container 110" and a "SFF mechanism 502" that "dynamically adjust[s] its parameters based on this information so that physical objects can be fabricated from the material 112." EX1004, [0048], [0045]. Loughran discloses that the "mechanisms 502, 506, and

508 may each be hardware or a combination of hardware and software." EX1004, [0044]. The SFF system 104 performs a method that is "implemented as one or more computer program parts of a computer program stored on a computer-readable medium" where the SFF system 104 "receives the material identifier from the tag 114 of the material container 110 (302)," "retrieves information regarding the material 112… based on the material identifier (316)," "parses the retrieved information regarding the material 112 to, for instance, extract parameters regarding the material 112, and dynamically adjusts its own parameters based on parameters extracted (326)" "so that physical objects can be properly fabricated from the material 112." EX1004, [0032]-[0037]. Based on Loughran's disclosure, a POSITA would have understood or found obvious that Loughran's SFF system 104 includes hardware implementing a controller in communication with the tag sensor and executing the computer program to perform the described method.

104. As demonstrated by FIG. 1 of Loughran, "a material container 110 containing a material 112 from which physical objects can be fabricated at the second SFF system 104 in accordance with SFF fabrication jobs generated at the [client] system 102 is introduced into the second SFF system 104, as indicated by the arrow 116." EX1004, [0020].

FIG 1

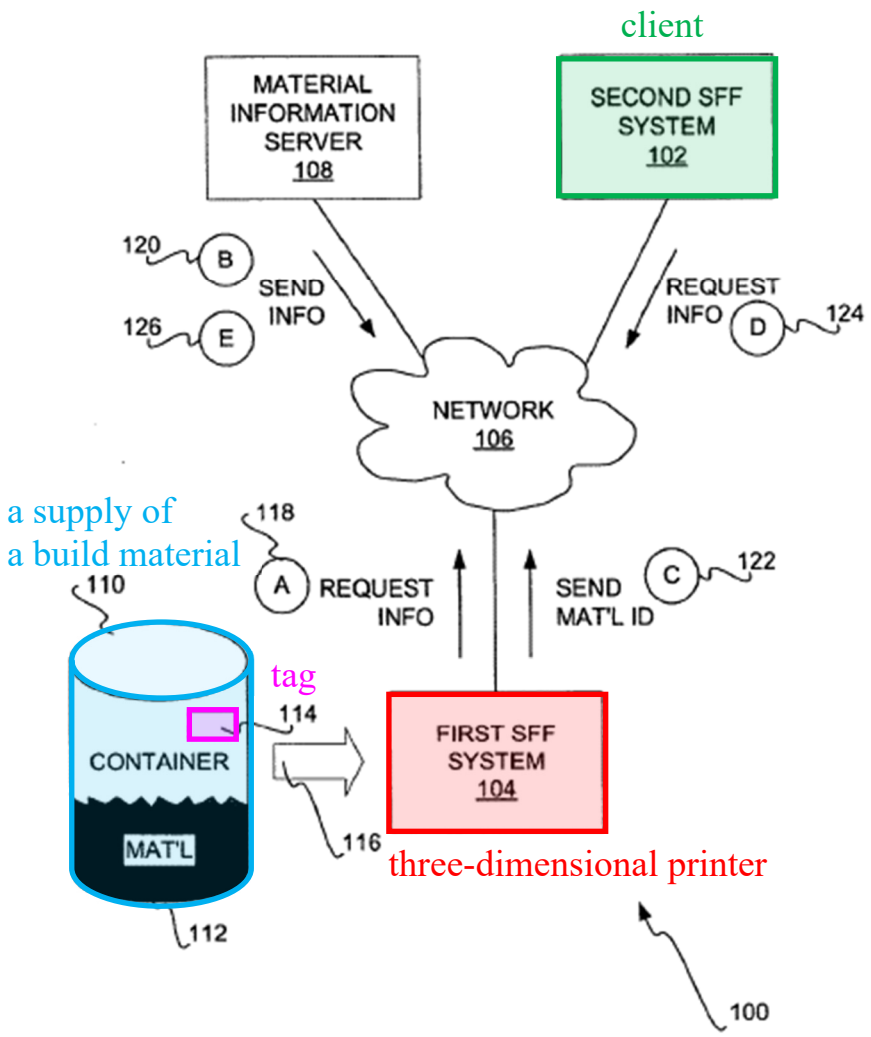

EX1004, FIG. 1. Loughran describes that the material can be "a vat of liquid photopolymer" EX1004, [0015]-[0016]. Loughran describes that "[t]he materials are held in a melted liquid state in reservoirs. The liquids are fed to individual jetting heads that squirt tiny droplets of the materials in the required pattern as they are moved to form a layer of the object." *Id.* In another example, the material is "a plastic filament [that] is unwound from a coil and supplies material to an esxtrusion

nozzle" that heats the material to melt it and deposit it in layers. *Id.*, [0017]. Based on my knowledge and experience in the field and my review of Loughran, a POSITA would have understood that the material container 110 containing material 112 is a supply of build material and is coupled to the SFF system 104 (three-dimensional printer) through introduction of the material container 110 into the SFF system 104.

105. Loughran also discloses that the container holding the build material includes a tag that stores at least one property of the build material. Loughran describes that "[t]he material 112 may be a new, and thus unknown, or already known material." EX1004, [0020]. Therefore, in order to allow the system to accurately identify the material 112 contained within the material container 110, the "material container 110 ***contains a tag 114 that includes a material identifier*** that is unique among material identifiers of different containers containing other materials. Based on the material identifier of the tag 114, the second SFF system 104 is able to recognize the material 112 being introduced thereinto." EX1004, [0020]. Loughran discloses that "the material identifier 204 of the material 112 retrieved from the tag 114 of the material container 110 may be '101785'." EX1004, [0031]. The material identifier is a material identification number. Based on my knowledge and experience in the field and my review of Loughran, a POSITA would have understood that the material identification number is a property of the build material. Indeed, the '464 patent discloses that the tag stores data that "may characterize at

least one property of the build material 312. For example, characteristic data stored on the data tag 304 may include at least one of a material identification number…." EX1001, 14:56-15:3. Based on Loughran's disclosure, a POSITA would have recognized that the material identifier identifies either the type of material or the specific batch of material (e.g., each container has a unique identifier rather than each particular material having a unique identifier).

106. Loughran discloses that "in one embodiment, the tag 114 may be a radio-frequency identifier (RFID) tag that returns a signal encoding the unique material identifier of the material 112 when sent a transmitting signal. The second SFF system 104 in such an embodiment detects the signal, and decodes the unique material identifier from the signal. In another embodiment, the tag 114 may be a bar code tag having a bar code encoding the unique material identifier of the material 112. The second SFF system 104 in this embodiment scans the bar code, and decodes the unique material identifier from the bar code. In a different embodiment, the tag 114 may have the unique material identifier of the material 112 printed thereon. The second SFF system 104 may therefore have optical character recognition (OCR) capabilities to recognize the unique material identifier." EX1004, [0021].

1[b]. determining an operational parameter of a fabrication process using the three-dimensional printer based upon the data, the operational parameter including at least one of a build platform temperature, a build volume

temperature, an infill requirement, a rafting requirement, a support structure requirement, and a cooling requirement;

107. As discussed in 1[a], Loughran's SFF system 104 "receives the material identifier from the tag 114 of the material container 110 (302)," "retrieves information regarding the material 112 from the material information server 108 over the network 106, based on the material identifier (316)," "parses the retrieved information regarding the material 112 to, for instance, extract parameters regarding the material 112, and dynamically adjusts its own parameters based on parameters extracted (326)" "so that physical objects can be properly fabricated from the material 112." EX1004, [0032]-[0037], [0045], [0048]. Loughran discloses that "the information retrieved by the second SFF system 104 regarding the material 112 may include information… by which the second SFF system 104 is automatically and dynamically adjusted for utilization with the material 112. Such information may include parameters of the material 112, including, but not limited to, melting temperature, storage temperature, minimum feature size, horizontal and vertical shrinkage rates, material lifetime, inter-layer delay time, and amount of ultraviolet (UV) light required per layer, among other parameters." EX1004, [0024]. "These parameters may include the operating temperature that the second SFF system 104 needs to achieve to melt the material, the temperature that the second SFF system 104 needs to maintain to store the material, the length of time to wait after one layer

of the material has been fabricated before processing the next layer, and so on." EX1004, [0025]. A POSITA would have understood that Loughran's parameters are operational parameters of a fabrication process and are retrieved based on the material identification number (tag data including at least one property of the build material).

108. Additionally, Toshiki discloses "modeling parameters such as the type of modeling material, the thickness of the modeling material layer, scanning speed, and the like." EX1024, [0029]. A POSITA would have found it obvious to implement Loughran's parameters that are retrieved based on the material identification number to include modeling parameters such as the type of modeling material, the thickness of the modeling material layer, and the scanning speed, as suggested by Toshiki. Such an implementation would have beneficially provided additional information for conducting a successful fabrication process, as discussed below. *Id.*

109. Toshiki discloses that the three-dimensional modeling device (three-dimensional printer) calculates "an estimated amount of modeling material to be used in the modeling process" and "the amount of modeling material used can be estimated on the basis of modeling data including modeling parameters such as the thickness of the modeling material layer and the scanning speed." EX1024, [0095], [0085], [0015]. "The estimated amount of modeling materials used is made up of

an estimated amount of model material M used and an estimated amount of support material S used, each of which is calculated on the basis of the modeling data." EX1024, [0090]. A POSITA would have been motivated to implement Loughran so that the SFF system 104 also determines the amount of model material and support material to be used in the modeling process based on modeling parameters that are retrieved using the material identification number, based on Loughran's and Toshiki's suggestions. *Supra* Section IX.C.1. In the predictable combination of Loughran and Toshiki, a POSITA would have understood that the amount of support material to be used in the modeling process is an operational parameter specifying a support structure requirement and is determined based on modeling parameters that are retrieved using the material identification number (tag data including at least one property of the build material). *Id.*

1[c]. performing a diagnostic test to determine whether the operational parameter is suitable for the three-dimensional printer; and

110. Toshiki discloses that the three-dimensional modeling device includes "remaining amount detecting unit 405" and "a tank replacement determining unit 406." EX1024, [0100], [0013]. "The remaining amount detecting unit 405 detects the remaining amount of the modeling material in the modeling material storage tank, and outputs the detection result to the tank replacement determining unit 406." EX1024, [0109]. "Specifically, the remaining amount of model material M in each

model material cartridge 13M and the remaining amount of support material S in each support material cartridge 13S are detected." *Id.* "The estimated amount of modeling materials used is made up of an estimated amount of model material M used and an estimated amount of support material S used, each of which is calculated on the basis of the modeling data. In addition, a cumulative usage amount is calculated on the basis of the modeling data by adding up the estimated usage amount of the model material M and the support material S required to form each slice layer and the estimated usage amount in the purging process." EX1024, [0090]. "The tank replacement determining unit 406 determines whether or not the modeling material storage tank needs to be replaced while performing model processing on the basis of the remaining amount detected by the remaining amount detecting unit 405, and outputs the determination result to the display unit 122. The determination of whether or not the tank needs to be replaced is made by comparing the current remaining amount of the model material M and the support material S with the cumulative amount of the modeling material to be used in model processing." EX1024, [0110], [0139], [0015], [0017]. "The display unit 122 displays the determination result by the tank replacement determining unit 406 on the screen at least before model processing is started," and "if it is determined that the support material cartridge 13S or the model material cartridge 13M must be replaced during model processing, a message is displayed indicating that the tank needs to be

replaced." EX1024, [0111], [0121].

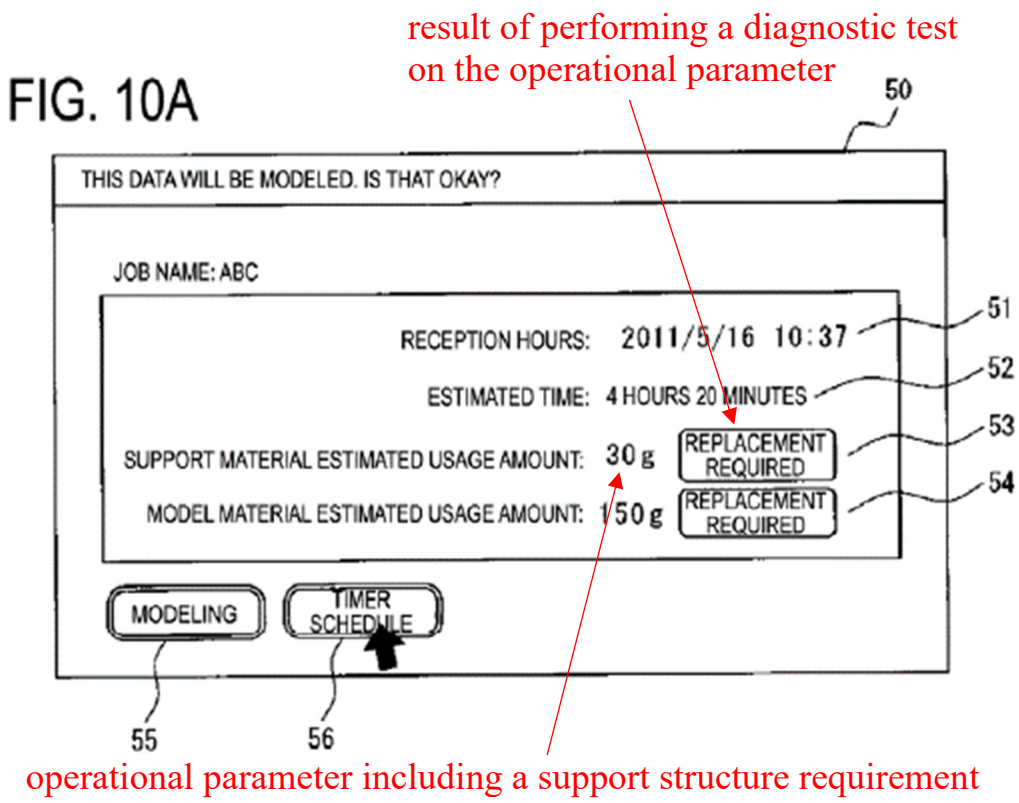

EX1024, FIG. 10A. "With this configuration, the determination result of whether or not the tank needs to be replaced is displayed before performing model processing, so the user can recognize in advance whether or not the modeling material storage tank needs to be replaced during model processing." EX1024, [0014], [0023], [0009]-[0010]. "Therefore, the user can start model processing after replenishing the modeling material by replacing the modeling material storage tank that is estimated to require replacement." EX1024, [0123], [0183].

111. In the predictable modification of Loughran as suggested by Toshiki, Loughran's SFF system 104 compares the current remaining amount of the model

material M and the support material S with the cumulative amount of the modeling material to be used in model processing and displays the determination result, including an indication that the tank needs to be replaced, on a display screen before model processing is started. EX1024, [0110]-[0111], [0121], [0139], [0015], [0017] FIG. 10A. A POSITA would have understood that determining whether the modeling material storage tank needs to be replaced while performing model processing is a diagnostic test to determine whether the amount of support material to be used in the modeling process (operational parameter specifying a support structure requirement) is suitable for the printer to complete the print job. *Id.*; *see supra* Section IX.C.1.

1[d]. when the operational parameter is suitable for the three-dimensional printer according to the diagnostic test, controlling operation of the three-dimensional printer during the fabrication process with the controller according to the operational parameter to fabricate an object with the three-dimensional printer.

112. Toshiki discloses that the three-dimensional modeling device performs the diagnostic test described above in element 1[c] "before model processing is started" "so the user can recognize in advance whether or not the modeling material storage tank needs to be replaced during model processing." [0111], [0121], [0014], [0023], [0033], [0009]-[0010]. "Therefore, the user can start model processing after replenishing the modeling material by replacing the modeling material storage tank that is estimated to require replacement." EX1024, [0123], [0183].

113. With respect to controlling operation of the printer, Loughran's SFF system 104 includes "SFF mechanism 502" that "fabricates a physical object directly from the CAD information of a SFF fabrication job received from the [client] system 102, in a layer-by-layer manner.… The SFF mechanism 502 can fabricate the physical object from the material 112, since the parameters of the second SFF system 104 are dynamically adjustable based on the information regarding the material 112." EX1004, [0045], [0048].

114. Similarly, Toshiki's three-dimensional modeling device also includes "modeling processing unit 402" that "performs model processing to form a model target object on the modeling stage 112 on the basis of the modeling data in the modeling job storage unit 401." EX1024, [0103]. In Toshiki, a "modeling job is composed of modeling data and the corresponding attribute information, and is stored in association with identification information of the modeling job. The attribute information of the modeling data includes… the estimated usage amount." EX1024, [0102]. "During this modeling process, the recommended time for cartridge replacement is corrected on the basis of the actual amount of modeling material used in order to display the recommended time on the monitor screen 80." EX1024, [0141]-[0142], [0133]. A POSITA would have understood that Toshiki's modeling processing unit 402 controls operation of the three-dimensional printer during the fabrication process according to the amount of support material to be used

(operational parameter) to fabricate an object with the three-dimensional printer by, e.g., monitoring the amount of support material used to update the amount of support material to be used (operational parameter) and notifying the operator to replace the cartridge during the fabrication process.

115. For the reasons discussed above in Section IX.C.1, a POSITA would been motivated to implement Loughran's system based on Toshiki's suggestion such that when the amount of support material to be used in the modeling process (operational parameter specifying a support structure requirement) is suitable for the printer to complete the print job, the SFF mechanism 502 controls operation of the SFF system 104 (printer) during fabrication of the object according to the amount of support material to be used in the modeling process (operational parameter) by, e.g., monitoring the amount of support material used (operational parameter) and notifying the operator to replace the cartridge during the fabrication process.

(b) Claim 2

2. The method of claim 1, wherein the tag includes at least one of a radio frequency identification (RFID) tag, an optically-identifiable tag, a magnetically-identifiable tag, and a mechanical feature of the supply.

116. The Loughran-Toshiki combination renders obvious claim 2 for the same or substantially the same reasons that I discussed above at element 1[a].

(a) Claim 3

3. The method of claim 1, wherein the tag sensor includes at least one of a radio frequency identification (RFID) reader, an optical scanner, a magnetic reader, and a contact point sensor.

117. The Loughran-Toshiki combination renders obvious claim 3 for the same or substantially the same reasons that I discussed above at element 1[a].

(a) Claim 4

4. The method of claim 1, wherein the data includes at least one of a material identification number, a build material type, a build material diameter, an extruder temperature requirement, a build material melting temperature, a build material color, a build material color lot number, a cost per unit of build material, a build material density, a build material tensile strength, a build material viscosity, a build material recycle code, and a build material expiration date.

118. The Loughran-Toshiki combination renders obvious claim 4 for the same or substantially the same reasons that I discussed above at element 1[a].

(b) Claim 5

5. The method of claim 1, wherein the supply includes at least one of a cartridge, a spool, a filament, a number of pellets, and a liquid.

119. Loughran's SFF system 104 can include "a stereo lithography SFF system" where "plastic objects are built a layer at a time by tracing a laser beam on the surface of a vat of liquid photopolymer." EX1004, [0015]. Loughran's SFF system 104 can also include "a wide-area thermal inkjet or a single jet inkjet SFF system" where "a jet for each of a plastic build material and a wax-like support material is used." EX1004, [0016]. "The materials are held in a melted liquid state

in reservoirs. The liquids are fed to individual jetting heads that squirt tiny droplets of the materials in the required pattern as they are moved to form a layer of the object." *Id.* Thus, Loughran discloses that the supply includes a liquid.

120. Loughran's SFF system 104 can also include "a fused deposition modeling SFF system" where "a plastic filament is unwound from a coil and supplies material to an extrusion nozzle." EX1004, [0017]. Thus, Loughran also discloses that the supply includes a filament.

(c) Claim 6

6. The method of claim 1, wherein the tag includes a radio frequency identification (RFID) tag, and the RFID tag is at least one of a passive RFID tag and an active RFID tag.

121. As discussed above in element 1[a], Loughran discloses a RFID tag. EX1004, [0021], [0033], [0047]. Loughran's RFID tag is either passive or active because RFID tags are of one of two types: passive or active. EX1007, 1.

(a) Claim 10

10. The method of claim 1, wherein the operational parameter is based upon a build material identification number contained in the data.

122. The Loughran-Toshiki combination renders obvious claim 10 for the same or substantially the same reasons that I discussed above at element 1[b].

(a) Claim 11

11. The method of claim 1, wherein the operational parameter further includes at least one of an extruder temperature and a feed rate.

123. As discussed above in element 1[b], Loughran discloses that "the

information retrieved by the second SFF system 104 regarding the material 112 may include… parameters of the material 112, including, but not limited to, melting temperature, storage temperature, minimum feature size, horizontal and vertical shrinkage rates, material lifetime, inter-layer delay time, and amount of ultraviolet (UV) light required per layer, among other parameters." EX1004, [0024]. "These parameters may include the operating temperature that the second SFF system 104 needs to achieve to melt the material, the temperature that the second SFF system 104 needs to maintain to store the material, the length of time to wait after one layer of the material has been fabricated before processing the next layer, and so on." EX1004, [0025]. A POSITA would have understood that the "melting temperature" needed to "melt the material" is an operational parameter specifying an extruder temperature.

124. Toshiki also discloses that the "thickness of the modeling material layer for one slice is determined by the scanning speed of the modeling material nozzles 312 and 322 in the x direction and the amount of modeling material discharged per unit time." EX1024, [0085]. A POSITA would have understood that scanning speed, as taught by Toshiki, discloses or at least renders obvious a feed rate. A POSITA's understanding is corroborated by Evans, which discloses that "printer control applications have a way for moving each of the axes on a 3D printer, including settings for movement speed (feedrate)." EX1023, 51. Evans further discloses that

"the speed at which the printer builds our objects" is "also called its print speed or feedrate." EX1023, 63.

(a) Claim 12

12[p]. A system, comprising:

125. The Loughran-Toshiki combination renders obvious element 12[p] for the same or substantially the same reasons that I discussed above at element 1[p] and 1[a].

12[a]. a three-dimensional printer;

126. The Loughran-Toshiki combination renders obvious element 12[a] for the same or substantially the same reasons that I discussed above at element 1[a].

12[b]. a coupling adapted to receive a supply of a build material;

127. As discussed above in element 1[a], Loughran's FIG. 1 shows "a material container 110 containing a material 112 from which physical objects can be fabricated at the second SFF system 104 in accordance with SFF fabrication jobs generated at the [client] system 102 is introduced into the second SFF system 104, as indicated by the arrow 116." EX1004, [0020].

FIG 1

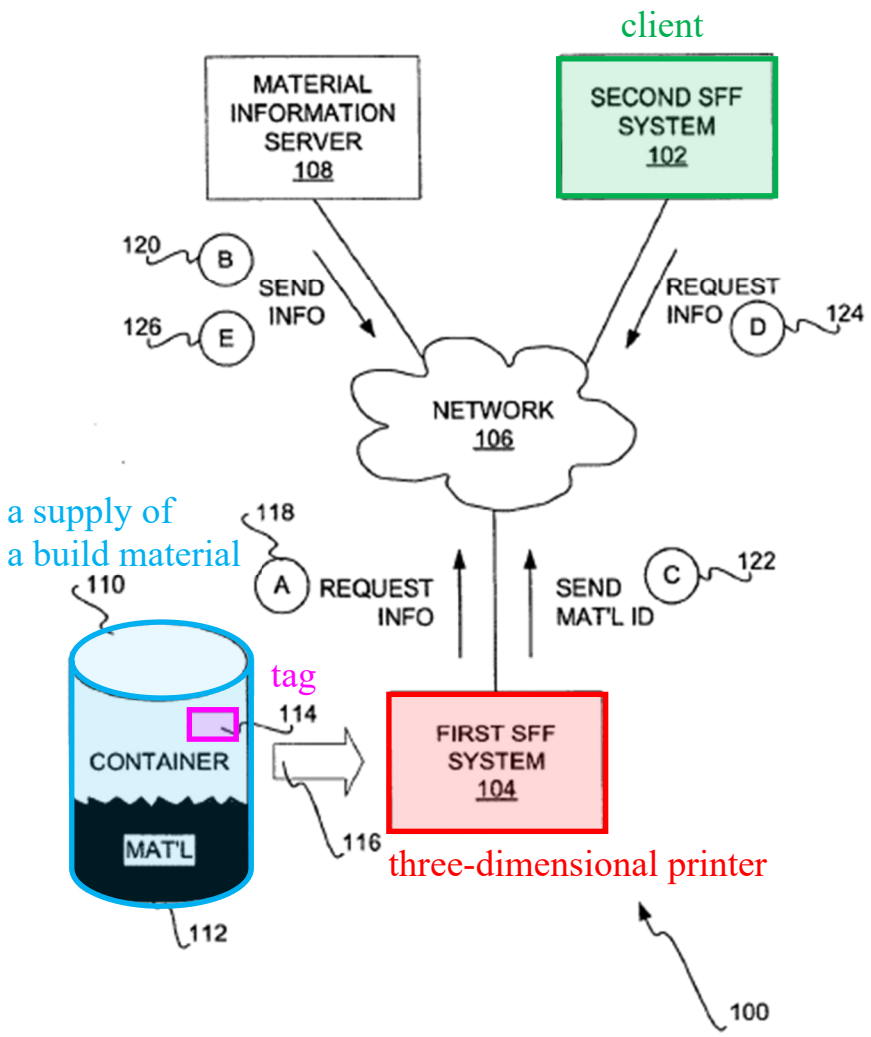

EX1004, FIG. 1. The material container 110 containing material 112 is a supply of build material and is coupled to the SFF system 104 (three-dimensional printer) through introduction of the material container 110 into the SFF system 104. A POSITA would have understood that Loughran's SFF system 104 includes a coupling that receives the material container 110.

128. Toshiki confirms that a three-dimensional modeling device such as

Loughran's SFF system 104 includes a coupling that receives a material container such as a material cartridge. For example, Toshiki discloses that a three-dimensional modeling device 10 includes "a cartridge storage part 130 that stores modeling material cartridges and the like." EX1024, [0036].

FIG. 2

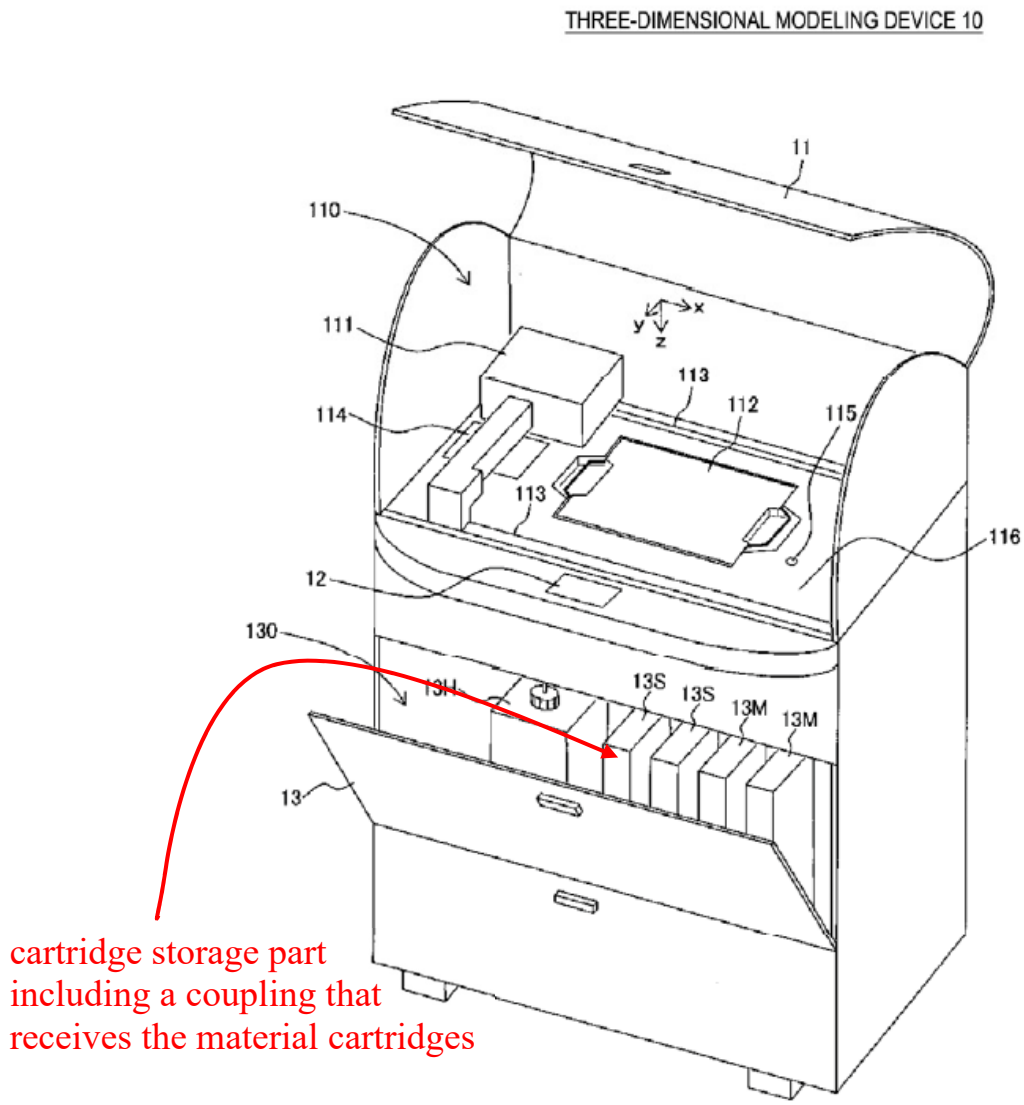

EX1024, FIG. 2. "The cartridge storage part 130 stores two model material

cartridges 13M" and "two support material cartridges 13S." EX1024, [0045], [0049]. "The model material cartridge 13M is a removable modeling material storage tank that contains the model material M prior to use. The support material cartridge 13S is a removable modeling material storage tank that contains the support material S prior to use. In other words, the model 15 material cartridge 13M and the support material cartridge 13S contain the modeling material prior to being discharged from the modeling material nozzles 312 and 322 of the head unit 111." EX1024, [0047]. A POSITA would have understood that the cartridge storage part 130 includes a coupling that receives the material cartridges so that the cartridges can be stored in the cartridge storage part and materials from the cartridges can be provided to the nozzles.

12[c]. a tag sensor communicatively associated with the three-dimensional printer, the tag sensor configured to read data from a data tag associated with the supply of the build material, the data including at least one property of the build material;

129. The Loughran-Toshiki combination renders obvious element 12[c] for the same or substantially the same reasons that I discussed above at element 1[a].

12[d]. a processor configured to determine an operational parameter of a fabrication process using the three-dimensional printer based upon the data and to perform a diagnostic test to determine whether the operational parameter is suitable for the three-dimensional printer, the operational parameter including at least one of a build platform temperature, a build

volume temperature, an infill requirement, a rafting requirement, a support structure requirement, and a cooling requirement; and

130. Toshiki discloses a "modeling estimation unit 204" that calculates "an estimated amount of modeling material to be used in the modeling process 223, on the basis of the modeling data 221," and describes an implementation where "the modeling estimation unit 204 may be provided in the three-dimensional modeling device 10, and the three-dimensional modeling device 10 may calculate… the estimated usage amount on the basis of the modeling data 221 received from the modeling requester terminal 20." EX1024, [0095]; *see also supra*, element 1[b]. As described above in element 1[c], Toshiki's "tank replacement determining unit 406" then compares "the current remaining amount of the model material M and the support material S with the cumulative amount of the modeling material to be used in model processing" as determined by the modeling estimation unit 204. EX1024, [0110], [0139], [0015], [0017]. A POSITA would have understood that the modeling estimation unit 204 and the tank replacement determining unit 406 are functional units executed by a processor. EX1001, 4:1-21 ("All such computing devices and environments are intended to fall within the meaning of the term 'controller' or 'processor'.").

12[e]. a controller for the three-dimensional printer, the controller configured to, when the operational parameter is suitable for the three-dimensional printer according to the diagnostic test, control operation of the three-dimensional

printer during the fabrication process according to the operational parameter to fabricate an object with the three-dimensional printer.

131. The Loughran-Toshiki combination renders obvious element 12[e] for the same or substantially the same reasons that I discussed above at elements 1[a] and 1[d]. A POSITA would have understood that each of Loughran's SFF mechanism 502 and Toshiki's modeling processing unit 402 are functional units executed by a controller for the three-dimensional printer. EX1001, 4:1-21 ("All such computing devices and environments are intended to fall within the meaning of the term 'controller' or 'processor'.").

(a) Claim 13

13. The system of claim 12, further comprising a container holding the supply of the build material, wherein the container is configured to connect to the coupling, and wherein the container includes the data tag.

132. The Loughran-Toshiki combination renders obvious claim 13 for the same or substantially the same reasons that I discussed above at elements 1[a] and 12[b].

(b) Claim 14

14. The system of claim 13, wherein the container includes at least one of a cartridge and a spool.

133. The Loughran-Toshiki combination renders obvious claim 14 for the same or substantially the same reasons that I discussed above at element 1[a] and 12[b].

(c) Claim 15

15. The system of claim 12, wherein the build material includes at least one of a filament, a number of pellets, and a liquid.

134. The Loughran-Toshiki combination renders obvious claim 15 for the same or substantially the same reasons that I discussed above at claim 5.

(a) Claim 17

17. The system of claim 12, wherein the processor is included on one or more of the controller and the three-dimensional printer.

135. The Loughran-Toshiki combination renders obvious claim 17 for the same or substantially the same reasons that I discussed above at elements 1[a], 1[b], 1[c], 12[d]. Further, Toshiki discloses that "the modeling estimation unit 204 may be provided in the three-dimensional modeling device 10, and the three-dimensional modeling device 10 may calculate… the estimated usage amount on the basis of the modeling data 221 received from the modeling requester terminal 20." EX1024, [0095].

(a) Claim 18

18. The system of claim 12, wherein the tag sensor includes at least one of a radio frequency identification (RFID) reader, an optical scanner, a magnetic reader, and a contact point sensor.

136. The Loughran-Toshiki combination renders obvious claim 18 for the same or substantially the same reasons that I discussed above at element 1[a].

(b) Claim 19

19[p]. A method, comprising:

137. The Loughran-Toshiki combination renders obvious element 19[p] for the same or substantially the same reasons that I discussed above at element 1[p].

19[a]. reading first data from a tag included on a supply of a build material using a tag sensor associated with a three-dimensional printer, the first data related to the build material;

138. The Loughran-Toshiki combination renders obvious element 19[a] for the same or substantially the same reasons that I discussed above at element 1[a].

19[b]. retrieving second data from a data store, the second data including additional data related to the build material;

139. The Loughran-Toshiki combination renders obvious element 19[b] for the same or substantially the same reasons that I discussed above at element 1[b].

19[c]. combining the first data and the second data;

140. The Loughran-Toshiki combination renders obvious element 19[c] for the same or substantially the same reasons that I discussed above at elements 1[a] and 1[b].

19[d]. determining an operational parameter to configure the three-dimensional printer for a fabrication process using the build material based upon the combination of the first data and the second data;

141. The Loughran-Toshiki combination renders obvious element 19[d] for the same or substantially the same reasons that I discussed above at element 1[b].

19[e]. performing a diagnostic test to determine whether the operational parameter is suitable for the three-dimensional printer; and

142. The Loughran-Toshiki combination renders obvious element 19[e] for the same or substantially the same reasons that I discussed above at element 1[c].

19[f]. when the operational parameter is suitable for the three-dimensional printer according to the diagnostic test, controlling operation of the three-dimensional printer during the fabrication process according to the operational parameter to fabricate an object with the three-dimensional printer.

143. The Loughran-Toshiki combination renders obvious element 19[f] for the same or substantially the same reasons that I discussed above at element 1[d].

X. ADDITIONAL REMARKS

144. I currently hold the opinions expressed in this declaration. But my analysis may continue, and I may acquire additional information and/or attain supplemental insights that may result in added observations.

145. I hereby declare that all statements made are of my own knowledge are true and that all statements made on information and belief are believed to be true. I further declare that these statements were made with the knowledge that willful false statements and the like so made are punishable by fine or imprisonment, or both, under Section 1001 of the Title 18 of the United States Code and that such willful false statements may jeopardize the validity of this proceeding.

Dated: Feb 6, 2025 By: _____

Michael A. Hickner, PhD
East Lansing, MI

Appendix A

MICHAEL A. HICKNER
Department of Chemical Engineering and Materials Science
Michigan State University
East Lansing, MI 48824
Tel: (814) 933-2204
mhickner@msu.edu
https://www.egr.msu.edu/people/profile/mhickner

Professional Preparation

Virginia Tech	Chemical Engineering Dissertation Advisor: J. E. McGrath, Chemistry (deceased)	Ph.D. 2003
Virginia Tech	Chemical Engineering	M.Eng. 2002
Michigan Technological University	Chemical Engineering	B.S. 1999

Appointments

2023-present	Craig A. Rogerson Endowed Professor Department of Chemical Engineering and Materials Science Michigan State University, East Lansing, MI
2023-present	Adjunct Professor, Department of Materials Science and Engineering Pennsylvania State University, University Park, PA
August 2018-present	Associate Editor, ACS Applied Energy Materials, American Chemical Society
July 2018-Dec 2022	Professor, Materials Science and Engineering Professor by courtesy, Department of Chemistry and Department of Chemical Engineering The Pennsylvania State University, University Park PA
Sept. 2017-Dec 2022	Co-Director, Center for Innovative Materials Processing through Direct Digital Deposition (CIMP-3D) The Pennsylvania State University, University Park PA
Nov. 2016-Dec 2022	Associate Director, Materials Research Institute The Pennsylvania State University, University Park PA
Oct. 2016-July 2018	Associate Professor by courtesy, Department of Chemistry The Pennsylvania State University, University Park PA
Feb. 2014-July 2018	Associate Professor by courtesy, Department of Chemical Engineering The Pennsylvania State University, University Park PA
July 2013-July 2018	Associate Professor, Department of Materials Science and Engineering The Pennsylvania State University, University Park PA Corning Faculty Fellow (2016-2019)
July 2007-June 2013	Assistant Professor, Department of Materials Science and Engineering The Pennsylvania State University, University Park, PA Virginia S. and Philip L. Walker, Jr. Faculty Fellow (2010-2013)
2005-June 2007	Senior Member of the Technical Staff

	Sandia National Laboratories, Albuquerque, NM
2003-2005	Postdoctoral Appointee Sandia National Laboratories, Albuquerque, NM
2002, 2000	Graduate Research Assistant Los Alamos National Laboratory, Los Alamos, NM

Research Interests and Expertise

My research interests focus on the coupling of polymer composition and nanophase structure, water diffusion in membranes, and ion transport. My research group strives to understand the self-assembly of polymers with attached ions, the binding of water to the polymer matrix through hydration and nanoscale confinement, and how this water-polymer framework sets the stage for the transport of ions and small molecules through the material. To achieve basic understanding of the properties of ionic polymer systems, we undertake the synthesis of new polymers and perform measurements of their solution and solid-state structure. We elucidate water-polymer interactions using spectroscopic methods and study the effects of chemical composition, phase-separated domain structure, grain boundaries, and surface interactions on polymer membrane properties. Through this fundamental work, we strive to develop new materials for membrane and electrochemical processes including applications in batteries, fuel cells, and water purification. A recent facet of my work has been on measuring and controlling the surface properties of new polymers to combat fouling in marine environments and microbial fuel cells. We have also broken new ground in additive manufacturing of unique materials, assemblies, composites, and polymer-derived ceramics. My group also draws on its core expertise in polymer synthesis and polymer function to devise new polymers for basic studies of polymer thin films and control of interfaces and transport processes in organic electronics.

Professional Service

- Presiding Session Organizer, "Cooperative Research Award: Symposium in Honor of Enrique Gomez, Manish Kumar, Abhishek Roy, Mou Paul, Jeffrey Wilbur, and Tyler Culp" American Chemical Society Spring National Meeting, March 26-30, 2023.
- Co-organizer (with Brian Benicewicz, U. South Carolina) American Chemical Society Polymer Chemistry Division Workshop, "Polymers for Fuel Cells, Energy Storage, and Conversion" Napa CA, February 15-18, 2022.
- Co-organizer (with Rob Hickey, Penn State) Penn State EMS 125th Polymer Symposium, University Park, PA April 10, 2021.
- Co-organizer (with Peter Pintauro and Michael Guiver) North American Membrane Society 2019 National Meeting, Session on Fuel Cells and Batteries, Pittsbuergh, PA, May 11-15, 2019.
- Co-organizer (with Brian Benicewicz, U. South Carolina) American Chemical Society Polymer Chemistry Division Workshop, "Polymers for Fuel Cells, Energy Storage, and Conversion" Asilomar CA, February 15-18, 2019.
- Co-organizer (with Stephen Paddison UTK, Mark Tuckerman NYU, and Chulsung Bae RPI) 19th International Conference on Solid State Protonic Conductors (SSPC-19), Stowe, VT, Sept. 16-21, 2018.
- Co-organizer (with Rigoberto Andvincula CWRU) for session on Membranes and Blends, 4th US-Mexico Symposium on Advances in Polymer Science – MACROMEX 2017, Cabo San Lucas, Mexico, December 9, 2017.
- Co-organizer (with Corky Mittlesteadt) for session on Ionic Membranes, International Conference on Membranes – ICOM, San Francisco, California July 30, 2017.
- Co-organizer (with Andrew Herring, Patrik Jannasch, and Peter Pintauro) for session on Anion and Cation Exchange Membranes, 21st Conference on Solid State Ionics, June 19, 2017.
- MRS Bulletin Volume Editor – 2017-2018.
- Electrochemical Society Journals Editorial Advisory Committee, 2016-present.
- Guest Editor (with Geoff Geise, U Virgnia, and Abhishek Roy, Dow) *Polymer* Special Issue on Using the Tools of Polymer Science to Impact Water Treatment Membranes.
- International Advisory Board – International Symposium on Polymer Electrolytes, 2013-present.
- International Advisory Board – Solid State Ionics, 2016-present.
- Membrane Session Chairperson – Department of Energy Workshop on Alkaline Membranes, Phoenix, AZ, April 1, 2016.
- Co-organizer (with Benny Freeman, UT Austin) for session on Energy - Membranes, Batteries, and Fuel Cells at Pacific Polymer Conference, Kauai, Hawaii, December 2015.
- Co-organizer (with Kenji Miyatake and Bryan Pivovar) – Pacifichem 2015 session on "Current Status and Future Prospect of Polymer Electrolyte Fuel Cells", Honolulu, Hawaii, December 2015.
- Co-organizer (with Jeff McCutcheon, UConn and Lauren Greenlee, NIST) for American Chemical Society Polymer Chemistry Division Workshop Advances in Materials and Processes for Polymeric Membrane Mediated Water Purification, Asilomar CA, February 15-18, 2015.

- Co-organizer (with Benny Freeman, UT Austin) for session on Symposium on Advanced Polymer Materials: Membranes at 3rd US-Mexico Symposium on Advances in Polymer Science – MACROMEX 2014, Nuevo Vallarta, Mexico, December 6, 2014.
- Lead investigator on American Chemical Society Technical Division Innovative Project Grant on "Strengthening Division Activities by Outreach to Meeting Attendees and Engaging Students". A $5,000 society grant for innovative ideas in division activities.
- 2012-2015 – Elected by the division members to the POLY Executive Council as "Alternate Councilor" for the Polymer Division of the American Chemical Society.
- 2013-2016 – Selected by the Editor-in-Chief Tim Lodge to serve on Macromolecules and ACS Macro Letters Editorial Advisory Boards.
- 2011-2013 - Elected to the Center for Nanophase Materials Sciences User Executive Committee by vote of the user group at Oak Ridge National Laboratory.
- Co-organizer 6th international fuel cell workshop (IFCW) August 2nd and 3rd, 2012 Kofu Japan.
- Co-Organizer (with Michael Eikerling and Stephen Paddison) Pacifichem 2010 session on "The Chemistry, Structure, and Properties of Fuel Cell Membranes" Honolulu, Hawaii, December 2010.
- Session co-chair for numerous technical sessions at Electrochemical Society, American Chemical Society, and other technical meetings.
- Manuscript reviewer for Journal of Physical Chemistry, Angewande Chemie, Journal of the American Chemical Society, Macromolecules, Industrial & Engineering Chemistry Research, Journal of Polymer Science and Engineering, Electrochimica Acta, Science, Fuel Cells, Applied Physics Letters, Nature Publishing Group, Journal of Membrane Science, Electrochemical and Solid- State Letters, Journal of the Electrochemical Society, International Journal of Hydrogen Energy, Journal of Power Sources, Polymer, Polymer International, ASME Journal of Fuel Cell Science and Technology.
- Proposal reviewer for NRC Canada, DOE Basic Energy Sciences, DOE Energy Efficiency and Renewable Energy, American Chemical Society Petroleum Research Fund, NSF Engineering Directorate and Division of Materials Research, American Association for the Advancement of Science, Danish Innovation Fund, National Center for Science and Technology – Kazakhstan, CRDF Global – a US non-profit.

University and Department Service

- MSU CHEMS/ECE Semiconductor Search Committee 2023-2024.
- MSU College of Engineering College Review Committee 2023-2024.
- MSU CHEMS Faculty Advisory Committee 2023-2024.
- MSU College of Engineering, Engineering Research Counsel 2023-2024.
- PSU EMS Faculty Performance Evaluation Committee 2019-2022.
- PSU MATSE Department Diversity Committee 2020-2022.
- PSU MATSE Department Graduate Recruiting Committee 2019-present.
- PSU Department of Chemical Engineering/PSIEE faculty search committee – 2019.
- PSU MATSE Faculty Search Committee – 2019.
- PSU MATSE Department Mentoring Committee 2017-2022.
- PSU MATSE Department Facilities Committee 2017-present.
- PSU MATSE Department Awards Committee 2016-present.
- PSU EMS faculty senator, sabbatical replacement appointment – 2016-2017.

- PSU Department of Chemistry faculty search committee – 2016-2018.
- PSU Undergraduate class adviser for MATSE – 2013-2018.
- PSU Materials Research Institute and MATSE Department strategic planning committees – 2015.
- PSU MATSE Department Steidle Building renovation committee – 2013-2015.
- PSU MATSE Department safety committee faculty chair – 2009-2015.
- PSU MATSE Department faculty search committee – Fall 2012 and Fall 2015.
- PSU Earth and Mineral Sciences College Faculty Advisory Committee member – 2011-2013.
- PSU MATSE Department undergraduate curriculum committee member - Core I, recommendations submitted to department chair – 2011.
- PSU Chemical Engineering Department faculty search committee – Fall 2008.
- PSU Nuclear and Mechanical Engineering Department faculty search committee – Spring 2008.
- PSU MATSE Department recruiting committee – 2007-2010.
- PSU MATSE Department Energy strategic planning subgroup, report submitted to department chair – 2008.

Awards

2019	PMSE Cooperative Research Award from the Polymeric Materials Science and Engineering Division of the American Chemical Society – with NIST and DOW team members.
2017	CRDF Global Visiting Scholar Sabbatical Fellowship at KAUST.
2017	Faculty mentoring award, Penn State College of Earth and Mineral Sciences.
2016-2019	Corning Faculty Fellow, Department of Materials Science and Engineering, The Pennsylvania State University.
2013	Rustum and Della Roy Innovation in Materials Research Award, The Pennsylvania State University.
2010-2013	Virginia S. and Philip L. Walker, Jr. Faculty Fellow, College of Earth and Mineral Sciences, The Pennsylvania State University.
2009	Presidential Early Career Award for Scientists and Engineers (PECASE) from DoD/ONR
2009	3M Non-tenured Faculty Grant.
2008	Students' Choice Faculty of the Year Award in Materials Science and Engineering Department, The Pennsylvania State University.
2008	U.S. Office of Naval Research Young Investigator Award.
2008	U.S. Army Research Office Young Investigator Award.
2008	Ralph E. Powe Junior Faculty Enhancement Award from Oak Ridge Associated Universities.
2004	R&D 100 Award for Proton Exchange Membrane Development with VT/Battelle Group.
Fall 2001	Richard A. Glenn Award for Best Paper in the Division of Fuel Chemistry at the National ACS Meeting, Chicago, IL.
2001	Omnova Solutions Graduate Student Signature Award.
1999–2002	Cunningham Doctoral Fellowship, Virginia Tech.
1999	Bredekamp Award for Outstanding Unit Operations Team, Michigan Tech.
1999	Department Scholar – Chemical Engineering, Michigan Tech.
1998	AIChE Donald A. Othmer and Mildred Topp Othmer National Scholarship.

Professional Affiliations

- American Chemical Society
- Materials Research Society
- The Electrochemical Society

Peer-Reviewed Journal Publications

More than 29,000 citations as of February 2024 (Google Scholar)
Hirsch index = 84
https://scholar.google.com/citations?user=RJHRgYQAAAAJ&hl=en
Web of Science – more than 21,900 citations, Hirsch index = 75, Average citations per item = 69.35

223. Cassady, H. J., M. F. Rochow, M. A. Hickner, "Describing the permeability of permanganate co-ions in a CEM with varying supporting electrolyte concentrations," *J. Membrane Science* **2024**, 694, 122381.

222. Shi, L., X. Zhou, R. F. Taylor, C. Xie, B. Bian, D. M. Hall, R. Rossi, M. A. Hickner, C. A. Gorski, B. E. Logan, "Thin-Film Composite Membranes for Hydrogen Evolution with a Saline Catholyte Water Feed," *Environmental Science & Technology* **2024**.

221. Peeke, L. M., W. Liu, M. Periyasamy, R. R. Campbell, E. Sassano, W. J. Hajduczek, M. A. Hickner, "Material extrusion additive manufacturing of dual material composite thermoset silicone components," *Polymer Engineering & Science* **2024**, 64 (1), 218-230.

220. Capparelli, C., C. Rafalko, H. J. Cassady, M. E. Matta, B. J. Stovall, M. A. Hickner, "Nonporous Cation Exchange Membranes with pH-Responsive Properties as Chemical Valves," *ACS Applied Polymer Materials* **2023**.

219. Afolayan, E. O., I. Dursun, A. Pizano, C. Lang, D. Lungwitz, M. Kondakova, M. Boroson, A. Kahn, M. Hickner, N. C. Giebink, "Improved Light Extraction in Organic Light-Emitting Diodes via Semiconductor Dilution, "*Advanced Optical Materials* **2023**, 2302588

218. Guo, Z., A. Plant, J. Del Mundo, J. H. Litofsky, B. Liu, R. J. L. Hallman, E. W. Gomez, M. A. Hickner, Y. Lee, E. D. Gomez, "Fully conjugated block copolymers enhance thermal stability of polymer blend solar cells," *Polymer* **2023**, 288, 126465.

217. Rafalko, C., B. J. Stovall, T. Zimudzi, M. A. Hickner, "Tunable Stereolithography Photopolymerization Resin for Molding Water-Soluble Cavities," *ACS Applied Polymer Materials* **2023**, 5 (12), 10097-10104.

216. Cross, N. R., H. Vazquez-Sanchez, M. J. Rau, S. N. Lvov, M. A. Hickner, C. A. Gorski, S. S. Nagaraja, S. M. Sarathy, B. E. Logan, Derek M Hall "Hydrocarbon-based membranes cost-effectively manage species transport and increase performance in thermally regenerative batteries," *Electrochimica Acta* **2023**, 467, 143090.

215. Liu, W. L. M. Peeke, M. Periyasamy, R. R. Campbell, M. A. Hickner, "Additive manufacturing of silicone composite structures with continuous carbon fiber reinforcement," *Polymer Engineering & Science* **2023**, 63(6), 1716-1724.

214. Liu, W., R. R. Campbell, M. Periyasamy, M. A. Hickner, "Additive manufacturing of silicone-thermoplastic elastomeric composite architectures," *Journal of Composite Materials* **2022**, 5, 29, ASAP.

213. Yeh, S.-L., N. Narasimhalu, L. G. Vom Steeg, J. Muthami, S. LeConey, Z. He, M. Pitcher, H. Cassady, V. J. Morley, S. H. Cho, C. Bator, R. Koshani, R. J. Woods, M. Hickner, A. F. Read, A.

Sheikhi "Ion exchange biomaterials to capture daptomycin and prevent resistance evolution in off-target bacterial populations,"*ACS Applied Materials & Interfaces* **2022**,14 (38), 42864-42875.

212. Afolayan, E. O., I. Dursun, C. Lang, E. Pakhomenko, M. Kondakova, M. Boroson, M. Hickner, R. J. Holmes, N. C. Giebink, "Reducing Spontaneous Orientational Polarization via Semiconductor Dilution Improves OLED Efficiency and Lifetime," *Physical Review Applied* **2022**,17 (5), L051002.

211. T. Zelovich, L. Vogt-Maranto, C. Simari, I. Nicotera, M. A. Hickner, S. J. Paddison, C. Bae, D. R. Dekel, M. E. Tuckerman, "Non-Monotonic Temperature Dependence of Hydroxide Ion Diffusion in Anion Exchange Membranes," *Chemistry of Materials* **2022**, 34, 5, 2133–2145.

210. Zimudzi, T. J., S. E. Sheffield, K. E. Feldman, P. A. Beaucage, D. M. DeLongchamp, D. I. Kushner, C. M. Stafford, M. A Hickner, "Orientation of Thin Polyamide Layer-by-Layer Films on Non-Porous Substrates," *Macromolecules* **2021**, 54, 24, 11296–11303.

209. Xu, F., K. Qiu, B. Lin, Y. Ren, J. Li, J. Ding, M. A. Hickner, "Enhanced performance of poly (olefin)-based anion exchange membranes cross-linked by triallylmethyl ammonium iodine and divinylbenzene," *Journal of Membrane Science* **2021**, 637, 119629.

208. Salvatore, D. A., C. M. Gabardo, A. Reyes, C. P. O'Brien, S. Holdcroft, P. Pintauro, B. Bahar, M. Hickner, C. Bae, D. Sinton, E. H. Sargent, C. P. Berlinguette, "Designing anion exchange membranes for CO2 electrolysers," *Nature Energy* **2021**, 6 (4), 339-348.

207. Rossi, R., D. M. Hall, L. Shi, N. R. Cross, C. A. Gorski, M. A. Hickner, B. E. Logan, "Using a vapor-fed anode and saline catholyte to manage ion transport in a proton exchange membrane electrolyzer," *Energy & Environmental Science* **2021**, 14 (11), 6041-6049.

206. López, A. G., R. G. Najjar, M. A. M. Friedrichs, M. A. Hickner, D. H. Wardrop, "Estuaries as Filters for Riverine Microplastics: Simulations in a Large, Coastal-Plain Estuary," *Frontiers in Marine Science* **2021**, 26 (715924).

205. Yan, Z., J. L. Hitt, Z. Zeng, M. A. Hickner, T. E. Mallouk, "Improving the efficiency of CO 2 electrolysis by using a bipolar membrane with a weak-acid cation exchange layer," *Nature Chemistry* **2021**, 1-8.

204. Kuray, P., W. Mei, S. E. Sheffield, J. Sengeh, C. R. F. Pulido, C. Capparelli, R. J. Hickey, M. A Hickner, "Ion Transport in Solvated Sodium-Ion Conducting Gel Polymer Electrolytes," *Frontiers in Energy Research* **2020**, 8, 250.

203. Luo, X., H. Liu, C. Bae, M. E. Tuckerman, M. A. Hickner, S. J. Paddison, "Mesoscale Simulations of Quaternary Ammonium-Tethered Triblock Copolymers: Effects of the Degree of Functionalization and Styrene Content," *The Journal of Physical Chemistry C* **2020**, 124 (30), 16315-16323.

202. Shi, L., R. Rossi, M. Son, D. M. Hall, M. A. Hickner, C. A. Gorski, B. E. Logan, "Using reverse osmosis membranes to control ion transport during water electrolysis," *Energy & Environmental Science* **2020**, 13 (9), 3138-3148,

201. Eneh, C. I., M. J. Bolen, P. C. Suarez-Martinez, A. L. Bachmann, T. J. Zimudzi, M. A. Hickner, P. Batys, M. Sammalkorpi, J. L Lutkenhaus, "Fourier transform infrared spectroscopy investigation

of water microenvironments in polyelectrolyte multilayers at varying temperatures," *Soft Matter* **2020**, 16 (9), 2291-2300.

200. Zhu, L., X. Yu, X. Peng, T. J. Zimudzi, N. Saikia, M. T. Kwasny, Shaofei Song, Douglas I Kushner, Zhisheng Fu, Gregory N Tew, William E Mustain, Michael A Yandrasits, Michael A Hickner Poly (olefin)-Based Anion Exchange Membranes Prepared Using Ziegler–Natta Polymerization," *Macromolecules* **2019**, 52, 11, 4030-4041.

199. Wang, X., R. Rossi, Z. Yan, W. Yang, M. A. Hickner, T. E. Mallouk, B. E. Logan, "Balancing water dissociation and current densities to enable sustainable hydrogen production with bipolar membranes in microbial electrolysis cells," *Environmental Science & Technology* **2019**, 53, 24, 14761-14768.

198. Kushner, D. I., A. Kusoglu, N. J. Podraza, M. A. Hickner, "Substrate-Dependent Molecular and Nanostructural Orientation of Nafion Thin Films," *Advanced Functional Materials* **2019**, 29, 37, 1902699.

197. Zelovich, T., L. Vogt-Maranto, M. A. Hickner, S. J. Paddison, C. Bae, D. R. Dekel, M. E. Tuckerman, "Hydroxide Ion Diffusion in Anion-Exchange Membranes at Low Hydration: Insights from Ab Initio Molecular Dynamics," *Chemistry of Materials* **2019**, 31 (15), 5778-5787.

196. Zhu, L., X. Peng, S. L. Shang, M. T. Kwasny, T. J. Zimudzi, X. Yu, N. Saikia, J. Pan, Z.-K. Liu, G. N. Tew, W. E. Mustain, M. Yandrasits, M.A. Hickner, "High Performance Anion Exchange Membrane Fuel Cells Enabled by Fluoropoly (olefin) Membranes," *Advanced Functional Materials* **2019**, 29 (26), 1902059.

195. Lang, C., J. A. LaNasa, N. Utomo, Y. Xu, M. J. Nelson, W. Song, M. A. Hickner, R. H. Colby, M. Kumar, R. J. Hickey, "Solvent-non-solvent rapid-injection for preparing nanostructured materials from micelles to hydrogels," *Nature Communications* **2019**, 10 (1), 1-10.

194. Kuray, P., T. Noda, A. Matsumoto, C. Iacob, T. Inoue, M. A. Hickner, J. Runt, "Ion Transport in Pendant and Backbone Polymerized Ionic Liquids," *Macromolecules* **2019**, 52 (17), 6438-6448.

193. Saha, P., C. Nam, M. A. Hickner, I. V. Zenyuk, "Electrokinetic Streaming-Current Methods to Probe the Electrode–Electrolyte Interface under Applied Potentials," *The Journal of Physical Chemistry C* **2019**, 123 (32), 19493-19505.

192. Capparelli, C., C. R. Fernandez Pulido, R. Lopez-Hallman, G. M. Geise, M. A. Hickner, "Anion Exchange Membranes with Dynamic Redox-Responsive Properties," *ACS Applied Materials & Interfaces* **2019**, 11 (32), 29187-29194.

191. Capparelli, C., C. R. Fernandez Pulido, R. A. Wiencek, M. A. Hickner, "Resistance and Permselectivity of 3D Printed Micropatterned Anion Exchange Membranes," *ACS Applied Materials & Interfaces* **2019**, 11 (29), 26298-26306.

190. Lang, C. D. Ye, W. Song, C. Yao, Y. Tu, C. Capparelli, J. A. LaNasa, M. A. Hickner, E. W. Gomez, E. D. Gomez, R. J. Hickey, M. Kumar, "Biomimetic separation of transport and matrix functions in lamellar block copolymer channel-based membranes," *ACS Nano* **2019**, 13 (7), 8292-8302

189. Zelovich, T., Z. Long, M. A. Hickner, S. J. Paddison, C. Bae, M. E. Tuckerman, "Ab initio Molecular Dynamics Study of Hydroxide Diffusion Mechanisms in Nano-Confined Structural mimics of Anion Exchange Membranes," *The Journal of Physical Chemistry C* **2019**, 123 (8), 4638-4653.

188. Jeon, J. Y., S. Park, J. Han, S. Maurya, A. D. Mohanty, D. Tian, N. Saikia, M. A. Hickner, C. Y. Ryu, M. E. Tuckerman, S. J. Paddison, Y. S. Kim, C. Bae, "Synthesis of Aromatic Anion Exchange Membranes by Friedel–Crafts Bromoalkylation and Cross-Linking of Polystyrene Block Copolymers," *Macromolecules* **2019**, 52 (5), 2139-2147.

187. Harrelson, T. F., V. Dantanarayana, X. Xie, C. Koshnick, D. Nai, R. Fair, S. A. Nuñez, A. K. Thomas, T. L Murrey, M. A. Hickner, J. K. Grey, J. E. Anthony, E. D. Gomez, A. Troisi, R. Faller, A. J. Moulé, "Direct probe of the nuclear modes limiting charge mobility in molecular semiconductors," *Materials Horizons* **2019**, 6 (1), 182-191.

186. Thieu, L. M., L. Zhu, A. G. Korovich, M. A. Hickner, L. A. Madsen, "Multiscale Tortuous Diffusion in Anion and Cation Exchange Membranes," *Macromolecules* **2018**, 52 (1), 24-35.

185. Buelke, C., A. Alshami, J. Casler, J. Lewis, M. Al-Sayaghi, M. A. Hickner, "Graphene oxide membranes for enhancing water purification in terrestrial and space-born applications: State of the art," *Desalination* **2018**, 448, 113-132.

184. Zimudzi, T. J., K. E. Feldman, J. F. Sturnfield, A. Roy, M. A. Hickner, C. M. Stafford, "Quantifying Carboxylic Acid Concentration in Model Polyamide Desalination Membranes via Fourier Transform Infrared Spectroscopy," *Macromolecules* **2018**, 51 (17), 6623-6629.

183. Kwasny, M. T., L. Zhu, M. A. Hickner, G. N. Tew, "Thermodynamics of counterion release is critical for anion exchange membrane conductivity," *Journal of the American Chemical Society* **2018**, 140 (25), 7961-7969.

182. Miao, Z., J. Seo, M. A. Hickner, "Solvent-Cast 3D Printing of Polysulfone and Polyaniline Composites," *Polymer* **2018** 152, 18-24.

181. Yan, Z., L. Zhu, Y. C. Li, R. Wycisk, P. N. Pintauro, M. A. Hickner, T. E. Mallouk, "The Balance of Electric Field and Interfacial Catalysis in Promoting Water Dissociation in Bipolar Membranes," *Energy and Environmental Science* **2018**, 11 (8), 2235-2245

180. McCrum, I. T., M. A. Hickner, M. J. Janik, "Quaternary Ammonium Cation Specific Adsorption on Platinum Electrodes: A Combined Experimental and Density Functional Theory Study," *J. Electrochem. Soc.* **2018**, 165(2), F114-F121.

179. Moazezi, N., M. Baghdadi, M. A. Hickner, M. A. Moosavian, "Modeling and Experimental Evaluation of Ni(II) and Pb(II) Sorption from Aqueous Solutions Using a Polyaniline/CoFeC6N6 Nanocomposite," *Journal of Chemical & Engineering Data* **2018**, 63(3), 741-750.

178. Lang, C., Y.-X. Shen, J. A. LaNasa, D. Ye, W. Song, T. J. Zimudzi, M. A. Hickner, E. D. Gomez, E. W. Gomez, M. Kumar, R. Hickey, "Creating Cross-Linked Lamellar Block Copolymer Supporting Layers for Biomimetic Membranes," *Faraday Discussions* **2018**, 209, 179-191.

177. Kushner, D., M. A. Hickner, "Substrate-dependent Physical Aging of Confined Nafion Thin Films," *ACS Macro Letters* **2018**, 7(2), 223-227.

176. Seo, J., A. K. Singh, Y. Zhang, J. Ma, C. E. Bakis, C. D. Rahn, M. A. Hickner, "Electrolyte-resistant epoxy for bonding batteries based on sandwich structures," *Journal of Applied Polymer Science* **2018**, 135 (15), 46059-1,9.

175. Dishari, S., C. Rumble, M. Maroncelli, J. Dura, M. A. Hickner, "Unraveling the Complex Hydration Behavior of Ionomers Under Thin Film Confinement," *J Phys. Chem. C* **2018**, 122(6), 3471-3481.

174. Liu, L., X. Chu, J. Liao, Y. Huang, Y. Li, Z. Ge, M. A. Hickner, N. Li, "Tuning the Properties of Poly (2, 6-dimethyl-1, 4-phenylene oxide) Anion Exchange Membranes and Their Performance in H2/O2 Fuel Cells," *Energ. & Environ. Sci.* **2018**, 11(2), 435-446.

173. Pena-Francesch, A., H. Jung, M. A. Hickner, M. Tyagi, B. D. Allen, M. C. Demirel, "Programmable Proton Conduction in Stretchable and Self-Healing Proteins," *Chem. Mater.* **2018** 30(3), 898-905.

172. Zhu, L., X. Yu, M. Hickner, "Exploring backbone-cation alkyl spacers for multi-cation side chain anion exchange membranes," *Journal of Power Sources* **2018**, 375, 433-441.

171. Intan, N. N., K. Klyukin, T. Zimudzi, M. Hickner, V. Alexandrov, "A Combined Theoretical-Experimental Study of Interactions between Vanadium Ions and Na on Membrane in All-Vanadium Redox Flow Batteries," *J. Power Sources* **2018**, 373, 150-160.

170. Kwasny, M.T., L. Zhu, M. A. Hickner, G. N. Tew, "Utilizing Thiol-ene Chemistry for Crosslinked Nickel-Cation-Based Anion Exchange Membranes," *J. Polym. Sci. A: Polym. Chem.* **2018**, 56(3), 328-339.

169. Gatley-Montross, C., J. Finlay, N. Aldred, H. Cassady, J. Destino, B. Orihuela-Diaz, M. Hickner, A. S. Clare, D.Rittschof, E. Holm, M. Detty, "Multivariate Analysis of Attachment of Biofouling Organisms in Response to Material Surface Characteristics," *Biointerphases* **2017**, 12(5), 051003-1,12.

168. Wang, L., L. Zhu, M. Hickner, B. Bai, "Molecular Engineering Mechanically Programmable Hydrogels with Orthogonal Functionalization," *Chemistry of Materials* **2017**, 29(23), 9981-9989.

167. Smedley, S. B., T. J. Zimudzi, Y. Chang, C. Bae, M. A. Hickner, "Spectroscopic Characterization of Sulfonate Charge Density in Ion-Containing Polymers" *Journal of Physical Chemistry* **2017**, 121 (51), 11504-11510.

166. Wang, X., Q. Zhang, C. Nam, M. Hickner, M. Mahoney, M. E. Meyerhoff, "Ionophore-based optode printed on cellulose paper for hydrophobic polymer/plasticizer-free anion analysis," *Angew. Chem.* **2017**, 56(39), 11826-11830.

165. Sepehr, F., H. Liu, X. Luo, C. Bae, M. E. Tuckerman, M. A. Hickner, S. J. Paddison, "Mesoscale Simulations of Anion Exchange Membranes Based on Quaternary Ammonium Tethered Triblock Copolymers," *Macromolecules* **2017**, 50(11), 4397-4405.

164. McCrum, I. T., M. A. Hickner, M. J. Janik, "First-Principles Calculation of Pt Surface Energies in an Electrochemical Environment: Thermodynamic Driving Forces for Surface Faceting and Nanoparticle Reconstruction," *Langmuir* **2017**, 33(28), 7043-7052.

163. Ferrell, W. H., D. I. Kushner, M.A. Hickner, "Investigation of polymer–solvent interactions in poly (styrene sulfonate) thin films," *Journal of Polymer Science Part B: Polymer Physics* **2017**, 55 (18), 1365-1372.

162. Pan, J., J. Han, L. Zhu, M.A. Hickner, "Cationic Side-chain Attachment to Poly(phenylene oxide) Backbones for Chemically Stable and Conductive Anion Exchange Membranes," *Chem. Mater.* **2017**, 29(12), 5321–5330.

161. Kushner, D.I., M.A. Hickner, "Water Sorption in E-beam Evaporated SiO2 on QCM Crystals and Its Influence on Polymer Thin Film Hydration Measurements," *Langmuir* **2017**, 33(21), 5261-5268.

160. Ivanov, I., Y.T. Ahn, T. Poirson, M. A. Hickner, B.E. Logan, "Comparison of Cathode Catalyst Binders for the Hydrogen Evolution Reaction in Microbial Electrolysis Cells," *Int. J. Hydrogen Energy* **2017**, 42(24), 15739-15744.

159. M. A. Hickner, "Strategies for Developing New Anion Exchange Membranes and Electrode Ionomers," *ECS Interface* **2017**, 26(1), 69-73.
- Invited Perspective

158. Zhu, L., D. Zang, Y. Wang, Y. Guo, B. Jiang, F. He, Z. Fu, Z. Fan, M.A. Hickner, Z.-K. Liu, L.-Q. Chen, "Insight into the Mechanism of Thermal Stability of α-Diimine Nickel Complex in Catalyzing Ethylene Polymerization," *Organometallics* **2017**, 36 (6), 1196–1203.

157. Rigdon, W. A., T. J. Omasta, C. Lewis, L. Zhu, M. A. Hickner, S. D. Poynton, J. R. Varco, J. N. Renner, Kathy E. Ayers, W. E. Mustain, "Carbonate dynamics and opportunities with low temperature, AEM-based electrochemical CO_2 separators," *Journal of Electrochemical Energy Conversion and Storage* **2017**, 14 (2), 020701-1,8.

156. Zhu, J., T. J. Zimudzi, Y. Wang, X. Yu, J. Pan, J. Han, D.I. Kushner, L. Zhuang, M.A. Hickner, "Mechanically Robust Anion Exchange Membranes via Long Hydrophilic Cross-Linkers" *Macromolecules* **2017**, 50(6), 2329-2337.

155. Han, J., L. Zhu, J. Pan, T. J. Zimudzi, Y. Wang, Y. Peng, M. A. Hickner, L. Zhuang, "Elastic Long-Chain Multi-Cation Crosslinked Anion Exchange Membranes," *Macromolecules* **2017**, 50 (8), 3323–3332.

154. Rahimi, M., L. Zhu, K.L. Kowalski, X. Zhu, C.A. Gorski, M.A. Hickner, B.E. Logan, "Improved electrical power production of thermally regenerative batteries using a poly (phenylene oxide) based anion exchange membrane," *J. Power Sources* **2017**, 342, 956-963.

153. Roy, A., M.A. Hickner, H.S. Lee, T. Glass, M. Paul, A. Badami, J.S. Riffle, J.E. McGrath, "States of water in proton exchange membranes: Part A-Influence of chemical structure and composition," *Polymer* **2017**, 111, 297-306.

152. Rostamikia, G., R.J. Patel, I. Merino-Jimenez, M. Hickner, M.J. Janik, "Electrocatalyst Design for Direct Borohydride Oxidation Guided by First Principles," *J. Phys. Chem. C* **2017**, 121 (5), 2872-2881.

151. Yan, J., L. Zhu, B. L. Chaloux, M. A. Hickner, "Anion exchange membranes by bromination of tetramethylbiphenol-based poly (sulfone)s," *Polymer Chemistry* **2017**, 8, 2442-2449.

150. Zhang, Y., J. Ma, A. K. Singh, L. Cao, J. Seo, C.D. Rahn, C.E. Bakis, M.A. Hickner, "Multifunctional structural lithium-ion battery for electric vehicles," *J. Intelligent Material Systems and Structures* **2017**, 28(12), 1603-1613.

149. Hou, Y., Y. Zhou, L. Yang, Q. Li, Y. Zhang, L. Zhu, M. A Hickner, Q.M. Zhang, Q. Wang, "Flexible Ionic Diodes for Low-Frequency Mechanical Energy Harvesting," *Advanced Energy Materials* **2017**, 7(5), 1601983.

148. Hickner, M. A., G. M. Geise, A. Roy, "Using the tools of polymer science to impact water treatment membranes," *Polymer* **2016**, 103, 26 415-416.

147. Kushner, D. I., L. Zhu, A. Kusoglu, M. A. Hickner, "Side Chain Influence on the Mechanical Properties and Water Uptake of Confined Comb-shaped Cationic Polymer Thin Films," *Macromol. Chem. Phys.* **2016**, 217 (21), 2442-2451.

146. Hu, J., K. Peng, J. Guo, D. Shan, G. B. Kim, Q. Li, E. Gerhard, L. Zhu, W. Tu, W. Lv, M. A. Hickner, J. Wang, "Click Cross-Linking-Improved Waterborne Polymers for Environment-Friendly Coatings and Adhesives, "*ACS Applied Materials & Interfaces* **2016**, 8 (27), 17499-17510.

145. Wang, L., M. A. Hickner, "Highly Ordered Ion-Conducting Block Copolymers by Hydrophobic Block Modification," *J. Mater. Chem. A* **2016**, 4, 15437-15449.

144. Seo, J., D. Kushner, M. A. Hickner, "3D Printing of Micro-patterned Anion Exchange Membranes," *ACS Appl. Mater. Int.* **2016**, 8(26), 16656–16663.

143. Nam, C., T. Zimudzi, G. Geise, M. A. Hickner, Michael, "Increased Hydrogel Swelling Induced by Absorption of Small Molecules" *ACS Appl. Mater. Int.* **2016**, 8(22), 14263-14270.

142. Wang, L., M. A. Hickner, "Highly Conductive Side Chain Block Copolymer Anion Exchange Membranes," *Soft Matter* **2016**, 12, 5359-5371.

141. Amel, A., N. Gavish, M. A. Hickner, D. R. Dekel, Y. Ein-Eli, "Bicarbonate and Chloride Anion Transport in Anion Exchange Membranes," *J. Membrane Science* **2016**, 514, 125-134.

140. Zhu, L., J. Pan, C. M. Christensen, B. Lin, M. A. Hickner, "Functionalization of Poly(2,6-dimethyl-1,4-phenylene oxide)s with Hindered Fluorene Side Chains for Anion Exchange Membranes," *Macromolecules* **2016**, 49(9), 3300-3309.

138. Cassady, H. J., E. C. Cimino, M. Kumar, M. A. Hickner, "Specific ion effects on the permselectivity of sulfonated poly(ether sulfone) cation exchange membranes," *J. Membrane Science* **2016**, 508, 146-152.

137. Nuñez, S. A., C. Capparelli, M. A. Hickner, "N-Alkyl Interstitial Spacers and Terminal Pendants Influence the Alkaline Stability of Tetraalkylammonium Cations for Anion Exchange Membrane Fuel Cells," *Chem. Mater.* **2016**, 28(8), 2589-2598.

136. Feng, T., B. Lin, S. Zhang, N. Yuan, F. Chu, M. A. Hickner, C. Wang, L. Zhu, J. Ding, "Imidazolium-based organic–inorganic hybrid anion exchange membranes for fuel cell applications," *J. Membrane Science* **2016**, 508, 7-14.

135. Zhu, L., T. J. Zimudzi, N. Li, J. Pan, B. Lin, M. A. Hickner, "Cross-linking of Comb-Shaped Polymer Anion Exchange Membranes Via Thiol-ene Click Chemistry," *Polymer Chemistry* **2016**, 7(14), 2464-2475.

134. Chen C., J. Pan, J. Han, Y. Wang, L. Zhu, M. Hickner, L. Zhuang, "Varying the Microphase Separation Patterns of Alkaline Polymer Electrolytes," *J. Mater. Chem. A*, **2016**, 4, 4071-4081.

133. Zhu, L., J. Pan, Y. Wang, J. Han, L. Zhuang, M. A. Hickner, "Multi-Cation Side Chain Anion Exchange Membranes," *Macromolecules* **2016**, 49(3), 815-824.

132. Zimudzi, T. J., M. A. Hickner, "Signal Enhanced FTIR Analysis of Alignment in NAFION® Thin Films at SiO2 and Au Interfaces," *ACS Macro Lett.* **2016**, 5, 83-87.

131. Zigmond, J. S., K. A. Pollack, S. Smedley, J. E. Raymond, L. A. Link, A. Pavia-Sanders, M. A. Hickner, K. L. Wooley, Karen L., "Investigation of intricate, amphiphilic crosslinked hyperbranched fluoropolymers as anti-icing coatings for extreme environments," *J. Polym. Sci. Part A: Polym. Chem.* **2016**, 54(2), 238-244.

130. Pan, J., L. Zhu, J. Han, M. A. Hickner, "Mechanically Tough and Chemically Stable Anion Exchange Membranes from Rigid-Flexible Semi-Interpenetrating Networks," *Chem. Mater.* **2015**, 27(19), 6689-6698.

129. Chang, Y. A. D. Mohanty, S. B Smedley, K. Abu-Hakmeh, Y. H. Lee, J. E. Morgan, M. A. Hickner, S. S. Jang, C. Y. Ryu, C. Bae, "Effect of Superacidic Side Chain Structures on High Conductivity Aromatic Polymer Fuel Cell Membranes," *Macromolecules* **2015**, 48(19), 7117-7126.

128. Wallack, M. J., G. M. Geise,, M. C. Hatzell, M. A. Hickner, B. E. Logan, "Reducing nitrogen crossover in microbial reverse-electrodialysis cells by using adjacent anion exchange membranes and anion exchange resin," *Environmental Science: Water Research & Technology* **2015**, 1, 865-873.

127. Amel, A., S. B. Smedley, D. R. Dekel, M. A. Hickner, Y. Ein-Eli, "Characterization and Chemical Stability of Anion Exchange Membranes Cross-Linked with Polar Electron-Donating Linkers," *J. Electrochem. Soc.* **2015**, 162(9), F1047-F1055.

126. Adhikari, J. M., K. Vakhshouri, B. D. Calitree, A. Hexemer, M. A. Hickner, E. D. Gomez, "Controlling Crystallization to Improve Charge Mobilities in Transistors Based on 2,7-Dioctyl[1]benzothieno[3,2-b][1]benzothiophene," *J. Mater. Chem. C* **2015**, 3(34), 8799-8803.

125. Le, T., Z. Shang, L. Wang, N. Li, S. Vajjala Kesava, J. O'Connor, Y. Chang, C. Bae, C. Zhu, A. Hexemer, E. Gomez, A. Salleo, M. Hickner, E. D. Gomez, "Miscibility and acid strength govern contact doping of organic photovoltaics with strong polyelectrolytes," *Macromolecules* **2015**, 48(15), 5162-5171.

124. Singh, A. K., L. Cao, J. Ma, J. Seo, C. E. Bakis, Y. Zhang, M. A. Hickner, C. D. Rahn, "Design, manufacture and test of a novel structural battery based on sandwich construction," *J. Sandwich Structures and Materials* **2015**, 17(6) 666–690.

123. Zhang, J., F. Chen, X. Ma, X. Guan, D. Chen, M. A. Hickner, "Sulfonated polymers containing polyhedral oligomeric silsesquioxane (POSS) core for high performance proton exchange membranes," *Int. J. Hydrogen Energ.* **2015**, 40(22), 7135-7143.

122. Smedley, S. B., Y. Chang, C. Bae, M. A. Hickner, "Measuring water hydrogen bonding Distributions in proton exchange membranes using linear Fourier Transform Infrared spectroscopy," *Solid State Ionics* **2015**, 275, 66-70.

121. Leng, Y., L. Wang, M. A. Hickner, C.-Y. Wang, "Alkaline Membrane Fuel Cells with In-situ Cross-linked Ionomers," *Electrochimica Acta* **2015**, 152, 93-100.

120. Vaughn, D. D., J. Araujo, P. Meduri, J. F. Callejas, M. A. Hickner, R. E. Schaak, "Solution Synthesis of Cu3PdN Nanocrystals as Ternary Metal Nitride Electrocatalysts for the Oxygen Reduction Reaction," *Chemistry of Materials* **2014**, 26(21), 6226-6232.

119. Vargas-Barbosa, Nella M.; Geise, Geoffrey M.; Hickner, Michael A.; Mallouk, Thomas E. "Assessing the Utility of Bipolar Membranes for use in Photoelectrochemical Water-Splitting Cells," *ChemSusChem* **2014**, 7(11), 3017-3020.

118. Yang, W., W. He, F. Zhang, M. A. Hickner, B. E. Logan, "Single-Step Fabrication Using a Phase Inversion Method of Poly(vinylidene fluoride) (PVDF) Activated Carbon Air Cathodes for Microbial Fuel Cells," *Environmental Science & Technology Letters* **2014**, 1(10), 416-420.

117. Hoskins, D, L., X. Zhang, M. A. Hickner, B. E. Logan, "Spray-on polyvinyl alcohol separators and impact on power production in air-cathode microbial fuel cells with different solution conductivities," *Bioresource Technology* **2014**, 172, 156-161.

116. Liu, J., G. M. Geise, X. Luo, H. Hou, F. Zhang, Y. Feng, M. A. Hickner, B. E. Logan, "Patterned ion exchange membranes for improved power production in microbial reverse-electrodialysis cells," *J. Power Sources* **2014**, 271, 437-443.

115. Varcoe, J. R., P. Atanassov, D. R. Dekel, A. M. Herring, M. A. Hickner, P. A. Kohl, A. R. Kucernak, W. E. Mustain, K. Nijmeijer, K. Scott, T. Xu and L. Zhuang, "Anion-exchange membranes in electrochemical energy systems," *Energy Environ. Sci.* **2014**, 7, 3135-3191.

114. Geise, G. M, H. J. Cassady, D. R. Paul, Bruce E. Logan, M. A. Hickner, "Specific Ion Effects on Membrane Potential and the Permselectivity of Ion Exchange Membranes," *Phys. Chem. Chem. Phys.* **2014**, 16, 21673 - 21681.

113. Yang, W., F. Zhang, W. He, J. Liu, M. A. Hickner, B. E. Logan, "Poly(vinylidene fluoride-co-hexafluoropropylene) phase inversion coating as a diffusion layer to enhance the cathode performance in microbial fuel cells," *J. Power Sources* **2014**, 269, 379-384.

112. Chaloux, B. L., H. L. Ricks-Laskoski, J. B. Miller, K. M. Saunders, M. A. Hickner, "Probing Microphase Separation and Proton Transport Cooperativity in Polymer-Tethered 1H-Tetrazoles," *J. Polym. Sci. Part B: Polym. Phys*. **2014**, 52(21), 1375-1387.

111. Ricks-Laskoski, H., B. Chaloux, S. Deese, M. Laskoski, J. Miller, M. Buckley, J. Baldwin, M. A. Hickner, K. Saunders, C. Christensen, "Tetrazolation of Side Chains and Anhydrous Conductivity in a Hydrophobic Polymer," *Macromolecules* **2014**, DOI: 10.1021/ma501068j.

110. Wang, Y., S. Wang, M. Xiao, S. Song, D. Han, M. A. Hickner, Y. Meng, "Amphoteric ion exchange membrane synthesized by direct polymerization for vanadium redox flow battery application," *Int. J. Hydrogen Energ.* **2014**, 39(28), 16123-16131.

109. Mor, G. K., D. Jones, T. P. Le, P. J. Weathers, M. K. B. Woltermann, K. Vakhshouri, B. P. Williams, S. A. Tohran, R. Verduzco, M. A. Hickner, E. D. Gomez, "Contact doping with strong polyelectrolytes for organic photovoltaics," *Advanced Energy Materials* **2014**, 4, 1400439-1,6.

108. Kusoglu, A., D. Kushner, D. K. Paul, K. Karan, M. A. Hickner, A. Z. Weber, "Impact of Substrate and Processing on Confinement of Nafion Thin Films," *Advanced Functional Materials* **2014**, 24, 4763-4774.

107. Amel, A., L. Zhu, M. A. Hickner, Y. Ein-Eli, "Influence of the sulfone linkage on the stability of aromatic quaternary ammonium polymers for alkaline fuel cells," *J. Electrochem. Soc.* **2014**, 161(5), F615-F621.

106. Mohanty, A., Y.-B. Lee, L. Zhu, M. A. Hickner, C. Bae, "Anion Exchange Fuel Cell Membranes Prepared from C-H Borylation and Suzuki Coupling Reactions," *Macromolecules* **2014**, 47 (6), 1973–1980.

105. Li, N., L. Wang, M. A. Hickner, "Crosslinked Comb-shaped Anion Exchange Membranes with High Base Stability," *Chemical Communications* **2014**, 50(31), 4092-4095.

104. Wang, L., M. A. Hickner, "Low-Temperature Crosslinking of Anion Exchange Membranes," *Polymer Chemistry* **2014**, 5 (8), 2928-2935.

103. Geise, G.M., A. J. Curtis, M. C. Hatzell, M. A. Hickner, B. E. Logan, "Salt Concentration Differences Alter Membrane Resistance in Reverse Electrodialysis Stacks," *Environ. Sci. Technol. Lett.* **2014**, 1 (1), 36-39.

102. Agar, E., A. Benjamin, C. R. Dennison, D. Chen, M. A. Hickner, E. C. Kumbur, "Reducing Capacity Fade in Vanadium Redox Flow Batteries by Altering Charging and Discharging Currents," *J. Power Sources* **2014**, 246, 767-774.

101. Chen, D., M. A. Hickner, "Ion Clustering in Quaternary Ammonium Functionalized Benzylmethyl Containing Poly(arylene ether ketone)s," *Macromolecules* **2013**, 46 (23), 9270–9278.

100. Disabb-Miller, M. L., Y. Zha, A. J. DeCarlo, M. Pawar, G. N. Tew, M. A. Hickner, "Water Uptake and Ion Mobility in Cross-Linked Bis(terpyridine) Ruthenium-Based Anion Exchange Membranes," *Macromolecules* **2013**, 46 (23), 9279–9287.

99. Black, S., Y. Chang, C. Bae, M. A. Hickner, "FTIR Characterization of Water-Polymer Interactions in Superacid Polymers," *J. Phys. Chem. B* **2013**, 117 (50), 16266–16274.

98. Hickner, M. A., A. M. Herring, E. B. Coughlin, "Anion exchange membranes: Current status and moving forward," *J. Polym. Sci. Part B: Polym. Phys*. **2013**, 51(24), 1727–1735.

97. Geise, G. M., M. A. Hickner, Bruce E. Logan, "Ionic Resistance and Permselectivity Tradeoffs in Anion Exchange Membranes," *ACS Appl. Mater. Interfaces* **2013**, 5 (20), 10294–10301.

96. Geise, G. M., M. A. Hickner, B. E. Logan, "Ammonium Bicarbonate Transport in Anion Exchange Membranes for Salinity Gradient Energy," *ACS Macro Lett.* **2013**, 2 (9), 814–817.

95. Welsh, A. J., R. H. T. Wilke, M. A. Hickner, S. Trolier-McKinstry, "Low Cost, Damage-Free Patterning of Lead Zirconate Titanate Films," *J. Am. Ceram. Soc.* **2013**, 96 (9) 2799–280.

94. Yan, J., H. D. Moore, M. R. Hibbs, M. A. Hickner, "Synthesis and Structure–Property Relationships of Poly(sulfone)s for Anion Exchange Membranes," *J. Polym. Sci. Part B: Polym. Phys*. **2013**, 51(24), 1790–1798.

93. Wang, Y., S. Wang, M. Xiao, D. Han, M. A. Hickner, Y. Meng, "Layer-by-layer self-assembly of PDDA/PSS-SPFEK composite membrane with low vanadium permeability for vanadium redox flow battery," *RSC Advances* **2013**, 3(35), 15467-15474.

92. Chen D., M. A. Hickner, E. Agar, E. C. Kumbur, "Optimized Anion Exchange Membranes for Vanadium Redox Flow Batteries," *ACS Appl. Mater. Interfaces* **2013**, 5 (15), 7559–7566.

91. Pan, J., S. Wang, M. Xiao, M. Hickner, Y. Meng, "Layered zirconium phosphate sulfophenylphosphonates reinforced sulfonated poly (fluorenyl ether ketone) hybrid membranes with high proton conductivity and low vanadium ion permeability," *J. Membrane Science*, **2013**, 443, 19–27.

90. Li, N., Y. Leng, M. A. Hickner, C.-Y. Wang, "Highly Stable, Anion Conductive Comb-shaped Copolymers for Alkaline Fuel Cells," *J. Am. Chem. Soc.* **2013**, 135 (27), 10124–10133.

89. Chen, G., F. Zhang, B. E. Logan, M. A. Hickner, "Poly(vinyl alcohol) separators improve the coulombic efficiency of activated carbon cathodes in microbial fuel cells," *Electrochem. Commun.* **2013**, 34, 150-152.

88. Chen, D., M. A. Hickner, "V5+ Degradation of Sulfonated Radel Membranes for Vanadium Redox Flow Batteries," *Phys. Chem. Chem. Phys.* **2013**, 15 (27), 11299 - 11305.

87. Agar, E., K. W. Kner, Chen, D., M. A. Hickner, and E. C. Kumbur, "Species Transport Mechanisms Governing Capacity Loss in Vanadium Flow Batteries: Comparing Nafion® and Sulfonated Radel Membranes," *Electrochimica Acta* **2013**, 98, 66-74.

86. Chen, D., M. A. Hickner, E. Agar, E. C. Kumbur, "Optimizing Membrane Thickness for Vanadium Redox Flow Batteries," *J. Membrane Science* **2013**, 437, 108-113.

85. Modestino, M. A., F. I. Allen, D. K. Paul, S. K. Dishari, S. A. Petrina, M. A. Hickner, K. Karan, A. M. Minor, R. A. Segalman, A. Z. Weber, "Self-assembly and transport limitations in confined Nafion films," *Macromolecules* **2013**, 46(3), 867–873.

84. Chen, D., S. Kim, V. Sprenkle, M. A. Hickner, "Composite blend polymer membranes with increased proton selectivity and lifetime for vanadium redox flow batteries," *J. Power Sources* **2013**, 231, 301-306.

83. Dishari, S. K., M. A. Hickner, "Confinement and Proton Transfer in NAFION® Thin Films," *Macromolecules* **2013**, 46(2), 413-421.

82. Disabb-Miller, M. L., Z. D. Johnson, M. A. Hickner, "Ion Motion in Anion and Proton-Conducting Triblock Copolymers," *Macromolecules* **2013**, 46(3), 949–956.

81. Nunez S. A., M. A. Hickner, "^{1}H NMR Reaction Profiling of Chemical Stabilities in Anion Exchange Membranes," *ACS Macro Letters* **2013**, 2(1), 49–52.

80. Chen, D., M. A. Hickner, E. Agar and E. Kumbur, "Selective Anion Exchange Membranes for High Coulombic Efficiency Vanadium Redox Flow Batteries," *Electrochem. Commun.* **2013**, 26, 37-40.

79. Chang, Y., G. F. Brunello, J. Fuller, M. L. Disabb-Miller, M. E. Hawley, Y. S. Kim, M. A. Hickner, S. S. Jang, C. Bae, "Acidity Effects in Poly(sulfone)–based Proton Exchange Membranes," *Polym. Chem.* **2013**, 4, 272–281.

78. Wei, B. J. C. Tokash, G. Chen, M. A. Hickner, B. E. Logan, "Development and evaluation of carbon and binder loading in low-cost activated carbon cathodes for air-cathode microbial fuel cells," *RSC Advances* **2012**, 2(33), 12751-12758.

77. Chen, G., B. Wei, Y. Luo, B. E. Logan, M. A. Hickner, "High Power, High Efficiency Polymer Separators for Microbial Fuel Cells," *ACS Applied Materials and Interfaces* **2012**, 4 (12), 6454–6457.

76. Chen, D., M. A. Hickner, "Degradation of Imidazolium and Quaternary Ammonium Functionalized Poly(fluorenyl ether ketone sulfone)s for Anion Exchange Membranes," *ACS Appl. Mater. Interfaces* **2012**, 4 (11), 5775–5781.

75. Chen, D., M. A. Hickner, S. Wang, J. Pan, M. Xiao, Y. Meng, "Synthesis and characterization of quaternary ammonium functionalized fluorene-containing cardo polymers for potential anion exchange membrane water electrolyzer applications," *Int. J. Hydrogen Energ.* **2012**, 37(21), 16168-16176.

74. Zhang, F., G. Chen, M. A. Hickner, B. E. Logan, "Novel Anti-flooding Cathodes Constructed Using Poly(dimethylsiloxane) (PDMS) binder for Microbial Fuel Cells," *J. Power Sources* **2012**, 218(15), 100-105.

73. Chen, G., B. Wei, B. E. Logan, M. A. Hickner, "Cationic Fluorinated Polymer Binders for Microbial Fuel Cell Cathodes," *RSC Advances* **2012**, 2, 5856-5862.

72. Leng, Y., G. Chen, A. J. Mendoza, T. B. Tighe, M. A. Hickner, C.-Y. Wang, "Solid-State Water Electrolysis with An Alkaline Membrane," *J. Am. Chem. Soc.* **2012**, 134 (22), 9054–9057.

71. Chen, D., S. Kim, L. Li, G. Yang, M. A. Hickner, "Stable Fluorinated Sulfonated Poly(arylene ether) Membranes for Vanadium Redox Flow Batteries," *RSC Advances* **2012**, 2, 8087-8094.

70. Chen, D., M. A. Hickner, S. Wang, J. Pan, M. Xiao, Y. Meng, "Directly Fluorinated Polyaromatic Composite Membranes for Vanadium Redox Flow Batteries," *J. Membrane Sci.* **2012**, 415–416, 1, 139-144.

69. Zha, Y., M. L. Disabb-Miller, Z. D. Johnson, M. A. Hickner, G. N. Tew, "Metal Cation-Based Anion Exchange Membranes," *J. Am. Chem. Soc.* **2012**, 134 (10), 4493–4496.
-Featured in C&E News as "News of the Week"

68. Dishari, S. K., M. A. Hickner, "Antiplasticization and Water Uptake of NAFION® Thin Films," *ACS Macro Lett.* **2012**, 1, 291−29.
- Article featured on Journal cover

67. Hickner, M. A., "Water Mediated Transport in Ion-Containing Polymers," *J. Polym. Sci. Part B: Polym. Phys*. **2012**, 50, 9–20.
- Invited Review

66. Yan, J., X. Huang, H. D. Moore, C. Y. Wang, M. A. Hickner, "Transport properties and fuel cell performance of sulfonated poly(imide)s proton exchange membranes," *Int. J. Hydrogen Energ.* **2012**, 37(7), 6153–6160.

65. Zhang, L., B. L. Chaloux, T. Saito, M. A. Hickner, J. L. Lutkenhaus, "Ion Conduction in Poly(ethylene oxide) Ionically Assembled Complexes," *Macromolecules* **2011**, 44(24), 9723-9730.

64. Chang, Y., G. F. Brunello, J. Fuller, M. Hawley, Y. S. Kim, M. Disabb-Miller, M. A. Hickner, S. S. Jang, C. Bae, "Aromatic Sidechain Ionomers: Acidity, Hydration, and Proton Conductivity," *Macromolecules* **2011**, 44(21), 8458–8469.

63. Rostamikia, G., A. J. Mendoza, M. A. Hickner, M. J. Janik, "First-principles based microkinetic modeling of borohydride oxidation on a Au(111) electrode," *J. Power Sources* **2011**, 196(22), 9228-9237.

62. Xu, K., H. Oh, M. A. Hickner, Q. Wang, "Highly Conductive Aromatic Ionomers with Perfluorosulfonic Acid Side Chains for Elevated Temperature Fuel Cells," *Macromolecules* **2011**, 44 (12), 4605–4609.

61. Weber, R. L., Y. Ye, S. M. Banik, Y. A. Elabd, M. A. Hickner, M. K. Mahanthappa, "Thermal and Ion Transport Properties of Hydrophilic and Hydrophobic Polymerized Styrenic Imidazolium Ionic Liquids," *J. Polym. Sci. Part B: Polym. Phys*. **2011**, 49(18), 1287-1296.

- Article featured on Journal cover

60. Patel, R. J., T. B. Tighe, I. Ivanov, M. A. Hickner, "Electro-optical Properties of Electropolymerized Poly(3-hexylthiophene)/Carbon Nanotube Thin Film Composites," *J. Polym. Sci. Part B: Polym. Phys*. **2011**, 49(17), 1269-1275.

59. Gross, M. L., K. R. Zavadil, M. A. Hickner, "Chemical Mapping and Electrical Conductivity of Carbon Nanotube Patterned Arrays," *Journal of Materials Chemistry* **2011**, 21, 14259-14264.

58. Kim, S., T. Tighe, B. Schwenzer, J. Yan, J. Zhang, J. Liu, Z. Yang, M. A. Hickner, "Chemical and Mechanical Degradation of Sulfonated Poly(sulfone) Membranes in Vanadium Redox Flow Batteries," *Journal of Applied Electrochemistry* **2011**, 41, 1201–1213.

57. Mendoza, A. J., M. A. Hickner, J. Morgan, K. Rutter, C. Legzdins, "Raman Spectroscopic Mapping of the Carbon and PTFE Distribution in Gas Diffusion Layers," *Fuel Cells* **2011**, 11(2), 248-254.

56. Xie, H., T. Saito, M. A. Hickner, "Zeta Potential of Ion-Conductive Membranes by Streaming Current Measurements," *Langmuir* **2011**, 27 (8), 4721–4727.

55. Saito, T., T. H. Roberts, T. E. Long, B. E. Logan, M. A. Hickner, "Neutral Hydrophilic Cathode Catalyst Binders for Microbial Fuel Cells," *Energy & Environmental Science* **2011**, 4(3), 928-934.

54. Lee, D. K., T. Saito, A. J. Benesi, M. A. Hickner, H. R. Allcock, "Characterization of Water in Proton Conducting Membranes by Deuterium NMR T1 Relaxation," *J. Phys. Chem. B.* **2011**, 115(5), 776-783.

53. Watson, V. J., T. Saito, M. A. Hickner, B. E. Logan, "Polymer coatings as separator layers for microbial fuel cell cathodes," *J. Power Sources* **2011**, 196(6), 3009-3014.

52. Elabd, Y. A., M. A. Hickner, "Block Copolymers for Fuel Cells," *Macromolecules* **2011**, 44(1), 1-11.

- Perspective Article featured on Journal cover.

- Over 100 citations

51. Zhang, F., M. D. Merrill, J. C. Tokash, T. Saito, S. Cheng, M. A. Hickner, B. E. Logan, "Mesh Optimization for Microbial Fuel Cell Cathodes Constructed around Stainless Steel Mesh Current Collectors," *J. Power Sources* **2011**, 196(3), 1097-1102.

50. Saito, T., M. Mehanna, X. Wang, R. Cusick, Y. Feng, B. E. Logan, M. A. Hickner, "Effect of nitrogen addition on the performance of microbial fuel cell anodes," *Bioresource Technology* **2011**, 102(1), 395-398.

49. Vaughn, D., R. Patel, M. A. Hickner, R. E. Schaak, "Single Crystal Colloidal Nanosheets of GeS and GeSe," *J. Am. Chem. Soc.* **2010**, 132(43), 15170–15172.

48. Kim, S., J. Yan, B. Schwenzer, J. Zhang, L. Li, J. Liu, Z. Yang, M. A. Hickner, "Investigation of Sulfonated Poly(phenylsulfone) Membrane for Vanadium Redox Flow Batteries," *Electrochem. Comm.* **2010**, 12, 1650–1653.

47. Schaefer, Z. L., M. L. Gross, M. A. Hickner, R. E. Schaak, "Uniform Hollow C-Shells: Nano-Engineered Graphitic Supports for Improved Oxygen Reduction Catalysis," *Angew. Chemie Int. Edit.* **2010**, 49(39), 7045-704.

46. Mehanna, M., T. Saito, J. Yan, M. A. Hickner, X. Cao, X. Huang, B. E. Logan, "An Air-Cathode Microbial Desalination Cell," *Energy & Environmental Science* **2010**, 3, 1114-1120.

45. Moore, H. D., T. Saito, M. A. Hickner "Morphology and Transport Properties of Midblock-sulfonated Triblock Copolymers," *J. Mater. Chem.* **2010**, 20, 6316-6321.

44. Xu, K., C. Chanthad, M. A. Hickner, Q. Wang, "Highly Selective Proton Conductive Networks Based on Chain-end Functionalized Polymers with Perfluorosulfonate Side Groups", *J. Mater. Chem.* **2010**, 20, 6291-6298.

43. Hickner, M. A., "Ion-Containing Polymers: Functional Materials for New Energy and Clean Water," *Materials Today* **2010**, 13(5), 34-41.

42. Jang, W.-S., T. Saito, M. A. Hickner, J. L. Lutkenhaus "Electrostatic Assembly of Poly(ethylene glycol) Nanotubes, " *Macromolecular Rapid Communications* **2010**, 31(8), 745-751.

41. Saito, T., M. D. Merrill, V. J. Watson, B. E. Logan, M. A. Hickner, "Investigation of Ionic Polymer Cathode Binders for Microbial Fuel Cells," *Electrochimica Acta* **2010**, 55, 3398–3403.

40. Yan, J., M. A. Hickner "Anion Exchange Membranes by Bromination of Benzylmethyl-containing Poly(sulfone)s," *Macromolecules* **2010**, 43, 2349–2356.
- Over 100 citations

39. Xu, K., K. Li, C. S. Ewing, M. A. Hickner, Q. Wang, "Synthesis of Proton Conductive Polymers with High Electrochemical Selectivity," *Macromolecules* **2010**, 43 (4), 1692–1694.

38. Zhang, F., T. Saito, S. Cheng, M. A. Hickner, B. E. Logan, "Microbial Fuel Cell Cathodes With Poly(dimethylsiloxane) Diffusion Layers Constructed around Stainless Steel Mesh Current Collectors," *Environmental Science & Technology* **2010**, 44 (4), 1490–1495.

37. Saito, T., H. D. Moore, M. A. Hickner, "Synthesis of Mid-block Sulfonated Triblock Copolymers," *Macromolecules* **2010**, 43 (2), 599-601.

36. Hickner, M. A., K. S. Chen, N. P. Siegel, "Elucidating Liquid Water Distribution and Removal in an Operating Proton Exchange Membrane Fuel Cell via Neutron Radiography," *ASME Journal of Fuel Cell Science and Technology* **2010**, 7(1), 011001.

35. Hickner, M. A., N. P. Siegel, K. S. Chen, D. S. Hussey, D. L. Jacobson, "Observations of Transient Flooding in a Proton Exchange Membrane Fuel Cell Using Time-Resolved Neutron Radiography," *J. Electrochem. Soc.* **2010**, 157(1), B32-B38.

34. Gross, M. L., M. A. Hickner, "Using Cyclic Voltammetry to Measure Bandgap Modulation of Functionalized Carbon Nanotubes," *Electrochem. Solid-State Lett.* **2010**, 13(2), K5-K7.

33. Xu, K., C. Chanthad, M. R. Gadinski, M. A. Hickner, Q. Wang, "Acid-Functionalized Polysilsesquioxane-Nafion Composite Membranes with High Proton Conductivity and Enhanced Selectivity," *ACS Appl. Mater. Interfaces* **2009**, 1(11), 2573-2579.

32. Mangiagli, P. M., C. S. Ewing, K. Xu, Q. Wang, M. A. Hickner, "Dynamic Water Uptake of Flexible Ion-Containing Polymer Networks," *Fuel Cells* **2009**, 9(4), 432-438.

31. Song, Y., M. A. Hickner, S. R. Challa, R. M. Dorin, R. M. Garcia, H. Wang, Y.-B. Jiang, P. Li, Y. Qiu, F. van Swol, C. J. Medforth, J. E. Miller, T. Nwoga, K. Kawahara, W. Li, J. A. Shelnutt, "Evolution of Dendritic Platinum Nanosheets Into Ripening-Resistant Holey Sheets," *Nano Letters* **2009**, 9(4), 1534-1539.

30. Roy, A., M. A. Hickner, O. Lane, J. E. McGrath, "Investigation of Membrane Electrode Assembly (MEA) Processing Parameters on Performance for Wholly Aromatic Hydrocarbon-based Proton Exchange Membranes," *J. Power Sources* **2009**, 191(2), 550-554.

29. Staser, J. A., K. Norman, C. H. Fujimoto, M. A. Hickner, J. W. Weidner, "Transport Properties and Performance of Polymer Electrolyte Membranes for the Hybrid Sulfur Electrolyzer," *J. Electrochem. Soc.* **2009**, 156(7), B842-B847.

28. Hickner, M. A., G. J. Tudryn, T. M. Alam, M. R. Hibbs, C. H. Fujimoto, "Polymers with Tethered Anionic and Cationic Groups as Membranes for Fuel Cells," *Macromolecular Symposia* **2009**, 279, 59-62.

27. Roy, A., M. A. Hickner, B. R. Einsla, W. L. Harrison, J. E. McGrath, "Synthesis and Characterization of Partially Disulfonated Hydroquinone-based Poly(arylene ether sulfone) Random Copolymers for Application as Proton Exchange Membranes," *J. Poly. Sci., A: Poly. Chem.* **2009**, 47(2), 384-391.

26. Weber, A. Z., M. A. Hickner, "Modeling and High-Resolution-Imaging Studies of Water-Content Profiles in a Polymer-Electrolyte-Fuel-Cell Membrane-Electrode Assembly," *Electrochimica Acta* **2008**, 53(26), 7668-7674.

25. Hibbs, M. R., M. A. Hickner, T. M. Alam, S. K. McIntyre, C. H. Fujimoto, C. J. Cornelius, "Transport Properties of Hydroxide and Proton Conducting Membranes," *Chem. Mater.* **2008**, 20(7), 2566-2573.
- Over 100 citations

24. Hickner, M. A., N. P. Siegel, K. S. Chen, D. S. Hussey, D. L. Jacobson, M. Arif, "In-situ High Resolution Neutron Radiography of Cross-sectional Liquid Water Profiles in Proton Exchange Membrane Fuel Cells," *J. Electrochem. Soc.* **2008**, 155(4), B427-B434.
- Over 100 citations

23. Hickner, M. A., N. P. Siegel, K. S. Chen, D. S. Hussey, D. L. Jacobson, M. Arif, "Understanding Liquid-Water Distribution and Removal Phenomena in an Operating PEMFC via Neutron Radiography," *J. Electrochem. Soc.* **2008**, 155(3), B294-B302.

22. Wiles, K. B., B. J. Akle, M. A. Hickner, M. Bennett, D. J. Leo, J. E. McGrath, "Directly copolymerized poly(arylene sulfide sulfone) and poly(arylene ether sulfone) disulfonated copolymers for use in ionic polymer transducers," *J. Electrochem. Soc.* **2007**, 154(6), P77-P85.

21. Roy, A., M. A. Hickner, X. X. Yu, Y. Li, T. E. Glass, J. E. McGrath, "Influence of Chemical Composition and Sequence Length on the Transport Properties of Proton Exchange Membranes," *J. Poly. Sci., B: Poly. Phys.* **2006**, 44, 2226-2239.
- Over 100 citations

20. Hickner, M. A., N. P. Siegel, D. N. McBrayer, K. S. Chen, D. S. Hussey, D. L. Jacobson, M. Arif, "Real-Time Imaging of Liquid Water in an Operating Proton Exchange Membrane Fuel Cell," *J. Electrochem. Soc.* **2006**, 153(5), A902-A908.
- Over 100 citations

19. Hickner, M. A., C. H. Fujimoto, C. J. Cornelius, "Transport in sulfonated poly(phenylene)s: Proton conductivity, permeability, and the state of water," *Polymer* **2006**, 47(11), 4238-4244.

18. Liu, D., M. A. Hickner, S. W. Case, J. J. Lesko, "Relaxation of Proton Conductivity and Stress in Proton Exchange Membranes Under Strain," *J. Eng. Mater - T ASME* **2006**, 128(4), 503-508.

17. Hickner, M. A., B. Pivovar, "The chemical and structural nature of proton exchange membrane fuel cell properties," *Fuel Cells* **2005**, 5(2), 213-229.
- Over 150 citations

16. Harrison, W. L., M. A. Hickner, Y. S. Kim, J. E. McGrath, "Poly(arylene ether sulfone) copolymers and related systems from disulfonated monomer building blocks: synthesis, characterization, and performance - a topical review," *Fuel Cells* **2005**, 5(2), 201-212.
- Review article with over 150 citations

15. Fujimoto, C. H., M. A. Hickner, C. J. Cornelius, D. A. Loy, "Ionomeric poly(phenelene) prepared by Diels-Alder Polymerization: Synthesis and physical properties of a novel polyelectrolyte," *Macromolecules* **2005**, 38(12), 5010-5016.
- Over 100 citations.

14. Akle, B. J., D. J. Leo, M. A. Hickner, J. E. McGrath, "Correlation of capacitance and actuation in ionomeric polymer transducers," *Journal of Materials Science* **2005**, 40(14), 3715-3724.

13. Webb, V., M. Hickner, D. Baird, J. Lesko, S. Case, "Durability and performance of press molded polymer composite monopolar plates," *Science and Engineering of Composite Materials* **2005**, 12(1-2), 35-41.

12. Einsla, B. R., Y. S. Kim, M. A. Hickner, Y.-T. Hong, M. Hill, B. S. Pivovar, J. E. McGrath, "Sulfonated naphthalene dianhydride based polyimide copolymers for proton-exchange-membrane fuel cells. II. Membrane properties and fuel cell performance," *Journal of Membrane Science* **2005**, 255(1-2), 141-148.
- Over 100 citations

11. Chen, K. S., M. A. Hickner, D. R. Noble "Simplified models for predicting the onset of liquid water droplet instability at the gas diffusion layer/gas flow channel interface in a polymer electrolyte fuel cell," *Int. J. Energ. Res.* **2005**, 29, 1113-1132.

10. Every, H. A., M. A. Hickner, J. E. McGrath, T. A. Zawodzinski, "An NMR study of methanol diffusion in polymer electrolyte fuel cell membranes," *J. Membr. Sci.* **2005**, 250(1-2), 183-188.

9. Hickner, M.A., H. Ghassemi, Y.S. Kim, B.R. Einsla, J.E. McGrath, "Alternative polymer systems for proton exchange membranes (PEMs)," *Chem. Rev.* **2004**, 104, 4587-4612.
- Review article with over 1400 citations

8. Kim, Y. S., M. A. Hickner, L. Dong, B. S. Pivovar, J. E. McGrath, "Sulfonated poly(arylene ether sulfone) copolymer proton exchange membranes: composition and morphology effects on the methanol permeability," *J. Membrane Sci.* **2004**, 243(102), 317-326.
- Over 100 citations

7. Kim Y. S., L. Dong, M. Hickner, T. E. Glass, J.E. McGrath, "State of water of disulfonated poly(arylene ether sulfone) copolymers and a perfluorosulfonic acid copolymer (Nafion) and its effect on physical and electrochemical properties," *Macromolecules* **2003**, 36(17), 6281-6285.
- Over 200 citations

6. Kim, Y., F. Wang, M. Hickner, T. Zawodzinski, J. E. McGrath, "Properties and interaction of heteropolyacid ($H_3PW_{12}O_{40}$)/sulfonated poly(arylene ether sulfone) composite membranes for fuel cell applications," *J. Membr. Sci.* **2003**, 212, 263-282.
- Over 250 citations

5. Kim Y. S., F. Wang, M. Hickner, S. McCartney, Y. T. Hong, W. Harrison, T.A. Zawodzinski, J.E. McGrath, "Effect of acidification treatment and morphological stability of sulfonated poly(arylene ether sulfone) copolymer proton exchange membranes for fuel cell use above 100°," *J. Poly. Sci., B: Poly. Phys.* **2003**, 41(22), 2816-2828.
- Over 100 citations

4. Kim Y. S., L. Dong, M. Hickner, B.S. Pivovar, J. E. McGrath, "Processing induced morphological development in hydrated sulfonated poly(arylene ether sulfone) copolymer membranes," *Polymer* **2003**, 44(19), 5729-5736.

3. Wang, F., M. Hickner, Y. Kim, T. Zawodzinski, J. E. McGrath, "Direct polymerization of sulfonated poly(arylene ether sulfone) random (statistical) copolymers: candidates for new proton exchange membranes," *J. Membr. Sci.* **2002**, 197, 231-242.
- Over 700 citations

2. O'Donnell, B.R., M. Hickner, B.A. Barna, "Economic risk analysis using analytical and monte carlo techniques," *Chem. Eng. Education* **2002**, 36(2).

1. Wang, F., M. Hickner, Q. Ji, W. Harrison, J.B. Mecham, T. Zawodzinski, J.E. McGrath, "Synthesis of highly sulfonated poly(arylene ether sulfone) random (statistical) copolymers via direct polymerization," *Macromolecular Symposia* **2001**, 175, 387.
- Over 200 citations

List of non-peer reviewed proceedings and conference papers with American Chemical Society and Electrochemical Society available on request.

Book Chapters

4. Pawar, M. S., Y. Zha, M. L. Disabb-Miller, Z. D. Johnson, M. A. Hickner, G. Tew, "Metal-ligand based anion exchange membranes," in Polymer Composites for Energy Harvesting, Conversion, and Storage, ACS Symposium Series Volume 1161, 127-146, eds L. Li, W. Wong-Ng and J. Sharp, American Chemical Society: Washington, DC, DOI: 10.1021/bk-2014-1161.ch006, Published July 7, 2014.

3. J. E. McGrath, M. A. Hickner, R. Höfer, Polymers for a Sustainable Environment and Green Energy, Vol. 10 in: K. Matyjaszewski, M. Möller (eds.) Polymer Science: A Comprehensive Reference, Elsevier, Amsterdam, Oxford, Waltham 2012.

2. M. A. Hickner, "Proton Exchange Membrane Nanocomposites" in Functional Polymer Nanocomposites for Energy Storage and Conversion, ACS Symposium Series Volume 1034, 155-170, eds Q. Wang and L. Zhu, American Chemical Society: Washington, DC, DOI: 10.1021/bk-2010-1034, Published March 11, 2010.

1. D. S. Hussey and M. A. Hickner, "Neutron Radioscopy: Industrial and Scientific Applications" in Encyclopedia of Analytical Chemistry, Eds. R.A. Meyers, John Wiley: Chichester, DOI: 9780470027318. Published 15th March 2010.

Patents

12. Periyasamy, M. R. R. Campbell, E. Sassano, W. J. Hajduczek, M. A. Hickner, L. Peeke, "Method For Forming Layered Thermoset Silicone and Thermoplastic Articles Using Additive Manufacturing, Articles Formed Therefrom and Apparatus for Use Therein," U.S. Patent App. 20210299949 filed September **2021**.

11. Yandrasits, M. A., C. A. Laskowski, T. M. Gillard, M. Hickner, L. Zhu, "Anion exchange membranes based on polymerization of long chain alpha olefins," US Patent App. 20210032378 filed February **2021**.

10. Rahn, C., C. Bakis, Y. Zhang, M. Hickner "Sandwich panels with battery cores," U.S. and international patent application filed January **2014**, application #US 20160351939.

9. Shelnutt, J. A., W. Li, Y. Song, M. A. Hickner, "Dendritic metal nanostructures for fuel cells and other applications" U.S. 8,574,789 **2013**.

8. Li, W., T. Kawamura, T. Nagami, H. Takahashi, J. Muldoon, J. A. Shelnutt, Y. Song, J. E. Miller, M. A. Hickner, C. Medforth, "Photocatalytic methods for preparation of electrocatalyst materials," U.S. 8,541,146 **2013**.

7. McGrath, J. E., M. Hickner, F. Wang, Y.-S. Kim, "Ion-conducting sulfonated polymeric materials," U.S. 8,383,763 **2013**.

6. Hibbs, M., C. H. Fujimoto, K. Norman, M. A. Hickner, "Epoxy-crosslinked sulfonated poly(phenylene) Copolymer Proton Exchange Membranes," U.S. 7,816,482 **2010**.

5. McGrath, J. E., M. Hickner, F. Wang, Y.-S. Kim, "Ion-conducting sulfonated polymeric materials," U.S. 7,361,729 **2008** and 7,790,837 **2010**; European patent, EP 1 327 278 B1.

4. McGrath, J. E., M. Hickner, "Sulfonated polymer composition for forming fuel cell electrodes," U.S. 7,790,314 **2010** and 7,544,764 **2009**.

3. Cornelius, C. J., C. H. Fujimoto, M. A. Hickner, **"**Sulfonated polyphenylene polymers useful for polymer electrolyte membranes and nanocomposites," U.S. 7,301,002 **2007**.

2. McGrath, J. E., M. Hickner, F. Wang, Y.-S. Kim, "Ion-conducting sulfonated polymeric materials," Japan 2002-528869.

1. McGrath, J. E., M. Hickner, "Sulfonated polymer composition for forming fuel cell electrodes," U.S. 7,544,764 and 7,790,314, Canadian patent 2,481,343.

Lectures and Conference Activities *denotes invited talks

205. * "The Effects of Water Binding and Morphology on Proton Transport in Polymer Membranes," Invited lecture at General Motors, Pontiac MI, April 27, 2023.

204. *"Advanced Batteries and Graduate School: Where to Chemical Engineers Fit?," Invited talk at 2023 MSU AIChE chapter meeting, East Lansing, MI, March 12, 2023.

203. *"Synthesis of Ion Exchange Membranes for Large-Scale Energy Conversion and Storage," Invited talk at 2022 AIChE Annual Meeting, Polymer Synthesis and Reaction Engineering session, Phoenix, AZ November 14, 2022.

205. *"3D Printed Membranes for Next-Generation Energy and Water Applications," Invited talk at The ASTM International Conference on Additive Manufacturing (ICAM 2022), Orlando, FL November 1, 2022.

204. *"Polymer Membranes for Large-Scale Energy Conversion and Storage," Invited lecture at University of Illinois Chicago, Department of Chemical Engineering, Chicago, IL October 27, 2022.

203. *"Asymmetric Transport in Bipolar Membranes," Invited talk at Polymers for Fuel Cells, Energy Storage, and Conversion, an ACS Polymer Chemistry Division workshop, Napa, CA, May 16th, 2022.

202. *"Novel Membranes and Ionomers," Invited talk at DOE H2-AMP Workshop, Online, March 20, 2022.

201. *"Transport in Polymer Membranes for Large-Scale Energy Conversion and Storage," Invited talk at American Physical Society March Meeting, Transport in Polymers, DPOLY Division, Chicago, IL March 14, 2022.

200. *"3D Printed Polymer Membranes," Invited lecture at Penn State University, EMS 125th Anniversary Symposium, University Park, PA April 10, 2021.

199. *"Polymer Membranes for Large-Scale Energy Conversion and Storage," Invited lecture at Bucknell University, Department of Chemical Engineering, Lewisburg, PA February 12, 2021.

198. *"Polymer Membranes for Large-Scale Energy Conversion and Storage," Invited lecture for Penn State Electrochemistry Club, University Park, PA December 14, 2020.

197. *"Polyolefin Anion Exchange Membranes," Invited talk at American Chemical Society Spring 2020 National Meeting & Expo, Designing Polymers for Electrochemical Energy Conversion & Storage, PMSE Division, Philadelphia, PA April 30, 2020.

196. *"Polymer Membranes for Large-Scale Energy Conversion and Storage," Invited lecture at Virginia Tech, Department of Chemistry, Blacksburg, VA February 27, 2020.

195. *"Polymer Membranes for Large-Scale Energy Conversion and Storage," Invited lecture at Michigan State University, Department of Chemical Engineering and Materials Science, East Lansing, MI February 21, 2020.

194. *"Polymers Containing Acidic or Basic Groups," Invited talk at Toyota Research Center, Ann Arbor, MI December 20, 2019.

193. *"Polymers Containing Acidic or Basic Groups," Invited talk at The University of Pennsylvania, Advanced Membrane Workshop, Philadelphia, PA December 17, 2019.

192. *" Ion-Conducting Membranes for Large-Scale Energy Storage," Invited talk at Materials Research Society Fall 2019 National Meeting, Session on Advanced Membranes for Energy-Efficient Molecular Separation and Ion Conduction, Boston, MA December 2, 2019.

191. *"Polymer Membranes for Large-Scale Energy Conversion and Storage," Invited lecture at University of Wyoming, Department of Mechanical Engineering, Laramie, WY October 31, 2019.

190. *"Polymer Membranes for Large-Scale Energy Conversion and Storage," Keynote lecture at 5th International Symposium on Energy Chemistry & Materials, Fudan University, Shanghai, China October 20th, 2019.

189. * "Polyolefin Anion Exchange Membranes: Fundamentals, Membranes, and Devices," Invited lecture at Cornell University, Center for Alkaline-Based Electrochemical Systems, Ithaca, NY October 11, 2019.

188. *"Polymer Membranes for Large-Scale Energy Conversion and Storage," Invited lecture at Louisiana State University, Department of Chemical Engineering, Baton Rouge, LA September 13, 2019.

187. *"Using quantitative IR spectroscopy to probe thin polymer films," Invited talk at American Chemical Society Spring 2019 National Meeting & Expo, Young Industrial Polymer Scientist Award Symposium, POLY Division, San Diego, CA August 27, 2019.

186. *"Toughening Anion Exchange Membranes," Invited talk at American Chemical Society Spring 2019 National Meeting & Expo, Toughening of Networks & Gels through Molecular Design, PMSE Division, San Diego, CA August 27, 2019.

185. *"New Polymer Structures for Anion Exchange Membranes," Invited talk presented at the 235th Meeting of the Electrochemical Society, An Invited Symposium on Advances and Perspectives on Modern Polymer Electrolyte Fuel Cells, Dallas, TX, May 29th, 2019.

184. *"Membrane Design Principles and Characterization Methods," Roundtable on Ion Selective Membranes in CO2 Electrolysis, CIFAR Symposium, Pittsburg PA May 15, 2019.

183. "Using quantitative IR spectroscopy to probe thin polymer films," Invited talk at American Chemical Society Spring 2019 National Meeting & Expo, Cooperative Research Award Symposium, PMSE Division, Orlando, FL April 3, 2019.

182. *"New ion transport membranes for large-scale energy storage," Invited talk at American Chemical Society Spring 2019 National Meeting & Expo, Transport in Polymer Membranes, POLY Division, Orlando, FL April 2, 2019.

181. *"Ionic Materials - Applications and Future Prospects," Invited talk at American Chemical Society Spring 2019 National Meeting & Expo, ACS Award in Applied Polymer Science Symposium, PMSE Division, Orlando, FL April 1, 2019.

180. *"Polyolefin-based Anion Exchange Membranes," Invited talk at Polymers for Fuel Cells, Energy Storage, and Conversion, an ACS Polymer Chemistry Division workshop, Asilomar, CA, Feb. 25th, 2019.

179. *"Polymer Membranes for Large-Scale Energy Conversion and Storage," Invited lecture at New York University, Department of Chemical Engineering, New York, NY October 12th, 2018.

178. *"The Effects of Water Binding and Morphology on Proton Transport in Polymer Membranes," Invited talk presented at the AiMES 2018 Joint International meeting of ECS and SMEQ, Cancun, Mexico, October 3rd, 2018.

177. *"Designing Hydroxide-Conducting Polymer Membranes," Invited presentation at 19th Solid State Proton Conductors, Stowe, VT Sept 19, 2018.

176. *"Polymers Containing Acidic and Basic Groups," Invited lecture at Case Western Reserve University, Department of Macromolecular Science and Engineering, Cleveland, OH September 7, 2018.

175. * "Polymer Membranes for Large-Scale Energy Conversion and Storage," Invited lecture at Case Western Reserve University, Department of Chemical Engineering, Cleveland, OH September 6, 2018.

174. *"Polyolefin-Based Anion Exchange Membranes," Invited presentation at 16th International Symposium on Polymer Electrolytes, Yokohama, Japan June 26, 2018.

173. *" Polymer Membranes for Large-Scale Energy Conversion and Storage," Invited lecture at Tokyo Institute of Technology, Department of Chemical Engineering, Yokohama, Japan June 22, 2018.

172. * "Polymers Containing Acidic and Basic Groups," Invited lecture at UT Austin, Department of Chemical Engineering, Austin, Texas December 13, 2017.

171. * "Toughening Anion Exchange Membranes," Invited talk at 4th US-Mexico Symposium on Advances in Polymer Science – MACROMEX 2017, Los Cabos, Mexico, December 5, 2017.

170. * "Polymer Membranes for Large-Scale Energy Conversion and Storage," Invited lecture at Texas A&M University, Department of Chemical Engineering, College Station, Texas November 3, 2017.

169. * "Membranes With Tethered Basic Groups," Invited lecture at King Abdullah University of Science and Technology (KAUST), Advanced Membranes and Porous Materials (AMPM) Center, Thuwal, Saudi Arabia, October 10, 2017.

168. * "Micropatterned Membranes for Energy, Water, and Separation Applications," Invited lecture at SABIC Advanced Manufacturing Seminar, Plastic Applications Development Center (SPADC), Riyadh, Saudi Arabia, Oct 2, 2017.

167. * "Polymer Membranes for Large-Scale Energy Conversion and Storage," Invited presentation at Arkema, King of Prussia, PA August 31, 2017.

166. * "Polymer Membranes for Large-Scale Energy Conversion and Storage," Invited presentation at 21st International Conference on Solid State Ionics, Padova, Italy June 15, 2017.

165. * "Polymer Membranes for Large-Scale Energy Conversion and Storage," Invited lecture at 3M Company, St. Paul, Minnesota June 12, 2017.

164. * "3D Printing of Micro-patterned Anion Exchange Membranes for Green Energy and Clean Water Applications," Invited lecture at Polytechnic University of Milan, Department of Energy, Milan, Italy May 22, 2017.

163. * "Additive Manufacturing Technologies for Polymer Membranes," Invited lecture at European Polymer Forum 8th Summer School on Transport Phenomena in Polymers and Hybrid Materials, Gragnano, Italy May 19, 2017.

162. * "3D Printing of Functional Micro-Patterned Membranes for Water and Energy Applications," Introductory Speaker for the Taylor Lecture, Department of Materials Science and Engineering, University Park, PA, April 27, 2017.

161. * "Structured Anion Exchange Membranes," Invited talk at CARISMA 2017 – European Coordination Fuel Cell Network Conference, Newcastle, UK, April 10th, 2017.

160. * "New Membranes for Aqueous Batteries," Invited talk at International Battery Seminar, Flow Batteries – Deliver the Right Charge at the Right Time, Ft. Lauderdale, FL, March 23rd, 2017.

159. * "New Polymer Structures for Anion Exchange Membranes," Invited talk at APS March Meeting, Ion Containing Polymers - The Role of Structure and Dynamics I, New Orleans, LA, March 13th, 2017.

158. * "3D Printing of Micro-patterned Anion Exchange Membranes for Green Energy and Clean Water Applications," Invited lecture at Michigan State University, Department of Chemical Engineering, East Lansing, Michigan March 2, 2017.

157. * "Polymer Membranes for Large-Scale Energy Conversion and Storage," Invited talk at Advances in Polymers for Fuel Cells, Energy Storage, and Conversion, an ACS Polymer Chemistry Division workshop, Asilomar, CA, Feb. 26th, 2017.

156. * "Polymer Membranes for Large-Scale Energy Conversion and Storage," Invited lecture at Dalian University of Technology, Department of Chemical Engineering, Dalian, China December 12, 2016.

155. * "Designing Ion Exchange Membranes for New Energy and Clean Water Processes," Invited lecture at Tsinghua University, Department of Environmental Science, Beijing, China December 9, 2016.

154. * "Crosslinked Anion Exchange Membranes," Invited talk at Beijing Forum 2016 on Electrochemical Frontier, Wuhan University, Wuhan, China December 7, 2016.

153. * "New Designs for Anion Conducting Membranes," Keynote talk 2016 AIChE Annual Meeting, Session on Membrane and Direct Methanol Fuel Cells, San Francisco, CA November 14, 2016.

152. * "Polymer Membranes for Large-Scale Green Energy and Clean Water Technologies," DeNora N.A. Research Symposium, Cleveland, OH November 10, 2016.

151. * "Polymer Membranes for Large-Scale Energy Conversion and Storage," Invited lecture at Drexel University, Department of Materials Science and Engineering, Philadelphia, PA October 26, 2016.

150. * "Membranes and Water," Invited lecture at The Millennium Cafe, Materials Research Institute, University Park, PA October 11, 2016.

149. * "3D Printing of Micro-patterned Anion Exchange Membranes," Invited lecture at The Pennsylvania State University, Department of Engineering Science and Mechanics, University Park, PA September 14, 2016.

148. * "Ion-Conducting Polymers for Green Energy and Clean Water Applications," Invited lecture at The Pennsylvania State University, Department of Materials Science and Engineering, University Park, PA September 15, 2016.

147. * "Composition and Alignment in Layer-by-layer Polyamide Thin Films," Invited talk at 252nd American Chemical Society Fall 2016 National Meeting & Exposition, Polymer Science at the Interface of Industry, Government & Academics Session, Philadelphia, PA August 24, 2016.

146. "3D Printing of Micro-patterned Anion Exchange Membranes," Invited talk at 252nd American Chemical Society Fall 2016 National Meeting & Exposition, Polymers Designed for 3D Printing Applications: Evaluation of the Fundamental & Applied Aspects of the Field Session, Philadelphia, PA August 22, 2016.

145. "Crosslinked Anion Exchange Membranes with Complex Structures," International Symposium on Polymer Electrolytes, ISPE-15, Uppsala, Sweden August 15-19, 2016.

144. * "Nanostructured Anion Exchange Membranes," Invited talk at MRS 2016 Spring Meeting & Exhibit, Phoenix, AZ March 28-April 1, 2016.

143. * "Polymer Membranes for Large-Scale Energy Conversion and Storage," Invited lecture at Arizona State University, School for Engineering of Matter, Transport and Energy, October 15th, 2015.

142. * "New Polymer Structures for Anion Exchange Membranes," Invited talk presented at the 228th Meeting of the Electrochemical Society, Phoenix, AZ, October 14th, 2015.

141. * "Synthesis of Cationic Polymers for Membrane Applications," Invited talk at Center for Nanophase Materials Sciences User Meeting, Oak Ridge, TN, Sept. 2nd, 2015.

140. * "Polymer Membranes for Large-Scale Energy Conversion and Storage," Invited lecture at Ohio University, Department of Chemical and Biomolecular Engineering, Athens, OH, Aug. 31st, 2015.

139. * "Ion Transport in Functionalized Polymers," Invited talk at Center for Nanophase Materials Sciences, Oak Ridge, TN, May 14th, 2015.

138. * "Polymers in Additive Manufacturing - Materials and Processes," Invited seminar at Center for Innovative Materials Processing by Direct Deposition (CIMP-3D), The Pennsylvania State University, Mar. 3rd, 2015.

137. * "Anion Exchange Membranes for Energy Applications," Invited talk at Advances in Polymers for Fuel Cells and Energy Devices, an ACS Polymer Chemistry Division workshop, Asilomar, CA, Feb. 9th, 2015.

136. * "Anion Exchange Membranes for Energy Applications," Invited talk at 3rd US-Mexico Symposium on Advances in Polymer Science – MACROMEX 2014, Nuevo Vallarta, Mexico, December 6, 2014.

135. * "Anion Exchange Membranes for Energy Applications," Invited lecture at Yamanashi University, Fuel Cell Nanomaterials Center, Kofu, Japan, November 10, 2014.

134. * "Polymer Membranes for Large-Scale Energy Conversion and Storage," Invited lecture at Boston University, Department of Materials Science and Engineering, Boston, MA, November 7, 2014.

133. * "Acidity and Morphology in Proton-Conducting Membranes," Invited lecture at Carnegie Mellon University, Department of Chemical Engineering, Pittsburgh, PA, October 28, 2014.

132. * "Anion Exchange Membranes for Ammonium Bicarbonate-based Reverse Electrodialysis," Invited lecture at Clemson University, Department of Chemical Engineering, Clemson, SC, October 9, 2014.

131. * "Anion Exchange Membranes for Ammonium Bicarbonate-based Reverse Electrodialysis," Invited lecture at Hanyang University, Department of Energy Engineering, Seoul, South Korea, September 17, 2014.

130. * "Headgroup Acidity Effects in Proton Exchange Membrane Performance," Keynote speech Solid State Protonic Conductors – 17 (SSPC-17), Korea Institute of Science and Technology (KIST), Seoul, South Korea, September 16, 2014.

129. "Acidic Polymers and Basic Polymers: Materials Synthesis and Mechanistic Analysis," MATSE 590 seminar at Penn State University, Department of Materials Science and Engineering, University Park, PA, September 11, 2014.

128. * "Water Hydrogen Bonding in Functionalized Membranes," Invited talk at 248th American Chemical Society Fall 2014 National Meeting & Exposition, Transport in Polymer Membranes Session, San Francisco, CA August 13, 2014.

127. * "Hydration, Conductivity, and Stability of Anion Exchange Membranes," Invited lecture at the Gordon Research Conference on Fuel Cells, Smithfield, RI, August 6, 2014.

126. * "Membranes for Ammonium Bicarbonate-based Reverse Electrodialysis," Keynote lecture at the International Conference on Membranes (ICOM) 2014, Suzhou, China, July 24, 2014.

125. * "Polycondensation for High Performance Fuel Cells," Invited lecture at the American Chemical Society Polymer Chemistry Division Workshop - From Anionic Polymerization to Aerospace Materials to Membranes, Cetraro, Italy, June 30, 2014.

124. * "Designing Ion Exchange (Polymers and) Membranes for New Energy Processes," Invited lecture at the North American regional meeting of the International Society for Electrochemistry and Microbiology (ISMET), The Pennsylvania State University, University Park, PA, May 15, 2014.

123. * "Ion-Containing Polymers for New Energy and Clean Water," Keynote lecture at The 16th Israel Materials Engineering Conference (IMEC16), Technion – Israel Institute of Technology, Haifa, Israel, February 24-25, 2014.

122. * "Anion Exchange Membranes – Fundamental Polymer Properties and Performance in Pure Water Systems," Invited lecture at Daihatsu Motor Company, Ryuo, Shiga Prefecture, Japan, December 18th, 2013.

121. * "Superacid Aromatic Membranes and Thin Ionomer Films," Invited lecture at Nissan Motor Company Automotive Research Center, Yokosuka, Japan, December 16th, 2013.

120. * "Underlying Factors Governing Membrane Resistance and Permselectivity," Invited lecture at Francqui Symposium: Recent Advances in Microbial and Enzymatic Electrocatalysis, Ghent University, Ghent, Belgium, Nov. 22, 2013.

119. * "Stability of Anion Exchange Membranes," Invited lecture at 7th Santa Fe Workshop on Materials for Energy Conversion, Alkaline Membrane Fuel Cells, Bishop's Lodge, NM, November 4-5, 2013.

118. * "Cationic Polymers for Anion Exchange Membranes," Invited lecture at Rensselaer Polytechnic Institute, Department of Chemistry, Troy, NY, October 22nd, 2013.

117. * "Ion Exchange Membranes for New Energy and Clean Water," Plenary Lecture, The Pennsylvania State University, Materials Day 2013 – Converging on Materials, October 16, 2013.

116. * "Water Binding Interactions in Superacid Proton Exchange Membranes," Invited lecture at Norwegian University of Science and Technology (NTNU), PEM 2013 International Workshop, Trondheim, Norway, October 3-4, 2013.

115. * "Ion Mobility in Anion Exchange Membranes," Invited lecture at University of Surrey, Anion-Exchange Membranes for Energy Generation Technologies Workshop, Guildford, England, July 25, 2013.

114. * "Ion-Containing Polymers in Energy and Water Applications," Invited lecture at University of Massachusetts Amherst, Polymer Science and Engineering Department, Amherst, MA, May 23, 2013.

113. "Effects of Membrane Thickness on the Performance of Vanadium Redox Flow Batteries," Contributed talk presented at the 223rd Meeting of the Electrochemical Society, Toronto, CA, May 14th, 2013.

112. "Anion Exchange Membranes for Vanadium Redox Flow Batteries," Contributed talk presented at the 223rd Meeting of the Electrochemical Society, Toronto, CA, May 14th, 2013.

111. * "Designing New Ionic Polymers for Electrochemical Applications," Invited lecture at Wuhan University, Department of Chemistry, Wuhan, China, May 23, 2013.

110. * "Anion Exchange Membranes for Energy Applications," Invited lecture at Sun Yat-sen University, Department of Chemical Engineering, Guangzhou, China, March 19, 2013.

109. * "Using Infrared Spectroscopy to Learn about Water Treatment Membranes," Invited talk at Advances in Materials and Processes for Polymeric Membrane Mediated Water Purification, an ACS POLY Division workshop, Pacific Grove, CA, Feb. 25, 2013.

108. * "Anion Exchange Membranes," Advances in Materials for Proton Exchange Membrane Fuel Cell Systems, an ACS POLY Division workshop, Pacific Grove, CA, Feb. 20, 2013.

107. * "Cationic Polymers for Platinum-Free Fuel Cells," Invited lecture at IPC 2012, The 9th SPSJ International Polymer Conference, Kobe, Japan, December 13, 2012.

106. * "Thin Ion-Containing Polymer Films," Invited lecture at Texas A&M University, Materials Science and Engineering Program, College Station, TX, October 26, 2012.

105. * "Side Chain Functionalized Aromatic Polymers," Invited talk at 244th American Chemical Society Fall 2012 National Meeting & Exposition, Journal of Polymer Science Award: Symposium in Honor of Christopher Bielawski, Philadelphia, PA August 20, 2012.

104. * "Tuning Polymer Nanophase Morphology for Higher Performance in Vanadium Redox Flow Batteries," Invited talk at 244th American Chemical Society Fall 2012 National Meeting & Exposition, WCU International Symposium on Energy Storage and Conversion, Philadelphia, PA August 20, 2012.

103. * "Polymer membranes for new batteries and fuel cells," Invited talk at 244th American Chemical Society Fall 2012 National Meeting & Exposition, Polymer Science of Everyday Things, Philadelphia, PA August 19, 2012.

102. * "New Polymers for Electrochemical Energy Conversion and Storage," Invited lecture at Penn State-University of Freiburg Symposium on Energy Conversion, Freiburg University, Freiburg, Germany, July 13, 2012.

101. * "Using Lessons of Fuel Cell Membranes to Design Polymers for Energy Storage Applications," Green Energy Conversion Science and Technology, University of Yamanashi, Kofu Japan, August 1, 2012.

100. * "Water-polymer interactions in cation and anion conducting membranes," Invited lecture at Macro 2012 - IUPAC World Polymer Congress, Blacksburg, VA, June 25th, 2012.

99. * "Water Dynamics in Thin Polymer Films," Invited lecture at Dow Water Solutions, Edina, MN, June 19, 2012.

98. * "Designing New Ionic Polymers for Electrochemical Applications," Invited lecture at Technion – Israel Institute of Technology, Department of Materials Science and Engineering, Haifa, Israel, June 7, 2012.

97. * "New Polymer Membranes for Redox Flow Batteries and Fuel Cells," Invited lecture at University of Rochester, Rochester Advanced Materials Program Nanomaterials 2012, Rochester, NY, May 21, 2012.

96. * "Ion and Water Motion in Self-Assembled Polymers," Invited lecture at Carnegie Mellon University, Department of Chemistry, Pittsburgh, PA, April 20, 2012.

95. * "Electrostatically Assembled Mixed Charge Multilayers for Antifouling Applications," Invited lecture at Dow Chemical Company for the Dow Discussion Group on Interfacial Science, Midland, MI, April 11, 2012.

94. * "Ion and Water Motion in Self-Assembled Polymers," Introductory Speaker for the Taylor Lecture, Department of Materials Science and Engineering, University Park, PA, April 5, 2012.

93. * "Synthesis and Degradation of Anion Exchange Membranes," Invited talk at 243rd American Chemical Society Spring 2012 National Meeting & Exposition, Materials and Catalysis in Fuel Cells, San Diego, CA March 27th, 2012.

92. * "Aromatic Ion-Conducting Membranes," Invited lecture at WL Gore & Associates, Newark, DE, March 6, 2012.

91. * "Thin Ion-Containing Polymer Films," Invited lecture at National Institute of Standards and Technology, Boulder, CO, Feb. 10, 2012.

90. * "New Polymers for Water Treatment and Energy Storage," Invited lecture at King Abdulla University of Science and Technology (KAUST), Saudi Arabia, Jan. 22, 2012.

89. * "Polymer Assemblies for Ion Transport and Anti-fouling Surfaces," Invited lecture at Penn State University, Department of Civil and Environmental Engineering, University Park, PA, Jan. 18, 2012.

88. * "Water in Ion-Containing Polymer Membranes," Invited lecture at Penn State University, Department of Chemical Engineering, University Park, PA, Jan. 12, 2012.

87. * "Ion-Conducting Polymers for Electrochemical Applications," Invited lecture at Queen's University, Department of Chemical Engineering, Kingston, ON Canada, Nov. 17, 2011.

86. * "Water in Ion-Containing Polymers," Invited lecture at University of Akron, Department of Polymer Engineering, Akron, OH, Oct. 21, 2011.

85. * "Block Copolymers for Fast Ion Transport," Invited lecture at Michigan Technological University, Department of Chemistry, Houghton, MI, Oct. 14, 2011.

84. * "Block Copolymers for Fast Ion Transport," Invited lecture at Case Western Reserve University, Department of Macromolecular Science and Engineering, Cleveland, OH, Sept. 30, 2011.

83. * "Surface charge and molecular adsorption on poly(ethylene oxide)-containing multilayer assemblies," Invited talk at 242nd American Chemical Society Fall 2011 National Meeting & Exposition, Polyelectrolyte Complexes and Multilayers, Denver, CO Sept. 1st, 2011.

82. * "Structure property relationships of anion exchange membranes," Invited talk at 242nd American Chemical Society Fall 2011 National Meeting & Exposition, Fuel Cells Chemistry and Operation, Denver, CO Aug. 29th, 2011.

81. * "Block Copolymers as Ion Transport Membranes," Invited lecture at Clark University, Department of Chemistry, Worchester, MA, April 6, 2011.

80. * "Ionic nanopores as ion and water transport pathways in polymer membranes," Invited talk at American Chemical Society Spring 2011 National Meeting & Exposition, Aerogels, Foams, and other Nanoporous Materials, Anaheim, CA, March 29th, 2011.

79. * "Designing selective membranes for energy storage applications," Invited talk at American Chemical Society Spring 2011 National Meeting & Exposition, Polymers for Energy Storage and Delivery, Anaheim, CA, March 29th, 2011.

78. * "Surface Charge and Fouling of Ion-Containing Nanofiltration Membranes and Coatings," Invited talk at Advances in Materials and Processes for Polymeric Membrane Mediated Water Purification, an ACS POLY Division workshop, Pacific Grove, CA, Feb. 28, 2011.

77. * "Block Copolymers as Ion Transport Membranes," Invited lecture at Colorado School of Mines, Department of Chemistry, Golden, CO, Feb. 25, 2011.

76. * "Ion-Conducting Polymers for Electrochemical Applications," Invited talk at Golden Gate Polymer Forum, Mountain View, CA, Feb. 23, 2011.

75. * "Block Copolymers for Ion-Conducting Membranes," Advances in Materials for Proton Exchange Membrane Fuel Cell Systems, an ACS POLY Division workshop, Pacific Grove, CA, Feb. 22, 2011.

74. * "Hydration and Nanostructure in Ion-Containing Polymers," Invited lecture at University of Nevada Las Vegas, Department of Chemistry, Las Vegas, NV, Oct 13th, 2010.

73. * "Mechanisms of Morphology and Water Motion in Proton Exchange Membranes," Plenary lecture at 218th Meeting of the Electrochemical Society Meeting, Las Vegas, NV, Oct 11th, 2010.

72. * "Liquid-Like Conductivity in a Solid Polymer: Features of Fast Ion Conduction," Invited lecture at Pennsylvania State University, Department of Chemistry – Analytical Division, State College, PA, September 29th, 2010.

71. "Ion and Water Motion in Anion Exchange Membranes," Contributed talk presented at Progress MEA 2010 - CARISMA meeting, La Grande Motte, France, Sept. 13th, 2010.

70. * "Designing Polymers for Fast Ion Transport," Invited lecture at University of Wisconsin Madison, Department of Materials Science and Engineering, Madison, WI, September 16th, 2010.

69. * "Poly(thiophene)/Carbon Nanotube Composites for Solar Cells," Invited lecture at the Center for Nanophase Materials Sciences, Oak Ridge National Laboratory, Users Week, September 14th, 2010.

68. "Anion and Water Mobility in Poly(sulfone) Anion Exchange Membranes," Contributed talk at the 12th International Symposium on Polymer Electrolytes, Padova, Italy, Aug. 31st, 2010.

67. * "Nanostructured Polymeric Membranes for Fuel Cell and Water Treatment Applications," Invited lecture at ACS Fall National Meeting, WCU International Symposium on Energy Storage and Conversion, Boston, MA, August 22nd, 2010.

66. * "The Role of Water in Proton Exchange Membranes," Invited lecture at 1st International Summer Seminar for Young Scientists, Lake Kawaguchiko, Japan, Aug. 19th, 2010.

65. * "Ion-Conducting Membranes for Electrochemical Applications," Invited lecture at Pacific Northwest National Laboratory, Richland, WA, Aug. 16th, 2010.

64. * "Poly(thiophene)-Carbon Nanotube Composites for Solar Cells," Invited lecture at Illinois Institute of Technology, Department of Chemical Engineering, Chicago, IL, April 21st, 2010.

63. * "Poly(thiophene)-Carbon Nanotube Composites for Solar Cells," Invited talk at Polymer Nanocomposites 2010, Lehigh University, Bethlehem, PA, March 9th, 2010.

62. * "Polymer-Water Interactions and Transport Properties in Fuel Cell and Reverse Osmosis Membranes," Invited lecture at Drexel University, Department of Chemical Engineering, Philadelphia, PA, Jan. 15th, 2010.

61. * "Polymers, Water, and Ions: Interesting Observations on Morphology, Diffusion, and Conductivity," Invited talk at the National Institute of Standards and Technology, Gaithersburg, MD, Jan. 14th, 2010.

60. * "Interactions Between Ion-containing Polymers and Water - Applications Towards Water Treatment Membranes and Antifouling Surfaces," Invited talk at the Naval Research Lab, Washington, DC, Jan. 12th, 2010.

59. * "Ion-Containing Polymers and Their Interactions with Water," Invited lecture at Rochester Institute of Technology, Department of Chemistry, Rochester, NY, Jan. 5th, 2010.

58. "Morphology Control in Mid-block Sulfonated Triblock Copolymers," Contributed talk at MRS Fall Meeting, Boston, Nov. 30th 2009.

57. * "Well-controlled Block Copolymer Architectures for Ion-conducting Membranes," Invited talk at LANL-NEDO-AIST workshop, Palm Springs, CA, Nov. 19th, 2009.

56. * "Thiophene Polymerization and Polythiophene-Carbon Nanotube Composites for Solar Cells," Invited talk at Waseda University, Department of Chemistry, Tokyo, Japan August 22nd, 2009.

55. * "Anion Exchange Membranes for Electrochemical Applications," Invited talk at Polymer Batteries and Fuel Cells 2009, Yokohama, Japan, Aug. 6th, 2009.

54. * "Proton and Anion Exchange Membranes for Electrochemical Applications: Nanophase Structure and Ion-Transport," Invited talk at Waseda University, Department of Chemistry, Tokyo, Japan August 5th, 2009.

53. * "Structured Poly(thiophene)/Carbon Nanotube Thin Films for Organic Photovoltaic Applications," Invited lecture at Virginia Tech Polymer Alumni Symposium, Blacksburg, VA July 17th, 2009.

52. * "Morphology and Transport Properties of Anion and Cation Exchange Membranes," Invited lecture at 3M Corporation Tech Forum for Polymers and Energy, St. Paul, MN, June 16th, 2009.

51. * "Ion-Containing Polymers and Their Application Towards Water Treatment," Invited lecture at Dow Water Solutions, Edina, MN, June 15th, 2009.

50. * "Synthesis, Structure, and Properties of Ion-Containing Polymers," Invited lecture at WL Gore & Associates, Newark, DE, May 13th, 2009.

49. * "Morphology and Transport Properties of Ion-Containing Polymers," Invited lecture at the Army Research Lab, Aberdeen Proving Grounds, MD, April 21st, 2009.

48. * "Transport Properties of Proton Exchange Membrane Nanocomposites," Invited talk at American Chemical Society Spring 2009 National Meeting & Exposition, Functional Polymer Nanocomposites for Energy Storage and Conversion, Salt Lake City, UT, March 23rd, 2009.

47. "Efficient Synthesis and Properties of Anion Exchange Membranes," Contributed talk at American Chemical Society Spring 2009 National Meeting & Exposition, Ion-containing Polymers for New Technologies, Salt Lake City, UT, March 22nd, 2009.

46. * "Ion-Containing Polymers: Cutting-Edge Energy Applications Enabled by Insights into Chemistry, Morphology, and Transport Properties," Invited talk at the joint meeting of the Polymers and Power/Energy panels of the Materials group of the Technical Cooperation Program (TTCP), Victoria, BC, March 10th, 2009.

45. * "Nanostructured Polymers: Using Chemistry and Morphology to Tune Transport Properties ," Invited lecture at Oak Ridge National Laboratory, Center for Nanophase Materials Sciences, Oak Ridge, TN, March 4th, 2009.

44. * "Cation and Anion Transport in Functionalized Polymers," Invited lecture at University of Tennessee, Knoxville, Department of Chemical & Bimolecular Engineering, Knoxville, TN, March 3rd, 2009.

43. * "Flux and Rejection in Ion-containing and Surface-modified Polymer Membranes," Invited talk at Advances in Materials and Processes for Polymeric Membrane Mediated Water Purification, an ACS Polymer Chemistry Division workshop, Asilomar, CA, Feb. 23rd, 2009.

42. * "Water Binding and Transport in Anionic and Cationic Membranes," Invited talk at Advances in Materials for Proton Exchange Membrane Fuel Cell Systems, an ACS Polymer Chemistry Division workshop, Asilomar, CA, Feb. 16th, 2009.

41. * "Functional Materials for Fuel Cells," Invited lecture for ASM Local Chapter, University Park, PA, Jan. 20th, 2009.

40. "Water uptake characteristics and backbone flexibility of novel polymers for proton exchange membranes," Contributed talk presented at the Electrochemical Society Fall Meeting, Honolulu, HI, Oct. 15th, 2008.

39. "Water Uptake and Transport in Flexible Proton Exchange Membrane Networks," Contributed talk presented at Progress MEA 2008 - CARISMA meeting, La Grande Motte, France, Sept. 22nd, 2008.

38. * "Functionalized Polymers for Fuel Cells," Invited lecture at The Pennsylvania University, Department of Engineering Science and Mechanics, University Park, PA, Sept. 17th, 2008.

37. * "Cation and Anion Transport in Fuel Cell Membranes," Invited lecture at University of Connecticut, Polymer Program, Storrs, CT, Sept. 12th, 2008.

36. "Bulk Heterojunction Morphology Control by Electro-deposition of Polythiophene," Physical Chemistry of Interfaces and Nanomaterials VII, SPIE NanoScience + Engineering, San Diego, CA, Aug. 11th, 2008.

35. * "Cation and Anion Transport in Functionalized Polymers," Invited lecture at University of Yamanashi, Clean Energy Research Center, Kofu, Japan, July 7th, 2008.

34. * "Polymers with Tethered Anionic and Cationic Groups as Membranes for Fuel Cells," Invited lecture at Macro 2008, 42nd IUPAC World Polymer Congress, Taipei, Taiwan, July 1st, 2008.

33. * "Ion Transport Membranes," Invited lecture at Virginia Tech, Macromolecules and Interfaces Institute, Blacksburg, VA, April 23rd, 2008.

32. * "Fuel Cells," Materials Day Tutorial, The Pennsylvania State University, University Park, PA, April 14th, 2008.

31. * "Polymers for Fuel Cells," American Chemical Society Spring 2008 National Meeting & Exposition, ACS Award in Polymer Chemistry: Symposium in Honor of James McGrath, New Orleans, LA, April 8th, 2008.

30. * "Membranes for Acidic and Basic Fuel Cells: Examples, Limits, and Directions," NRC Institute for Fuel Cell Innovation, US-Canada Fuel Cell Workshop, Vancouver, BC, Canada, March 16th, 2008.

29. * "Morphology and Transport in Ion-containing Polymers," Invited lecture at University of Illinois at Urbana-Champaign, NSF STC WaterCAMPWS, Champaign, IL, March 7th, 2008.

28. * "Cation and Anion Transport in Functionalized Polymers," Invited lecture at Colorado School of Mines, Department of Chemical Engineering, Golden, CO, Jan. 18th, 2008.

27. * "Functional Polymers: Transport and Nanophase Morphology for Fuel Cell Applications," Invited lecture for Materials Advantage, University Park, PA, Sept. 10th, 2007.

26. * "Neutron Imaging of Liquid Water in Fuel Cells," Invited talk at the Gordon Research Conference – Fuel Cells, Smithfield, RI, July 22-27, 2007.

25. * "Neutron Imaging of Liquid Water Transport in Proton Exchange Membrane Fuel Cells: Heat Transfer and Fluid Dynamics," Invited lecture at Michigan Technological University, Department of Mechanical Engineering, Houghton, MI, Nov. 30th, 2006.

24. * "Neutron Imaging Studies of Liquid Water Transport in PEM Fuel Cells," Invited lecture presented to the San Francisco Local Section of the Electrochemical Society, Berkeley, CA, Nov. 20, 2006.

23. Hickner, M., N. Siegel, K. Chen, D. Hussey, D. Jacobson, M. Arif, "Neutron Imaging Studies of Water and Heat Transport in PEM Fuel Cells," Contributed talk presented at the Fuel Cell Seminar & Exhibition, Honolulu, HI, Nov. 13–17, 2006.

22. Hickner, M., N. P. Siegel, K. Chen, D. Hussey, D. Jacobson, M. Arif, "Exploring Liquid Water Distribution and Local Heating Effects in an Operating PEM Fuel Cell," Contributed talk at the World conference on neutron radiography, National Institute of Standards and Technology Gaithersburg, MD, Oct. 16-19, 2006.

21. * Hickner, M., C. J. Cornelius, M. R. Hibbs, C. H. Fujimoto1, T. M. Alam, "Water Binding and Transport in Polymer Membranes with High Ion Content," Invited talk presented at the 232nd ACS National Meeting, San Francisco, CA, Sept. 10-14 2006.

20. Hickner, M., K. Chen, N. Siegel, D. McBrayer, "Water and Heat Transport in PEM Fuel Cells," Poster presented at The Gordon Research Conference - Fuel Cells, Smithfield, RI, July 23-28, 2006.

19. Hickner, M. C. J. Cornelius, M. R. Hibbs, C. H. Fujimoto, T. M. Alam, "The Nature of Water and Transport in Functionalized Poly(phenylene)s," Contributed talk at the MRS 2006 Spring Meeting, San Francisco, CA, April 17 - 21, 2006.

18. * "Novel Polymeric Membranes for Fuel Cells," Invited lecture at the University of Texas at Austin, Department of Chemical Engineering, Austin, TX, Oct. 27th, 2005.

17. * Hickner, M., K. Chen, "PEM Fuel Cell Water Management," Invited lecture presented at the National Research Council of Canada's Institute for Fuel Cell Innovation, Vancouver, BC, Aug. 1st, 2005.

16. Hickner, M., K. Chen, N. Siegel, D. McBrayer, "Key Phenomena in PEM Fuel Cells Liquid Water Transport," Poster presented at the Gordon Research Conference – Fuel Cells, Smithfield, RI, July 17-22, 2005.

15. Hickner, M., K. Chen, N. Siegel, D. McBrayer, "Key Phenomena in PEM Fuel Cells Liquid Water Transport," Contributed talk presented at the 2nd International Conference on Polymer Batteries and Fuel Cells Las Vegas, NV, June 13-17, 2005.

14. * "Elucidating the Key Phenomena of Water Transport in Proton Exchange Membrane Fuel Cells," Invited lecture at the New Mexico State University, Department of Chemical Engineering, Las Cruces, NM, Feb. 17th, 2005.

13. * "Polymer electrolytes for fuel cell applications," Invited lecture at Highlands University, Department of Chemistry, Las Vegas, NM, Nov. 5th, 2004.

12. Hickner, M., K. Grossarth, K. S. Chen, D. R. Noble, "Liquid water droplet instability and removal at the GDL/Gas flow channel interface," Poster presented at The Gordon Research Conference - Fuel Cells, Bristol, RI, July 25-30, 2004.

11. Hickner, M., J. E. McGrath, "The Role of Inorganic Additives in Determining Transport Properties of Organic-Inorganic Composite Proton Exchange Membranes," Contributed talk at the 203rd Meeting of The Electrochemical Society, Paris, France, April 27-May 2, 2003.

10. Hickner, M., B. Pivovar, F. Wang, T. Zawodzinski, J. E. McGrath, "Transport of methanol and protons in proton exchange membranes," Contributed talk at the 201st Meeting of The Electrochemical Society, Philadelphia, PA, May 12-17, 2002.

9. "Fuel cell research at Virginia Tech: A student's perspective," Contributed talk at the ACS 2002 Spring National Meeting, Orlando, FL, April 7-11, 2002.

8. Hickner, M., F. Wang, Y. S. Kim, B. Pivovar, T. Zawodzinski, J. E. McGrath, "Influencing the transport of water, methanol, and protons through a fuel cell ion exchange membrane," Contributed talk at the AIChE Spring National Meeting, New Orleans, LA, March 10-14, 2002.

7. Hickner, M., F. Wang, Y. Kim, B. Pivovar, T. Zawodzinski, J. E. McGrath, "Development of thin-film fuel cell electrodes containing novel polymers," Contributed talk at the 200th Meeting of The Electrochemical Society, San Francisco, CA, Sept. 2-7, 2001.

6. Hickner, M., F. Wang, Y. Kim, J. E. and McGrath, "Chemistry-morphology-property relationships of novel proton exchange membranes," Contributed talk at the 200th Meeting of The Electrochemical Society, San Francisco, CA, Sept. 2-7, 2001.

5. Hickner, M., F. Wang, Y. Kim, T. Zawodzinski, J.E. McGrath, "Chemistry-morphology-property relationships of novel proton exchange membranes for direct methanol fuel cells," Contributed talk at the ACS 2001 Fall National Meeting, Chicago, IL, Aug. 26-30, 2001.

4. Hickner, M., F. Wang, H. Shohba, N. Gunduz, J. Mecham, J. E. McGrath, T. Zawodzinski, "New proton exchange membranes via direct step or polycondensation," Contributed talk at the 199th Meeting of The Electrochemical Society, Washington D. C., March 25-30, 2001.

3. Hickner, M., F. Wang, H. Shobha, N. Gunduz, J. B. Mecham, J. E. McGrath, "Synthesis of proton exchange membranes via direct step or polycondensation," Contributed talk at the AIChE 2000 Fall National Meeting, Los Angeles, CA, Nov. 12-17, 2000.

2. Hickner, M. A., M. Sankarpandian, T. Zawodzinski, J. E. McGrath, "Adhesion issues within PEM membrane electrode assemblies," Contributed talk at the AIChE 2000 Fall National Meeting, Los Angeles, CA, Nov. 12-17, 2000.

1. Hickner, M. A., A. Banthia, J. E. McGrath, "Synthesis and characterization of phosphine oxide diol modified epoxy adhesives," Contributed talk at the ACS 2000 Fall National Meeting, Washington, D.C., Aug. 20-25, 2000.

Scientific Collaborators (Last Five Years)

C. Bae (RPI), C.J. Cornelius (UNebraska), C.H. Fujimoto (Sandia), E. Gomez (Penn State), Y.A. Elabd (TAMU), M.R. Hibbs (Sandia), D.S. Hussey (NIST), I. Ivanov (ORNL), D.A. Jacobson (NIST), M. Janik (Penn State), S. Kim (PNNL), Y.S. Kim (LANL), J. Liu (PNNL), B.E. Logan (Penn State), J.L. Lutkenhaus (TAMU), M.K. Mahanthappa (U. Wisconsin, Madison), D. Pickel (ORNL), S. Paddison (UT-Knoxville), B.S. Pivovar (NREL), R. Schaak (Penn State), G. Tew (UMass), C.-Y. Wang (Penn State), D. Wang (Penn State), Q. Wang (Penn State), A.Z. Weber (LBNL), Z. Yang (PNNL)

Graduate Advisor **Principal Postdoctoral Sponsor**

James E. McGrath (Virginia Tech) (deceased) Ken S. Chen (Sandia National Laboratories)

Synergistic Activities

Teaching

I developed a new course at Penn State entitled "Materials in Energy Research" which focuses on the uses of advanced materials for the conversion and utilization of energy. Research topics in important fields such as photovoltaics, fuel cells, solar thermal energy, and CO_2 conversion are stressed with an emphasis on energy transfer at the molecular/nanoscale and state-of-the-art materials research. The class is discussion-driven and covers fundamental materials science, energy transfer processes at the molecular scale, thermodynamics of energy conversion, and economic and political issues that influence energy choices. This class has been adapted for both first year and senior students depending on the need.

I have also developed "Polymer Materials II". This is a lecture-based course, but covers modern research topics such as conducting polymers, ionic polymers, super-tough gels, and other relevant topics from the polymer science literature that the students will be exposed to in graduate school.

A new senate-approved course was developed in Fall 2016 – Polymers in 3D Printing as an elective in the Master's Program in Additive Manufacturing. The purpose of the class is to educate students at the intersection of polymer science and additive manufacturing. Polymers-focused students will what is unique about 3D printing processes as they relate to polymer science, and additive manufacturing specialists will get a deeper look into the polymer science of 3D printing and the macromolecular nature of polymeric materials as applied in additive manufacturing.

Outreach

I have worked towards developing exciting hands-on units for two week-long residential camps for secondary educators and high school students (drawn from around the Northeast and the country) on Penn State's University Park campus. These experimental activities focus on using the tools of chemistry and physical science to synthesize polymeric materials and explore their structure and function for water treatment and alternative energy applications. The student camp, which attracts 20-30 high school students annually, is sponsored by the ASM Materials Education Foundation and is designed to immerse students in exciting discovery-based learning and expose them to advanced scientific concepts. The teacher camp, sponsored by the Pennsylvania NASA Space Grant Consortium, gives approximately 20 high school teachers a chance to engage with college-level educators on new technical topics to both hone their own knowledge and develop new activities and modules to take back to their classrooms. The week is designed so that the teachers leave with information, materials, and demonstrations that can directly supplement their current courses.

Students and Researchers Currently Supervised

Graduate Students (8 current, 30 total)
Clara Cappirelli (Chem E)
Nayan Sakia (Chem E)
Raymond Lopez-Hallman (MATSE)
Richard Wiencek (Chemistry)
Preeya Kuray (MATSE)
Megan Matta (Chemistry)
Sarah Sheffield (Chemistry)
Harrison Cassady (Chem E)

Undergraduate Researchers (5 current, 42 total)
Hannah Pohlmann (MATSE), Schreyer thesis
Teague Williams (MATSE), Senior thesis
Lachlan Peeke (MATSE)
Kenneth Kimmons (MATSE)
Natalie Mamrol (MATSE)

Post-Doctoral Researchers (2 current, 18 total)
Jing Pan (PhD Wuhan University)

Tawanda Zimudzi (Chemistry)

Visiting Researchers and Staff (4 current, 11 total)
Matthias Park (postgraduate researcher)
Carlos Rolando Fernandez Pulido (postgraduate researcher)
Hafis Graha (Tokyo Tech)
Saima Shabbir (Institute of Space Technology, Islamabad, Pakistan)

Hickner Group Alumni

Graduate Students

- Karan Doss (MS MATSE, August 2018), currently a PhD candidate in MATSE.
- Yifan Deng (MS MATSE, August 2018), currently a researcher in the Hickner Group.
- Tawanda Zimudzi (PhD Chemistry, August 2016), currently a staff researcher in MCL, Penn State.
- Liang Zhu (PhD MATSE, March 2016), currently a staff scientist at Dioxide Materials.
- Sean Nunez (PhD MATSE, August 2015), currently a staff scientist at Arkema.
- Douglass Kushner (PhD MATSE, August 2016), currently a postdoc at Lawrence Berkeley National Laboratory.
- Harrison Cassady (MS Chemical Engineering, March 2015), currently an entrepreneur in Portland, OR.
- Jiho Seo (MS MATSE, February 2016), currently a PhD candidate with Ralph Colby at PSU MATSE.
- Caroline Christensen (MS Chemistry, November 2015), currently a lab supervisor at University of Delaware.
- Clara Capparelli (MS MATSE, July 2015), currently in Argentina with the Fulbright Commission.
- Sarah Black (PhD Chemistry, July 2015), currently a staff member at the Center for Naval Analyses.
- Brian Chaloux (PhD MATSE, August 2014), currently a National Research Counsel Postdoc at the Naval Research Lab.
- Changwoo Nam. Currently a PhD candidate at Penn State.
- David Jones (MS MATSE, August 2014), currently resides in Knoxville, TN.
- Lizhu Wang (PhD MATSE, December 2013), postdoc at University of Nebraska Medical Center. Currently a research scientist at Missouri University of Science and Technology.
- Melanie Disabb-Miller (PhD MATSE, December 2013), currently resides in Baltimore, MD.
- Stephanie Petrina (MS MATSE, April 2010, PhD MATSE August 2013), currently employed with Georgia Pacific.
- Zhaoyan Ai (MS candidate), currently a PhD candidate in PSU Chemistry.
- Romesh Patel (PhD MATSE, December 2011), Postdoc in the PV group at AFRL in Dayton, OH. Currently at Nike.
- Alfonso Mendoza (PhD MATSE, December 2012), currently an entrepreneur in San Francisco, CA.
- Xie He (PhD MATSE, December 2012), postdoc at Penn State. Currently resides in Boston, MA.
- Matthew Gross (MS MATSE, Aug 2010), currently MGL Consulting, Boulder, CO.
- Hunter Moore (MS MATSE, April 2011), currently Virginia Western Community College, Roanoke, VA.

Post-Doctoral Researchers

- Liang Zhu March 2016-December 2017 (Ph.D. Penn State), currently at Dioxide Materials.
- Chris Lyon March 2017-November 2017 (Ph.D. UNH), current at Vantage Chemicals.
- Sean Nunez September 2015-February 2017 (Ph.D. Penn State), currently at Arkema.
- Brandon Calitree November 2012 – March 2015 (Ph.D. University of Buffalo), currently at University of Delaware.
- Geoff Geise, September 2012 – June 2014, (Ph.D. University of Texas) currently faculty in Chemical Engineering at University of Virginia.
- Praveen Meduri January 2013 – May 2014, (Ph.D. University of Kentucky) – PSIEE Postdoctoral Fellow. Currently a professor at IIT India.
- Ian Sines, January 2012 – August 2013, (Ph.D. The Pennsylvania State University, joint with Manish Kumar, PSU CHE). Currently a research scientist at St. Gobain.
- Nanwen Li, February 2012 – December 2013, currently a postdoc at Georgia Tech.

- Shudipto Dishari, October 2010 – August 2013, currently a postdoc at Penn State University.
- Dongyang Chen, August 2011 – August 2013, currently a postdoc at Northwestern University.
- Min Zhang, August 2012-March 2013, currently a postdoc at National University of Singapore.
- Guang Chen, August 2011-March 2013, currently a postdoc at National University of Singapore.
- Youngjin Cho, Feb. 2011-Jul. 2012, currently a staff scientist at DGIST, Korea.
- Timothy B. Tighe, Oct. 2009-Dec. 2011, currently a staff scientist at Penn State Materials Characterization Laboratory.
- Tomonori Saito, June 2008-July2010, currently a staff member at Oak Ridge National Laboratory.
- Jingling Yan, Feb. 2008-Oct. 2010, currently a research associate at Changchun Institute of Applied Chemistry, Chinese Academy of Sciences, China.

Visiting Researchers and Staff

- Hideaki Ono, March 2015-October 2015, Graduate Researcher, Yamanashi University.
- Juanjuan Han, August 2015-June 2016, Graduate Researcher, Wuhan University.
- Fang Chen, December 2012-December 2013, Professor, Department of Applied Chemistry, School of Natural and Applied Science, Northwestern Polytechnic University, Xi'an, China.
- Bencai Lin, October 2015-March 2016, Professor, School of Materials Science and Engineering, Changzhou University, China.
- Masaki Koike, January 2009-June 2009, visiting graduate researcher, Yamanashi University.
- Shinya Kawamura, January 2009-June 2009, visiting graduate researcher, Yamanashi University.

Undergraduate Research Students

- Xuedi Yu (MATSE), research student and visiting researcher – currently employed at Aleo BME, Inc.
- Franky Bernal (REU student), finishing degree at Cal State LA.
- Jessi Purawic (MATSE), undergraduate researcher – currently a senior in MATSE.
- Robert Kaminsky (MATSE), undergraduate researcher – currently employed at Arkema.
- Emma Vetland (MATSE), senior thesis – currently employed at NASA.
- Lindsay Erndwine (MATSE), senior thesis – currently a graduate student at University of Delaware.
- Kaitlyn Eckert (Chem E), undergraduate researcher.
- Christopher Malencia (Chem E), Schreyer Honors Thesis.
- Will Ferrell (MATSE), senior thesis – graduate student at UT Knoxville.
- Nichole Baer (MATSE), currently at First Quality Enterprises.
- Ziyi (Kent) Miao (MATSE), Schreyer Honors Thesis, currently a graduate student at Northwestern University.
- Emily Cimino (MATSE), senior thesis – currently employed at PPG.
- Sumant Kalidindi (MATSE), undergraduate research in PSU MATSE.
- Victoria Christensen (MATSE), undergraduate in PSU MATSE.
- John Nese (MATS, senior thesis student), currently employed at AK Steel.
- Will Salem (BS PSU MATSE), currently employed at PPG.
- Rebecca Balaj (NSF Soft Materials REU), finishing degree at Columbia University.
- Christopher Rodriguez (NSF Soft Materials REU), finishing degree at Univ. Puerto Rico.
- Charles Michaelis (PSU CHE), currently at U. Virginia for graduate school.
- Kathleen Murzynski (PPG Fellow MATSE), finishing degree in PSU MATSE.
- Ying-Hsun "Mindy" Lin (MATSE), finishing degree in PSU MATSE.
- Jie "Jenny" Mou (MATSE), finishing degree in PSU MATSE.
- Andrew DeCarlo (PSU MATSE)
- Eric Fuemmeler (NSF Soft Materials REU, BS Chemistry Truman State University) currently graduate student at University of Illinois.
- Zach Johnson (NSF REU), finishing degree in PSU MATSE.
- Andrew Curtis (NSF Soft Materials REU, BS Chemistry Drake University).
- Rich Schatz (PSU Chemistry 2010).
- Kevin Dicker (BS PSU MATSE 2011, senior thesis student) currently a graduate student at UDEL MATSE.

- Julianne Carlson (BS PSU MATSE, senior thesis student).
- Colin Smith (BS PSU CHE) currently on coop with Medtronic.
- Tim Roberts (BS PSU CHE 2011) currently at Sunoco, Memphis TN.
- Matthew Menyo (BS PSU MATSE May 2009) currently a graduate student at UCSB, MATSE/BIO.
- Ernesto Martinez (NSF Soft Materials REU 2011) currently an undergraduate student at MIT.
- Rebecca Nolin (NSF Soft Materials REU, summer 2010) currently and undergraduate student at Virginia Tech.
- Kyle Bryson (BS PSU MATSE May 2010). PhD and NSF Graduate Fellowship recipient at UMASS-Amherst, PMSE. Currently employed at 3M Company.
- Chris Ewing (BS PSU CHE May 2010) currently graduate student at PITT, CHE.
- Patrick Mangiagli (BS PSU MATSE May 2010) currently a graduate student at Georgia Tech.
- Amy Beasten (NSF NNIN REU, summer 2008) CHE Tulane May 2009, currently a graduate student at North Carolina State University.
- Matthew Gross (BS PSU MATSE 2009, senior thesis student) currently at Ball Aerospace, Boulder CO.
- Kevin Donaher (NSF NNIN REU, summer 2009) currently an undergraduate student at Columbia University.
- Titi Shodiya (BS PSU MATSE May 2010). PhD Duke University. Currently a staff member at NIST.