US008275351B1

(12) **United States Patent**
Cazanas et al.

(10) **Patent No.: US 8,275,351 B1**
(45) **Date of Patent: Sep. 25, 2012**

(54) **SYSTEMS AND METHOD FOR AUTOMATING A RESPONSE FROM A MOBILE STATION**

(75) Inventors: **Carlos A. Cazanas**, Bethlehem, PA (US); **Brian Tims**, Nazareth, PA (US); **Azam Khan**, Franklin, NJ (US)

(73) Assignee: **Cellco Partnership**, Basking Ridge, NJ (US)

(*) Notice: Subject to any disclaimer, the term of this patent is extended or adjusted under 35 U.S.C. 154(b) by 120 days.

(21) Appl. No.: **12/787,997**

(22) Filed: **May 26, 2010**

(51) **Int. Cl.**
G06F 15/18 (2006.01)

(52) **U.S. Cl.** **455/404.1**; 455/466

(58) **Field of Classification Search** 455/404.1, 455/404.2, 412.1, 412.2, 413, 418, 419, 466
See application file for complete search history.

(56) **References Cited**

U.S. PATENT DOCUMENTS

5,946,630	A	8/1999	Willars et al.	
6,208,870	B1	3/2001	Lorello et al.	
6,263,212	B1	7/2001	Ross et al.	
6,640,115	B1 *	10/2003	Fujimoto et al.	455/567
7,181,217	B2	2/2007	Kalavade	
7,319,880	B2	1/2008	Sin	
2007/0202897	A1	8/2007	Smith	
2008/0268882	A1	10/2008	Moloney	
2008/0313288	A1	12/2008	Smith et al.	
2010/0151889	A1 *	6/2010	Chen et al.	455/466
2011/0093161	A1	4/2011	Zhou et al.	
2011/0117903	A1	5/2011	Bradley	

OTHER PUBLICATIONS

Complete file history of U.S. Appl. No. 10/024,922 filed Dec. 19, 2001—Method of Forwarding an SMS Messge in a Mobile Communication System.
WirelessMoves: SMS Forwarding, Accessed Mar. 11, 2009, 2 pages.
Maxis—Personal—Mobile Services—Message Plus, Accessed Mar. 11, 2009.
Maxis—Personal—Terms and Conditions, Accessed Mar. 11, 2009.
NewNet SMserver, Wireless Short Message Service Tutorial, ADC Telecommunications, 1999, 15 pages.
SMS Forwarder User Guide, Wireless Labs Technologies, 2006-2008, Accessed Mar. 11, 2009.
SMS Forwarder, Wireless Labs Technologies, Accessed Mar. 11, 2010.

* cited by examiner

Primary Examiner — Sam Bhattacharya

(57) **ABSTRACT**

Mobile stations, methods, functionality, and articles of manufactures enable mobile stations to automatically respond to a messaging service message. An application is stored and executed on a mobile station. The application provides functionality to determine response message content for use by the application, receive a mobile messaging service message, and respond automatically, without interaction by the end-user of the mobile station, send a response to the received mobile messaging service message containing the message content for the sender of the received mobile messaging service message. The automatic response application may be user activated or automatically activated under various circumstances, for example at a specific time, on a regularly scheduled basis, upon detection of movement faster than a predetermined speed, upon detection of the station being in a vehicle, e.g. associated with a recognizable device in the vehicle.

26 Claims, 4 Drawing Sheets

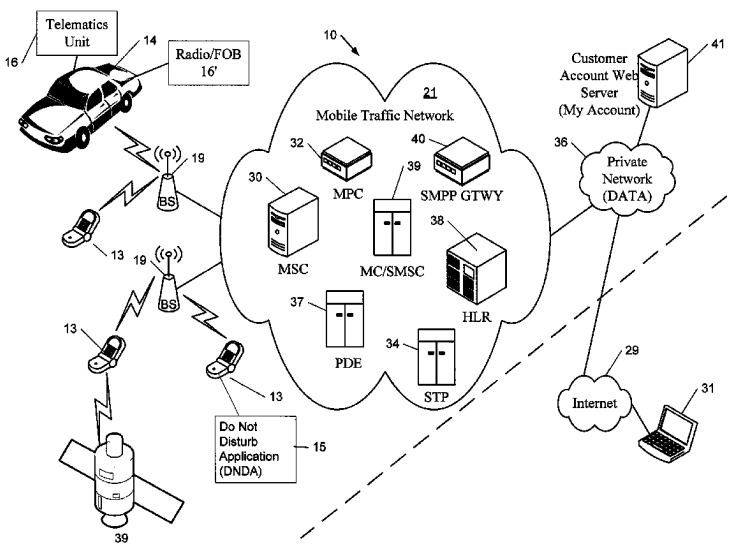

GOOGLE EXHIBIT 1004

FIG. 1

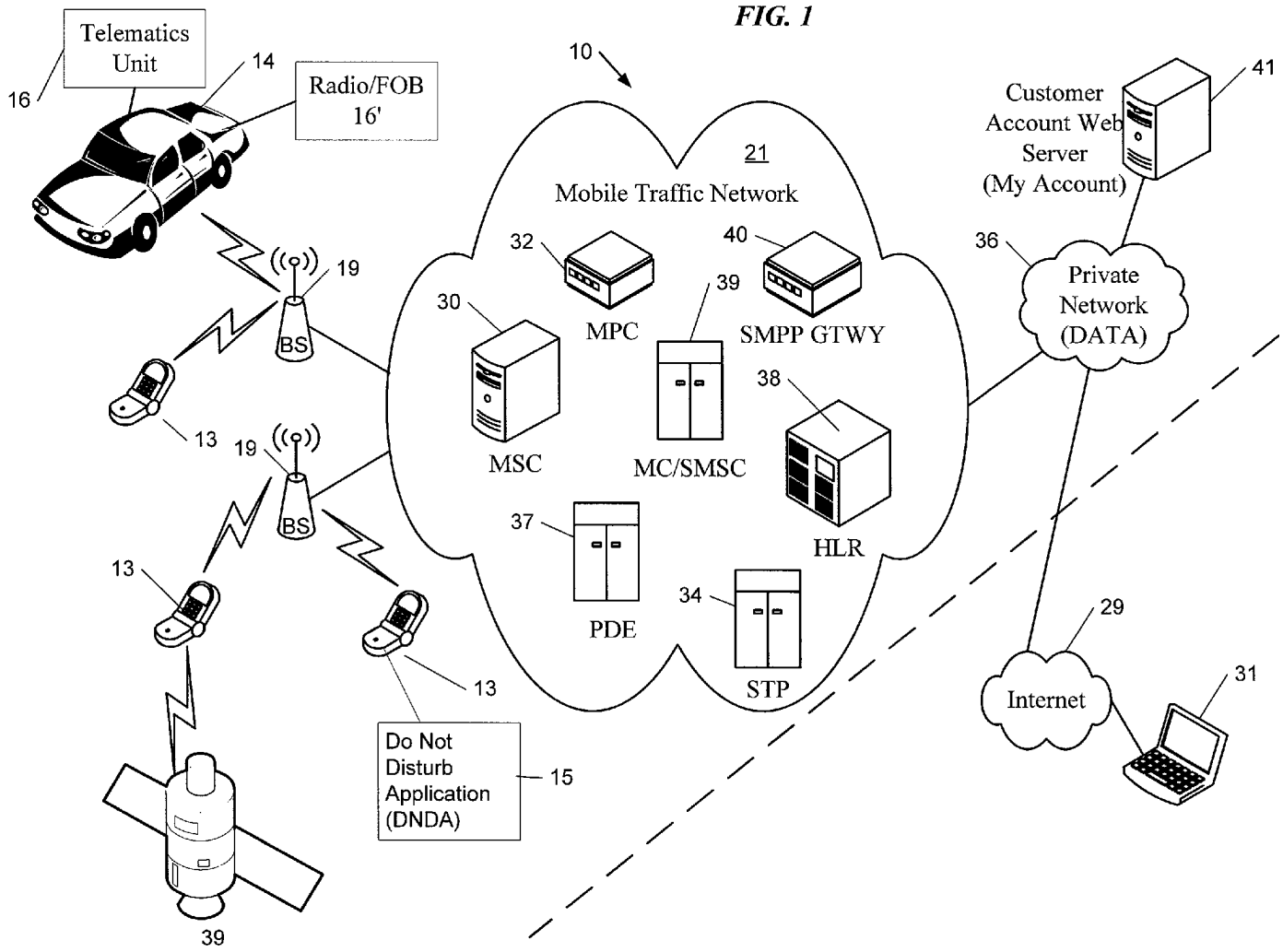
Telematics Unit
16
14
Radio/FOB 16'
10
21
Mobile Traffic Network
32
MPC
40
SMPP GTWY
39
30
MSC
MC/SMSC
38
HLR
37
PDE
34
STP
19
BS
13
Do Not Disturb Application (DNDA)
15
39
Customer Account Web Server (My Account)
41
36
Private Network (DATA)
29
Internet
31

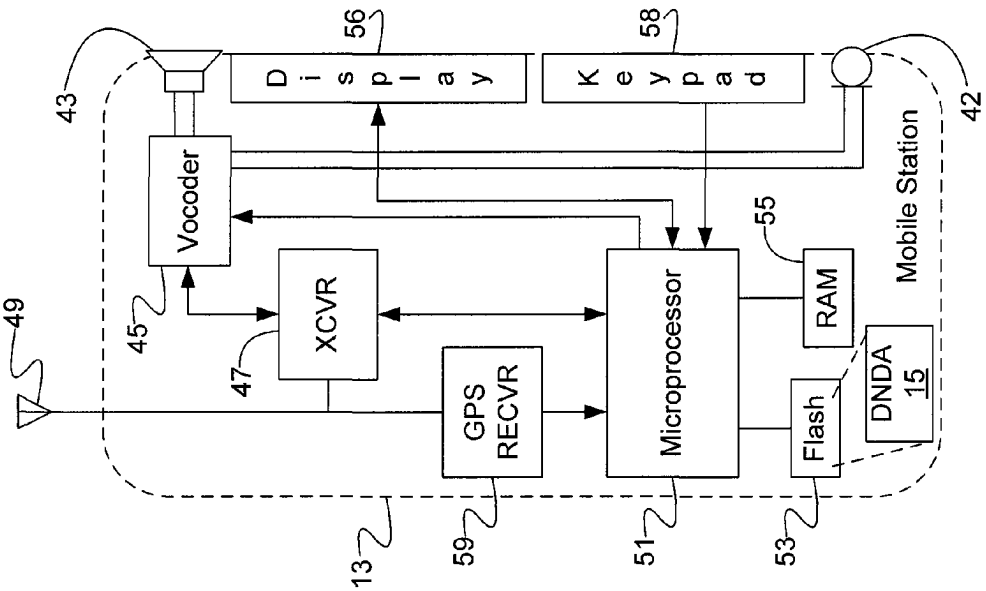
Display
Keypad
Vocoder
XCVR
GPS RECVR
Microprocessor
RAM
Flash
DNDA 15
Mobile Station
43
56
58
42
49
45
47
55
13
59
51
53

FIG. 2

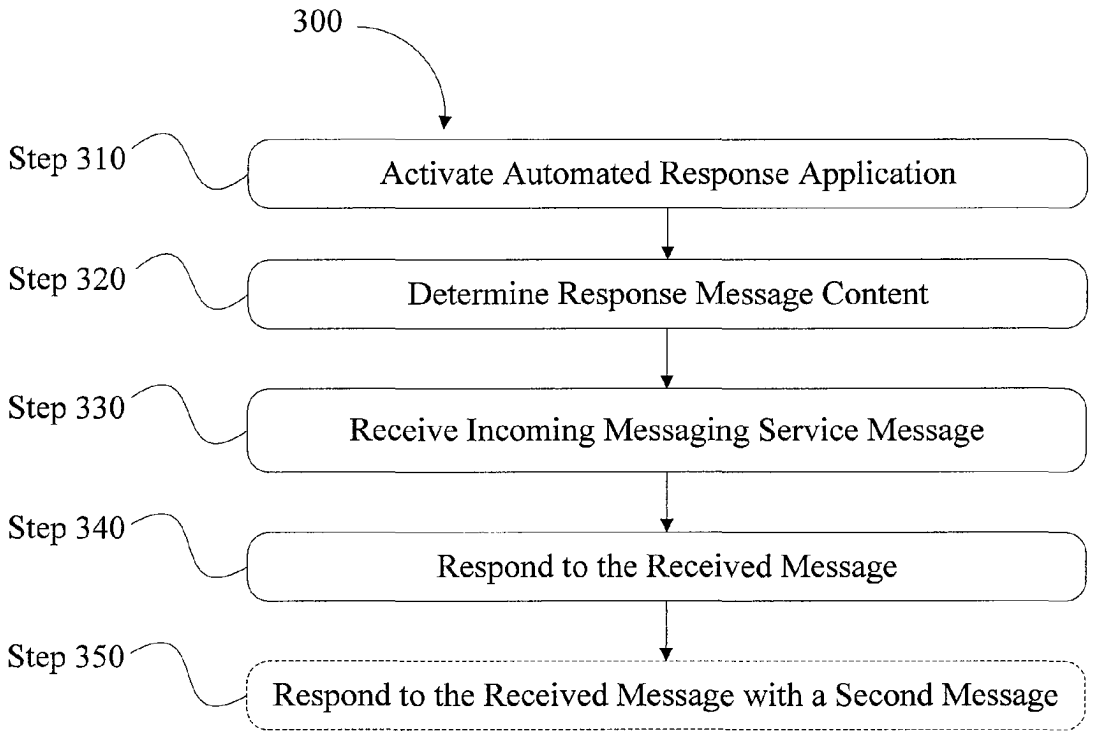
300
Step 310
Activate Automated Response Application
Step 320
Determine Response Message Content
Step 330
Receive Incoming Messaging Service Message
Step 340
Respond to the Received Message
Step 350
Respond to the Received Message with a Second Message

FIG. 3

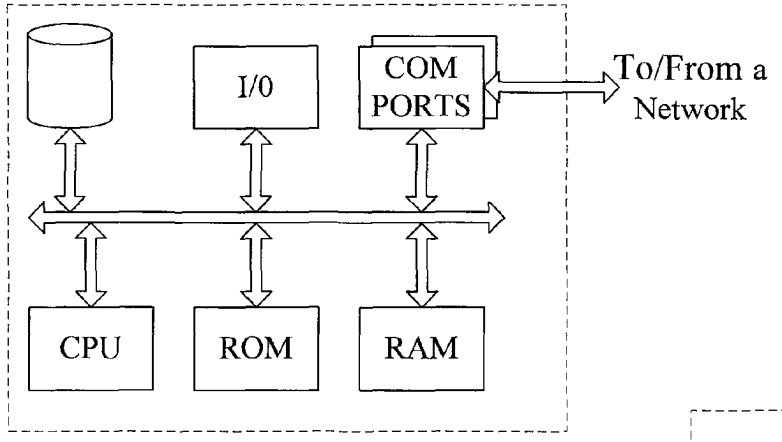
I/0
COM PORTS
To/From a Network
CPU
ROM
RAM

FIG. 4

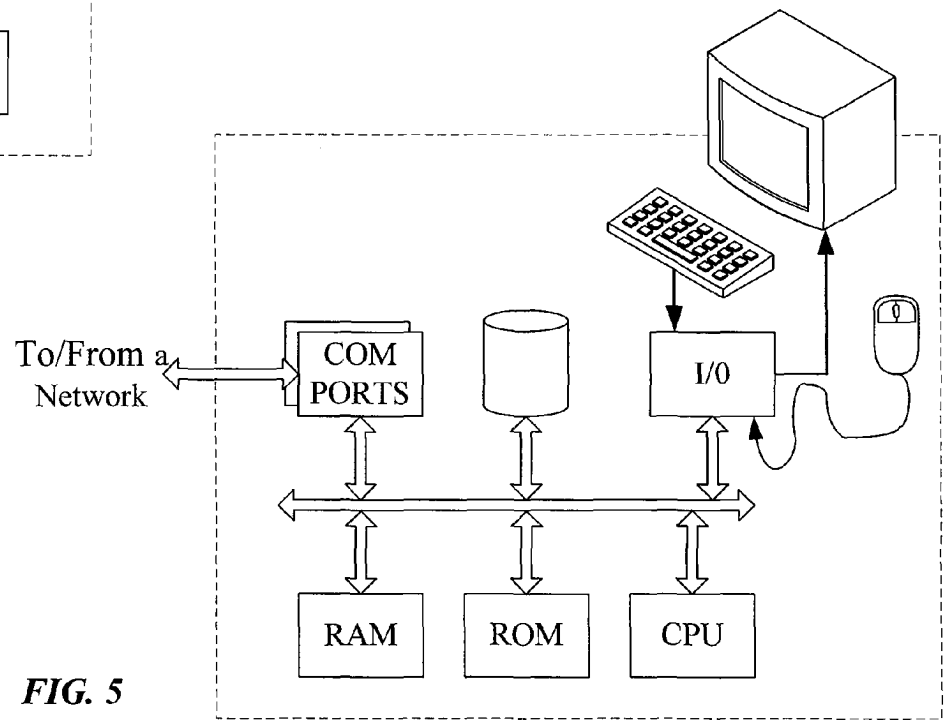
To/From a Network
COM PORTS
I/0
RAM
ROM
CPU

FIG. 5

SYSTEMS AND METHOD FOR AUTOMATING A RESPONSE FROM A MOBILE STATION

TECHNICAL FIELD

The present subject matter relates to automating a response from a mobile station. In particular, the present subject matter relates providing an automatic response from a mobile station when the user is unable to or should not respond (e.g., when driving an automobile).

BACKGROUND

There may be times when the user of a mobile station does not want to respond to various communications received by the mobile station. For example, a user may attend a movie and does not want to respond to messaging service messages (e.g., simple messaging service messages 'SMS', enhanced messaging service messages 'EMS', and multimedia messaging service messages 'MMS'). Traditionally, the received messages go unresponded to for a period of time.

Another example of a time when the user of a mobile station may not wish to respond to incoming messaging service messages is when the user is operating an automobile. In fact, mobile station usage while driving has been banned in at least one state and it is predicted others will follow soon. Not only is talking without a hands-free device prohibited, but e-mailing and texting (i.e., sending messaging service messages such as SMS, MMS, and EMS type messages) have also been banned.

While a delayed response may be acceptable in some cases, it may not always be desirable. Hence, it may be useful to develop systems and methods for a mobile station user to notify people who send them messaging service messages that the user is busy and can not reply to the message until a later time.

SUMMARY

The teachings herein alleviate one or more of the above noted problems with the known methods of responding to messaging service messages. As shown and described below, the various systems and methods enable an automatic response to a messaging service message in various environments. In some instances, an application executes on the mobile station. In an example, the core SMS delivery firmware in the mobile station is updated with at least a portion of the described functionality. In some instances, the described systems and methods enable an end-user of a mobile station to automatically notify senders of incoming text messages that the end-user is busy otherwise will not reply to the text message until a later time.

In operation, the exemplary functionality allows a customer via the SMS options panel on their main screen to turn on and off the 'Do Not Disturb' option. The option asks the customer to input the 'Do Not Disturb' message to be sent to anyone who sends the customer a SMS message while the 'Do Not Disturb' option is active (ON). Also, the functionality allows a SMS-to-Speech conversion if the inbound message is tagged with an 'emergency' keyword. For example, the emergency keyword can be the first word in the SMS message. Also, the described systems, methods, and functionality can leverage GPS signals to determine if the mobile station is moving above a predetermined rate (e.g., 10 miles-per-hour) and automatically activate a custom or default Do Not Disturb message.

In some configurations, an additional hardware device (e.g., a chip within an automobile can be used with the above-reference GPS option). Therefore, in some situations, the GPS option activates when the mobile station is in proximity of the additional hardware device. In some configurations, the additional hardware device can be standalone or embedded in the vehicle computer system and paired to the mobile station in the same manner as mobile stations are paired with Bluetooth devices.

Also, the described mobile station functionality can be scheduled for activation, operation, and deactivations. For example, the functionality can be scheduled for daily, hourly weekly activation periods.

In some examples, a method of automatically responding to a mobile messaging service message, received at a mobile station, is shown and described. The method includes activating an automated response application stored on the mobile station and determining response message content for use by the activated application. The method also includes receiving a mobile messaging service message, at the mobile station over a communications channel established between a mobile station and a mobile communications network while the application is active and under control of the active application and without interaction by the end-user of the mobile station, automatically responding to the received mobile messaging service message by sending a mobile messaging service message containing the response message content from the mobile station through the mobile communications network for a sender of the received mobile messaging service message.

In some situations, activating the application occurs automatically when the mobile station is moving at a rate that exceeds a predetermined threshold. Activating the application can also occur automatically when the mobile station is associated with a device within an automobile. The device can be a radio, a telematics unit, a fob or some other device. The application can be activated automatically at a predetermined time and on a scheduled basis.

In some instances, the method also converts the received mobile messaging service message to an audible message when the received mobile message is indicated as an emergency. Also, determining the response message content can include receiving and input of the response messaging service message from an end-user of the mobile station. The response message content can be selected from one or more stored response message content. Also, the method can include responding to each received messaging service message with another message when the application is deactivated.

In another example, a mobile station is shown and described. The mobile station includes a memory and a processor in communication therewith. The memory stores an automated response application. The processor executes the automated response application. The application determines response message content for use by the activated application and receives a mobile messaging service message, at the mobile station over a communications channel established between a mobile station and a mobile communications network while the application is active. The application also responds automatically and without interaction by the end-user of the mobile station, by sending a mobile messaging service message response to the received mobile messaging service message containing the response message content through the mobile communications network for a sender of the received mobile messaging service message.

In an additional example an article of manufacture is shown and described. The article includes a machine readable storage medium and executable program instructions embod-

ied in the machine readable storage medium that when executed by a mobile station causes the system to perform various functions. The functions can include activating an automated response application stored on the mobile station and determining response message content for use by the activated application. The functions also include receiving a mobile messaging service message, at the mobile station over a communications channel established between a mobile station and a mobile communications network while the application is active; and under control of the active application and without interaction by the end-user of the mobile station, automatically responding to the received mobile messaging service message by sending a mobile messaging service message containing the response message content from the mobile station through the mobile communications network for a sender of the received mobile messaging service message.

Additional advantages and novel features will be set forth in part in the description which follows, and in part will become apparent to those skilled in the art upon examination of the following and the accompanying drawings or may be learned by production or operation of the examples. The advantages of the present teachings may be realized and attained by practice or use of various aspects of the methodologies, instrumentalities and combinations set forth in the detailed examples discussed below.

BRIEF DESCRIPTION OF THE DRAWINGS

The drawing figures depict one or more implementations in accord with the present teachings, by way of example only, not by way of limitation. In the figures, like reference numerals refer to the same or similar elements.

FIG. **1** is a functional block diagram that depicts various components of an exemplary mobile communications network.

FIG. **2** is a simplified functional block diagram of a mobile station.

FIG. **3** is a flow chart showing an exemplary method of automatically responding to messaging service messages by a mobile station.

FIG. **4** is a simplified functional block diagram of a computer that may be configured as a host or server.

FIG. **5** is a simplified functional block diagram of a personal computer or other work station or terminal device.

DETAILED DESCRIPTION

In the following detailed description, numerous specific details are set forth by way of examples in order to provide a thorough understanding of the relevant teachings. However, it should be apparent to those skilled in the art that the present teachings may be practiced without such details. In other instances, well known methods, procedures, components, and/or circuitry have been described at a relatively high-level, without detail, in order to avoid unnecessarily obscuring aspects of the present teachings.

Functionality, systems, and methods of automatically responding to messaging service messages by a mobile station are shown and described. Various illustrated examples reference a "do-not-disturb" application that is executed on a mobile station. The application can be triggered to automatically execute based on numerous factors such as the rate of travel of the mobile station, the pairing of the mobile station with a portion of a vehicle, or in response to a predetermined schedule. Of course, the application may be manually started by the end-user of the mobile station as well. The application causes the mobile station to respond to the incoming messaging service message with a predetermined response, which the station sends back through the network to notify the sender that the recipient is not available to respond at the current time. Such an application provides, for example, increased safety when the end-user of the mobile station is operating a vehicle.

Reference now is made in detail to the examples illustrated in the accompanying drawings and discussed below. FIG. **1** illustrates a mobile communication network **10** as may be operated by a carrier or service provider to provide a wide range of mobile communication services and ancillary services or features to its subscriber customers and associated mobile station (MS) users. The elements collectively indicated by the reference numeral **10** generally are elements of the network and are operated by or on behalf of the carrier, although the mobile stations typically are sold to the carrier's customers. The mobile communication network **10** provides communications between mobile stations as well as communications for the mobile stations with networks and stations (not shown) outside the mobile communication network **10**.

The wireless mobile communication network **10** might be implemented as a network conforming to the code division multiple access (CDMA) IS-95 standard, the 3rd Generation Partnership Project 2 (3GPP2) wireless IP network standard or the Evolution Data Optimized (EVDO) standard, the Global System for Mobile (GSM) communication standard, a time division multiple access (TDMA) standard or other standards used for public mobile wireless communications. The mobile stations **13** may be capable of conventional voice telephone communications and data communications.

For purposes of later discussion, several mobile stations **13** appear in the drawing, to represent examples of the mobile stations that may receive various services via the mobile communication network **10**. For example, the mobile stations **13** can receive location based services (LBS) that leverage the use of an internal global position system (GPS) transceiver. The GPS receiver alone, or in combination (aGPS) with other network elements can determine the latitude and longitude of the mobile station **13**. The location of the mobile station **13** can be used to provide one or more location based services (LBS) and determine the rate at which a mobile station is traveling as well a direction of travel if needed. One of example of a location based service is navigational assistance (e.g., driving directions, turn-by-turn navigation, route calculation, points of interest location, etc.).

Mobile stations **13** typically take the form of portable handsets, smart-phones or personal digital assistants, although they may be implemented in other form factors. At least one of the mobile stations **13**, for example, can include a "Do Not Disturb" Application (DNDA) **15**, that can be downloaded to the mobile station **13** or added thereto in some other way. The DNDA **15** is provided in a mobile station **13** that otherwise provides normal mobile communications services of the network **10** to a user of the mobile station. The DNDA **15** may be provided in any one mobile station, in a group (but not all) of the mobile stations, or in all users' mobile stations **13**. The DNDA **15** can leverage and cooperate with the GPS receiver of the mobile station **13** to determine the rate of travel of the mobile station. For example, the rate of travel can be used to automatically enable the DNDA **15** to automatically respond to messaging service messages (e.g., simple messaging service messages (SMS), enhanced messaging service messages (EMS), and multi-media messaging service messages (MMS)) received at the mobile station **13** while it exceeds a predefined rate of travel.

In addition, a telematics unit **16** in an associated vehicle **14** can also be a mobile device that communicates with components of the mobile communications network **10**. From the view of the network **10**, the telematics unit **16** is essentially another mobile station **13**. Traditionally, the telematics unit **16** provides emergency and other related services. Examples include crash detection, road side assistance, and navigation related functionality, such as turn-by-turn directions. The telematics unit **16** is provisioned to operate in a manner similar to a mobile station **13**, although the network services available to telematics unit may be limited when compared to those provided to a typical mobile station **13**. For example, telematics unit **16** may be provisioned only to send/receive voice and SMS type messaging communications to/from call centers of a telematics service provider or specific elements (e.g., on-demand multimedia services servers) of the network **10**. One example of a telematics unit **16** is an On-Star unit. In some instances, the telematics unit **16** and the mobile station **13** can be paired using Bluetooth technology. The speed of the vehicle **14**, and by extension the speed of the telematics unit **16** and mobile station **13**, can be used to automatically activate the DNDA **15**.

For example, when the mobile station **13** travels at a rate of or greater than 10 miles-per-hour, the DNDA **15** can be activated to enable the mobile station **13** to begin automatically responding to incoming messaging services messages. This can occur when the vehicle **14** exceeds that rate of travel. Also, the DNDA **15** can be activated upon pairing the mobile station **13** with the telematics unit **16**. Further, the activation can occur when the mobile station **13** is paired with a Bluetooth communication unit (e.g., a hands-free unit or radio with Bluetooth capabilities **16'**) with the vehicle **14**. In another instance, a fob **16'** is attached to the vehicle **14** (e.g., behind the rearview mirror) and used to pair with mobile station **13** to cause the activation of the DNDA **15**.

The response message indicates that the end user of the mobile station **13** is traveling and can not respond at this time. The response message can be an SMS message back to the sender of the incoming SMS message. The response message can be user configurable each time the DNDA **15** application is executed. Also, predetermined responses can be created or provided and used. Also, response messages can be customized based on the sender of the incoming message.

The DNDA **15** can be configured to execute on many different types of mobile stations **13**. That is, the DNDA **15** program can be written to execute on a binary runtime environment for mobile (BREW-based) mobile station, a Windows Mobile based mobile station, android, I-Phone, Java Mobile, or RIM based mobile station. These types of devices can employ a multi-tasking operating system.

The mobile communication network **10** typically is implemented by a number of interconnected networks. Hence, the overall network **10** may include a number of radio access networks (RANs), as well as regional ground networks interconnecting a number of RANs and a wide area network (WAN) interconnecting the regional ground networks to core network elements. A regional portion of the network **10**, such as that serving mobile stations **13** will typically include one or more RANs and a regional circuit and/or packet switched network and associated signaling network facilities.

Physical elements of a RAN operated by one of the mobile service providers or carriers, include a number of base stations represented in the example by the base stations (BSs) **19**. Although not separately shown, such a base station **19** typically comprises a base transceiver system (BTS) which communicates via an antennae system at the site of base station and over the airlink with one or more of the mobile stations **13**, when the mobile stations are within range. Each base station typically includes a BTS coupled to several antennae mounted on a radio tower within a coverage area often referred to as a "cell." The BTS is the part of the radio network that sends and receives RF signals to/from the mobile stations **13** that the base station **19** currently serves.

The radio access networks also include a traffic network represented generally by the cloud at **21**, which carries the user communications for the mobile stations **13** between the base stations **19** and other elements with or through which the mobile stations communicate. In some examples, the mobile traffic network **21** includes network elements that support LBS services such as mobile switching centers (MSCs) **30**, signal transfer points (STP) **34**, mobile positioning center (MPC) **32**, and a position determining entity (PDE) **37**. The network can also include other elements that support functionality other than location based services such as messaging service messages and voice communications. Examples of other network elements that may be used in support of messaging service message communications include, but are not limited to, message centers (MCs) **39**, home location registries (HLRs) **38**, simple messaging service point-to-point (SMPP) gateway **40**, and other network elements such as wireless internet gateways (WIGs), and visitor location registers (VLRs) (not shown). Other individual elements such as switches and/or routers forming the traffic network **21** are omitted here form simplicity. It is understood that the various network elements can communicate with each other and other aspects of the mobile communications network **10** and other networks (e.g., the public switched telephone network (PSTN) and the Internet) either directly or indirectly.

The mobile switching center (MSC) **30** is responsible for managing communications between the mobile station and the other elements of the network **10**. In addition, the MSC **30** is responsible for handling voice calls and messaging service message requests as well as other services (such as conference calls, FAX and circuit switched data, messaging service communications, Internet access, etc.). The MSC **30** sets up and releases the end-to-end connection or session, and handles mobility and hand-over requirements during the call. The MSC **30** also routes messaging service messages to/from the mobile stations **13**, typically from/to an appropriate MC **39**. The MSC **30** is sometimes referred to as a "switch". The MSC **30** manages the cell sites, the voice trunks, voicemail, and SS7 links.

The message center (MC) **39**, in some examples, allows messaging service messages to be exchanged between mobile telephones and other networks. For SMS messaging, for example, the MC **39** receives packet communications containing text messages from originating mobile stations and forwards the messages via the signaling resources and the signaling channels to the appropriate destination mobile stations. The MC **39** may receive messages from external devices for similar delivery to mobile stations, and the MC **39** may receive similar messages from the mobile devices and forward them to servers or terminal devices, in either case, via an Internet Protocol (IP) packet data network.

In some examples, the MC **33** can also be considered or include functionality that may be considered that of a Short Messaging Service Message Center (SMSC) or a Message Register (MR). Wireless carriers developed the short message service (SMS) to transmit text messages for display on the mobile stations. In many existing network architectures, the SMS traffic uses the signaling portion of the network **21** to carry message traffic between a Short Message Service Center (SMSC) **39** and the mobile stations. The SMSC supports mobile station to mobile station delivery of text messages.

However, the SMSC also supports communication of messages between the mobile stations and devices coupled to other networks. For example, the SMSC **33** may receive incoming IP message packets from the Internet **29** for delivery via the network **21**, one of the base stations **19** and a signaling channel over the air link to a destination mobile station. For this later type of SMS related communications, the network **10** also includes one or more Short Message Peer-to-Peer (SMPP) protocol gateways **40**.

In other examples, the MC **39** can include functionality related to the Enhanced Messaging Service (EMS) or Multimedia Messaging service (MMS). An EMS message can have special text formatting (such as bold or italic), animations, pictures, icons, sound effects and special ring tones. MMS messages support the sending and receiving of multimedia messages (e.g., images, audio, video and their combinations) to (or from) MMS-enabled mobile stations. In some examples, the MC **39** can be considered in whole or in part a multimedia messaging service center (MMSC).

Although a single MC **39** is shown, a network **10** will often have many geographically dispersed MCs **39**. The MCs **39** can include destination routing tables (DRTs). In essence the DRTs are databases within the MCs **39**. A DRT contains a list of the MDNs which are associated with the various MCs **39**. For example, a first MDN is associated with a MC **39** in Minnesota while a second MDN is associated with a MC **39** in Virginia. The DRTs are used to determine which MC **39** should attempt to deliver an incoming messaging service message to the destination MDN. For example, if a user associated with the MC in Minnesota sends an SMS to a user associated with the MC **39** in Virginia, the Minnesota MC **39** sends the SMS to the Virginia MC **33** for delivery to the destination MDN. The communication among the MCs **39** occurs using know protocols such SMPP and the like.

The HLR **38**, in some examples, stores a subscriber profile for each of the wireless subscribers and their associated mobile stations **13**, **15**, and **17**. The HLR **38** may reside in an MSC **30** or in a centralized service control point that communicates with the MSC(s) **34** via an out-of-band signaling system such as an SS7 network. The HLR **38** stores for each mobile subscriber the subscriber's mobile directory number (MDN), the mobile identification number (MIN), and information specifying the wireless services subscribed to by the mobile subscriber, such as numeric paging or text-based paging, data communication services, etc. Of course, the HLR **38** can also be a stand-alone device. The HLR also tracks the current point of attachment of the mobile station to the network, e.g., the identification of the MSC **30** with which the mobile station is currently registered to receive service.

The visitor location register (VLR) (not shown) is, in some examples, a temporary database of the mobile stations that have roamed into the particular area which it serves. The VLRs for a region often are implemented in or in association with a MSC **30**. Each base station **19** in the network is served by a single VLR, hence a subscriber cannot be present in more than one VLR at a time. The data stored in the VLR has either been received from the HLR **38**, or collected from the mobile station.

The SMPP gateway **40** provides functionality to transport messaging service messages to other mobile communication networks and also receive messaging service messages from other networks. The SMPP gateway **34** supports communications using the SMPP protocol. SMPP gateways **40** are Short Message Peer-to-Peer (SMPP) gateways **40** used to connect the wireless communication network (such as an Internal Protocol IP network on the left of the Gateway) to another network (such as a public Internet network on the right of the Gateway). The SMPP Gateway **40** allows the MC **39** to receive and send messages in IP packet format. The SMPP Gateway **40** is an entity within the wireless network **10** that acts as an intermediary between the wireless service provider network and other networks. For example, the SMPP Gateway **40** converts messages in protocol(s) used by other applications and devices, e.g. Extensible Markup Language (XML), Hypertext Mail Protocol (HTMP), etc., to and from the SMPP protocol. The SMPP messages ride on IP transport, e.g. between the SMPP Gateway **40** and the MC **39**.

The PDE **37** is a network element that manages the position or geographic location determination of each mobile station **13**. The exemplary network **10** utilizes an assisted GPS (aGPS) approach to the determination of mobile station location, in which the mobile station **13** takes measurements of signals from a number of GPS satellites **39** and interacts with the PDE **37** to process those measurements so as to determine the latitude and longitude (and possibly altitude) of the current location of the mobile station **13**. The location information may be provided to another entity, such as an emergency service point in a 911 scenario or used to calculate a rate of travel based on changes in the location of the mobile station.

The PDE system **37** is essentially a general purpose programmable device with an interface for data communication via the network **10** running server software and running programming for implementation of the PDE functions, such as device authentication, data cache and processing queue management. The PDE **37** stores (e.g. in cache memory) or has access to a complete and up to date set of the satellite data for the constellation of GPS satellites **39** needed to allow computation of position based on pseudorange measurements of satellite signals by mobile stations **13**. The data may include that associated with the entire constellation but will at least include the data for the satellites expected to be broadcasting into the geographic region serviced by the network **10**.

When a mobile station **13** attempts a GPS position fix, the mobile station **13** provides information allowing the PDE **37** to perform a pre-fix. Typically, the mobile station **13** will provide data identifying the base station **19** through which it is receiving service (and possibly the serving sector). In some implementations, the PDE **37** may receive data regarding several base stations/sectors and signal strengths thereof, for trilateration. The PDE **37** uses information about base station location(s) to process the data received from the mobile station so as to determine a region (e.g. area of the cell or sector, or a general area triangulated based on signals from several base stations) that the mobile station **13** is likely located within. The PDE **37** then uses the pre-fix location to parse the satellite data down, to assistance data that the mobile station **13** at the particular location needs in order to take GPS readings. The PDE **37** sends the parsed satellite data to the mobile station **13**, for use in taking measurements of signals from appropriate satellites **39**. The GPS assistance data may contain selected satellite almanac, satellite visibility, Doppler and clock correction information.

The mobile station **13** will, in turn, use this information (also known as acquisition assistance records) to take multiple satellite pseudorange measurements. Depending on the device/network configuration, the mobile station **13** or the PDE **37** can then calculate a final fix using these pseudorange measurements. The final fix computation provides latitude and longitude (and possibly altitude) coordinates for the current location of the mobile station **13**. Using multiple measurements, the mobile station **13** can determine a rate of travel of the mobile station **13**. Exceeding a predetermined rate can cause the DNDA **15** to be executed by the mobile station **13**.

If the mobile station **13** has full GPS computation capability, the station **13** can calculate the current latitude and longitude of the mobile station itself. This is useful when the mobile station operates in stand-alone mode and calculates the rate of travel of the mobile station **13**.

In addition, the traffic network portion **21** of the mobile communications network **10** connects to a private data network **36**. The private data network **36** connects to the traffic network portion **21** via a gateway (not shown). The gateway can provide protocol conversions between the protocols used by the traffic network **21** and the protocols used by the private data network **36**.

In communication with the private data network **36** can be various auxiliary services servers that provide additional services to the users of the network **10** and/or to operations support personnel of the service provider or carrier that operates the network **10**. For example, the carrier will also offer its subscribers on-line access to a variety of functions related to the subscribers' accounts, such as review of billing statements and usage data, on-line payment, subscription changes, password control or the like. For that purpose, the carrier in our example operates a customer account web server **43**, offering a 'MyAccount' (Now MyVerizon) type subscriber interface via the Internet. Hence, a user's terminal, such as PC **31**, may be used to access on-line information about a subscriber's account, which the mobile carrier makes available via the carrier's MyAccount web site accessible through the Internet **29**. Of note for purposes of the present discussions, the web site provides secure user access to configure the operation of the DNDA **15**, for example, to set-up a schedule of activating and deactivating the DNDA **15**. For example, if the account holder and user of the DNDA **15** has a regularly scheduled meeting, they can configure the DNDA **15** to execute during that period using the web site. Of course, this can also be configured on the mobile station **13** via the DNDA **15**. Further, one or more response message can be configured, created, or edited using the web site or the user interface on the mobile station and the DNDA.

With reference to FIG. **2** a block diagram illustrating a GPS enabled mobile station **13** is shown and described. Although the station **13** may be incorporated into a vehicle mounted mobile unit or into another device, such as a portable personal computer or PDA, for discussion purposes the illustration shows the station **13** in the form of a handset. The handset embodiment of the mobile station **13** functions as a digital wireless telephone station. For that function, the station **13** includes a microphone **42** for audio signal input and a speaker **43** for audio signal output. The microphone **42** and speaker **43** connect to voice coding and decoding circuitry (vocoder) **45**. For a voice telephone call, for example, the vocoder **45** provides two-way conversion between analog audio signals representing speech or other audio and digital samples at a compressed bit rate compatible with the digital protocol of wireless telephone network communications or voice over packet (Internet Protocol) communications.

For digital wireless communications, the mobile station **13** also includes a digital transceiver (XCVR) **47**. The concepts discussed here encompass embodiments of the station **13** utilizing any digital transceivers that conform to current or future developed digital wireless communication standards. For example, the transceiver **47** could be a TDMA or GSM unit designed for cellular or PCS operation. In the present embodiments, the digital transceiver **47** is a CDMA transceiver compatible with operation via an IS-95 network or a 1× network, to provide both voice and packet data communications. Also, the mobile station **13** may utilize either or both of 3GPP2 (1XRTT and EVDO) technologies and 3GPP (LTE/GSM/UMTS) technologies. In other Multimode transceivers also may be used.

The transceiver **47** provides two-way wireless communication of information, such as vocoded speech samples and/or digital message information. The transceiver **47** also sends and receives a variety of signaling messages in support of the various services provided via the station **13** and the network **10**. Communications via the transceiver **47** and the antenna **49** may include various messages related acquisition assistance, position determination and related location based services. Communications via the transceiver **47** and the antenna **49** also include various SMS, EMS and/or MMS messages, including the automatic response messages controlled by execution of the DNDA **15**. The transceiver **47** connects through RF send and receive amplifiers (not separately shown) to an antenna **49**. In the example, the transceiver **47** is configured for RF communication in accord with a digital wireless protocol. The station **13** may include one or more additional transceivers, for example, for operation in an analog mode or in accord with an alternative digital standard.

A microprocessor **51** serves as the programmable controller in that it controls all operations of the mobile station **13** in accord with programming that it executes. The mobile station **13** also includes flash type program memory **53** and/or a non-volatile random access memory (RAM) **55**, for storing various software routines and mobile configuration settings, such as mobile identification number (MIN), response messages, etc. In a present implementation, the flash type program memory **55** stores an operating system, device driver software, call processing software and vocoder control software; and the memory may store any of a wide variety of other applications, such as client browser software and short message service software.

The mobile station **13** can also include other functionality. For example, the mobile station can include a Bluetooth transceiver (not show). The Bluetooth transceiver can be used to pair the mobile station **13** with a portion of the vehicle **14**.

Of note for purposes of this discussion, the stored program software will also include the Do-Not-Disturb Application (DNDA) **15**. The DNDA **15** provides various functionality during its operation. For example, the DNDA **15**, when active, enables the mobile station to automatically respond to incoming messaging service messages with a response message such as "I am not available to respond at this time." Of course, the response message is user configurable both via the mobile station **13** and via the above-described web site. For example, when the end-user of the mobile station **13** travels at a rate equal to or greater than 10 miles-per-hour the DNDA **15** is begins executing on the mobile station **13** automatically. Thus, the safety of the end-user is enhanced. In such an example, the mobile station **13** leverages the GPS receiver **59** by taking location measurements to determine the rate of travel of the mobile station **13**.

Further, the DNDA **15**, in some instances, can enable the mobile station to convert any incoming messaging service message to speech. Thus the end-user of the mobile station can hear the incoming message via the speaker **43** of the mobile station **13**. The DNDA **15** would cause the mobile station to automatically respond to the incoming message with the predetermined response to alert the sender not to expect a response.

Also, the DNDA **15** may enable filtering of the incoming messages to various degrees. For example if the incoming message is tagged with a key phrase or term (e.g., emergency), the DNDA **15** can alert the end-user of the mobile station **13** accordingly. For example, a special tone (e.g.,

siren) can be used to alert the end-user. Also, such a tag can trigger the text-to-speech conversion. The tag can occur at a predetermined place in the message such as the first term or last term.

Additional functionality of the DNDA **15** can include sending a second response message to each or a sub-set of the received incoming messages while the DNDA **15** was active upon exiting the DNDA **15**. For example, if the end-user arrives at their destination and thus slows to a rate below the predetermined rate, the DNDA **15** can cause the mobile station **13** to send a second message to one or more senders of messages during the time of travel. The second message may alert the senders that the end-user has arrived at their destination and will contact them soon. Of course, the second messages can also be triggered based on the unpairing of the mobile station **13** and the telematics unit **15**. Also, the end-user can exit the DNDA **15** using the mobile station **13**.

In one instance, the DNDA **15** is downloaded from one of the other network elements to the mobile station **13** and stored therein. Another approach includes downloading the programming over the air, from a third party server (not shown), from a OTAF provisioning system (not shown) or the like, The DNDA **15** can also be loaded on the mobile station **13** by connecting the mobile station **13** to a personal computer (PC) and transferring the DNDA **15** from the PC to the mobile station **13** using known techniques.

The memories **53**, **55** also store various data, such as telephone numbers and server addresses and data input by the user. For example, the memory **53** and/or the memory **55** will at various times one or more predetermined response messages used by the DNDA **15**. Similarly, one of the memories may store data for an activation schedule for the DNDA **15**.

As shown, the digital telephone handset **13** includes a display **56** for displaying messages, menus or the like, call related information dialed by the user, calling party numbers, incoming messaging service messages, and other information. Also, the display is used to input information such as a response message or to configure the DNDA **15**. If the mobile station executes location based service applications, the display **56** may provide other information regarding the determined location and/or surrounding areas, e.g. LAT/LON data, a rate of travel of the mobile station **13**, and other information. A keypad **58** enables dialing digits for voice and/or data calls and generating selection inputs keyed by the user based on any displayed menu. The display **56** and keypad **58** are the physical elements providing a textual or graphical user interface. In addition to normal telephone related input/output, these elements are also used for display of menus and other information to the user and user input of selections. For example, these elements can be used to input information related to the response message or to configure other parameters of the DNDA **15**. Also, the SMS options panel provided on certain mobile stations can be used to input information related to the response message. Of course other user interface elements may be used, such as a stylus and touch sensitive display screen, as in a PDA or mobile smartphone.

For position determination and associated location based services such as rate of travel determination, the mobile station **13** also includes a GPS receiver **59**. Under control of the microprocessor **51**, the GPS receiver **59** receives and processes signals from one or more satellites of the constellation of GPS satellites **39**. From its processing, the GPS receiver **59** supplies GPS data to the microprocessor **51**, such as pseudorange measurements and associated PN codes for measured satellite signals. Associated computations may be performed in the microprocessor or by a processor or the like included in the GPS receiver.

If the receiver **59** or the combination of the receiver and the microprocessor **51** are configured to provide a fully functional GPS position determination device, the station **13** could process the pseudorange measurements, absolute times of transmission of the GPS signals, and the satellite position data to compute the station's latitude and longitude. However, because of size/space/cost constraints on the design of the mobile stations **13**, the GPS receiver **59** in the mobile station **13** often chooses to use only a reception capability, not the full GPS processing capability to resolve position from signals received from the satellites **39**. Hence, the receiver **59** supplies the GPS measurement and code data to the microprocessor **51**, which in turn formats the data and sends it to the PDE **37** using the wireless transceiver **47**. The PDE **37** performs the data processing necessary to determine the latitude and longitude of the station **13** and transmits that data where needed, which in some cases will be back to the mobile station **13** for further processing by execution of the DNDA **15** or other applications of the mobile station **13**.

With reference to FIG. **3** an exemplary method **300** of automatically responding to a mobile messaging service message, received at a mobile station **13** is shown and described. The method **300** includes activating (step **310**) an automated response application (e.g., the DNDA **15**) resident in the user's mobile station **13**. As discussed above, the application can be activated in many ways. For example, the end-user of the mobile station **13** can activate the application via the user interface of the mobile station **13**. The application can be configured to execute at scheduled times. The schedule can be created and modified via the user interface of the mobile station **13** and the web site. Also, the application can be executing automatically when the mobile station exceeds a predetermined rate of travel (e.g., seven miles-per-hour). Also, the application can be executed in response the mobile station **13** being paired to the vehicle **14**. In some examples, the mobile station **13** is paired to telematics unit **16** of the vehicle. Of course, the mobile station can be paired to other devices (e.g., a fob **16'**, a radio **16'**, or a hands-free Bluetooth unit) within the vehicle.

The method **300** also includes determining (step **320**) response message content for use by the activated application. For example, the response message can be preconfigured using the mobile station **13** and the web site. Also, different response messages can be sent to senders of different incoming messages. For example, based on the originating MDN of the incoming message, the application may cause the mobile station to generate and send back a specific response message. Also, depending on the time of day a specific response message can be sent. For example, if it is after 10 pm, the response message may indicate that the end-user will respond the next business day.

The method **300** also includes receiving (step **330**) a mobile messaging service message. The message is received at the mobile station over a communications channel established between a mobile station and a mobile communications network while the application is active. For example, the mobile station **13** may receive an SMS message via the network **10** via the MC **39**, and other network components. The specific sequence of steps of how an SMS or other messaging service message (e.g., EMS or MMS) propagates through the network **10** are omitted.

Additionally, the method **300** includes responding (step **340**) to the received message. Execution of the application by the processor causes the mobile station to respond without interaction by the end-user of the mobile station. That is, the end-user is not required to trigger the response by the mobile station. For example, the message is automatically generated

and sent through the network and is addressed for communication through the network back to the sender of the incoming message that the mobile station received in step **330**, without requiring the end-user to interact with the mobile station **13**.

In some instances, the end-user can be prompted to send the response but is not required to generate the content of the response. For example, a predetermined response message is created but not sent until the end-user presses a specified key. The response message is a mobile messaging service message containing the response message content.

In another instance, the method **300** also includes automatically responding (step **350**) to one or more of the received messages with a second message when the application ceases execution. The second message can also be an SMS or other messaging service type message sent back through the network for the sender of the received incoming message. The second response message can indicate the end-user of the mobile station has stopped using the application (e.g. do-not-disturb is no longer active) and will be able to respond to the original message in due course. For example, if the end-user is traveling to a specific destination the DNDA **15** enables the user's mobile station to respond to a received message during their travel. Upon reaching the destination, the end-user exits the DNDA **15**. Upon initiating the exit, the DNDA **15** causes the mobile station to send a second response message to the one or more of the received messages to let the sender(s) know that the end-user may be able to respond soon. Other events can trigger the second message. For example, the unpairing of the mobile station **13** and the vehicle **14** or the mobile station **13** remaining at a rate of travel less than the predetermined threshold for a specific period of time.

FIGS. **4** and **5** provide functional block diagram illustrations of general purpose computer hardware platforms. FIG. **4** illustrates a network or host computer platform, as may typically be used to implement a server or other network element (e.g., MSC **30**, PDE **37**, . . .). FIG. **5** depicts a computer with user interface elements, as may be used to implement a personal computer (PC) or other type of work station or terminal device, although the computer of FIG. **5** may also act as a server if appropriately programmed. For example, such general purpose platforms may store the DNDA **15** and load the application into a mobile station **13**, via a network communication if the platform is a server or via a local link if the platform is a PC. It is believed that those skilled in the art are familiar with the structure, programming and general operation of such computer equipment and as a result the drawings should be self-explanatory.

The hardware elements, operating systems and programming languages of such computers are conventional in nature, and it is presumed that those skilled in the art are adequately familiar therewith. Of course, the server functions may be implemented in a distributed fashion on a number of similar platforms, to distribute the processing load.

Hence, aspects of the methods of automatically responding to messaging service messages by a mobile station **13** can be executed on a mobile station and on a network element such as a server. Program aspects of the technology may be thought of as "products" or "articles of manufacture" typically in the form of executable code and/or associated data that is carried on or embodied in a type of machine readable medium. "Storage" type media include any or all of the memory of the mobile stations, computers, processors or the like, or associated modules thereof, such as various semiconductor memories, tape drives, disk drives and the like, which may provide storage at any time for the software programming. All or portions of the software may at times be communicated through the Internet or various other telecommunication networks. Such communications, for example, may enable loading of the software from one computer or processor into another computer or processor. For example, the DNDA **15** software can be communicated to the mobile station **13**. Thus, another type of media that may bear the software elements includes optical, electrical and electromagnetic waves, such as used across physical interfaces between local devices, through wired and optical landline networks and over various air-links. The physical elements that carry such waves, such as wired or wireless links, optical links or the like, also may be considered as media bearing the software. As used herein, unless restricted to tangible non-transitory "storage" media, terms such as computer or machine "readable medium" refer to any medium that participates in providing instructions to a processor for execution.

Hence, a machine readable medium may take many forms, including but not limited to, a tangible storage medium, a carrier wave medium or physical transmission medium. Non-volatile storage media include, for example, optical or magnetic disks, such as any of the storage devices in any computer (s) or the like, such as may be used to implement the data aggregator, the customer communication system, etc. shown in the drawings. Volatile storage media include dynamic memory, such as main memory of such a computer platform. Tangible transmission media include coaxial cables; copper wire and fiber optics, including the wires that comprise a bus within a computer system. Carrier-wave transmission media can take the form of electric or electromagnetic signals, or acoustic or light waves such as those generated during radio frequency (RF) and infrared (IR) data communications. Common forms of computer-readable media therefore include for example: a floppy disk, a flexible disk, hard disk, magnetic tape, any other magnetic medium, a CD-ROM, DVD or DVD-ROM, any other optical medium, punch cards paper tape, any other physical storage medium with patterns of holes, a RAM, a PROM and EPROM, a FLASH-EPROM, any other memory chip or cartridge, a carrier wave transporting data or instructions, cables or links transporting such a carrier wave, or any other medium from which a computer can read programming code and/or data. Many of these forms of computer readable media may be involved in carrying one or more sequences of one or more instructions to a processor for execution

Those skilled in the art will recognize that the present teachings are amenable to a variety of modifications and/or enhancements. For example, although some aspects of the present disclosure describe the DNDA **15** responding only to messaging service messages, it is possible to extend the teaching to respond to incoming voice telephone calls with messaging service messages as well.

While the foregoing has described what are considered to be the best mode and/or other examples, it is understood that various modifications may be made therein and that the subject matter disclosed herein may be implemented in various forms and examples, and that the teachings may be applied in numerous applications, only some of which have been described herein. It is intended by the following claims to claim any and all applications, modifications and variations that fall within the true scope of the present teachings.

APPENDIX: ACRONYM LIST

The description above has used a large number of acronyms to refer to various services, messages and system components. Although generally known, use of several of these acronyms is not strictly standardized in the art. For the con-

venience of the reader, the following list correlates terms to acronyms, as used in the detailed description above.

3GPP2: 3rd generation partnership project 2
aGPS: assisted global position system
ANA: assisted navigation application
BS: base station
BTS: base transceiver system
CDMA: code division multiple access
CD-ROM: compact disc read-only memory
DNDA: do not disturb application
DVD: digital video disc
DVD-ROM: digital versatile (video) disc read-only memory
EPROM: erasable programmable read-only memory
EV-DO: evolution-data optimized
ESN: electronic serial number
GDF: geographic data files
GPS: global positioning system
GSM: global system for mobile communications
HLR: home location register
IP: Internet protocol
IR: infrared
LBS: location based services
LCD: liquid crystal display
LTE: long-term evolution
MC: message center
MIN: mobile identification number
MPC: mobile positioning center
MS: mobile station
MSC: mobile switching center
PC: personal computer
PDE: position determining entity
PN: pseudo-random noise
PROM: programmable read-only memory
PSTN: public switched telephone network
RAM: random access memory
RAN: radio access network
RF: radio frequency
SIF: Standard Interchange Format
SMS: short messaging service
SS7: signaling system 7
STP: signaling transfer points
TCP: transmission control protocol
TDMA: time-division multiple access
UMTS: universal mobile telecommunications system
USB: universal serial bus
VLR: visitor location register
WAN: wide are network
XCVR: transceiver

What is claimed is:

1. A method of automatically responding to a mobile messaging service message, received at a mobile station, the method comprising steps of:

activating an automated response application stored on the mobile station;

determining response message content for use by the activated application;

receiving a mobile messaging service message, at the mobile station over a communications channel established between a mobile station and a mobile communications network, while the application is active; and

under control of the active application and without interaction by the end-user of the mobile station, automatically responding to the received mobile messaging service message by sending a mobile messaging service message containing the response message content from the mobile station through the mobile communications network for a sender of the received mobile messaging service message.

2. The method of claim **1**, wherein activating the application occurs automatically when the mobile station is moving at a rate that exceeds a predetermined threshold.

3. The method of claim **1**, wherein activating the application occurs automatically when the mobile station is associated with a device within an automobile.

4. The method of claim **3**, wherein the device is selected from the group consisting of a radio, a telematics unit, and a fob.

5. The method of claim **1**, wherein activating the application occurs automatically on a scheduled basis.

6. The method of claim **1** further comprising converting the received mobile messaging service message to an audible message when the received mobile message is indicated as an emergency.

7. The method of claim **1**, wherein determining the response message content comprises receiving an input of the response messaging service message from an end-user of the mobile station.

8. The method of claim **1**, wherein determining the response message content comprises selecting a stored response message content.

9. The method of claim **1** further comprising automatically responding to each received messaging service message with another message when the application is deactivated.

10. A mobile station, comprising:

a memory storing an automated response application; and

a processor, in communication with the memory, the processor executing the automated response application when the application is active, wherein execution of the application configures the processor so that the mobile station is capable of performing functions to:

determine response message content for use by the activated application;

receive a mobile messaging service message, at the mobile station over a communications channel established between the mobile station and a mobile communications network while the application is active; and

automatically and without interaction by the end-user of the mobile station, send a mobile messaging service message response to the received mobile messaging service message containing the response message content through the mobile communications network for a sender of the received mobile messaging service message.

11. The mobile station of claim **10**, wherein the automated response application is activated automatically when the mobile station is moving at a rate that exceeds a predetermined threshold.

12. The mobile station of claim **10**, wherein the automated response application is activated automatically when the mobile station is associated with a device within an automobile.

13. The mobile station of claim **10**, wherein the automated response application is activated automatically on a scheduled basis.

14. The mobile station of claim **10**, wherein application further configures the processor so that the mobile station is capable of converting the received mobile messaging service message to an audible message when the received mobile message is indicated as an emergency.

15. The mobile station of claim **10**, wherein application further configures the processor so that the mobile station is

capable of receiving an input of the response messaging service message from an end-user of the mobile station for use by the activated application.

16. The mobile station of claim **10**, wherein application further configures the processor so that the mobile station is capable of selecting a stored response message content for use by the activated application.

17. The mobile station of claim **10**, wherein application further configures the processor so that the mobile station is capable of automatically responding to each received messaging service message with another message when the application is deactivated.

18. An article of manufacture comprising:

a machine readable storage medium; and

executable program instructions embodied in the machine readable storage medium that when executed by a programmable mobile station causes the mobile station to perform functions comprising:

activating an automated response application stored on the mobile station;

determining response message content for use by the activated application;

receiving a mobile messaging service message, at the mobile station over a communications channel established between a mobile station and a mobile communications network, while the application is active; and

under control of the active application and without interaction by the end-user of the mobile station, automatically responding to the received mobile messaging service message by sending a mobile messaging service message containing the response message content from the mobile station through the mobile communications network for a sender of the received mobile messaging service message.

19. The article of manufacture of claim **18**, wherein activating the application occurs automatically when the mobile station is moving at a rate that exceeds a predetermined threshold.

20. The article of manufacture of claim **18**, wherein activating the application occurs automatically when the mobile station is moving at a rate that exceeds a predetermined threshold.

21. The article of manufacture of claim **18**, wherein activating the application occurs automatically when the mobile station is associated with a device within an automobile.

22. The article of manufacture of claim **18**, wherein activating the application occurs automatically on a scheduled basis.

23. The article of manufacture of claim **18**, wherein the functions further comprise converting the received mobile messaging service message to an audible message when the received mobile message is indicated as an emergency.

24. The article of manufacture of claim **18**, wherein determining the response message content comprises receiving an input of the response messaging service message from an end-user of the mobile station.

25. The article of manufacture of claim **18**, wherein determining the response message content comprises selecting a stored response message content.

26. The article of manufacture of claim **18**, the functions further comprising automatically responding to each received messaging service message with another message when the application is deactivated.

* * * * *