**UNITED STATES PATENT AND TRADEMARK OFFICE**

---

**BEFORE THE PATENT TRIAL AND APPEAL BOARD**

---

CANADIAN SOLAR INC.,
Petitioner,

v.

MAXEON SOLAR PTE. LTD.
Patent Owner

Patent No. 8,222,516
Issued: July 17, 2012
Filed: February 20, 2008
Inventor: Peter John Cousins
Title: Front Contact Solar Cell with Formed Emitter
*Inter Partes* Review No. IPR2024-01039

---

**DECLARATION OF SANJAY BANERJEE REGARDING U.S. PATENT NO. 8,222,516**

---

I, Sanjay Banerjee, do hereby declare and state, that all statements made herein of my own knowledge are true and that all statements made on information and belief are believed to be true; and further that these statements were made with the knowledge that willful false statements and the like so made are punishable by fine or imprisonment, under Section 1001 of Title 18 of the United States Code.

Executed on: June 24, 2024

Sanjay Banerjee

Sanjay Banerjee

## TABLE OF CONTENTS

**Page**

**I. INTRODUCTION ..... 1**

A. Engagement ..... 1

B. Background and Qualifications ..... 1

C. Compensation and Prior Testimony ..... 4

D. Information Considered ..... 4

**II. LEGAL STANDARDS FOR PATENTABILITY ..... 5**

A. Anticipation ..... 6

B. Obviousness ..... 8

**III. THE 516 PATENT ..... 14**

A. The Person Of Ordinary Skill in the Art ..... 14

B. The 516 Patent's Effective Filing Date ..... 15

C. The 516 Patent's Specification ..... 15

D. The 516 Patent's Claims ..... 16

E. The 516 Patent's Prosecution History ..... 17

F. Known Technologies That The Examiner Did Not Consider ..... 19

G. PTAB's Unpatentability Decisions in Two Continuation Applications ..... 23

H. Claim Construction ..... 25

**IV. CLAIMS 9-11 ARE UNPATENTABLE OVER MEIER, OKAYASU, BORDEN, AND JORDAN ..... 25**

A. Prior Art Status ..... 25

B. Meier (EX1011) ..... 27

C. Okayasu (EX1012) ..... 28

D. Borden (EX1009) ..... 30

E. Jordan (EX1015) ..... 31

F. The Combination of Meier, Okayasu, Borden, and Jordan .....33
1. Modifying Meier with Polysilicon Emitter and Oxide Layer.....34
2. Modifying Meier with Textured Front Surface .....37
G. Meier, Okayasu, Borden, and Jordan Met All Claim Elements.....38
1. Preamble.....38
2. [9a] Substrate with a textured front surface.....41
3. [9b] Back Surface Emitter.....42
4. [9c] Oxide layer.....43
5. [9d]-[9e] First and second metal contacts.....44
6. [9f] Configured to power external circuit.....46
7. Claim 10 - Anti-reflective layer.....47
8. Claim 11 – N-type substrate and P-type emitter.....49

**V. CLAIMS 9-11 ARE UNPATENTABLE OVER MEIER, OKAYASU, FOGLIETTI, GAN, AND JORDAN .....49**
A. Foglietti (EX1014) .....50
B. Gan (EX1007) .....51
C. Combination of the Modified Meier with Foglietti and Gan.....53

**VI. FROITZHEIM AND GAN WOULD HAVE RENDERED CLAIMS 9-12 OBVIOUS .....57**
A. EP1732142A1 to Froitzheim (EX1006).....57
B. Combination of Froitzheim and Gan.....60
1. Motivation to Modify Froitzheim with Gan .....61
2. Reasonable Expectation of Success .....68
C. Combination of Froitzheim and Gan Met All Claim Elements .....69
1. Claim 9 .....69
2. Claim 10 .....79
3. Claim 11 .....80
4. Claim 12 .....81

**VII. CLAIMS 9-12 ARE UNPATENTABLE OVER FROITZHEIM AND KWARK.....83**

A. Kwark (EX1008) Overview .....83

B. Motivation to Modify Froitzheim with Kwark .....85

C. Reasonable Expectation of Success .....87

D. Froitzheim and Kwark Disclosed All Elements.....88

**VIII. CLAIMS 9-12 ARE UNPATENTABLE OVER FROITZHEIM IN VIEW OF BORDEN.....91**

A. Motivation to Modify Froitzheim with Borden .....91

B. Reasonable Expectation of Success .....92

C. Froitzheim and Borden Disclosed All Elements.....93

**IX. OBJECTIVE FACTORS SUPPORT OBVIOUSNESS.....94**

A. No Commercial Success Attributable to the 516 Patent.....94

B. No Evidence of Unexpected Results.....102

# I. INTRODUCTION

## A. Engagement

1. I have been retained by counsel for Canadian Solar Inc. ("CSI" or "Petitioner") as an expert witness in the above-captioned proceeding. I have been asked to provide my opinions about the state of the art of the technology related to U.S. Patent No. 8,822,516 ("the 516 Patent") (EX1001) and on the patentability of claims 9-12 of this patent. The following is my written declaration on these topics.

## B. Background and Qualifications

2. I currently serve as the Cockrell Family Regents Chair Professor of Electrical and Computer Engineering and Director of the Microelectronics Research Center at the University of Texas at Austin ("UT"). Prior to this position, I was first an Assistant Professor (September 1987 - August 1990) and later an Associate Professor (September 1990 - August 1993) at UT, before being named a Professor in September 1993. Prior to starting my academic work at UT, I was a member of the technical staff at Texas Instruments (Corporate R&D) from the time I completed my doctoral studies in 1983 until August 1987.

3. I received my Ph.D. in Electrical Engineering from the University of Illinois in 1983. I also received an M.S. in Electrical Engineering from the University of Illinois in 1981. I received a B. Tech. in Electronics from the Indian Institute of Technology at Kharagpur in 1979.

4. I have more than 40 years of experience in the field of electrical engineering, including extensive experience in semiconductor development and fabrication including that of solar cells, passivation, and dielectric materials. For example, I am a named author on 24 publications and conference proceedings relating to solar cells, as can be seen from my CV, EX1004.

5. I am a Fellow of the Institute of Electrical and Electronics Engineers ("IEEE"), the American Physical Society ("APS"), and the American Association for the Advancement of Science ("AAAS"). I have served on numerous professional and government committees in the electrical engineering field, including chairing multiple IEEE committees, meetings, and programs, serving on Morgan & Claypool's editorial board, and serving as a member on the International Technology Roadmap for Semiconductors ("ITRS").

6. I have taught courses in Semiconductor Physics, Solid State Electronic Devices, and Microelectronic Device Fabrication at UT. In particular, I have taught an undergraduate course every year for 30 years on Semiconductor Devices out of a textbook, "Solid State Electronic Devices," by Ben Streetman and Sanjay Banerjee (ISBN 0-13-335603). Several of my lectures out of the textbook relate to solar cells. In addition, I have delivered many courses to industry professionals on Semiconductor Devices and Memory and Semiconductor

Processing. As a principal investigator, I have been the advisor to over 80 Doctoral and Masters students.

7. I am the co-author of several books and invited book chapters covering the area of electronic and semiconductor devices, including: Dopant Diffusion, Solid State Electronic Devices (three editions). I have authored or coauthored more than 1,000 papers and presentations in the areas of semiconductor devices and electronics development over the course of my career.

8. I have been the recipient of fifty grants to fund my research from a variety of funding agencies, including the National Science Foundation ("NSF"), DARPA, the Department of Energy, Semiconductor Research Corporation, the Department of Defense-Multidisciplinary University Research Initiative, and the Office of Naval Research. A number of the sponsored research grants on which I have been a principal or coinvestigator have related to solar cells and various deposition techniques for optoelectronic devices, including for example, "Optoelectronic Devices by Photo-enhanced Chemical Vapor Deposition," (National Science Foundation, August 1988-July 1993).

9. I have received numerous other awards recognizing my extensive work in the electrical engineering field. For example, I was on the Advisory Board, and the Silicon Solar Cell Thrust Lead for the Bay Area Photovoltaics

Consortium funded by the U.S. Department of Energy. This and other awards are described in more detail in my CV, submitted as EX1004.

### C. Compensation and Prior Testimony

10. I am being compensated at a rate of $650.00 per hour for my time spent on this matter. I am also being reimbursed for reasonable and customary expenses associated with my work in this matter. My compensation is not contingent on the outcome of this matter or the specifics of my testimony.

11. I have previously submitted declarations in multiple IPR proceedings and have also testified as an expert witness in Federal Court and the ITC, as summarized in EX1004 at 1.

### D. Information Considered

12. My opinions are based on my years of education, research and experience, as well as my investigation and study of relevant materials. In forming my opinions, I have considered the materials I identify in this declaration and those listed as exhibits in **Appendix B**, attached to this declaration.

13. I may rely upon these materials and/or additional materials to respond to arguments raised by the Patent Owner. I may also consider additional documents and information in forming any necessary opinions—including documents that may not yet have been provided to me.

14. My analysis of the materials produced in this investigation is ongoing and I will continue to review any new material as it is provided. This declaration represents only those opinions I have formed to date. I reserve the right to revise, supplement, and/or amend my opinions stated herein based on new information and on my continuing analysis of the materials already provided.

## II. LEGAL STANDARDS FOR PATENTABILITY

15. I am not a lawyer and am not providing any legal opinions. In providing my opinions in this declaration, I am relying upon certain basic legal principles that have been explained to me by counsel and which I am summarizing below.

16. First, I understand that for an invention claimed in a patent to be found patentable, it must be, among other things, new and not obvious from what was known before the invention was made.

17. I understand the information that is used to evaluate whether an invention is new and not obvious is generally referred to as "prior art" and generally includes patents and printed publications (*e.g.*, books, journal publications, articles on websites, product manuals, *etc*.).

18. I understand that in this proceeding the Petitioner has the burden of proving that the claims are anticipated by or obvious from the prior art by a

preponderance of the evidence. I understand that "a preponderance of the evidence" is evidence sufficient to show that a fact is more likely true than it is not.

19. I understand that in this proceeding, the claims should be given their ordinary and accustomed meaning as understood by one of ordinary skill in the art in view of the patent and its file history. The claims after being construed in this manner are then to be compared to the information in the prior art.

20. I understand that in this proceeding, the information that may be evaluated is limited to patents and printed publications. My analysis below compares the claims to patents and printed publications that are prior art to the claims.

21. I understand that there are various ways in which prior art may render a patent claim unpatentable based on prior art patents and printed publications. First, the prior art can be shown to "anticipate" the claim. Second, the prior art can be shown to have made the claim "obvious" to a person of ordinary skill in the art. My understanding of the legal standards is set forth below.

### A. <u>Anticipation</u>

22. I understand that the following standards govern the determination of whether a patent claim is "anticipated" by the prior art.

23. I have applied these standards in my evaluation of whether the claims would have been anticipated by the prior art.

24. I understand that the "prior art" includes patents and printed publications that existed before the earliest filing date (the "effective filing date") of the claim in the patent. I also understand that a patent will be prior art if it was filed before the effective filing date of the claimed invention, while a printed publication will be prior art if it was publicly available before that date.

25. I understand that, for a patent claim to be "anticipated" by the prior art, each and every requirement of the claim must be found, expressly or inherently, in a single prior art reference as recited in the claim. I understand that claim limitations that are not expressly described in a prior art reference may still be there if they are "inherent" to the thing or process being described in the prior art. I understand that a limitation can be "inherent" if that limitation is necessarily present in or the natural result of the elements explicitly disclosed by the prior art.

26. I understand that if a reference incorporates other documents by reference, the incorporating reference and the incorporated reference(s) should be treated as a single prior art reference for purposes of analyzing anticipation.

27. I understand that it is acceptable to consider evidence other than the information in a particular prior art document to determine if a feature is necessarily present in or inherently described by that reference.

**B. <u>Obviousness</u>**

28. I understand that a claimed invention is not patentable if it would have been obvious to a person of ordinary skill in the field of the invention at the time the invention was made.

29. I understand that the obviousness standard is defined in the patent statute (35 U.S.C. § 103(a)) as follows:

30. A patent may not be obtained though the invention is not identically disclosed or described if the differences between the subject matter sought to be patented and the prior art are such that the subject matter as a whole would have been obvious at the time the invention was made to a person having ordinary skill in the art to which said subject matter pertains. Patentability shall not be negatived by the manner in which the invention was made.

31. I understand that the following standards govern the determination of whether a claim in a patent is obvious. I have applied these standards in my evaluation of whether the claims would have been considered obvious as of the priority date of the patent.

32. I understand that to find a claim in a patent obvious, one must make certain findings regarding the claimed invention and the prior art. Specifically, I understand that the obviousness question requires consideration of four factors (although not necessarily in the following order):

- The scope and content of the prior art;
- The differences between the prior art and the claims at issue;
- The knowledge of a person of ordinary skill in the pertinent art; and
- Whatever objective factors indicating obviousness or non-obviousness may be present in any particular case.

33. In addition, I understand that the obviousness inquiry should not be done in hindsight, but must be done using the perspective of a person of ordinary skill in the relevant art as of the effective filing date of the patent claim.

34. I understand the objective factors indicating obviousness or non-obviousness may include: commercial success of products covered by the patent claims; a long-felt need for the invention; failed attempts by others to make the invention; copying of the invention by others in the field; unexpected results achieved by the invention; praise of the invention by those in the field; the taking of licenses under the patent by others; expressions of surprise by experts and those skilled in the art at the making of the invention; and the patentee proceeded contrary to the accepted wisdom of the prior art. I also understand that any of this evidence must be specifically connected to the invention rather than being associated with the prior art or with marketing or other efforts to promote an invention. I am not presently aware of any evidence of "objective factors" suggesting the claimed methods are not obvious, and reserve my right to address any such evidence if it is identified in the future.

35. I understand the combination of familiar elements according to known methods is likely to be obvious when it does no more than yield predictable results. I understand that when the prior art does not expressly disclose a claim limitation, inherency may also supply a missing claim limitation in an obviousness analysis. I understand that inherency is established in the context of obviousness when the limitation at issue necessarily must be present, or the natural result of the combination of elements explicitly disclosed by the prior art. I also understand that an example of a solution in one field of endeavor may make that solution obvious in another related field. I also understand that market demands or design considerations may prompt variations of a prior art system or process, either in the same field or a different one, and that these variations will ordinarily be considered obvious variations of what has been described in the prior art.

36. I also understand that if a person of ordinary skill can implement a predictable variation, that variation would have been considered obvious. I understand that for similar reasons, if a technique has been used to improve one device, and a person of ordinary skill in the art would recognize that it would improve similar devices in the same way, using that technique to improve the other device would have been obvious unless its actual application yields unexpected results or challenges in implementation.

37. I understand that the obviousness analysis need not seek out precise teachings directed to the specific subject matter of the challenged claim, but instead can take account of the "ordinary innovation" and experimentation that does no more than yield predictable results, which are inferences and creative steps that a person of ordinary skill in the art would employ.

38. I understand that sometimes it will be necessary to look to interrelated teachings of multiple patents/publications; the effects of demands known to the design community or present in the marketplace; and the background knowledge possessed by a person having ordinary skill in the art. I understand that all these issues may be considered to determine whether there was an apparent reason to combine the known elements in the fashion claimed by the patent at issue.

39. I understand that the obviousness analysis cannot be confined by a formalistic conception of the words "teaching, suggestion, and motivation." I understand that in 2007, the Supreme Court issued its decision in *KSR Int'l Co. v. Teleflex, Inc.,* 550 U.S. 398, 418 (2007), where the Court rejected the previous requirement of a "teaching, suggestion, or motivation to combine" known elements of prior art for purposes of an obviousness analysis as a precondition for finding obviousness. It is my understanding that *KSR* confirms that any motivation that would have been known to a person of skill in the art, including common sense, or

derived from the nature of the problem to be solved, is sufficient to explain why references would have been combined.

40. I understand that a person of ordinary skill attempting to solve a problem will not be led only to those elements of prior art designed to solve the same problem. I understand that under the *KSR* standard, steps suggested by common sense are important and should be considered. Common sense teaches that familiar items may have obvious uses beyond the particular application being described in a reference, that if something can be done once it is obvious to do it multiple times, and in many cases a person of ordinary skill will be able to fit the teachings of multiple patents/publications together like pieces of a puzzle. As such, the prior art considered can be directed to any need or problem known in the field of endeavor and can provide a reason for combining the elements of the prior art in the manner claimed. In other words, the prior art does not need to be directed towards solving the same problem that is addressed in the patent. Further, the individual prior art references themselves need not all be directed towards solving the same problem.

41. I understand that obviousness does not require that the features of a secondary reference be bodily incorporated into the structure of the primary reference. Rather, the test is what the combined teachings of those references would have suggested to a Skilled Artisan. The disclosures of the prior art

references need not be physically combinable. Combining the teachings of references should be the focus of the analysis.

42. I understand that an invention that might be considered an obvious variation or modification of the prior art may be considered non-obvious if one or more prior art references discourages or leads away from the line of inquiry disclosed in the reference(s). A reference does not "teach away" from an invention simply because the reference suggests that another embodiment of the invention is better or preferred. My understanding of the doctrine of teaching away requires a clear indication that the combination should not be attempted (*e.g.*, because it would not work or explicit statements saying the combination should not be made).

43. I understand that a person of ordinary skill is also a person of ordinary creativity.

44. I further understand that in many fields, it may be that there is little discussion of obvious techniques or combination, and it often may be the case that market demand, rather than scientific literature or knowledge, will drive design trends. When there is such a design need or market pressure to solve a problem and there are a finite number of identified, predictable solutions, a person of ordinary skill has good reason to pursue the known options within their technical grasp. If this leads to the anticipated success, it is likely the product not of innovation but of ordinary skill and common sense. In that instance the fact that a

combination was obvious to try might show that it was obvious. The fact that a particular combination of prior art elements was "obvious to try" may indicate that the combination was obvious even if no one attempted the combination. If the combination was obvious to try (regardless of whether it was actually tried) or leads to anticipated success, then it is likely the result of ordinary skill and common sense rather than innovation.

## III. THE 516 PATENT

### A. The Person Of Ordinary Skill in the Art

45. I have reviewed the 516 Patent specification and its claims. Based on my experience in the field and the information disclosed in the 516 Patent that I discuss in this Declaration, I believe the person of ordinary skill in the art in the 516 Patent's field of solar cell design or manufacture in 2008 ("Skilled Artisan") would have been someone with an advanced degree in electrical engineering, applied physics, chemistry, or materials science, and at least two years of experience designing, developing, or researching in the field. Alternatively, that person would have had a bachelor's degree in electrical engineering, applied physics, or materials science, and at least three years of experience designing, developing, or researching in the field.

46. I was a Skilled Artisan before February 20, 2008 by this definition.

### B. The 516 Patent's Effective Filing Date

47. The 516 Patent, titled "Front Contact Solar Cell with Formed Emitter, was filed on February 20, 2008. EX1001. Based on the information on the face of the 516 Patent, it does not claim priority to any earlier application. I understand from counsel for CSI that the 516 Patent's effective filing date is February 20, 2008.

### C. The 516 Patent's Specification

48. The 516 Patent discloses a solar cell as shown in Figure 1.

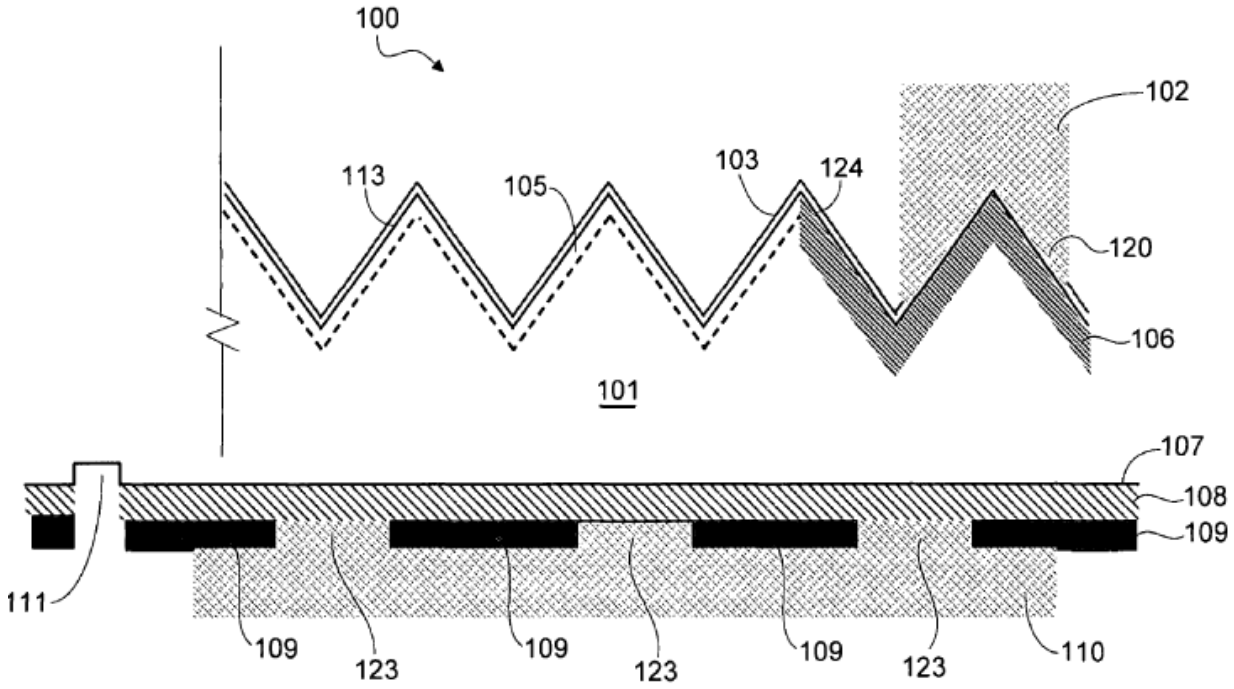


FIG. 1

49. Figure 1's solar cell 100 includes an N-type substrate 101. EX1001, 2:28-31. According to the 516 Patent, a "backside junction" is formed by the N-type substrate 101 and the P-type doped polysilicon emitter 108 formed at the solar

cell's backside. EX1001, 2:28-30, 1:46-48. Between the polysilicon emitter 108 and the substrate 101 is a tunnel oxide layer 107, which "may comprise silicon oxide thermally grown" on the substrate's surface. EX1001, 2:57-66. Backside metal contact 110 connects with the emitter 108 through contact holes 123 in the silicon dioxide layer 109. EX1001, 2:66-3:2.

50. At the front, the solar cell's front side has a texture 113 and an antireflective coating 103 made of silicon nitride. EX1001, 2:22-27, 3:11-21, 4:28-33. Metal contact 102 at the front then connects with the substrate through holes in the antireflective coating 103. EX1001, 2:50-53.

### D. The 516 Patent's Claims

51. I understand that the Petitioner is challenging Claims 9-12 of the 516 Patent. These claims are reproduced below:

| Claim Element | Claim Language |
|---|---|
| [9.a] | A solar cell having a front side facing the sun to collect solar radiation during normal operation and a backside opposite the front side, the solar cell comprising: |
| [9.b] | a substrate having a textured front surface; |
| [9.c] | an emitter layer formed over a back surface of the substrate, the emitter layer forming a backside junction with the substrate; |
| [9.d] | an oxide layer formed between the back surface of the substrate and the emitter layer; |

| | |
|---|---|
| [9.e] | a first metal contact making an electrical connection to the substrate on the front side of the solar cell; and |
| [9.f] | a second metal contact making an electrical connection to the emitter layer on the backside of the solar cell, |
| [9.g] | the first metal contact and the second metal contact being configured to allow an external electrical circuit to be powered by the solar cell. |
| [10] | 10. The solar cell of claim 9 further comprising an antireflective layer over the textured front surface of the substrate. |
| [11] | 11. The solar cell of claim 9 wherein the substrate comprises an N-type silicon substrate and the emitter layer comprises a P-type doped polysilicon. |
| [12] | 12. The solar cell of claim 9 wherein the second metal contact comprises silver formed over a layer of silicon dioxide. |

### E. **The 516 Patent's Prosecution History**

52. I have also reviewed the prosecution history of the 516 Patent to understand what the Examiner has considered during prosecution and the reasons for why the claims were allowed. I recite below a summary of the prosecution history of the 516 Patent.

53. Issued Claim 9 of the 516 Patent was numbered application claim 17 during prosecution. The original claim 9 (application claim 17) recited all elements in issued claim 9 except for "an oxide layer formed between the backside of the substrate and the emitter layer." EX1002, 19. The Examiner initially

rejected this original claim and found that back junction solar cells formed with a substrate and an oppositely doped emitter layer were already known in the prior art. Specifically, the Examiner found that Meier (US6,262,359) disclosed a solar cell with an n-type substrate and a p-type emitter layer forming a backside junction with the substrate, and metal contacts on the front and back of the solar cell to electrically connect with the substrate from the front and with the emitter layer from the back. EX1002, 76-78. The Examiner noted that Meier did not disclose texturing the solar cells' front side (as in application claim 18) or that the emitter layer was polysilicon (as in application claim 19). *Id*. Rather, Meier disclosed that the substrate was "single crystal" silicon. EX1011 at 5:31-42.

54. In rejecting the claims for obviousness, the Examiner combined Meier with Jordan (US2005/0268963, EX1015), which disclosed a solar cell with a textured front surface and a polycrystalline silicon wafer that formed the emitter layer.

55. To overcome this rejection, I understand that the Applicant's attorney amended the claims to recite "an oxide layer formed between the back surface of the substrate and the emitter layer." EX1002, 135. The Applicant's attorney argued that because the emitter layer in both Meier and Jordan were *diffused* emitters, they "were formed within the silicon substrate." EX1002, 139. Thus,

according to the Applicant's attorney, they allegedly could not have an oxide layer in between. *Id.*

56. Based on these arguments and amendment, the Examiner allowed the amended claims 17-20 in the application and these claims issued as claims 9-12 of the 516 Patent. The Notice of Allowance explained the reason for allowance as follows:

> The prior art of record lacks an oxide layer formed between an emitter and an oppositely doped substrate and a metal contact making an electrical connection to the substrate on the front light incident side of the solar cell.

EX1002, 152.

### F. <u>Known Technologies That The Examiner Did Not Consider</u>

57. While the Examiner of 516 Patent considered some prior art during prosecution, I do not believe that the Examiner had before him key pieces of prior art relevant to the 516 Patent, specifically with respect to polysilicon emitters and associated oxide layer. I discussed these prior art references below.

58. Before the 516 Patent, those in the field already recognized that replacing diffused emitters with deposited polysilicon emitters would improve both bipolar transistors and solar cell performance. Deposited polysilicon emitters with an interfacial oxide layer were first used to improve the performance of bipolar transistors in 1984. EX1023 (Ashburn 1984). "Interfacial oxide layer" refers to a layer of silicon dioxide between the substrate and polysilicon emitter.

59. Around the same time, a number of publications suggested that this improvement with polysilicon emitter can be achieved in solar cells as well. For example, Yablonovitch et al. published a paper in 1985 titled "A Study of n+-SIPOS:p-Si Heterojunction Emitters," in which the authors wrote:

> *There have been a considerable number of reports recently on improved bipolar transistor emitters made of polycrystalline silicon or of SIPOS (a mixture of microcrystalline silicon and silicon dioxide).* The improvement has come in the forward saturation current Jo, defined by J = Jo exp (qV/kT). For example, we have recently made SIPOS heterojunction emitters with Jo = 10 – l4 Amps/cm2 which is about two orders of magnitude smaller than in a conventional homojunction emitter…. ***Such heterojunctions are valuable not only for emitter efficiency in bipolar transistors, but also for solar cells.***

EX1016, 597 (emphasis added).

60. Likewise in around 1984, Kwark et al. published a paper titled "SIPOS Heterojunction Contacts to Silicon," in which the authors wrote: "Incorporation of these films into the emitter structure of an NPN bipolar transistor had been found to reduce the emitter saturation current fifty fold; this translates into potential improvements of energy conversion efficiency for solar cells." EX1008, 742. Notably, Kwark et. al. did not just report on work with SIPOS, but

the authors also reported "surprising" "good results" with pure polysilicon emitters, which they referred to as "POLY." EX1008, 742.

61. Subsequently in 1987, Sinton and Swanson published a paper titled "Design Criteria for Si Point-Contact Concentrator Solar Cells, where they noted that "[i]t is interesting to project what should be possible if the best available emitter technology were applied to point contact cells rather than the diffused emitters from the current process." EX1017, 2122. Sinton and Swanson modeled the projected efficiencies of what would be possible incorporating "SIPOS" emitters versus diffused emitters, and showed a more than one percent absolute increase in efficiency for the solar cell. EX1017, 2122. This is shown in Figure 9 of the paper and reproduced below:

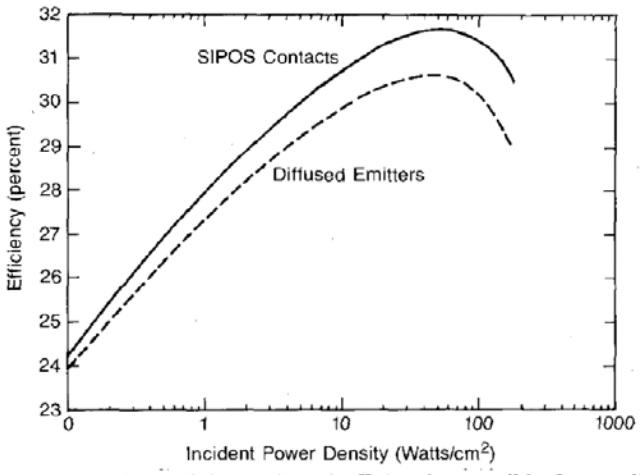


Fig. 9. A comparison of the projected efficiencies possible for a cell incorporating SIPOS emitters (solid curve), compared to projections for diffused emitters as used to date (dashed curve).

62. "SIPOS" refers to "semi-insulating polysilicon" which is formed by introducing a small amount of oxygen bearing species into the chemical vapor

deposition of polysilicon. EX1008, 84. But as Kwark et. al. found in around 1984, even a pure polysilicon emitter layer with a chemically formed interfacial oxide layer led to "surprising" improvement. EX1008, 84. Following these suggestions, Gan and Swanson examined the use of deposited polysilicon emitters with an interfacial oxide layer in concentrator solar cells in 1990 and reported in their published paper, titled "Polysilicon Emitters for Silicon Concentrator Solar Cells," that the "cell performance can be improved if the diffused-emitter is replaced with the polysilicon emitter." EX1007, 245. Gan and Swanson also pointed to Sinton's earlier modeling showing one percent absolute increase in solar cell efficiency for a "backside contact solar cells." EX1007, 249. Backside contact solar cells or back contact solar cells have their PN junction on the back of the solar cells, instead of the front as in a conventional solar cell.

63. A month before the 516 Patent filing, Peter Borden from Applied Materials filed a provisional application, titled "Improved HIT Solar Cell Structure," in which he disclosed in the Abstract:

> The present invention relates to improved HIT type or polysilicon emitter solar cells. According to certain aspects, the invention includes ***forming a masking oxide layer on the front and back of the cell*** and then patterning holes in the masking oxide. A HIT cell structure or ***polysilicon emitter solar cell structure is then formed over the patterned oxide***,…. Benefits of the invention include that it provides a

> controlled interface for the HIT cell through insertion of a thin tunnel oxide. Moreover, the tunnel oxide prevents epitaxial growth of amorphous silicon, allowing it to remain amorphous for the optimum band structure. Still further, it provides a layer to protect the surface from plasma damage during deposition of the a-Si layer. Further, it may be used in conjunction with a point contact structure to further increase efficiency. EX1010, Abstract.

64. The same Abstract disclosure also appears in the PCT Publication filed by Borden about a year later. EX1009, Abstract.

65. None of these prior art references that I discussed above were before the 516 Patent Examiner.

### G. PTAB's Unpatentability Decisions in Two Continuation Applications

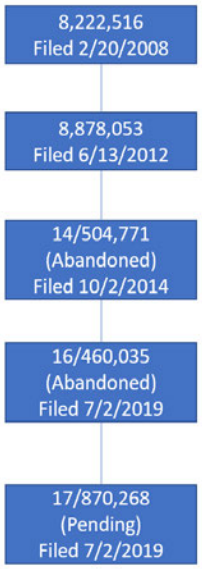


66. I understand that after the 516 Patent, there were a series of applications filed that claimed priority to the 516 Patent. I have also reviewed two of these continuation applications filed in the same family as the 516 Patent issued. These two applications that I reviewed are U.S. Application No. 14/504,771 ("771 Application") and 16/460,035 ("035 Application"). I have also reviewed their prosecution histories.

67. Based on my review, I believe that the 771 Application and the 035 Application presented claims that were substantially similar to the 516 Patent's Claims 9-11, as seen in the **Appendix A.**

68. In the 771 Application, I understand that the Examiner discovered polysilicon emitter and intervening oxide layer prior art references that he did not have when examining the 516 Patent. Based on the newly discovered prior art, the Examiner rejected the 771 Applications claims as obvious based on the combinations of (1) Meier in view of Okayasu, Borden, and Wenham and (2) Meier in view of Okayasu, Foglietti, Gan, and Wenham. EX1005, 447-455 (Final Office Action).

69. I understand that the Applicant appealed the rejections to the PTAB (EX1005, 458-499), which affirmed the rejections (EX1005, 507-520).

70. In the subsequent 035 Application, the Examiner again rejected as obvious the claims presented that I believed are substantially similar to the 516 Patent claims based on Meier in view of Okayasu, Borden, Wenham, Jordan, and Xi. EX1018, 208-223. Maxeon again appealed the rejection, which the PTAB again affirmed. EX1018, 227-270, 286-293.

71. I understand that Maxeon *did not* appeal either of the PTAB's decisions to the Federal Circuit and notices of abandonment were issued by the US Patent Office. EX1005, 522; EX1018, 295.

72. I will discuss the prior art Meier, Okayasu, Borden, Foglietti, Gan, and Jordan below in conjunction to my opinions that the Claims 9-11 of the 516 Patent would have been rendered obvious by these references.

### H. Claim Construction

73. For purposes of my opinions, I applied each claim term's ordinary and customary meaning to the Skilled Artisan read in light of the specification and prosecution history.

## IV. CLAIMS 9-11 ARE UNPATENTABLE OVER MEIER, OKAYASU, BORDEN, AND JORDAN

74. In my opinion, the combination of Meier (US6,262,359) in view of Okayasu (JP07-106611), Borden (WO2009/094578) and Jordan (US2005/0268963) would have rendered Claims 9-11 obvious.

### A. Prior Art Status

75. I understand from counsel for CSI that Meier (EX1011), Okayasu (EX1012-1013), Jordan (EX1015), and Borden (EX1009) each qualifies as prior art, and I have been asked to assume them to be so.

76. With respect to Borden (EX1009), I was also asked by counsel for CSI to review the U.S. Provisional Patent Application No. 61/023,342 (EX1010) ("Borden Provisional") in addition to the corresponding PCT Application by Borden (WO2009/094578) and to determine whether claim 1 of the Borden PCT is supported by the disclosure in the Borden Provisional. Based on my review, my

opinion is that claim 1 of the Borden PCT is supported by the Borden Provisional. I provide a table below to show the specific descriptions from the Borden Provisional that support claim 1 of the Borden PCT.

| **Borden PCT (EX1009) Claim 1** | **Borden Provisional EX1010** |
|---|---|
| 1. A solar cell comprising: | ¶1, claim 1 ("A solar cell …") |
| an amorphous semiconductor layer formed over a substrate; | ¶¶14-16, claim 1 ("A solar cell including a passivation structure consisting of a tunnel dielectric interposed between a substrate and a layer of an amorphous semiconductor"), Figs. 1-3 |
| a dielectric layer interposed between the substrate and the amorphous semiconductor layer, wherein the dielectric layer is sufficiently thin so as to support a tunneling current therethrough. | ¶14 ("The dielectric layer should be thin, on the order of 8-10A, in order to support a tunneling current."), ¶16 ("In another embodiment, the oxide is formed on both front and back at the same time. Next, the a-Si layers are deposited on the front surface."); claim 1 ("a tunnel dielectric interposed between a substrate and a layer of an amorphous semiconductor"), Figs. 1-3 |

77. The Borden Provisional also supports each disclosure of Borden cited in this Declaration.

| **Borden EX1009 Citation in Petition** | **Borden Provisional EX1010 Disclosure** |
|---|---|
| Abstract | Abstract |
| ¶8 | ¶6 |
| ¶16 | ¶13 |

| Borden EX1009 Citation in Petition | Borden Provisional EX1010 Disclosure |
|---|---|
| ¶24 | ¶16 |
| Figure 1A | Figure 1 |

**B. <u>Meier (EX1011)</u>**

78. Meier is titled "Aluminum Alloy Back Junction Solar Cell and Process for Fabrication Thereof." EX1011. Meier disclosed a "Back Junction Solar Cell" having an n-type substrate (218), as exemplified in FIG. 3D reproduced below. EX1011, Title and FIG. 3D. In a back junction solar cell, the p-n junction is placed at the back side of the solar cell. EX1011, 4:59-60. Specifically, the substrate 218 of Meier's solar cell is doped with "n-type conductivity," *i.e.*, n-type dopants. EX1011, 5:31-35. A "p+ layer 220" is then formed on the backside of the n-type substrate. EX1011, 6:25-7:3. This p+ layer is also shown in FIG. 2 as 120, which is the same layer as 220 in FIG. 3D. EX1011, 4:49-56.

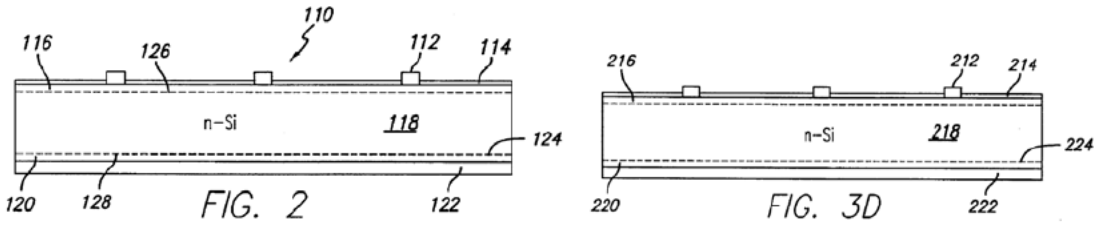


This "p+ layer" 220 or 120 "functions as a p+ emitter layer in the solar cell layer stack." EX1011, 4:49-52. Because the dopant type of the "n-type" substrate 218 is

opposite that of the "p+ layer," the p+ layer 120 or 220 in Meier forms a backside junction (*i.e.*, PN junction) with the n-type doped silicon substrate. This understanding was similarly expressed by the Applicant during prosecution of the 771 Application, in which the Applicant said in his Appeal Brief: "Meier discloses forming a p+ layer 220 that forms a backside junction with the n-Si base layer 218." EX1005, 316 (771 Appeal Brief), EX1011, 6:51-55. In Meier's cell, the p+ layer 120 or 220 is doped with aluminum, a p-type dopant.

79. At the front side of the solar cell, Meier also disclosed coating the front surface with an anti-reflective layer 214. EX1011, 6:20-25. Front and back metal contacts 212 and 222 are also formed, as shown in FIG. 3D. EX1011, 7:10-35.

### C. <u>Okayasu (EX1012)</u>

80. Okayasu is titled "Method of Manufacturing BSF Solar Cell." Okayasu disclosed that in conventional solar cells, the p+ layer "has conventionally been formed by the 'thermal diffusion method" where the silicon substrate "was introduced into a reaction chamber filled with p-type dopant gas containing B (boron) or the like, and this dopant gas was thermally diffused and formed into the silicon substrate under high temperature conditions of around 1000$^{o}$C or a p-type dopant layer of Al (aluminum) or the like was stacked on the single-crystal silicon substrate surface under high temperature conditions of around

1000°C." EX1012, ¶005 (pp. 3-4). However, when formed by this method, Okayasu stated that it is difficult to control the thickness of the diffused layer and exposure to high temperature may cause thermal degradation. *Id*. ¶¶006-007. Okayasu proposed instead a manufacturing method for "BSF type solar cell," as shown in FIG. 1, in which polysilicon layers 2 and 5 are deposited by chemical vapor deposition (CVD) on both sides of the silicon substrate 1. EX1012, ¶¶44, 46-48 (pp. 7-8). *See also*, *id.*, ¶8. At the front, "a p-type … polysilicon layer 2 provided on the light incident side of this silicon substrate 1" "form[s] a p-n

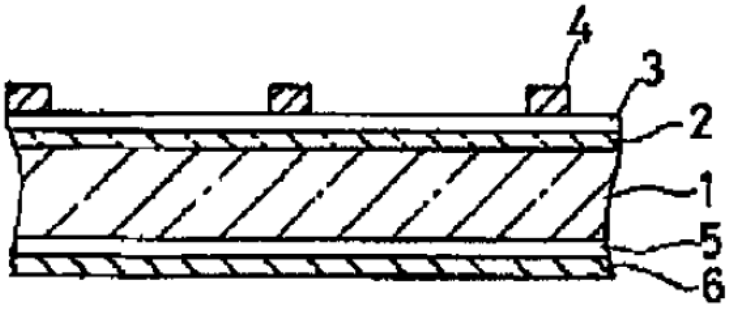


junction with the [n-type] silicon substrate 1." EX1012, ¶44, Fig 1.

As shown in FIG. 1, an anti-reflective layer 3 and a comb-shaped metal electrode 4 are also formed over the polysilicon layer 2 on the front side. EX1012, ¶44. At the backside, a polysilicon layer 5 is also formed and doped with an n-type dopant. and a backside aluminum electrode 6 is also formed over the polysilicon layer 5. EX1012, ¶44 (page 7).

81. Okayasu disclosed that compared with conventional solar cells, manufacturing the solar cell with doped polysilicon layers using the plasma CVD method "has the advantage of improving the photoelectric conversion efficiency because the thermal conditions during the formation of the n+ or p+ silicon layer are relaxed compared to the conventional diffusion method, so degradation of the silicon substrate does not easily occur." EX1012, ¶8 (p. 4). Additionally, Okayasu also pointed out that "this method has the advantage of improving the photoelectric conversion efficiency because the thickness of the n+ silicon layer or p+ silicon layer can be reduced to a few tens of angstroms to a few hundred angstroms." EX1012, ¶8. That is, a solar cell with a doped polysilicon layer over the substrate allows for finer control of the thickness, for example, of the doped emitter layer of the solar cell.

**D. <u>Borden (EX1009)</u>**

82. Borden is titled "Improved HIT Solar Cell Structure" and relates to an "improved HIT type or ***polysilicon emitter*** solar cells." EX1009, Abstract (emphasis added). Borden disclosed "forming a masking oxide layer on the front and back of the cell and then patterning holes in the masking oxide." *Id*. Afterwards, a "HIT type cell structure or a polysilicon emitter solar cell structure is then formed over the patterned oxide …." *Id*. Borden taught several advantages of the tunnel oxide layer, including "prevent[ing] epitaxial growth of amorphous

silicon," "provid[ing] a layer to protect the surface from plasma damage," and "may be used in conjunction with a point contact structure to further increase efficiency." *Id*. Thus, Borden disclosed that "the present inventors recognize that thin tunnel oxide layers can be used for solar cells" and "that tunnel oxides can be used between a heavily doped or insulating layer of polysilicon and a crystal silicon substrate, forming a polysilicon emitter solar cell." EX1009, ¶16.

**E. <u>Jordan (EX1015)</u>**

83. Jordan is titled "Process for Manufacturing Photovoltaic Cells," *i.e.*, solar cells. Specifically, Jordan is used here to supply the element of a textured front surface of the solar cell, just as the Examiner in the 516 Patent used to combine with Meier during prosecution and also in the rejection of the 035 Application claims. Texturing the front surface of a solar cell substrate was well-known in the solar cell art for reducing reflection. For example, Jordan disclosed that the "wafer surface, prior to the n-doping to form the emitter layer, can be textured." EX1015, ¶7. Jordan further disclosed:

> The front surface of the wafer doped with the first dopant is preferably textured. ***Texturing generally increases the efficiency of the resulting photovoltaic cell by increasing light absorption***. For example, the wafer can be suitably textured using chemical etching, plasma etching or mechanical scribing. The textured wafer is typically subsequently cleaned, for example, by immersion in hydrofluoric acid and then

> hydrochloric acid with intermediate and final rinsing in de-ionized water, followed by drying. The optional texturing step is preferably done prior to the formation of the emitter layer as described below.

EX1015, ¶22. As another example, Chapter 7 of a 2002 Handbook of Photovoltaics disclosed the following section on texturing of solar cells:

> **7.3.6.2 Texturing**
>
> Alkaline (KOH or NaOH-based) solutions etch anisotropically a Si crystal exposing {1 1 1} planes on which the etching rate is lowest. On [1 0 0]–oriented wafers, randomly distributed, square-base pyramids are formed, whose size is adjusted to a few microns by controlling etching time and temperature. ***In a textured face, a ray can be reflected toward a neighboring pyramid (Figure 7.5a) and hence absorption is enhanced***. Though calculation of reflection requires ray tracing, a rough estimate of near-normal incidence can be derived, by assuming that each ray strikes twice the Si surface so that reflection is the square of the untextured case.
>
> ***Texturing is incorporated into both industrial and laboratory Si solar cells, and, in combination with antireflection (AR) coating, reduces reflection losses to a few percent***. In the latter case, in order to better control the pyramid geometry and to allow delineation of fine features on the surface, photolithographic techniques are used to define inverted or upright pyramids at the

> desired positions. It has to be noted that in this case the reflectivity is similar to that of a random texture [64].
>
> Light entering the substrate at a textured surface is tilted with respect to the cell normal. 'I'his means that photogeneration takes place closer to the collection junction, which is very beneficial for low-diffusion length cells, by enhancing the collection efficiency of medium- to-long wavelengths (Figure 7.5a). The effect is equivalent to an increase of the absorption coefficient. As a drawback, textured surfaces present higher SRVs.

EX1019 (Luque), 269.

### F. <u>The Combination of Meier, Okayasu, Borden, and Jordan</u>

84. During the 516 Patent prosecution, the only elements that the Examiner found lacking in the prior art combination of Meier and Jordan were (1) an oxide layer in between the emitter and the substrate and (2) that the emitter was polysilicon. EX1002, 135, 139, 152. However, Okayasu disclosed replacing in-substrate diffused emitters with deposited polysilicon emitters, and Borden disclosed adding a tunnel oxide layer in between the polysilicon emitter and substrate because of the various benefits the tunnel oxide layer confers.

85. Thus, in my opinion, it would have been obvious to a Skilled Artisan to modify Meier's back emitter, back junction solar cell by (1) replacing the p-type diffused in-substrate emitter with a p-type deposited *polysilicon* emitter as taught by Okayasu; (2) placing an interfacial oxide layer between the emitter and the

substrate, as taught by Borden; and (3) texturing the front substrate as taught by Jordan.

### 1. Modifying Meier with Polysilicon Emitter and Oxide Layer

86. In my opinion, by 2008, the Skilled Artisan would have been motivated to modify the diffused emitter of Meier's back junction solar cells to be a polysilicon emitter as taught by Okayasu, because as Okayasu disclosed, doing so "has the advantage of improving the photoelectric conversion efficiency because the thermal conditions during the formation of the n+ or p+ silicon layer are relaxed compared to the conventional diffusion method, so degradation of the silicon substrate does not easily occur." EX1012, ¶8. Additionally, Okayasu also pointed out that doing so would allow for finer control of the thickness of the emitter layer, as I discussed above in ¶81. EX1012, ¶8.

87. Replacing the backside p+ emitter layer of Meier with a polysilicon emitter, as deposited by the CVD method taught by Okayasu, would have been well within the level of ordinary skill of the Skilled Art in 2008. It would have been simple substitution of one known element for another to obtain predictable results. Okayasu provided detailed conditions for how this CVD deposition of the polysilicon should occur, and would constitute applying a known technique to a known device ready for improvement to yield predictable results. EX1012, ¶47-48 (pp. 7-8).

88. In my opinion, by 2008, the Skilled Artisan would have been further motivated to include a tunnel oxide layer between the polysilicon layer and substrate of the back junction solar cell of Meier, as modified by Okayasu's polysilicon layer, because Borden taught the benefits of including such a tunnel oxide layer, as I discussed in ¶82 above. Specifically, Borden taught several advantages of the tunnel oxide layer, including "prevent[ing] epitaxial growth of amorphous silicon," "provid[ing] a layer to protect the surface from plasma damage," and "may be used in conjunction with a point contact structure to further increase efficiency." EX1009, Abstract.

89. Including this tunnel oxide layer between the backside polysilicon emitter and the substrate of a solar cell that has been modified in accordance with the combination of Meier and Okayasu would also have been well within the level of ordinary skill of the Skilled Art in 2008. For example, Borden taught that the tunnel oxide can be formed first on the silicon substrate, by a "rapid thermal oxide process" to form a "thin tunnel oxide, typically 12A thick." EX1009, ¶24; EX1010, ¶16 . Forming such oxide layer by heating silicon in the presence of oxygen was well known in the solar cell industry long before 2008. For example, Gan taught the step of "thin thermal oxide growth at 800$^{o}$C (10-minute oxygen flow)." EX1007, 246. Indeed, citing many prior papers, the 1990 Gan and Swanson publication I referenced above in ¶62 and discussed further in ¶¶128-129

below, said that "[i]t was found that, between the polysilicon and the substrate, there always exists a very thin oxide (interfacial oxide), which can be as a by-product of the cleaning process or is grown intentionally." EX1007, 245.

90. I understand that the PTAB in the 771 Application appeal proceeding agreed with the Examiner that the combination of Meier, Okayasu, and Borden would have been obvious, which confirmed my opinion.

91. In the 771 Application appeal proceeding, I understand that the PTAB affirmed the Examiner's finding "that Okayasu discloses an alternative method for forming a doped emitter or a surface field on a doped substrate." EX1005, 512.

92. I understand that the PTAB also affirmed the Examiner's motivation finding "that Okayasu teaches that its method of depositing doped polysilicon layers is preferable to that of thermal diffusion (as taught in Meier) because it can be performed at lower temperatures, preventing damage to the substrate, and allows more accurate control of the emitter thickness." *Id.*; *see also* EX1005 at 479-81.

93. I also understand that the PTAB affirmed the Examiner's finding that although "Meier as modified by Okayasu does not disclose a tunneling dielectric oxide between the emitter/front surface field and the substrate," "Borden discloses that tunnel oxides can be used in solar cells between doped polysilicon and

monocrystalline substrates on both front and back surfaces of the monocrystalline substrate." EX1005, 513.

94. I understand that the PTAB also affirmed the Examiner's conclusion that "it would have been obvious to the skilled artisan to modify the interface between polycrystalline layers and a monocrystalline substrate front and back surface by having a tunneling oxide at the interfaces for the benefits expressed by Borden." EX1005, 513.

95. Based on my own analysis of the references, in my opinion, the conclusion of the Examiner and the PTAB was correct.

**2. Modifying Meier with Textured Front Surface**

96. In my opinion, by 2008, the Skilled Artisan would also have been motivated to incorporate a textured front surface to a solar cell having a backside polysilicon emitter solar cell with an interfacial oxide layer, as modified by the combination of the Meier, Okayasu, and Borden. This textured front surface of the solar cell and its benefits would have been taught, for example, by Jordan, as I discussed in ¶83 above. Jordan disclosed a solar cell where the front surface of the substrate is "preferably textured" because "[t]exturing generally increases the efficiency of the resulting photovoltaic cell by increasing light absorption." EX1015, ¶22. Texturing the front surface of the solar cell to reduce the light reflection and increase light absorption and solar cell efficiency was well known in

the solar cell art long before 2008. EX1019 (Luque), 269. And the techniques for texturing the front surface were also well known and well within the level of the Skilled Artisan. *Id*.

97. My opinion on the obviousness of texturing the front surface of a solar cell is further confirmed by the Examiner's findings during the prosecution of the 516 Patent and the 035 Application proceeding, who also found that the Skilled Artisan would have been motivated to modify Meier's solar cell with a textured front surface in view of Jordan, because texturing increases light absorption and thus solar cell efficiency. EX1018, 76; EX1002, 77. I also understand that the PTAB affirmed the Examiner's obviousness rejection in the 035 Application proceeding, which further confirmed my opinion.

### G. <u>Meier, Okayasu, Borden, and Jordan Met All Claim Elements</u>

98. I will now discuss how the combination of the Meier, Okayasu, Borden, and Jordan references disclosed each and every element of Claims 9-11 of the 516 Patent.

#### 1. Preamble

99. Claim 9 is an independent claim and its preamble recites *"[a] solar cell having a front side facing the sun to collect solar radiation during normal operation and a backside opposite the front side, the solar cell comprising*."

100. All the references relied on here disclosed "a solar cell having a front side facing the sun to collect solar radiation during normal operation and a backside opposite the front side," as recited in the preamble of Claim 9. For example, referring to FIG. 2 of Meier, it disclosed a "[s]olar cell layer stack 110 includes a base layer 118 of n-type conductivity, which is defined by an **illuminated surface (front** or top surface**)** 126 and a **non-illuminated** surface (**back** or bottom surface) 128."). EX1011, 4:35-39. FIG. 2 shows the identical structure as FIG. 3D, except for its numerical labels. The "illuminated" side of a solar cell corresponds to the "front side" that faces the sun to collect solar radiation during normal operation, and the "non-illuminated" side corresponds to the back side opposite the front side.

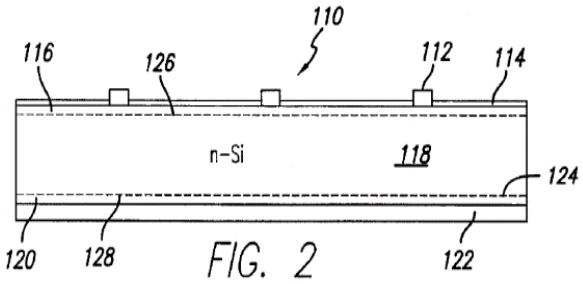

FIG. 2

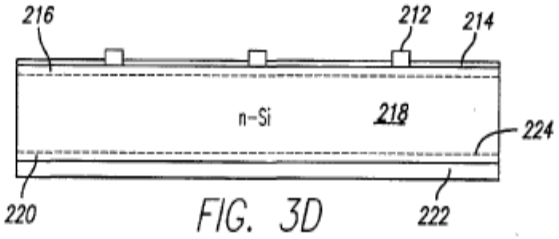

FIG. 3D

101. Okayasu likewise disclosed a solar cell with front side which would face the sun during normal operation and an opposite backside. EX1012, ¶44 (p. 7), Fig. 1 (p. 11).

[FIG. 1]

1: n⁻ single crystal silicon substrate
2: p-type polysilicon layer
5: n⁺ polysilicon layer

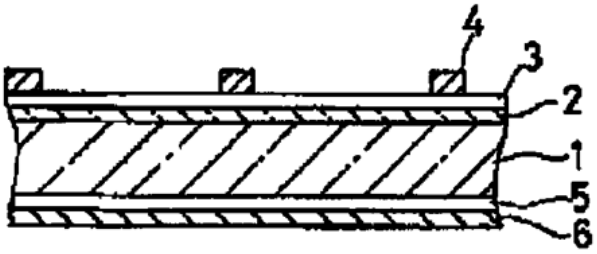


102. Borden similarly disclosed a solar cell with front and back sides. EX1009, Abstract, FIG. 1A; EX1010, Abstract, FIG. 1. Like Jordan, the front side of the Borden solar cell is textured, as seen from the jagged surface of the topside of FIG 1A below.

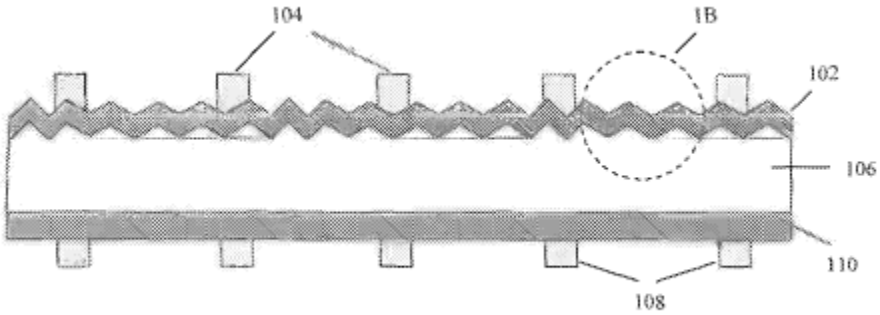


FIG. 1A

103. Jordan also disclosed a solar cell with front and back sides. Jordan disclosed that the "front surface of the substrate" is textured (EX1015, ¶22) and that "the surface of the wafer intended to face incident light when the wafer is

formed into a photovoltaic cell is referred to herein as the front face or front surface" (EX1015, ¶6).

**2. [9a] Substrate with a textured front surface**

104. Claim 9 next requires "*a substrate having a textured front surface*."

105. All relied upon references disclosed solar cells having "a substrate." In Meier, the substrate is the "n-Si base layer 118" or "218" in FIGS. 2 and 3D. EX1011, 4:27-52, 5:31-49. In Okayasu, the substrate is also an n-type silicon substrate identified as 1 in FIG. 1. EX1012 (Okayasu), ¶44, Fig. 1. The substrate in Borden is identified as 106 in FIG. 1A, and in Jordan, it is identified as the "wafer" that is textured on the front surface. EX1015 (Jordan), ¶22; EX1009 (Borden), FIG. 1A.

106. Although Meier did not disclose that its substrate had a "textured front surface," texturing the front surface of the substrate was a well-known technique in the solar cell industry to reduce light reflection and increase light absorption of the solar cell. EX1019 (Luque), 269. As explained in Jordan, "[t]exturing generally increases the efficiency of the resulting photovoltaic cell by increasing light absorption." EX1015, ¶22. Thus, Jordan disclosed that in fabricating a solar cell, "the front surface of the wafer [i.e substrate] is preferably textured." *Id*. Borden also disclosed that the front surface of the solar cell is textured. EX1009, FIG. 1A;

EX1010, FIG. 1. It would have been obvious to the Skilled Artisan to modify Meier's front surface to include texturing, as taught by Jordan and Borden.

### 3. [9b] Back Surface Emitter

107. Claim 9 next requires "*an emitter layer formed over a back surface of the substrate, the emitter layer forming a backside junction with the substrate*."

108. Meier disclosed this limitation. The p+ layer 220 in FIG. 3D or 120 in FIG. 2 of Meier is an "emitter layer" and it forms a "backside junction" with the n-type substrate because the dopant polarity of the layer is opposite that of the n-type substrate. EX1011, 4:50-52, 55. It is formed "by diffusion into the substrate." EX1005, 460-61.

109. Claim 11 additionally requires that the "*the emitter layer*" to be a polysilicon. Meier did not teach a polysilicon emitter layer. However, as I described in paragraphs 86-95, the Skilled Artisan would have been motivated to replace the emitter layer of Meier with a polysilicon emitter layer based on the teachings of Okayasu with a reasonable expectation of success. Thus, the combination of Meier and Okayasu by the Skilled Artisan would result in a back junction solar cell of Meier having a polysilicon emitter layer, as taught by Okayasu, would satisfy this limitation in Claims 9 and 11 because the polysilicon emitter layer would be formed over the back surface of the solar cell's substrate and would also form a backside junction with the substrate.

110. This modified solar cell of Meier (as modified to have a backside polysilicon emitter as taught by Okayasu and a textured front surface as taught by Jordan) forms the basis for the discussion of the next element.

**4. [9c] Oxide layer**

111. Challenged Claim 9 requires "*an oxide layer formed between the back surface of the substrate and the emitter layer*."

112. Although Meier and Okayasu do not teach the claimed oxide layer, Borden does. It would have been obvious to the Skilled Artisan to include an oxide layer, as taught by Borden, between the polysilicon emitter and substrate of the modified Meier/Okayasu solar cell. As I discussed in ¶82 above, Borden disclosed various benefits in forming a tunnel oxide layer in between the polysilicon emitter and the substrate. The Skilled Artisan would have been motivated to combine the *oxide layer* of Borden with modified Meier and Okayasu with a reasonable expectation of success as I described in paragraphs 86-95. This includes the benefits described by Borden, such as preventing epitaxial growth, maintaining optimum band structure, and preventing damage to the substrate:

> Moreover, the tunnel oxide prevents epitaxial growth of amorphous silicon, allowing it to remain amorphous for the optimum band structure. Still further, it provides a layer to protect the surface from plasma damage during deposition of the a-Si layer.

EX1009, ¶8; *see also* Abstract. I note that while Borden refers amorphous silicon, these benefits apply to polysilicon as well. For example, Foglietti likewise taught the benefit of avoiding epitaxial realignment by using a tunnel oxide in the context of polysilicon emitters in bipolar transistors, which translates to solar cells. EX1014, ¶¶8-9, 28, 46. And both amorphous silicon and polysilicon provide a layer to protect the substrate from damage.

113. Therefore, this oxide layer limitation in Claim 9 is met by the combination of Meier, Okayasu, and Borden.

**5. [9d]-[9e] First and second metal contacts**

114. Claim 9 recites: "*a first metal contact making an electrical connection to the substrate on the front side of the solar cell; and a second metal contact making an electrical connection to the emitter layer on the backside of the solar cell*."

115. Meier disclosed front and back metal contacts 212 and 222, as seen from FIG. 3D. In the modified solar cell of Meier, Okayasu, Borden, and Jordan,

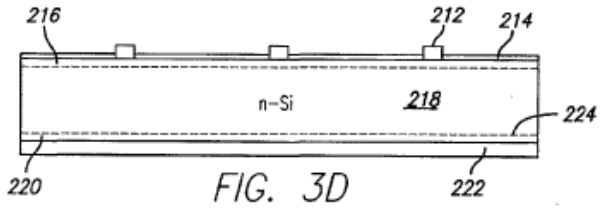

FIG. 3D

[FIG. 1]

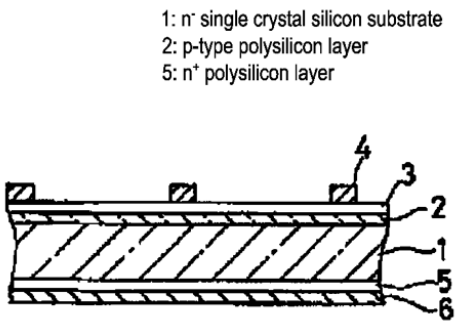

in which the p+ layer emitter 220 is replaced by a polysilicon emitter layer as discussed above, the aluminum metal contacts 222 (as shown in Meier) would still electrically contact the emitter layer on the backside. This is so because Okayasu, like Meier, also taught that "a back electrode 6" is "uniformly provided on the back side of the . . . polysilicon layer 5 and is formed primarily of aluminum [6]," as shown in FIG. 1. EX1012, ¶¶44, 48 (pp. 7-8). Thus, this aluminum layer 222 in Meier or 6 in Okayasu would electrically contact with the polysilicon layer 5 at the backside of the modified solar cell.

116. As to the front side, the front metal contacts 212 contain silver (EX1011, 7:26-28) and this is unchanged in the modified solar cell of Meier. The front metal contacts 212 are in electrical contact with the substrate on the front because, as Meier disclosed, the "silver layer is fired through the [anti-reflective] coating" 214. *Id.*, 6:51-54. "Firing through" was a well-known process in which a contact paste "fired through" the antireflective coating (such as silicon nitride) to make contact through it. *See* EX1019 (Luque) at 275.

117. Thus, it would have been obvious and readily within the level of ordinary skill of the Skilled Artisan to form metal contacts on the front and back side of the solar cells to electrically connect with the substrate and polysilicon emitter, respectively, such that electric current can be drawn out of the solar cell.

### 6. [9f] Configured to power external circuit

118. Claim 9 recites: "*the first metal contact and the second metal contact being configured to allow an external electrical circuit to be powered by the solar cell*." This element is also met by the solar cell, as modified by the combined teachings of Meier/Okayasu/Borden/Jordan. This element merely states the well-known functional purpose of the front and back metal contacts in a solar cell, i.e., powering an external electrical circuit, which is the objective of the front and back contacts in any solar cell. As Meier explained, "[s]olar cells are widely used because they convert easily accessible energy from a light source, such as the sun, to electrical power to operate electrically driven devices, e.g., calculators, computers, and heaters used in homes." EX1011, 1:15-18. "Calculators, computers and heaters" are all external electrical circuits when connected to the solar cell.

119. The 516 Patent also states in the discussion of the background art that "[s]olar cells are well known devices for converting solar radiation to electrical energy" and "[t]he metal contacts allow an external electrical circuit to be coupled to and be powered by the solar cell." EX1001, 1:19-30. In other words, all such contacts, including those disclosed by Meier, Borden, Okayasu, and Jordan, are well known to be "*configured to allow an external electrical circuit to be powered by the solar cell*."

120. Thus, all of the elements of Claim 9 are found in the combination of Meier in view of Okayasu, Borden, and Jordan.

**7. Claim 10 - Anti-reflective layer**

121. Claim 10, depends from Claim 9, and further recites "*an antireflective layer over the textured front surface of the substrate*." The modified solar cell of Meier, Okayasu, Borden, and Jordan would meet the limitation of an antireflective layer being formed over the textured front surface.

122. Specifically, Meier disclosed "an anti-reflecting coating 214" that is deposited on the front surface of the substrate. EX1011, 6:20-21, FIG. 3D. Jordan, which disclosed texturing the front surface (EX1015, ¶22), likewise disclosed that after texturing, "a surface coating, preferably one that can function as an anti-reflective coating, is deposited on the front surface of the wafer …." (EX1015, ¶24). Because the anti-reflective coating is deposited after the texturing, the anti-reflective layer would be "over" the textured front surface of the substrate. This is consistent with the description of the 516 Patent for forming the antireflective layer 103 after texturing (see EX1001, FIG. 4E and 4H, and 4:28-32 and 5:20-27) and what was well known in the art, as taught for example by Luque, disclosing that an antireflection coating (ARC) is applied after texturing:

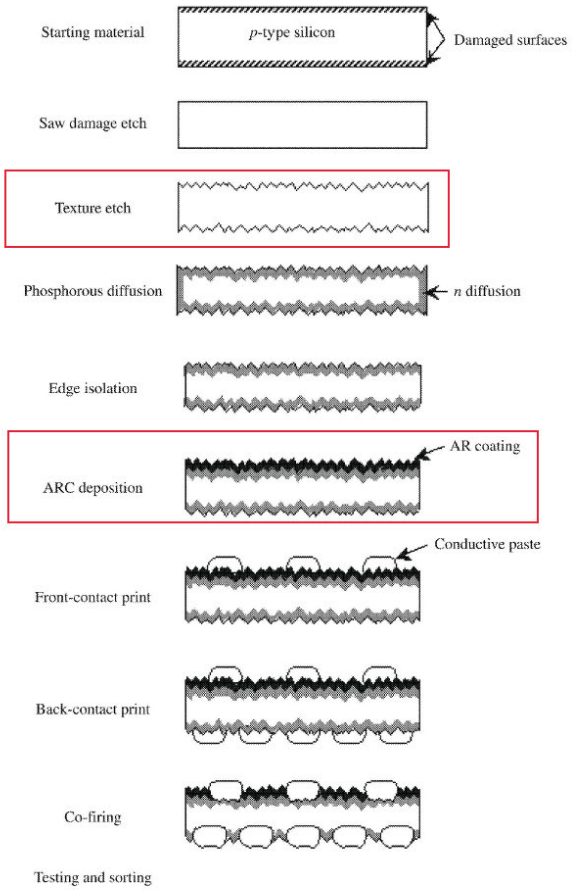


**Figure 7.6** A typical processing sequence with schematic illustrations of the resulting structures

EX1019, 272 (Fig. 7.6). Duerinckx (EX1022) also illustrates that antireflective coatings are applied after texturing. It disclosed "isotropic texturization" that "randomly textures the wafers to decrease the reflection of light from the front surface," followed later by "$SiN_x$-deposition: As described above, the silicon nitride layer has been tailored to reduce the reflection and absorption and to increase the uniformity of the deposition." EX1022 at 239. Thus, it was well known to the Skilled Artisan even before 2008 to apply an anti-reflective layer over the textured front surface of the substrate of a solar cell.

### 8. Claim 11 – N-type substrate and P-type emitter

123. Claim 11 depends from Claim 9, and further recites "*the substrate comprises an N-type silicon substrate and the emitter layer comprises a P-type doped polysilicon*." The opposite polarity of the polysilicon layer and the substrate forms a "backside junction," as recited in claim 9.

124. To improve on the conventional front junction solar cell, Meier taught a backside junction solar cell with an n-type silicon substrate and a backside p-type emitter. EX1011, 4:27-58. Based on the teaching of Okayasu on the advantages of replacing a conventional diffused emitter with a polysilicon emitter, it would have been obvious for a Skilled Artisan to modify the p-type emitter of Meier with a p-type polysilicon emitter, as described in paragraphs 86-95. Thus, the combination of Meier and Okayasu also disclosed the additional limitation in Claim 11.

## V. CLAIMS 9-11 ARE UNPATENTABLE OVER MEIER, OKAYASU, FOGLIETTI, GAN, AND JORDAN

125. In my opinion, the combination of Meier in view of Okayasu, Foglietti, Gan and Jordan would also have rendered Claims 9-11 obvious. The reasons for combining Meier, Okayasu, and Jordan are the same as discussed in the previous section, and this combination satisfies all of the elements of Claims 9-11 except for the "oxide layer" in between the polysilicon emitter and the substrate, as I discussed in ¶¶99-124. The only difference between the combination used in this

section and the prior section is that Foglietti and Gan are used for the teaching of the oxide layer instead of Borden.

### A. Foglietti (EX1014)

126. U.S. Patent Pub. No. 2002/0142500 ("Foglietti") (EX1014) taught that it is beneficial to form an interfacial oxide with a polysilicon emitter for bipolar transistors. Foglietti disclosed: "This thin oxide layer can affect substantially the operation of the transistor and impact its current gain. Such a film is typically called an interfacial oxide. The interfacial oxide tends to have a beneficial impact on the gain of the bipolar transistor." EX1014, ¶¶2-3. Foglietti disclosed that an interfacial oxide with good integrity prevents the polysilicon emitter grains from realigning. "Consequently, none of the polysilicon grains assume the orientation of the underlying substrate 250, that is, no grain realignment is observed in the polysilicon 262. Consequently, hole current therewith is minimized and the transistor gain is increased. In addition, due to good interfacial oxide uniformity, the transistor gain is substantially repeatable from wafer to wafer." EX1014, ¶¶28,46. This is also known as epitaxial realignment. EX1014, ¶¶8-9. Foglietti described a method of forming an interfacial oxide in a bipolar transistor by rinsing a wafer with ozonated deionized water. EX1014, Abstract.

127. Although Foglietti disclosed these advantages of an interfacial oxide layer in the context of bipolar junction transistors (BJT), they are applicable to

solar cells. The interfacial oxide has a much higher bandgap than Si or polysilicon, with the larger band offset in the valence band. In an NPN polyemitter BJT, this suppresses injection of holes from the base to emitter more than the injection to electrons from the emitter to the base, thereby improving emitter injection efficiency, and therefore the gain of the transistor. The same structure and band diagram also has beneficial effects for solar cells. The high bandgap interfacial oxide reduces injection of minority carrier holes from the n-Si substrate, thereby reducing saturation currents, Jo, and thus improving Voc (=kT/q log(Jopt/Jo)).

**B. <u>Gan (EX1007)</u>**

128. J.Y. Gan et al., "Polysilicon Emitters for Silicon Concentrator Solar cells," Proceedings of the 21st IEEE-PVSC, 1990 ("Gan") examined "polysilicon emitters with a thermally grown interfacial oxide" for solar cells in "great detail." EX1007, 245. Gan disclosed that "a very thin oxide (interfacial oxide)" "always exists" between the polysilicon emitter and substrate, "which can be as a by-product of the cleaning process or is grown intentionally." EX1007, 245. Gan found that solar "cell performance can be improved if the diffused-emitter [*i.e.*, an emitter doped into the substrate, as in Meier] is replaced with the polysilicon emitter,…." EX1007, 245. Gan experimented with thin interfacial oxides typically less than 20 Angstroms. EX1007, 246. Gan also tested both n- and p-type emitters. *E.g.*, EX1007, Figs. 4-5, 249.

Gan concluded that "polysilicon emitters with low $J_o$ and $\rho_c$ can be obtained with a very small fraction of interfacial oxide breakup." EX1007, 249. $J_o$ measures reverse saturation current and $\rho_c$ measures the resistivity of the contact. A lower $J_o$ number indicates a lower recombination which is beneficial to solar cell efficiency, and lower $\rho_c$ indicates lower contact resistance of the solar cell, which, in turn, leads to lower solar cell series resistance, improved fill factor and higher efficiency. Both $J_o$ and $\rho_c$ are thus tied to indicators that improve solar cell performance. Gan noted that the $J_o$ was lower due to the "use of thermal oxide as the interfacial layer in our samples." EX1007, 248. Gan taught that "polysilicon emitters with these qualities can be quite useful for silicon concentrator solar cells." EX1007, 249. Citing to Sinton, Gan further noted that "more than one absolute percent of the cell efficiency is obtained for backside contact solar cell with polysilicon emitters with characteristics shown here …." *Id.* Backside contact solar cells were known to have their PN junction on the backside of the solar cells. Below, for example, is a basic schematic diagram of a back-contact solar cell as illustrated in a 2002 Handbook of Photovoltaics Science and Engineering, Chapter 3, which shows a p+ region forming a PN junction with the n-type base:

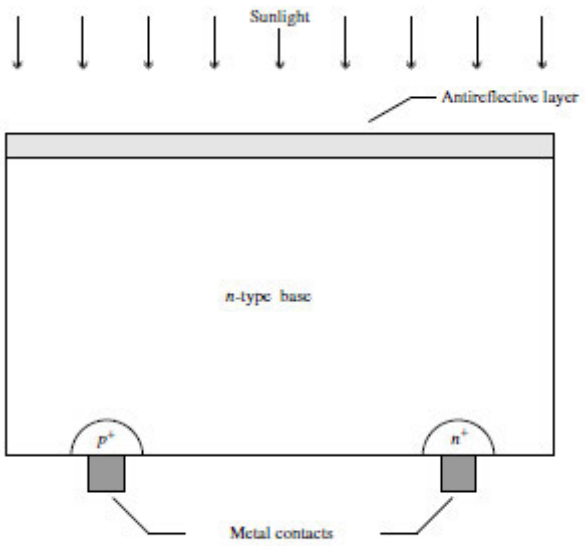


**Figure 3.26** Schematic of a back-contact solar cell

EX1019, 108.

### C. <u>Combination of the Modified Meier with Foglietti and Gan</u>

129. In the combination of Meier modified by Okayasu, Jordan and in further view of Foglietti, and Gan, the Skilled Artisan would have modified Meier's solar cell to replace the backside diffused p+ layer in Meier with a p+ layer polysilicon emitter (based on Okayasu) with an interfacial oxide layer (based on Foglietti and Gan) between the polysilicon layer and the substrate, and would have textured the front surface as taught by Jordan.

130. Both Foglietti and Gan, like Borden, taught the benefits of having an oxide layer in between the polysilicon emitter and the substrate, and would have motivated the Skilled Artisan to include an oxide layer in between the polysilicon layer and the substrate. Gan specifically taught the benefits of the polysilicon emitter with an oxide layer in the solar cell context. For example, Gan disclosed

that "***the cell performance can be improved if the diffused-emitter [e.g., of Meier] is replaced with the polysilicon emitter***,…." EX1007, 245 (emphasis added). Gan also noted that "the $J_o$ of the p-type polysilicon emitter (Fig 5) [beneficially] appears to be much lower than what has been previously reported," and suggested that it "may have to do with the use of thermal oxide as the interfacial layer in our samples." EX1007, 248. Gan explained that "because the dominant recombination is likely at the oxide interface, it implies that the oxide must only be broken by a very small fraction, which is consistent with what was observed in Fig. 2." EX1007, 248. Gan went on to provide lowered Jo and $\rho_c$ data in Figure 6 and concluded the characteristics brought about by the polysilicon emitter with interfacial oxide layer structure is "***quite useful for silicon solar cells***." EX1007, 249 (emphasis added). Gan further pointed to prior modeling and determined that "***more than one absolute percent of the cell efficiency is obtained for a backside contact solar cell with polysilicon emitters*** with characteristics shown here …." EX1007, 249 (emphasis added). Notably, Gan's calculations are in the context of a backside contact solar cell which, like Meier, would place the emitter and PN junction on the backside of the solar cell, which would further suggest the combination.

131. While Gan referred in part to silicon concentrator solar cells, it also more broadly suggested that a polysilicon emitter with interfacial oxide is "quite

useful for silicon solar cells" generally (EX1007, 249), and thus, the Skilled Artisan would understand Gan as recommending the feature for solar cells in general. In particular, silicon concentrator solar cells use lenses or curved mirrors to focus sunlight onto the solar cell, and often move to track sunlight. The polysilicon emitter and interfacial oxide taught by Gan, while applicable to enhancing concentrator solar cell efficiency, is equally applicable to enhancing the efficiency of solar cells. Thus, a Skilled Artisan would understand Gan as teaching that its polysilicon emitter with interfacial oxide feature is beneficial for solar cell efficiency in general. Gan also disclosed that the benefits apply to both n- and p-type polysilicon emitters, including those formed on the back side of the solar cell, and this would also have suggested replacing Meier's rear p-type diffused *silicon* emitter with a rear p-type *polysilicon* emitter plus the beneficial interfacial oxide layer. EX1007, 249 (discussing "both n- and p-type polysilicon emitters.").

132. Foglietti also taught the beneficial formation of an interfacial oxide with a polysilicon emitter as it suppresses the "partial realignment of the polycrystalline grains." EX1014, ¶¶2-3. Foglietti further disclosed other benefits of the interfacial oxide including "hole current therewith is minimized and the transistor gain is increased" and "is substantially repeatable from wafer to wafer." EX1014, ¶¶28,46. A Skilled Artisan would have thus further been motivated to include a polysilicon emitter with an interfacial oxide in the combination of Meier

and Okayasu because these benefits are transferable to solar cells. For example, the same issue of epitaxial realignment present in a bipolar transistor with a polysilicon emitter applies to a solar cell with a polysilicon emitter. And having a process that is substantially repeatable from wafer to wafer is beneficial in all types of devices, including both transistors and solar cells, so that the manufacturing process is consistent and predictable.

133. Thus, the Skilled Artisan would have been motivated to incorporate an oxide layer between the rear side polysilicon emitter and the substrate of the solar cell of Meier, as modified by Okayasu (polysilicon emitter) and Jordan (texturing).

134. The Skilled Artisan would have reasonably expected to succeed in incorporating an oxide layer between the polysilicon emitter and substrate, as both Foglietti and Gan taught how this oxide layer can be formed. For example, Foglietti taught that the oxide layer can be formed by "using an ozonated deionized water rinse prior to loading the wafer in the poly deposition chamber [and this] allows for an increase in wafer throughput relating to the formation of the interfacial oxide and poly emitter." EX1014, ¶14. Gan, alternatively, taught that the oxide layer can be formed by the thermal oxidation of the silicon substrate before the deposition of the polysilicon layer. EX1007, 246. Both techniques would have been well within the level of skill of the Skilled Artisan by 2008 who

would have been able to readily incorporate such oxidation step in the manufacture of the modified solar cell of Meier/Okayasu/Jordan.

## VI. FROITZHEIM AND GAN WOULD HAVE RENDERED CLAIMS 9-12 OBVIOUS

### A. EP1732142A1 to Froitzheim (EX1006)

135. EP1732142A1 ("Froitzheim") (EX1006) was published on December 13, 2006. EX1006, face. I understand that this reference is prior art to the 516 Patent and it was not considered during the 516 Patent prosecution.

136. Froitzheim explained that in conventional solar cells, the emitter is placed at the front of the cell to form a PN junction with an oppositely doped p-type substrate. EX1006, ¶2. However, just like in Meier, Froitzhem proposed to instead place the emitter/PN junction at the solar cell's backside. EX1006, ¶¶8, 11. Froitzheim's Figure 1, shown below, is a solar cell 1 having an N-type body layer or substrate 3 with a front side 6 and a rear side 7. EX1006, ¶24.

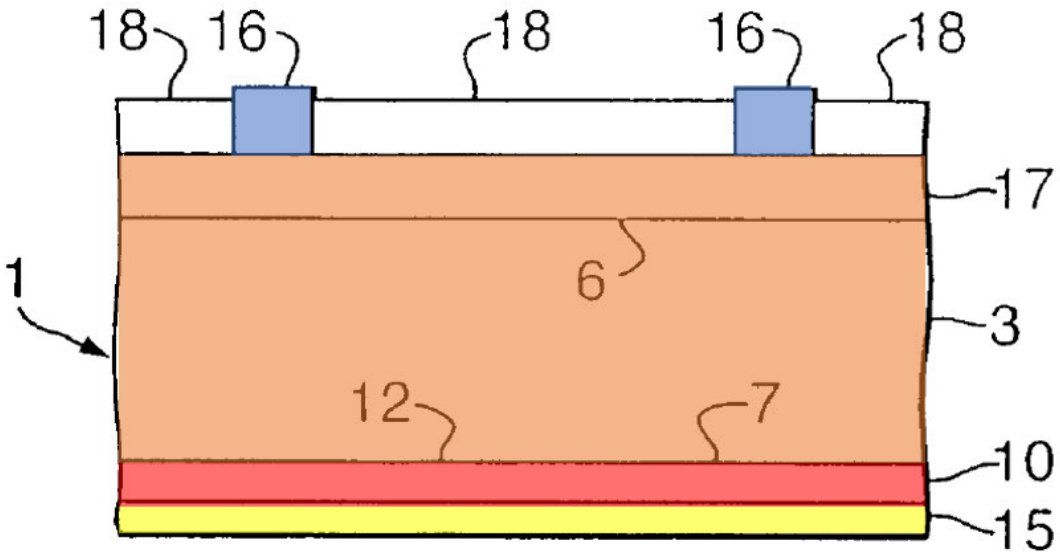

137. Starting from the bottom, a "rear side contact 15 [yellow] is arranged in electrical connection with the p-doped layer 10 [red]," which is an emitter. EX1006, ¶¶25-27. This backside p-doped emitter is formed by diffusing boron (a p-type dopant) into the n-type substrate. EX1006, ¶¶24, 26, 40-41. The p-doped emitter 10 (red) at the solar cell's rear side forms a PN junction 12 with the n-type silicon body layer 3 (orange), and thus forms a backside junction with the substrate. EX1006, ¶¶24-25.

138. Unlike Meier that did not disclose texturing of the substrate, Froitzheim disclosed that "etching can be used to texture the surface in order to improve the geometry of incidence of light in order to prevent reflection" at the front side. EX1006, ¶39; *see also*, *id*. ¶56. The Skilled Artisan would understand this passage to be referring to the front side of the solar cell because that is the side that faces the sun and receives most of the incident light (*i.e.*, light striking the solar cell). Hence, avoiding reflection on the front side of the solar cell is of particular importance, as I discussed for example, in the context of Jordan above. Jordan, for example, explained that texturing the front surface "increases the efficiency" by "increasing light absorption." EX1015, ¶22.

139. Turning back to Froitzheim Figure 1, an optional n+ front surface field 17 [orange] is depicted on substrate 3, EX1006, ¶¶15-17, 28, 59. The front side n+ surface can be made by diffusion of phosphorous to the substrate, and thus

the n+ layer is part of the substrate. EX1006, ¶¶43-44. Finally, "at the front side 6, screen-printed front side contacts 16 [blue] are provided in electrical connection with the n-type silicon body layer." EX1006, ¶28.

140. Froitzheim disclosed an alternate configuration for the rear contacts 15 that do not cover the entire backside so that "less material such as Ag [silver] or Al [aluminum] is required for the contacts." EX1006, ¶¶ 20, 33. Figures 3-5 depict this configuration, and Figure 3 is reproduced below showing the alternative rear contacts 35 (yellow):

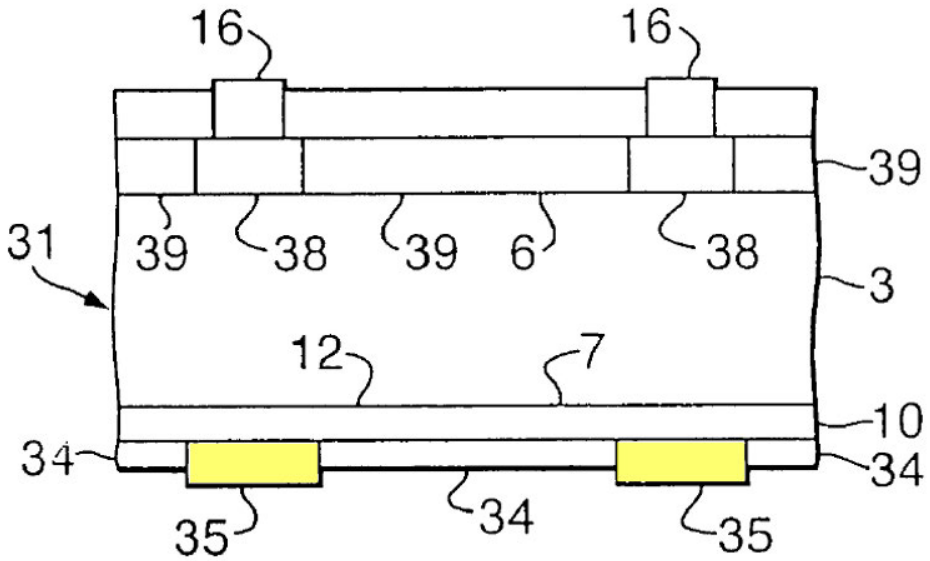


141. Similar to FIG. 1, layer 10 is the p-type emitter region formed on an N-type substrate 3, which forms a backside junction. An additional "passivation layer 34" made of silicon oxide is also formed on the p-type emitter region 10 and the metal contacts 35 are formed over the passivation layer 34. EX1006, ¶33. In particular, layer 34 in FIG. 3 is described as a passivation layer "for which the

same type of layers can be used as for the front side." EX1006, ¶33. Froitzheim disclosed that silicon dioxide ("SiO2") is one of the possible passivation materials for the front side, and thus based on the passage above, it could also be used for layer 34 on the back side. EX1006, ¶¶19, 30. Froitzheim further taught that "passivation and antireflection coating can be applied using known methods, *before or after contact* formation." EX1006, ¶50. Thus, when the passivation and antireflection are formed before contact formation, the second metal contacts (35) would be formed over the silicon dioxide layer (34). This is similar to "firing through" of the silver paste through windows in the ARC on the front.

### B. <u>Combination of Froitzheim and Gan</u>

142. It would have been obvious to the Skilled Artisan to combine the solar cell of Froitzheim and Gan to arrive at claims 9-12 of the 516 Patent. The combination analyzed here—Froitzheim/Gan—is straightforward. Froitzheim's back junction solar cell would be modified so that Froitzheim's p-type (boron) *diffused* emitter 10 is replaced with a p-type *polysilicon* emitter that also includes an interfacial oxide layer between the emitter and the substrate, as taught by Gan. A modified Froitzheim Fig. 1 is illustrated below.

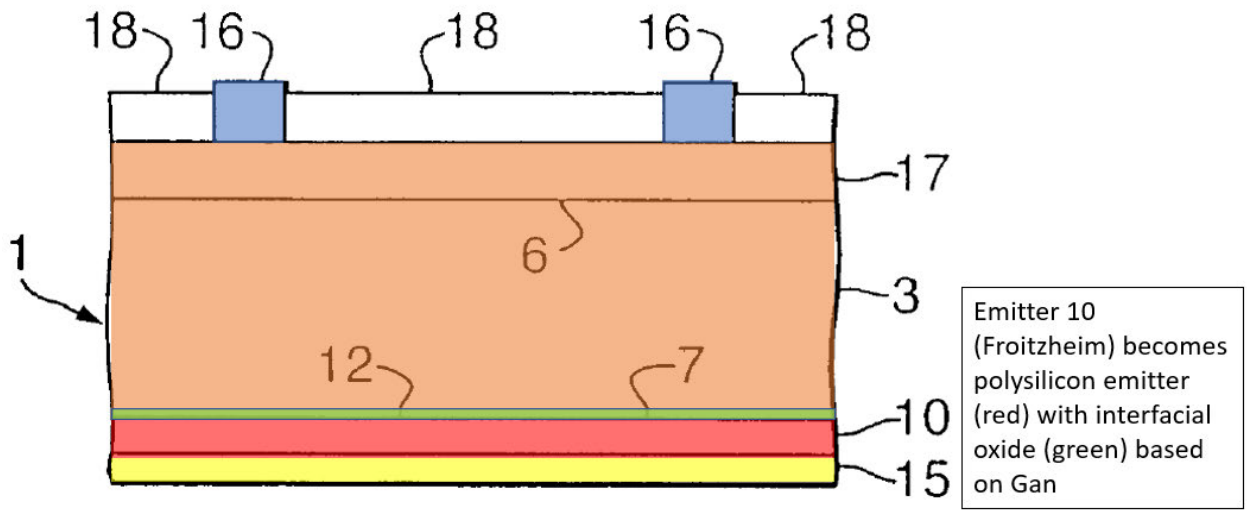


### 1. Motivation to Modify Froitzheim with Gan

143. Froitzheim and Gan are analogous art because each is in the same field of endeavor—solar cell design. EX1001, 1:15-17; EX1006, Abstract, ¶¶1,9; EX1007, 245, 249. Each is also reasonably pertinent to the problems of efficiency and cost-effectiveness of solar cell designs. EX1001, 1:40-42; EX1006, Abstract, ¶¶1,9; EX1007, 245, 249.

144. The Skilled Artisan would have been motivated to replace Froitzheim's diffused emitter with a polysilicon emitter along with an oxide layer because Gan taught and suggested that this modification would be an improvement to the solar cell. Gan disclosed that "***the cell performance can be improved if the diffused-emitter [of Froitzheim] is replaced with the polysilicon emitter***,…." EX1007, 245. Gan also noted that "the $J_o$ [i.e., an indication of surface recombination] of the p-type polysilicon emitter (Fig 5) [beneficially] appears to be

much lower than what has been previously reported," and suggested that it "may have to do with the use of thermal oxide as the interfacial layer in our samples." EX1007, 248. Gan explained that "because the dominant recombination is likely at the oxide interface, it implies that the oxide must only be broken by a very small fraction, which is consistent with what was observed in Fig. 2." EX1007, 248.

145. Gan went on to provide lowered Jo and $\rho_c$ data in Figure 6 and concluded the characteristics brought about by the polysilicon emitter with interfacial oxide layer structure is "quite useful for silicon solar cells." EX1007, 249. As I mentioned before, a lower $J_o$ number indicates a lower recombination, and lower $\rho_c$ indicates lower series resistance of the solar cell, both of which tend to improve solar cell performance. Froitzheim likewise used silicon solar cells and thus would benefit from lower $J_o$ and lower $\rho_c$. EX1006, Abstract. Gan further pointed to prior modeling and determined that "more than one absolute percent of the cell efficiency is obtained for a backside contact solar cell with polysilicon emitters with characteristics shown here …." EX1007, 249. It is noteworthy that Gan's calculations are in the context of a backside contact solar cell which, like Froitzheim, would place the emitter and PN junction on the backside of the solar cell, which would further suggest the combination.

146. While Gan referred in part to silicon concentrator solar cells, it also more broadly suggested that a polysilicon emitter with interfacial oxide is "quite

useful for silicon solar cells" generally (EX1007, 249), and the Skilled Artisan would interpret Gan as recommending the feature for solar cells in general. In particular, silicon concentrator solar cells use lenses or curved mirrors to focus sunlight onto the solar cell, and often move to track sunlight. The polysilicon emitter and interfacial oxide taught by Gan, while applicable to enhancing concentrator solar cell efficiency, is also applicable generally to enhancing the efficiency of solar cells. Thus, the Skilled Artisan would understand Gan as teaching that its polysilicon emitter with interfacial oxide feature is beneficial for solar cell efficiency in general. Gan also discloses that the benefits apply to both n- and p-type polysilicon emitters, including those formed on the back side of the solar cell, and this would also have suggested replacing Froitzheim's rear p-type diffused *in-substrate* emitter with a rear p-type deposited *polysilicon* emitter plus the beneficial interfacial oxide layer. EX1007, 249 (discussing "both n- and p-type polysilicon emitters.").

147. The Skilled Artisan would further have been motivated specifically to leave the emitter on the back side of the solar cell because Froitzheim disclosed that the back junction design "shows improved stability and good efficiency." EX1006, ¶9. Before the 516 Patent, it was well known that forming a backside junction can often lead to higher cell efficiency than in front junction cells. EX1039 (Abstract). The thin, diffused emitter typically has a higher concentration

than the thick base or absorber region where most of the solar photons are absorbed, leading to electron-hole pair generation. These carriers must be able to diffuse to the metal contacts if they are to result in a photocurrent at the external terminals. If the emitter is on the front side, there is strong absorption in the emitter but many of them recombine quickly in the highly doped region before they can diffuse to the metal contacts because of the short minority carrier lifetimes and diffusion lengths, leading to loss of efficiency. Also, some of the photon absorption in a highly doped emitter does not lead to electron-hole pair formation but rather Auger processes which do not lead to photocurrents. These problems are not seen in a properly designed back junction cell. For example, Dr. Martin Green, a well known solar cell researcher at the University of South Wales, published a paper in 1993 reporting higher efficiencies with back junction solar cells compared with front junction solar cells:

> Both of the rear junction n-silicon solar cells have achieved high energy conversion efficiencies of 21.9% and 21.2% respectively…. Some front junction n-silicon cells have also been fabricated to compare with the rear junction cells. The measured results have shown that the open-circuit voltage for the front junction cells is about 34 mV lower than the rear junction cells. The reason for this is discussed.

EX1039, (Abstract). After presenting his data, Dr. Green explained the same phenomenon as I described above:

> The high surface recombination at the boron-diffused top surface limits the open-circuit voltage in the front junction n-silicon cells. By using rear junction structure, the top surface becomes phosphorus-diffused and has relatively low surface recombination. The open-circuit voltage, Voc is hence significantly improved.

EX1039, 156. As such, to retain the original advantages of a back junction solar cell and to further improve upon it, the Skilled Artisan would replace the backside emitter in Froitzheim with a backside polysilicon emitter with an interfacial oxide layer, as Gan taught. This replacement merely substitutes one known element for another already known in the field, yielding a predictable result. Thus, in the combination, Froitzheim's modified emitter would continue to function as before, but with the expected additional improvement provided by the polysilicon emitter and interfacial oxide layer.

148. Aside from Gan, numerous other prior art references taught the inclusion of an interfacial oxide layer when replacing a diffused emitter with a polysilicon emitter. For example, the 771 Application Examiner found that Foglietti taught the beneficial formation of an interfacial oxide with a polysilicon emitter as it suppresses the "partial realignment of the polycrystalline grains." EX1014, ¶¶2-3. While Foglietti is directed to a bipolar transistor, the Skilled

Artisan would have looked to it when designing solar cells as was commonly done in the art, as seen by the suggestion of Yablonovitch and others. EX1016, 597. Indeed, the use of polysilicon emitters in solar cells itself was an idea adapted from bipolar transistors. EX1007, 245. Foglietti further disclosed other benefits of the interfacial oxide including "hole current therewith is minimized and the transistor gain is increased" and "is substantially repeatable from wafer to wafer." EX1014, ¶¶28,46. The Skilled Artisan would have thus further been motivated to include a polysilicon emitter with an interfacial oxide layer in Froitzheim because these benefits are equally transferable to solar cells. For example, the same issue of epitaxial realignment present in a bipolar transistor with a polysilicon emitter applies to a solar cell with a polysilicon emitter. And having a process that is substantially repeatable from wafer to wafer is beneficial in all types of devices, including both transistors and solar cells, so that the manufacturing process is consistent and predictable.

149. In the specific context of solar cells, the Skilled Artisan would have further been motivated because Kwark taught that addition of an interfacial chemically grown oxide (chemox) between polysilicon and the substrate "greatly decreases the $J_{oe}$," which "translates into potential improvements of energy conversion efficiency for solar cells." EX1008, 742, 745. Kwark provided data

comparing polysilicon emitters with and without the oxide layer, and noted "the large difference when the interfacial oxide is missing." EX1008, 745 Fig. 4.

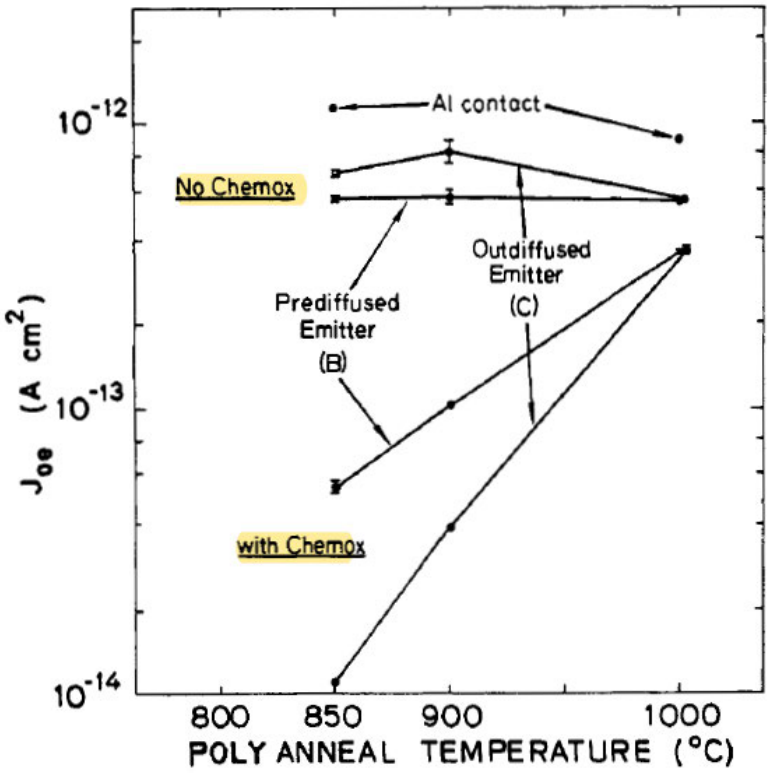


Fig. 4: emitter saturation current for POLY contacts with and without a chemically grown interfacial layer vs. anneal temperature. Thicknesses range from 3000-3600 angstroms. Note the large difference when the interfacial oxide is missing.

150. Borden also disclosed in the context of solar cells that the tunnel oxide "prevents epitaxial growth," allowing for "optimum band structure" and "provides a layer to protect the surface from plasma damage." EX1009, Abstract. These benefits apply to both amorphous silicon and polysilicon. For example, as already noted, Foglietti likewise taught the benefit of preventing epitaxial realignment in the context of bipolar transistors, which translates to solar cells. EX1014, ¶¶8-

9,28,46 (discussing epitaxial realignment between silicon substrate and polysilicon).

**2. Reasonable Expectation of Success**

151. One skilled in the art would have considered the Froitzheim/Gan combination to be merely an arrangement of old elements with each performing the same function it had been known to perform (the emitter of Froitzheim continuing to act as an emitter, but modified to be polysilicon with an interfacial oxide) and yielding no more than what one would expect from such an arrangement (a solar cell with improved performance).

152. Specifically, before introducing the boron dopant by diffusion at the rear side of the substrate (for example, as described in paragraphs 40-41 of Froitzheim), the Skilled Artisan would perform Gan's steps of growing a thin thermal oxide to form the interfacial oxide layer and polysilicon deposition to form the polysilicon on the oxide layer on the back side of the wafer, after which the polysilicon would be doped instead of the substrate to form the polysilicon emitter. EX1007, 246.

153. Combining Froitzheim/Gan as described here would have been well within the level of ordinary skill in the art. It would not have resulted in any unpredictable results and could have been readily accomplished without undue experimentation and with a reasonable expectation of success. Gan taught detailed

steps on how to form the oxide layer and the doped polysilicon emitter layer on a silicon substrate. EX1007, 246.

154. The combination would simply have been the combination of prior art elements according to known methods to yield predictable results. Likewise, substituting Froitzheim's in-substrate emitter with a deposited polysilicon emitter and oxide layer would be simple substitution of one known element for another to obtain predictable results. It would further constitute use of a known technique (depositing polysilicon emitters with an oxide layer) to improve similar devices (Froitzheim's solar cell) in the same way. It would also constitute applying a known technique to a known device ready for improvement to yield predictable results.

### C. <u>Combination of Froitzheim and Gan Met All Claim Elements</u>

#### 1. Claim 9

##### *a) Preamble*

155. Claim 9 recites: "*A solar cell having a front side facing the sun to collect solar radiation during normal operation and a backside opposite the front side*." Froitzheim meets this by disclosing: "During normal operation of the solar cell 1 **the front side 6 faces the sun and light is received through the area of the front surface** that is not covered by the front contact 16." EX1006, Figure 1, ¶32.

***b) [9a] Textured substrate***

156. Claim 9 recites: "*a substrate having a textured front surface*." Froitzheim meets this by disclosing a substrate referred to as "silicon body 3". Froitzheim further disclosed that "[i]f desired a short, alkaline crystal-oriented etching can be used to texture the surface in order to improve the geometry of incidence of light in order to prevent reflection." EX1006, ¶39. This passage refers to texturing the front side of the solar cell because that is the side that faces the sun and receives most of the incident light (*i.e.*, light striking the solar cell). Hence, avoiding reflection on the front side of the solar cell is of particular significance. *See also* EX1015 (Jordan), ¶22 (explaining that the front surface of the wafer is "preferably textured" which "increases the efficiency" by "increasing light absorption"). The Skilled Artisan would understand that solar cells receive incident light on the front surface. And texturing of the front surface prevents reflection of the light away from the cell and deflects the light into the cell body, which is why Froitzheim says the texture will improve the geometry of incidence of light in order to prevent reflection." EX1006, ¶39. This was also well-known and taught by, for example, in Chapter 7 of the 2002 Handbook of Photovoltaics:

**7.3.6.2 Texturing**

> Alkaline (KOH or NaOH-based) solutions etch anisotropically a Si crystal exposing {1 1 1} planes on which the etching rate is lowest. On [1 0 0]–oriented wafers, randomly distributed, square-

> base pyramids are formed, whose size is adjusted to a few microns by controlling etching time and temperature. ***In a textured face, a ray can be reflected toward a neighboring pyramid (Figure 7.5a) and hence absorption is enhanced***. Though calculation of reflection requires ray tracing, a rough estimate of near-normal incidence can be derived, by assuming that each ray strikes twice the Si surface so that reflection is the square of the untextured case.
>
> ***Texturing is incorporated into both industrial and laboratory Si solar cells, and, in combination with antireflection (AR) coating, reduces reflection losses to a few percent***. In the latter case, in order to better control the pyramid geometry and to allow delineation of fine features on the surface, photolithographic techniques are used to define inverted or upright pyramids at the desired positions. It has to be noted that in this case the reflectivity is similar to that of a random texture [64].
>
> Light entering the substrate at a textured surface is tilted with respect to the cell normal. This means that photogeneration takes place closer to the collection junction, which is very beneficial for low-diffusion length cells, by enhancing the collection efficiency of medium- to long wavelengths (Figure 7.5a). The effect is equivalent to an increase of the absorption coefficient. As a drawback, textured surfaces present higher SRVs.

EX1019 (Luque), 269.

### *c) [9b] back surface emitter and junction*

157. Claim 9 recites: "*an emitter layer formed over a back surface of the substrate, the emitter layer forming a backside junction with the substrate*." A backside junction, as opposed to a back surface field, is formed by an emitter layer that has an opposite dopant type than the silicon substrate. EX1001, Abstract, 1:46-48; *see also* EX1005 at 300-301, 317-18, 353-55.

158. In Froitzheim, the p-doped emitter 10 (red) in the figure below forms a "PN junction 12" with the N-type substrate on the backside of the solar cell, and thus forms a "*backside junction*" because their dopant types are opposite. EX1006, ¶¶24-27.

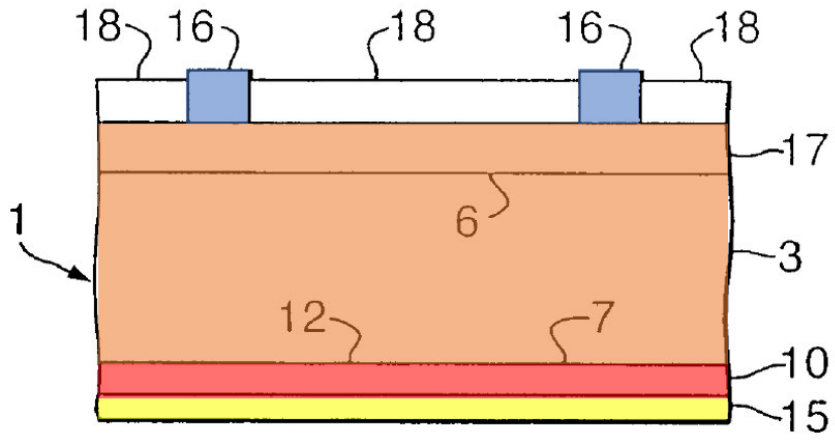


159. In the Froitzheim/Gan combination, Froitzheim's p-type diffused emitter is replaced with a p-type polysilicon emitter and oxide layer as taught by Gan that replacing the backside diffused emitter with a polysilicon emitter would improve cell performance. EX1007, 245. This modified polysilicon emitter meets

the claim element as it is *formed over a back surface of the substrate* and forms *a backside junction* (PN junction) 12 with the substrate.

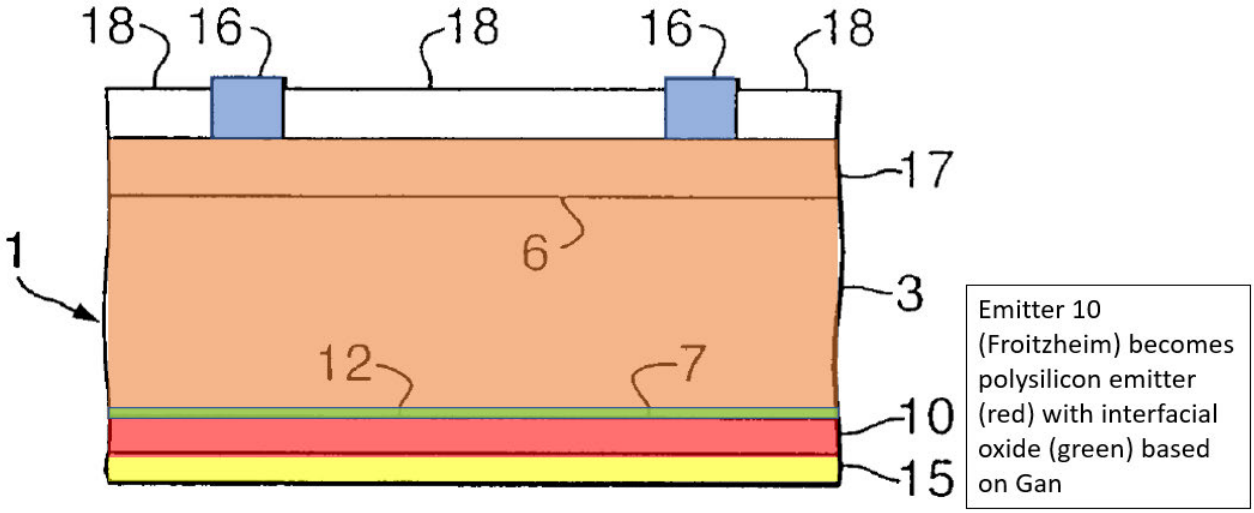


***d) [9c] Oxide layer***

160. Claim 9 recites: "*an oxide layer formed between the back surface of the substrate and the emitter layer*." Froitzheim does not disclose this element, but as I described in ¶¶128-129, Gan disclosed this element. The Skilled Artisan would have found it obvious to modify Froitzheim to include an oxide layer as taught by Gan when the Skilled Artisan simultaneously replaces the diffused emitter in Froitzheim with a polysilicon emitter, as also taught by Gan.

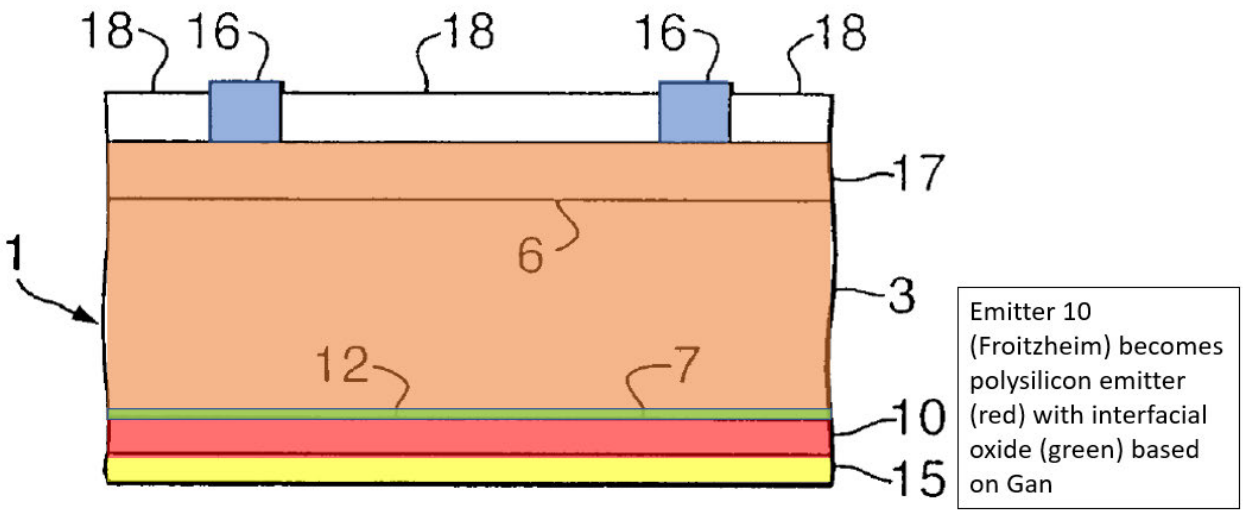


161. Indeed, Gan discloses that with polysilicon emitters, "there always exists a very thin oxide (interfacial oxide), which can be as a by-product of the cleaning process or is grown intentionally." EX1007, 245. This interfacial oxide layer also benefits the performance of the solar cell by lowering $J_o$, as taught by Gan and discussed in ¶129 above. EX1007, 248.

***e) [9d] First metal contact and [9e] second metal contact***

162. Claim 9 recites: "*a first metal contact making an electrical connection to the substrate on the front side of the solar cell*" and "*a second metal contact making an electrical connection to the emitter layer on the backside of the solar cell*."

163. Froizheim disclosed both front and back metal contacts, by disclosing screen-printing the front contacts 16 (blue) and back contacts 15 (yellow) in modified Figure 1 below. EX1006, ¶¶49,60.

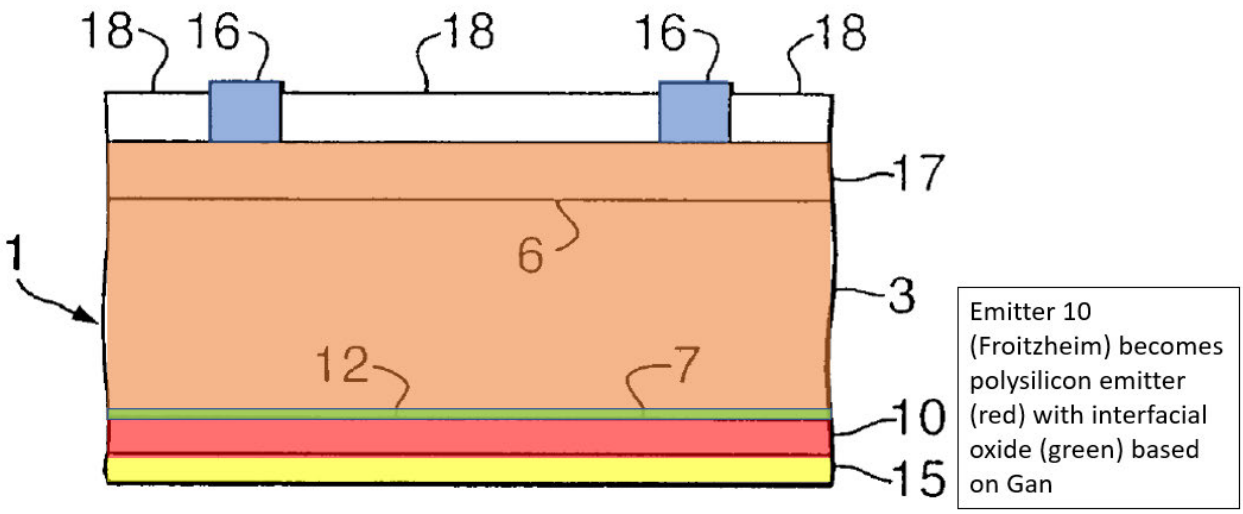


164. Froitzheim disclosed that the front contacts "are provided in electrical connection with the n-type silicon body layer." EX1006, ¶28. The "rear side contact 15 is arranged in electrical connection with the p-doped [emitter] layer 10." EX1006, ¶27. In the modified Froitzheim solar cell where the diffused emitter is replaced with a polysilicon emitter, as taught by Gan, the rear contact 15 would make electrical connection with the polysilicon emitter instead.

165. As was well known, screen-printed contacts were made from silver paste, which forms metal contacts. EX1011, 7:10-35. For example, in Chapter 7 of the 2002 Handbook of Photovoltaics Science and Engineering, Luque described that screen printing "is used to stick a paste containing ***silver*** powder to the front surface of the wafer in the comblike (finger plus bus bars) pattern." EX1019, 275. "The same operations are performed on the backside of the cell, except that the

paste contains both silver and aluminum." EX1019, 275. Luque explains that "a paste for the metallic contacts of the solar cell is composed of the following: … *Conducting material*, which is a powder of ***silver***." EX1019, 277.

166. Froitzheim likewise discloses that its screen printed contacts contain silver (and aluminum, for rear contacts). EX1006, ¶¶49,60. Froitzheim further taught in the alternative of FIG. 3 that "less material such as Ag [silver metal] or Al [aluminum metal] is required for the contacts" on the backside, which further confirms that the contacts are metal. EX1006, ¶20. The front and back contacts in Gan are also metal. EX1007, 246.

### *f) [9f] Configured to power external circuit*

167. Claim 9 recites: "*the first metal contact and the second metal contact being configured to allow an external electrical circuit to be powered by the solar cell.*" This element is met by the solar cell of the modified Froitzheim/Gan solar cell and merely states the well known functional purpose of the front and back metal contacts of solar cells, which is to power an external electrical circuit—which is the objective of the front and back contacts in any solar cell.

168. Froitzheim disclosed: "Front and rear side contacts are arranged that are in electrical connection with the n-doped layer and the p-doped base layer, respectively, **to withdraw a photocurrent from both sides of the p/n-junction**" and thereby are configured to power an external circuit. EX1006, ¶2. A solar cell

absorber (the n-Si substrate in this case) can absorb photons of sunlight with an energy greater than the bandgap. This creates electron-hole pairs and develops a voltage across the pn junction. This drives the electrons towards the n region and the holes towards the p region. (Since electrons and holes have opposite charge and move in opposite directions, the electron and hole currents are additive.) This leads to a photocurrent that can flow out of the cell through the electrical contacts to the n and p regions of the cell to the external electrical circuit. The photocurrent Froitzheim refers to is the current generated by the solar cell's absorption of light that allows the solar cell to power an external circuit, and this current is carried through the front and back metal contacts. It was well known that the object of the solar cell is to power an external circuit.

169. To test the current output and the efficiency of the solar cell, Froitzheim disclosed that "[t]he final solar cells have been investigated by current-voltage (I-V) and internal quantum efficiency (IQE) measurements." EX1006, ¶55. To do this test, measurement instruments are hooked up to the front and back metal contacts of the solar cell to measure the amount of current generated by the solar cell. The fact that Froitzheim were able to conduct such measurements indicate that the metal contacts were configured to be able to power an external circuit, such as a electrical device. These measurements are done by electronic metrology equipment such as ammeters or voltmeters, which mimics the ability of the solar

cell to power external electrical devices such as a computer, calculator, heater, etc. Thus, the Skilled Artisan would understand that the Froitzheim solar cell, as modified by Gan, would have metal contacts that are configured to power an external circuit.

170. Thus, the combination of Froitzheim/Gan met all elements of claim 9 as shown above.

171. To the extent that an argument is made that Froitzheim did not disclose metal contacts configured to power an external circuit, this would have been obvious to the Skilled Artisan long before 2008. As I discussed above, Meier explained the background art of solar cell, saying "[s]olar cells are widely used because they convert easily accessible energy from a light source, such as the sun, to electrical power to operate electrically driven devices, e.g., calculators, computers, and heaters used in homes." EX1011, 1:15-18. "Calculators, computers and heaters" are all external electrical circuits when connected to the solar cell. The 516 Patent states that "[s]olar cells are well known devices for converting solar radiation to electrical energy" and "[t]he metal contacts allow an external electrical circuit to be coupled to and be powered by the solar cell." EX1001, 1:19-30. Meier, like Froitzheim, disclosed a back junction solar cell, and the combination of Meier's teaching of the function of solar cells, with Froitzheim and Gan would have rendered this last element of claim 9 obvious.

### 2. Claim 10

172. Claim 10 depends from claim 9 and further requires "*an antireflective layer over the textured front surface of the substrate*." The 516 Patent discloses silicon nitride as an antireflective layer. EX1001, 2:50-56.

173. Froitzheim likewise disclosed that "SiN [silicon nitride] was used in all cases as antireflection as well as surface passivation coating for n- and p-type silicon." EX1006, ¶60. Froitzheim further disclosed using silicon nitride for the front surface passivation, which naturally would be antireflective as well. *Id*., ¶¶19, 30-31. It was well known in the art that silicon nitride layers have the unique capability of combining both antireflection and passivation functions. For example, Duerinckx disclosed in 2002: "The hydrogen containing silicon nitride layers are becoming widely introduced in industrial crystalline silicon solar cell processes thanks to the unique possibility of combining in one processing step an antireflection coating deposition along with surface and bulk passivation." EX1022, 232. Luque disclosed the same. EX1019, 283-284. Froitzheim also disclosed that the anti-reflection coating is applied after the steps of texturing and front dopant diffusion in the manufacturing process. *Id.,* ¶¶38-39, 50. Thus, the Skilled Artisan would understand that the antireflective layer would be formed over the *textured front surface* of the substrate because it is applied after texturing and diffusion of the front dopants. This must be the sequence because if the anti-

reflective layer is applied first, it would prevent the texturizing chemicals from accessing the Si surface. This understanding is consistent with other prior art.

174. Because the Froitzheim/Gan combination merely replaces the diffused emitter in Froitzheim with a polysilicon emitter with interfacial oxide layer, as taught by Gan, the combination similarly meets this element in claim 10.

**3. Claim 11**

175. Claim 11 depends from claim 9 and recites: "*wherein the substrate comprises an N-type silicon substrate and the emitter layer comprises a P-type doped polysilicon*."

176. Froitzheim used an *N-type silicon substrate*. EX1006, ¶24. Froitzheim's emitter layer comprised P-type doped silicon. EX1006, ¶¶25-26. As discussed, in the combination of Froitzheim/Gan, Froitzheim's p-type diffused emitter would be replaced with a p-type *poly*silicon emitter as taught by Gan. Because the Froitzheim/Gan combination merely replaces the diffused emitter in Froitzheim with a polysilicon emitter with interfacial oxide layer, as taught by Gan, without changing the dopant type, the combination similarly meets this element in claim 11.

### 4. Claim 12

177. Claim 12 depends from claim 9 and recites: "*wherein the second metal contact comprises silver formed over a layer of silicon dioxide*." Froitzheim also disclosed this element.

178. First, as I discussed in ¶¶164-167, Froitzheim disclosed that its rear contacts are metal contacts that comprise *silver and aluminum*. EX1006 ¶¶49, 60.

179. Second, FIG. 3 of Froitzheim disclosed an alternative embodiment of the back contacts 35 (yellow) where only a portion of the back is screen-printed and a layer 34 is also present at the backside. EX1006, ¶33. "In this way, less material such as ***Ag [i.e., silver]*** or Al [i.e., aluminum] is required for the contacts, which could have the shape of a finger structure." EX1006, ¶20. Layer 34 in FIG. 3 is identified as a passivation layer "for which the same type of layers can be used as for the front side." EX1006, ¶33. Froitzheim expressly disclosed that silicon dioxide ("SiO2") is one of the possible passivation material on the front side, and thus it could also be used for layer 34 on the back side because Froitzheim taught that the same type of passivation layer can be used for both front and back. EX1006, ¶¶19, 30.

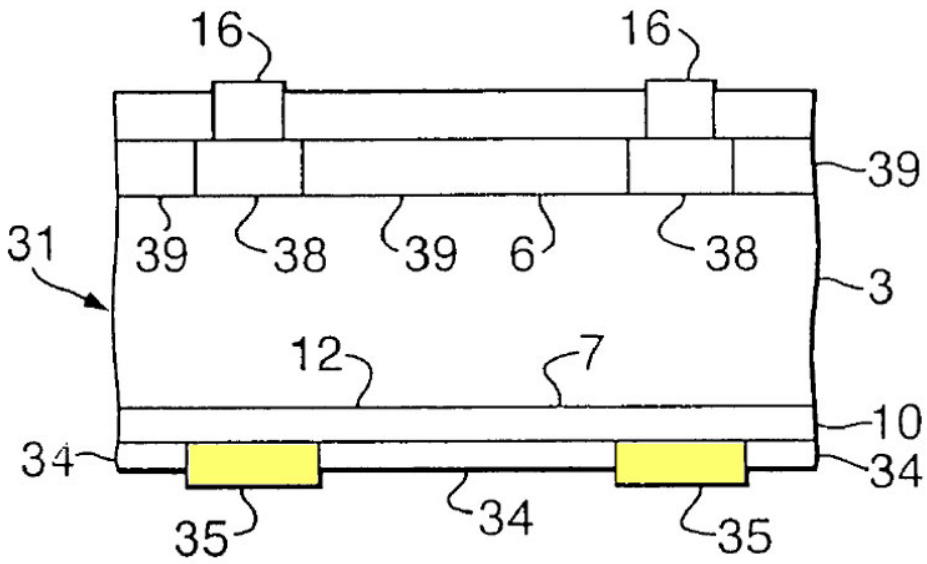


180. Finally, the rear metal contacts (35) in Froitzheim are also formed over a silicon dioxide layer (34) because it disclosed that the rear contacts may be formed *after* a passivation layer of silicon dioxide is deposited. EX1006, ¶¶19,33,50.

181. Because the Froitzheim/Gan combination merely replaces the diffused emitter in Froitzheim with a polysilicon emitter with interfacial oxide layer, as taught by Gan, the combination similarly meets this element in claim 12.

182. To the extent it is argued that the rear finger contacts of Froitzheim are a separate embodiment from that relied upon elsewhere, the Skilled Artisan would have found it obvious to combine the embodiment of Froitzheim Figure 1 with the disclosed rear contact fingers and passivation because "less material such as Ag [*i.e.*, silver] or Al is required for the contacts." EX1006, ¶¶20, 33. A Skilled Artisan would have a reasonable expectation of success making this predictable

adaptation. Such modification with screen printing technology would have been within the level of skill of the Skilled Artisan. EX1006, ¶33; EX1019, 272-273.

## VII. CLAIMS 9-12 ARE UNPATENTABLE OVER FROITZHEIM AND KWARK

183. In my opinion, Claim 9-12 would have been rendered obvious by the combination of Froitzheim and Kwark as well. Froitzheim disclosed all the elements of claims 9-12 except for the (1) polysilicon emitter in claim 11 and (2) the oxide layer in between the polysilicon and substrate in claim (9). However, just as taught by Gan, Kwark similarly would have supplied these two missing elements, and the Skilled Artisan would be motivated combine Froitzheim and Kwark with a reasonable expectation of success in modifying Froitzheim solar cell to include these two elements.

### A. Kwark (EX1008) Overview

184. Kwark is titled "SIPOS Heterojunction contacts to silicon," and published in the International Electron Devices Meeting (1984): 742-745 ("Kwark"). I understand from counsel for CSI that Kwark is prior art.

185. In addition to SIPOS layers, Kwark tested polysilicon films with and without an intervening chemically grown oxide layer, and found that the oxide layer greatly decreased emitter saturation current—a characteristic Kwark noted translates into potential improvements for solar cell efficiency (EX1008, 742). Specifically, Kwark reported that addition of "POLY" (*i.e.*, polysilicon emitter)

*without* the "chemox" (*i.e.*, chemically formed oxide layer) "does not greatly impact $J_{oe}$ as would be expected" where $J_{oe}$ was a measure of emitter saturation current and solar cell recombination. ***However*, *when the chemically formed oxide layer was present, it "greatly decrease[d] the $J_{oe}$ as has been previously reported*.**" EX1008, 743 (emphasis added). $J_{oe}$ is the same as $J_o$ that I discussed above as the measurement of saturation current. And the lower the $J_{oe}$ or $J_o$ number, the better because it tends to increase Voc and therefore solar cell efficiency. Kwark illustrated this decrease in $J_{oe}$ with the "chemox" in Figure 4:

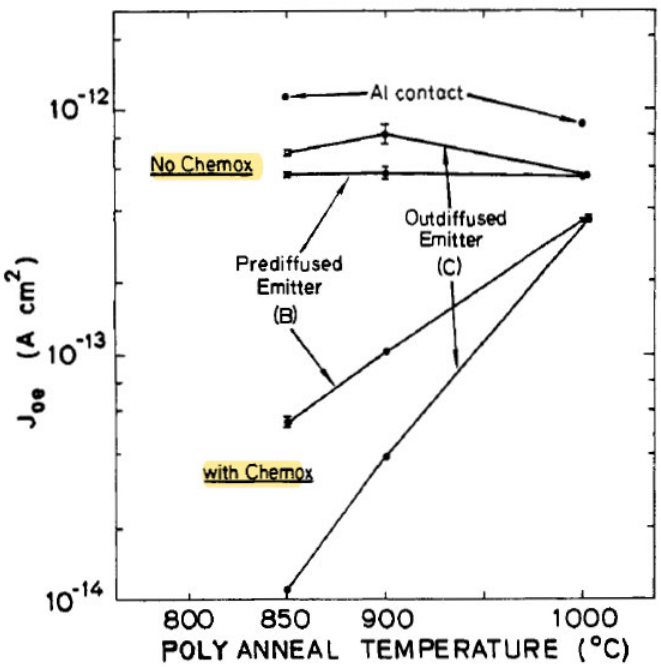


Fig. 4: emitter saturation current for POLY contacts with and without a chemically grown interfacial layer vs. anneal temperature. Thicknesses range from 3000-3600 angstroms. Note the large difference when the interfacial oxide is missing.

186. Based on Kwark's teaching, it would be obvious to the Skilled Artisan to replace Froitzheim's p-type *diffused* emitter with a p-type *polysilicon* emitter along with an interfacial oxide layer between the emitter and the substrate, as taught by Kwark.

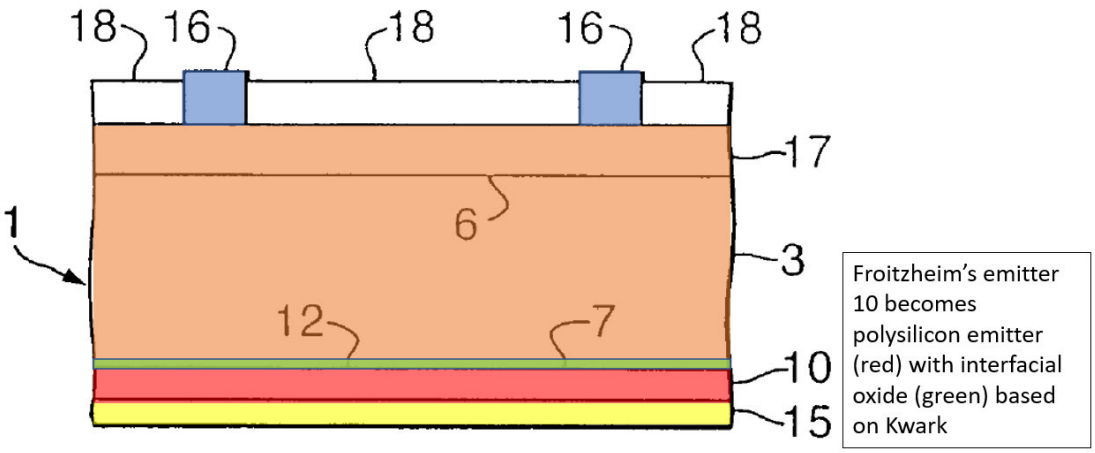


**B. <u>Motivation to Modify Froitzheim with Kwark</u>**

187. Froitzheim and Kwark are analogous art because each is in the same field of endeavor—solar cell design. EX1001, 1:15-17; EX1006, Abstract, ¶¶1,9; EX1008, 742. Each is also reasonably pertinent to the problems of efficiencies and cost-effectiveness in solar cell designs. EX1001, 1:40-42; EX1006, Abstract, ¶¶1,9; EX1008, 742. To the extent it is argued Kwark is directed to a bipolar transistor, the Skilled Artisan would have looked to it when designing solar cells as was commonly done in the art. EX1020, 363; EX1021, 497; EX1007, 245; EX1016, 597

188. The Skilled Artisan would have been motivated to modify Froitzheim's emitter to be a polysilicon emitter with an oxide layer because Kwark taught and suggested that this modification would be an improvement. Kwark first taught that replacing the conventional emitter with an "SIPOS" emitter "has been previously shown to reduce the emitter saturation current, Joe, by at least a factor of fifty." EX1008 (Abstract). Kwark then showed that using pure polysilicon emitter produced "surprising[ly]" similar "good results" as the SIPOS emitter. EX1008, 742. Kwark further taught, with supporting data in FIG. 4, that the addition of an interfacial chemically grown oxide (chemox) between the polysilicon emitter and the substrate "greatly decreases the $J_{oe}$," which "translates into potential improvements of energy conversion efficiency for solar cells." EX1008, 742, 745.

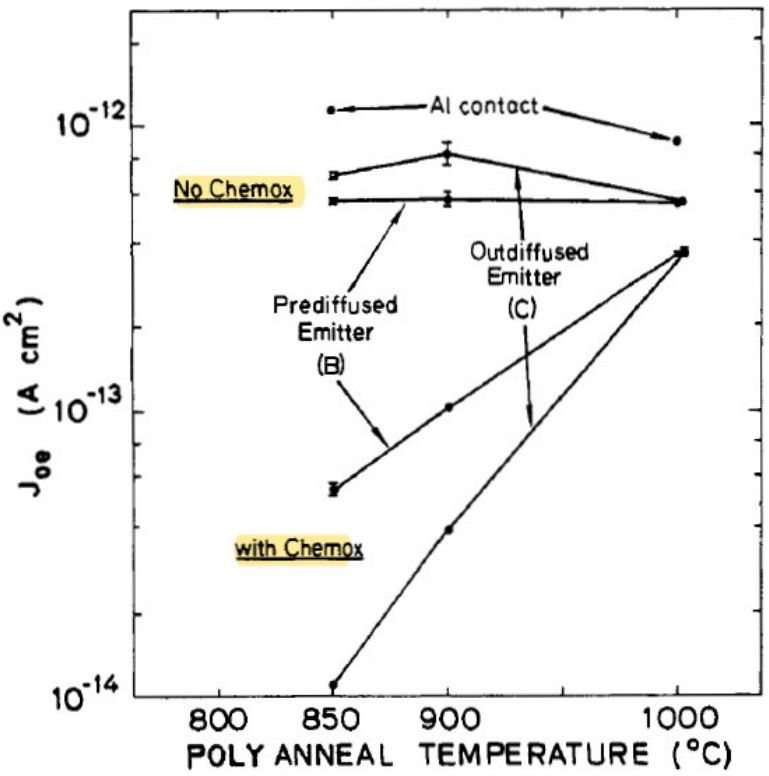


Fig. 4: emitter saturation current for POLY contacts with and without a chemically grown interfacial layer vs. anneal temperature. Thicknesses range from 3000-3600 angstroms. Note the large difference when the interfacial oxide is missing.

189. The teachings of Gan, Foglietti, and Borden that I discussed in ¶¶145-151 would similarly have motivated a Skilled Artisan to integrate a polysilicon emitter with interfacial oxide layer in Froitzheim in view of Kwark.

### C. Reasonable Expectation of Success

190. The Skilled Artisan would have considered the Froitzheim/Kwark combination to be merely an arrangement of old elements with each performing the same function it had been known to perform (the emitter of Froitzheim continuing to act as an emitter, but modified to be polysilicon with an interfacial

oxide) and yielding no more than what one would expect from such an modification as taught by Kwark (a solar cell with improved performance).

191. Combining Froitzheim/Kwark as described here would have been well within the level of skill of the Skilled Artisan and would not have resulted in any unpredictable results. It could have been readily accomplished without undue experimentation and with a reasonable expectation of success. The combination would simply have been the replacing the steps of forming the emitter layer in Froitzheim with the steps for forming the oxide layer and polysilicon emitter layer, as taught by Kwark, and yielding a p+ polysilicon emitter layer with an interfacial oxide layer. The combination of these prior art elements according to known methods would yield predictable results. Likewise, substituting Froitzheim's diffused emitter with a polysilicon emitter and oxide layer would be simple substitution of one known element for another to obtain predictable results. It would further constitute use of a known technique (polysilicon emitters with an oxide layer) to improve similar devices (Froitzheim's solar cell) in the same way. It would also constitute applying a known technique to a known device ready for improvement to yield predictable results.

### D. <u>Froitzheim and Kwark Disclosed All Elements</u>

192. For the same reasons that I discussed in ¶¶156-182, Froitzheim disclosed all elements of claims 9-12, except for the (1) polysilicon emitter in

claim 11 and (2) *[9c]* the oxide layer in between the polysilicon and substrate in claim 9.

***a) [9.b] Back emitter and claim 11's polysilicon emitter***

193. Froitzheim disclosed "*an emitter layer formed over a back surface of the substrate, the emitter layer forming a backside junction with the substrate*," as recited in claim 9. This is shown by red p-doped emitter 10 (red) in the figure below forming PN junction 12 on the backside of the solar cell (*backside junction*). EX1006, ¶¶24-27.

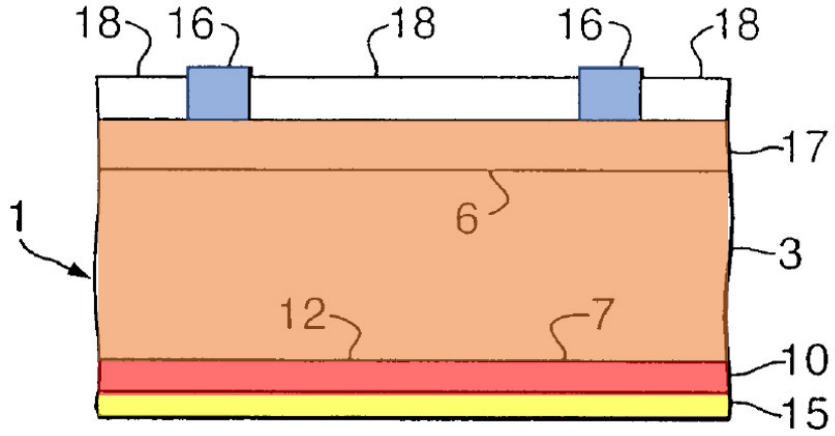


194. Claim 11 requires the "*emitter layer*" to a "*polysilicon layer*." In the Froitzheim/Kwark combination, Froitzheim's diffused p-doped emitter is replaced with a p-doped polysilicon emitter as taught by Kwark. This modified polysilicon emitter meets the claim as it is *formed over a back surface of the substrate* and forms *a backside junction* (PN junction) 12 with the substrate. Thus, the Froitzheim/Kwark combination meets claim 11's requirement of a polysilicon emitter.

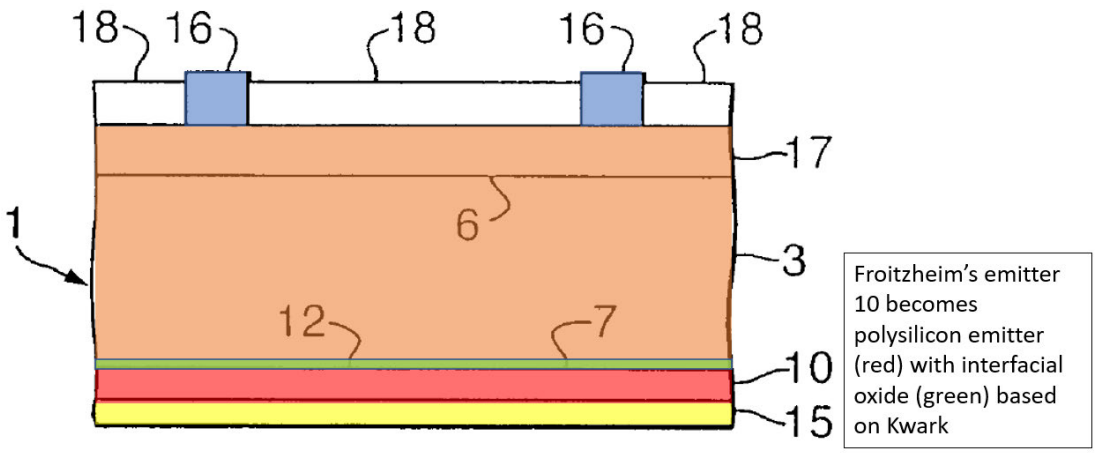


***b) [9.c] Oxide layer***

195. Froitzheim does not disclose "*an oxide layer formed between the back surface of the substrate and the emitter layer*." However, as I discussed in ¶¶188-190, the Skilled Artisan would be motivated to modify Froitzheim with a polysilicon layer and include an oxide layer in between because of the improvement in solar cell that it can achieve, as taught by Kwark. With supporting data in FIG. 4, Kwark showed that with an intervening chemically grown oxide layer, the emitter saturation current was greatly decreased—a characteristic that Kwark noted translates into potential improvements for solar cell efficiency (EX1008, 742). The Skilled Artisan would also reasonably expect to succeed in making this combination as I discussed in ¶¶191-192. Thus, the combination of Froitzheim and Kwark would have rendered claims 9-12 obvious.

## VIII. CLAIMS 9-12 ARE UNPATENTABLE OVER FROITZHEIM IN VIEW OF BORDEN

196. In my opinion, Claims 9-12 would have been rendered obvious by the combination of Froitzheim and Borden as well. Like Gan and Kwark, Borden taught the use of an interfacial oxide layer in between a polysilicon emitter and substrate, and it would have been obvious to replace the backside diffused emitter of Froitzheim with the polysilicon layer and interfacial oxide layer, as taught by Borden.

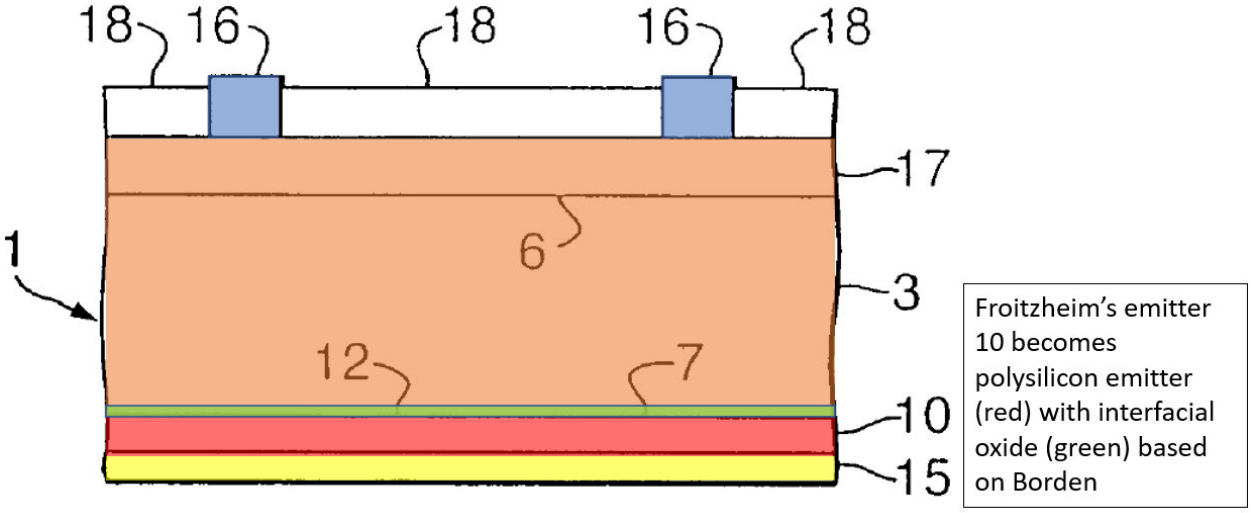


### A. <u>Motivation to Modify Froitzheim with Borden</u>

197. Froitzheim and Borden are analogous art because each is in the same field of solar cell design. EX1006, Abstract, ¶¶1,9; EX1009, ¶16. Each is also reasonably pertinent to addressing the problems of solar cell designs. EX1006, Abstract, ¶¶1,9; EX1009, ¶16.

198. The Skilled Artisan would have been motivated to modify Froitzheim's emitter to be a polysilicon emitter with an oxide layer because polysilicon emitter increases solar cell efficiency as previously taught by Gan and Kwark and Borden taught that the oxide layer "prevents epitaxial growth," allowing for "optimum band structure" and "provides a layer to protect the surface from plasma damage." EX1009, Abstract. These benefits apply to both amorphous silicon and polysilicon layers. For example, as already noted, Foglietti likewise taught the benefit of preventing epitaxial realignment in the context of bipolar transistors, which translates to solar cells, as I discussed in ¶¶126-127, 149 above. EX1014, ¶¶8-9,28,46. As I discussed in ¶¶144-151, the teachings of Gan, Foglietti, Kwark, and Borden would similarly have motivated the Skilled Artisan to integrate a polysilicon emitter with interfacial oxide layer.

**B. <u>Reasonable Expectation of Success</u>**

199. The Skilled Artisan would have considered the Froitzheim/Borden combination to be merely an arrangement of old elements with each performing the same function it had been known to perform and yielding no more than what one would expect from such an arrangement. Combining Froitzheim/Borden as described here would also have been well within the level of skill of the Skilled Artisan, would not have resulted in any unpredictable results and could have been readily accomplished without undue experimentation and with a reasonable

expectation of success. It constitutes nothing more than applying a known technique to a known device ready for improvement to yield predictable results.

### C. <u>Froitzheim and Borden Disclosed All Elements</u>

200. For the same reasons that I discussed in ¶¶156-183, Froitzheim disclosed all elements of claims 9-12, except for the (1) polysilicon emitter in claim 11 and (2) *[9c]* the oxide layer in between the polysilicon and susbtrate in claim (9).:

#### *a) [9.b] Back emitter and claim 11's polysilicon emitter*

201. In the Froitzheim/Borden combination, Froitzheim's backside p+ emitter layer is replaced with a p+ polysilicon emitter and oxide layer as taught by Borden. This modified emitter meets the claim as it is *formed over a back surface of the substrate* and forms *a backside junction* (PN junction) 12 with the substrate.

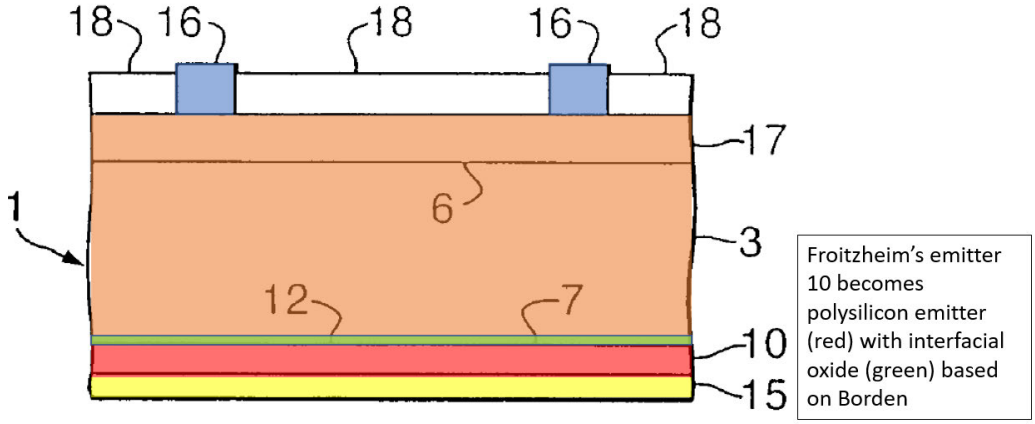


#### *b) [9.d] Oxide layer*

202. While Froitzheim did not disclose an intervening oxide layer, Borden did. Borden disclosed "that tunnel oxides can be used between a heavily doped or

insulating layer of polysilicon and a crystal silicon substrate, forming a polysilicon emitter solar cell." EX1009, ¶16. The Skilled Artisan would have been motivated to include an interfacial oxide layer in a modified Froitzheim because it "prevents epitaxial growth," allowing for "optimum band structure" and "provides a layer to protect the surface from plasma damage," as taught by Borden. EX1009, Abstract.

## IX. OBJECTIVE FACTORS SUPPORT OBVIOUSNESS

### A. No Commercial Success Attributable to the 516 Patent

203. I have not seen any evidence of commercial success attributable to the '516 Patent claims. I understand that the current patent owner, Maxeon, was spun out from SunPower that originally owned the 516 Patent.[1] EX1030, 1035.

204. I have reviewed the virtual patent marking webpages of both Maxeon and SunPower, and the 516 Patent is not included in either listing of patents by Maxeon or SunPower. EX1033; EX1034.[2] This leads me to conclude that neither Maxeon nor SunPower is practicing the 516 Patent.

---

[1] https://newsroom.sunpower.com/2020-08-27-SunPower-and-Maxeon-Solar-Technologies-Close-Spin-Off-Transaction; https://mediaroom.maxeon.com/2020-08-27-SunPower-and-Maxeon-Solar-Technologies-Close-Spin-Off-Transaction.

[2] https://us.sunpower.com/solar-panels-technology/patents; https://corp.maxeon.com/patents

205. Moreover, I have been in working in the solar cell research for over 15 years. That neither Maxeon nor SunPower is practicing the 516 Patent is consistent with my understanding, based on my experience in this field and what I have read and reviewed over the years, because SunPower's and Maxeon's commercial products are mainly *back-contact* solar cells, rather than *front contact* solar cells, as claimed in the 516 Patent. EX1036.[3] Back contact solar cells have both first and second metal contacts only on the backside, unlike the claimed invention of the 516 Patent that requires front metal contacts and back metal contacts. Below is a basic schematic diagram of a back-contact solar cell as shown, for example, in a 2002 Handbook of Photovoltaics Science and Engineering, Chapter 3:

[3]https://sunpower.maxeon.com/int/solar-panel-products/maxeon-solar-panels

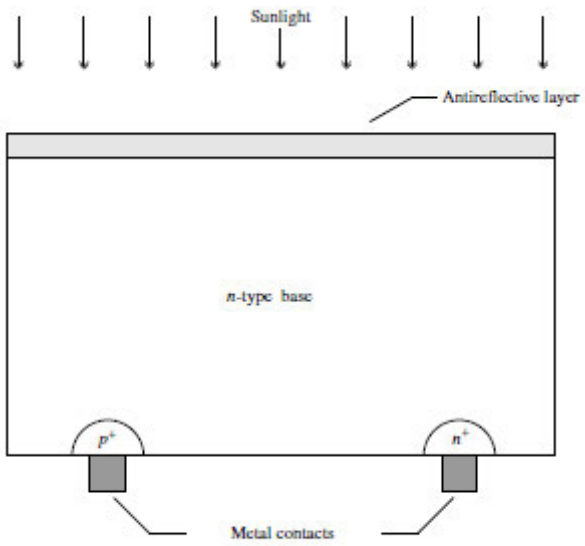


**Figure 3.26** Schematic of a back-contact solar cell

EX1019, 108.

206. As seen from the schematic above, the metal contacts for both positive and negative polarity are at the back side of the solar cell and no metal contacts are on the front side.

207. For example, Maxeon touts the advantage of its commercial solar panel products as "us[ing] back-contact conductivity, eliminating unsightly metal gridlines and enabling them to absorb more light" because there are no front metal contacts:

EX1036.

208. I understand that Maxeon has filed suit against CSI and others in the solar industry asserting that the 516 Patent covers TOPCon solar cells. TOPCon stands for "Tunnel Oxide Passivated Contact." To the extent that Maxeon argues commercial success based on the TOPCon solar cells, there is also no causal connection between TOPCon solar cells and the 516 Patent. The TOPCon cell design does not practice the 516 Patent because ***it does not have an emitter layer on the backside that forms a backside junction with the substrate***, as required by independent claim 9 of the 516 Patent.

209. The "TOPCon" solar cell design was initially described by researchers from the Fraunhofer Institute for Solar Energy Systems ("Fraunhofer Institute") in 2013 a solar cell design based on prior art approaches using polysilicon emitter solar cells that I discussed, for example, in ¶¶57-65. This TOPCon solar cell design was published in Feldman, et al., "A Passivated Rear Contact for High-

Efficiency n-Type Silicon Solar Cells Enabling High VocS and FF > 82%" at 1 (28th European PV Solar Energy Conference & Exhibition, Paris, Sept. 30 – Oct. 4, 2013) ("Feldman Paper"). EX1037.

210. As described by the Feldman Paper, the TOPCon solar cell "consists of an ultra-thin tunnel oxide and *phosphorus-doped* silicon layer" formed on the backside of an *n-type silicon base substrate*, as shown in Figure 3 of the Feldman Paper and reproduced below.

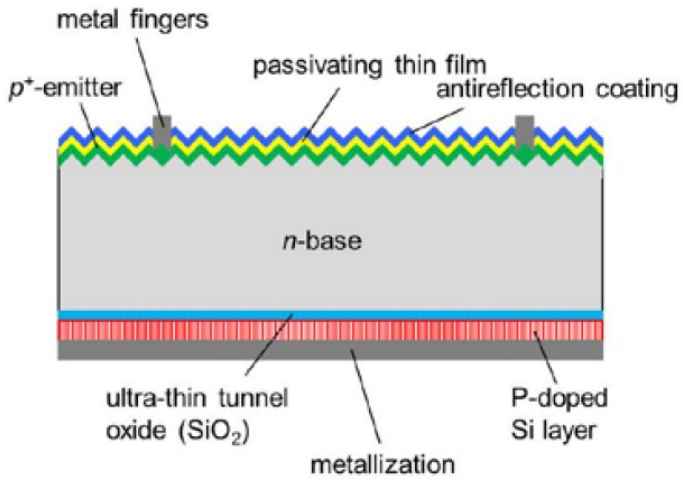


**Figure 3:** Solar cell with boron-doped emitter at the front and passivated rear contacts.

EX1037, 1, Fig. 3.

211. The back side layer of Figure 3 of Feldman is labeled "P-doped Si layer," and the text is clear that "P" in this figure is referring to phosphorus. In multiple places, Feldman describes this silicon layer as being "phosphorus-doped." For example, Feldman describes: "Our approach, which we have called TOPCon (Tunnel Oxide Passivated Contact) is based on these prior approaches and consists

of an ultra-thin tunnel oxide and a phosphorus-doped silicon layer." EX1037, 1. In its summary, Feldman again describes: "A thermally stable passivated contact for the rear side base contact of n-type silicon solar cells has been presented. It has been shown that our TOPCon structure based on a tunnel oxide and phosphorus doped Si layer passivates the surface effectively for both MPP and OC conditions and enables the extraction of Vocs higher than 710mV." EX1037, 4.

212. Because phosphorus is an n-type dopant, and has the same dopant polarity as the n-type substrate, the "phosphorus-doped silicon layer" on the backside of the TOPCon solar cell forms a ***back surface field ("BSF")*** layer with the n-type substrate because the dopant type of the "phosphorus-doped silicon layer" is the same as the dopant type of the n-type substrate. They both have n-type dopants.

213. In contrast, a backside junction, like in the back junction solar cells of Meier and Froitzheim that I discussed in ¶¶78-79 and 136-140, is formed with opposite dopant types. The 516 Patent also describes that "a backside junction [is] formed by an N-type silicon substrate and a P-type polysilicon emitter on the backside of the solar cell." EX1001, Abstract and 1:46-48. A back surface field layer cannot form a backside junction with the substrate because it has the same polarity as the substrate. And back surface field layer has a different function and structure compared to a backside junction because a back surface field repels

minority carriers in the solar cells, while the backside junction collects minority carriers in the solar cells.

214. My opinion is confirmed by the Applicant's own statements made during prosecution of continuation applications to the 516 Patent. For example, during the prosecution of US8,878,053 ("the 053 Patent"), which is the continuation of the 516 Patent, the Applicant said the same thing that I am saying now: "As is well known, a BSF [i.e., back surface field] has the same dopant type as the substrate, but at a higher concentration to keep minority charge carriers away from the back surface." EX1038, 217. The Applicant in this continuation patent distinguished the prior art used by the Examiner to reject the claims during that prosecution, saying that in the prior art "the polysilicon forms a BSF with the substrate, as opposed to a backside junction with the substrate." EX1038, 218.

215. Based on the argument distinguishing a back surface field and a backside junction, the Examiner of the '053 Patent allowed the claims. In the examiner's Notice of Allowability dated June 10, 2014, the examiner stated his "Reasons for Allowance" as follows:

> The following is an examiner's statement of reasons for allowance: The prior art of record lacks the instantly claimed backside junction formed at the interface of a first material of a silicon substrate comprising ***one dopant type*** and a second material of a polysilicon layer of an ***opposite dopant type***.

> Furthermore the backside junction is formed on the backside of the solar cell which is opposite to the light incident front side of the solar cell. Silvestre is the closest prior art, but no fair reason or motivation to modify the solar cell of Silvestre to include the backside junction as claimed. Therefore the instant invention as claimed is considered patentable over the prior art.

EX1038, 250.

216. Likewise, during prosecution of the 771 Application, which is a continuation of the 053 Patent, the Applicant again drew the same distinction between a backside junction and a back surface field based on the polarity of the dopants, a distinction that was well known in the industry. For example, in its appeal brief to the PTAB for the 771 Application, the Applicant argued:

> Okayasu discloses a manufacturing method for a BSF type solar cell. ***As is well known, a BSF layer is a backside layer that has the same polarity as the substrate.*** That is, an n-type substrate would have an n-type BSF layer, and a p-type substrate would have a p-type BSF layer (Okayasu, paragraph [0008]). ***More particularly, a BSF layer cannot form a backside junction with the substrate because it has the same polarity as the substrate.***

EX1005, 461 (emphasis added). Again, in its Reply Brief in the 771 Application, the Applicant against made the distinction between a back surface field and a backside junction:

> A BSF layer forms a high-low (HL) junction, i.e., the highly doped and lightly doped layers of the BSF have the ***same polarity*** on the ***backside*** of the solar cell (Okayasu, paragraph 14) This is opposite to a backside junction, whose layers have ***opposite polarity*** on the ***backside*** of the solar cell.

EX1005, 496 (emphasis in original). These statements by the Applicant expressed the same understanding of the Skilled Artisan that a backside junction is different from a back surface field, and that a backside junction is formed by the substrate and the backside emitter layer that have opposite dopant polarities, just as described in the 516 Patent, Meier, and Froitzheim.

217. The TOPCon solar cell design has a back surface field, rather than a backside junction, and therefore cannot support any assertion of commercial success attributable to the 516 Patent.

**B. <u>No Evidence of Unexpected Results</u>**

218. There is no unexpected result in replacing the backside diffused emitter in a back junction solar cell like Meier and Froitzheim with a polysilicon emitter having an interfacial oxide layer in between. The Skilled Artisan would have reasonably expected to reap the many benefits from such a modification such

as higher solar cell efficiencies and lower recombination, as taught by the prior art such as Kwark and Gan. And including a oxide layer between the polysilicon layer and the substrate was well-known to confer expected benefits as well, as I discussed in ¶¶58-65, 82, 126-129, 185-187. Making such a modification to Meier and Froitzheim would have been simply following the conventional wisdom, as taught in the prior art.

**APPENDIX A: Table Comparing Claims 9-12 of 516 Patent to Claims of 771 Application and 035 Application**

**APPENDIX B: List of Exhibits Considered**

## APPENDIX A

## Comparing Claims 9-12 of 516 Patent to

## Claims of 771 Application and 035 Application

| '516 Patent Claims 9-12 | '771 Application Claims 1-2, 4, 7 | '035 Application Claims 21, 23-25 |
|---|---|---|
| 9. A solar cell having a front side facing the sun to collect solar radiation during normal operation and a backside opposite the front side, the solar cell comprising:<br>[9a] a substrate having a textured front surface: | 1. A solar cell, comprising:<br>a substrate having a front surface that faces the sun to collect solar radiation during normal operation and a back surface opposite the front surface; | 21. A solar cell, the solar cell comprising:<br>a N-type silicon substrate having a front surface and a back surface, wherein the front surface comprises a textured surface; |
| *[Claim 10. The solar cell of claim 9 further comprising an antireflective layer over the textured front surface of the substrate.]* | [1] an oxide layer disposed on the front surface of the substrate; an anti-reflective coating on the oxide layer; | [21] an antireflective layer over the front surface of the N-type silicon substrate |
| | | [21] a plurality of dot-shaped N-type doped regions in the N-type silicon substrate |

| **'516 Patent Claims 9-12** | **'771 Application Claims 1-2, 4, 7** | **'035 Application Claims 21, 23-25** |
|---|---|---|
| | | under the antireflective layer, each of the plurality of dot-shaped doped regions having a dot shape as seen from a plan view of the solar cell; |
| [9b] an emitter layer formed over a back surface of the substrate, the emitter layer forming a backside junction with the substrate;<br>[9c] an oxide layer formed between the back surface of the substrate and the emitter layer; | [1] a tunnel dielectric disposed over the back surface of the substrate; an emitter disposed over the tunnel dielectric, the emitter forming a backside junction with the substrate;<br>[*4. The solar cell of claim 1, wherein the tunnel dielectric is a tunnel oxide*] | [21] an oxide region disposed over the back surface of the N-type silicon substrate;<br>a polysilicon emitter disposed over the oxide region; |
| | [1] a doped diffusion region in the substrate; | |
| [9d] a first metal contact making an electrical connection to the | [1] a front electrode that is coupled to the doped diffusion region on the | [21] a first metal contact disposed on the front surface of the N-type silicon substrate, wherein |

| **'516 Patent Claims 9-12** | **'771 Application Claims 1-2, 4, 7** | **'035 Application Claims 21, 23-25** |
|---|---|---|
| substrate on the front side of the solar cell; and | front surface of the substrate; and | the first metal contact is in electrical contact with the plurality of dot-shaped N-type doped regions; and |
| [9e] a second metal contact making an electrical connection to the emitter layer on the backside of the solar cell, | [1] a back electrode that is coupled to the emitter on the back surface of the substrate. | [21] a second metal contact disposed on the polysilicon emitter. |
| [9f] the first metal contact and the second metal contact being configured to allow an external electrical circuit to be powered by the solar cell. | | |
| 11 The solar cell of claim 9 wherein the substrate comprises an N-type silicon substrate and the emitter layer comprises a P-type doped polysilicon | 2. The solar cell of claim 1, wherein the emitter is a polysilicon emitter. | 23. The solar cell of claim 21, wherein the polysilicon emitter comprises a P-type doped polysilicon. |
| 12 The solar cell of claim 9 wherein the second metal contact comprises | 7. The solar cell of claim 1, wherein the back electrode includes silver. | 24. The solar cell of claim 21, further comprising a |

| **'516 Patent Claims 9-12** | **'771 Application Claims 1-2, 4, 7** | **'035 Application Claims 21, 23-25** |
|---|---|---|
| silver formed over a layer of silicon dioxide | | dielectric layer over the polysilicon emitter.<br>25. The solar cell of claim 24, wherein the dielectric layer comprises silicon dioxide. |

# APPENDIX B

## List of Exhibits Considered

| Exhibit # | Reference Name |
|---|---|
| 1001 | U.S. Patent No. 8,222,516 ("516 Patent") |
| 1002 | File History of U.S. Patent No. 8,222,516 |
| 1005 | File History of U.S. Patent Application No. 14/504,771 ("771 Application") |
| 1006 | EP1732142A1 to Armin Froitzheim ("Froitzheim") |
| 1007 | J.Y. Gan et al., "Polysilicon Emitters for Silicon Concentrator Solar cells," May 1990, Proceedings of the 21st IEEE-PVSC ("Gan") |
| 1008 | Kwark, Y. H. et al. "SIPOS Heterojunction contacts to silicon." 1984 International Electron Devices Meeting (1984): 742-745 ("Kwark") |
| 1009 | WO2009/094578 to Borden ("Borden") |
| 1010 | U.S. Provisional Patent Application No. 61/023,342 (EX1010) ("Borden Provisional"), filed January 24, 2008. |
| 1011 | U.S. Patent No. 6,262,359 to Meier ("Meier") |
| 1012 | JP07-106611 to Okayasu ("Okayasu") (Human Translation) |
| 1013 | JP07-106611 to Okayasu ("Okayasu") (Japanese Original) |
| 1014 | U.S. Patent Pub. No. 2002/0142500 to Foglietti |
| 1015 | U.S. Patent Pub. No. 2005/0268963 to Jordan ("Jordan") |
| 1016 | Yablonovitch, Eli et al., "A Study of $n^+$-SIPOA:p-Si Heterojunction Emitters." Nov. 1985, IEEE Election Device Letters, Vol. EDL-6, No. 11 ("Yablonovitch") |
| 1017 | Sinton, R. A. et al., "Design Criteria for Si Point-Contact Concentrator Solar Cells." Oct. 1987, IEEE Trans. on Electron Devices, Vol. ED-34, No. 10 |
| 1018 | File History of U.S. Patent Application No. 16/460,035 ("035 Application") |

| Exhibit # | Reference Name |
|---|---|
| 1019 | Luque, A. et al., "Handbook of Photovoltaic Science and Engineering." Wiley (2003) |
| 1020 | Lindholm, F.A., et al., "Heavily Doped Polysilicon-Contact Solar Cells." July 1985, IEEE Electron Device Letters, Vol. EDL-6, No. 7 |
| 1021 | Silvestre, S. et al., "Series Resistance in Double-Polysilicon-Contacted Silicon Solar Cells." May 13-17, 1996, IEEE 25th PVSC |
| 1022 | Duerinckx, F. et al., "Defect passivation of industrial multicrystalline solar cells based on PECVD silicon nitride." 2002, Elsevier, Solar Energy Materials & Solar Cells |
| 1023 | Ashburn, P. et al., "Comparison of Experimental and Theoretical Results on Polysilicon Emitter Bipolar Transistors." July 1984, IEEE Trans. on Electron Devices, Vol. ED-31, No. 7 |
| 1030 | Press Release, SunPower and Maxeon Solar Technologies Close Spin-Off Transaction, dated Aug. 27, 2020 https://newsroom.sunpower.com/2020-08-27-SunPower-and-Maxeon-Solar-Technologies-Close-Spin-Off-Transaction |
| 1031 | Patent Assignment |
| 1032 | U.S. Patent No. 6,998,288 to Smith ("Smith288") |
| 1033 | SunPower Virtual Patent Marketing https://us.sunpower.com/solar-panels-technology/patents |
| 1034 | Patents \| Maxeon Solar Technologies, Ltd. https://corp.maxeon.com/patents |
| 1035 | Press Release, SunPower and Maxeon Solar Technologies Close Spin-Off Transaction, dated Aug. 27, 2020 https://mediaroom.maxeon.com/2020-08-27-SunPower-and-Maxeon-Solar-Technologies-Close-Spin-Off-Transaction |
| 1036 | SunPower Maxeon Solar Panels https://sunpower.maxeon.com/int/solar-panel-products/maxeon-solar-panels |

| Exhibit # | Reference Name |
|---|---|
| 1037 | Feldman, et al., "A Passivated Rear Contact for High-Efficiency n-Type Silicon Solar Cells Enabling High VocS and FF > 82%" at 1 (28th European PV Solar Energy Conference & Exhibition, Paris, Sept. 30 – Oct. 4, 2013) ("Feldman Paper"). |
| 1038 | File History of U.S. Patent No. 8,878,053 |
| 1039 | Green, M.A. et al., "High Efficiency N-Silicon Solar Cells Using Rear Junction Structures." IEEE (1993) |