US006262359B1

(12) **United States Patent**
Meier et al.

(10) **Patent No.: US 6,262,359 B1**
(45) **Date of Patent: Jul. 17, 2001**

(54) **ALUMINUM ALLOY BACK JUNCTION SOLAR CELL AND A PROCESS FOR FABRICATION THEREOF**

(75) Inventors: **Daniel L. Meier**; **Hubert P. Davis**, both of Pittsburgh; **Ruth A. Garcia**, Irwin; **Jalal Salami**, West Mifflin, all of PA (US)

(73) Assignee: **Ebara Solar, Inc.**, Large, PA (US)

(*) Notice: Subject to any disclaimer, the term of this patent is extended or adjusted under 35 U.S.C. 154(b) by 0 days.

(21) Appl. No.: **09/414,990**

(22) Filed: **Oct. 7, 1999**

Related U.S. Application Data

(60) Provisional application No. 60/124,797, filed on Mar. 17, 1999.

(51) **Int. Cl.**[7] **H01L 31/068**; H01L 31/04

(52) **U.S. Cl.** **136/256**; 136/255; 136/261; 136/258; 257/432; 257/437; 257/461; 257/464; 438/57; 438/69; 438/72; 438/83; 438/89; 438/98

(58) **Field of Search** 136/255, 256, 136/261, 258; 257/432, 437, 461, 464; 438/57, 69, 72, 83, 89, 98

(56) **References Cited**

U.S. PATENT DOCUMENTS

3,895,975	*	7/1975	Lindmayer	136/255
4,056,879	*	11/1977	Lindmayer	438/89
4,106,047	*	8/1978	Lindmayer	136/255
4,131,486	*	12/1978	Brandhorst, Jr.	136/255
4,226,017	*	10/1980	Lindmayer	135/256
4,916,503		4/1990	Uematsu et al.	257/436
5,538,564	*	7/1996	Kaschmitter	136/255
5,641,362	*	6/1997	Meier	136/256
5,951,742	*	10/1999	Tange et al.	136/256
5,973,260	*	10/1999	Tange et al.	136/256
6,071,753	*	6/2000	Arimoto	438/57

FOREIGN PATENT DOCUMENTS

0776051	5/1997	(EP) .
WO 97/13280	4/1997	(WO) .

OTHER PUBLICATIONS

Hu et al, Solar Cells from Basic to Advanced Systems, McGraw–Hill (1983), pp. 81–83.*

Salami, Jalal, et al., *Elsevier Science*, Solar Energy Materials and Solar Cells 48, "Self–aligned locally diffused emitter (SALDE) silicon solar cell," (1997) pp.:159–165.

* cited by examiner

Primary Examiner—Alan Diamond
(74) *Attorney, Agent, or Firm*—Squire, Sanders & Dempsey LLP

(57) **ABSTRACT**

A process for fabricating a solar cell is described. The process includes: (1) providing a base layer, (2) fabricating an emitter layer of p-type conductivity on a same side as the non-illuminated surface of the base layer to provide a strongly doped p-type emitter layer and a p-n junction between the n-type base layer and the p-type emitter layer. The base layer of the present invention has n-type conductivity and is defined by an illuminated surface and a non-illuminated surface. The illuminated surface has light energy impinging thereon when the solar cell is exposed to the light energy and the non-illuminated surface is opposite the illuminated surface.

30 Claims, 3 Drawing Sheets

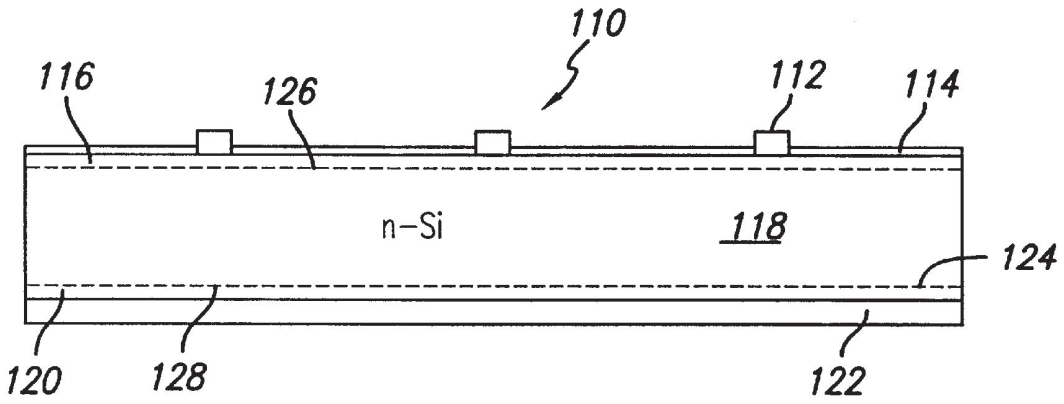

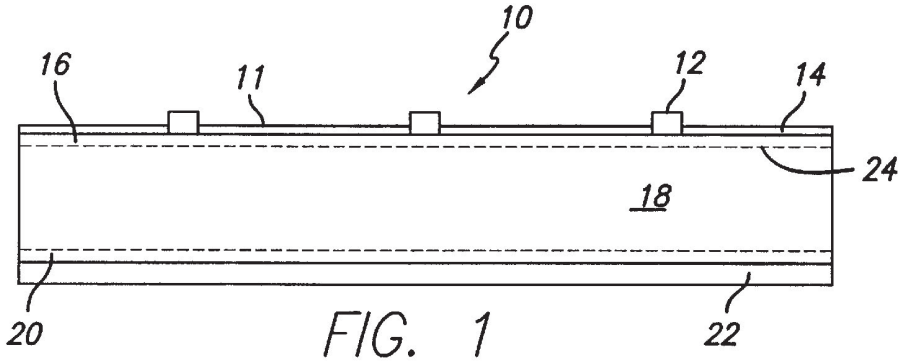

FIG. 1
PRIOR ART

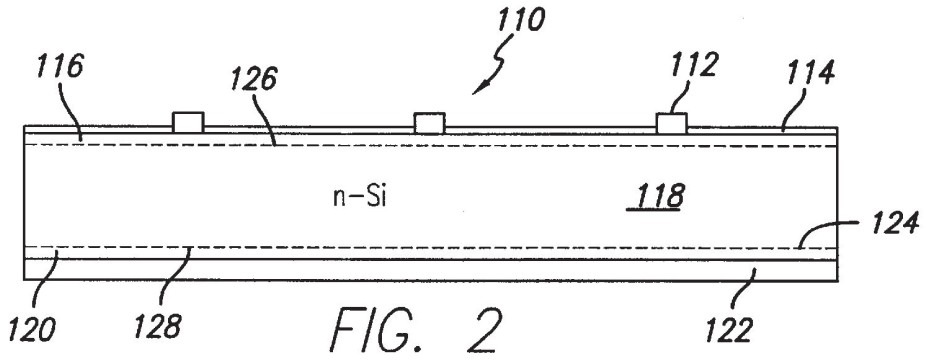

FIG. 2

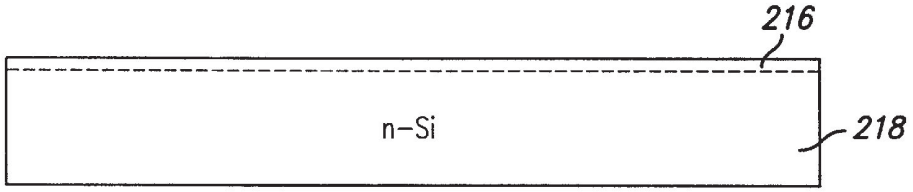

FIG. 3A

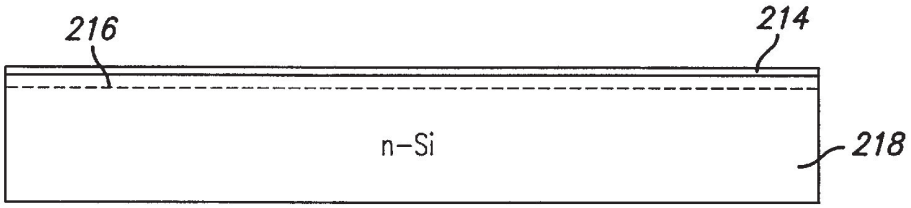

FIG. 3B

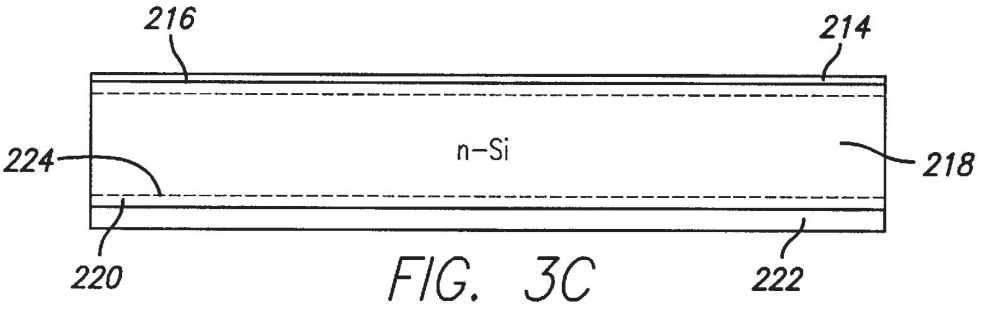

FIG. 3C

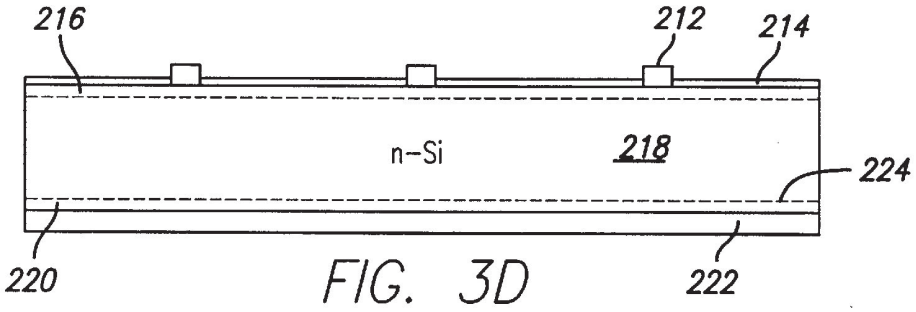

FIG. 3D

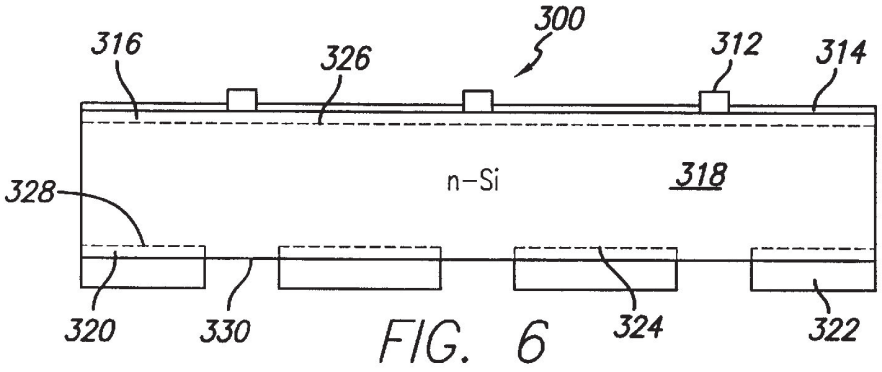

FIG. 6

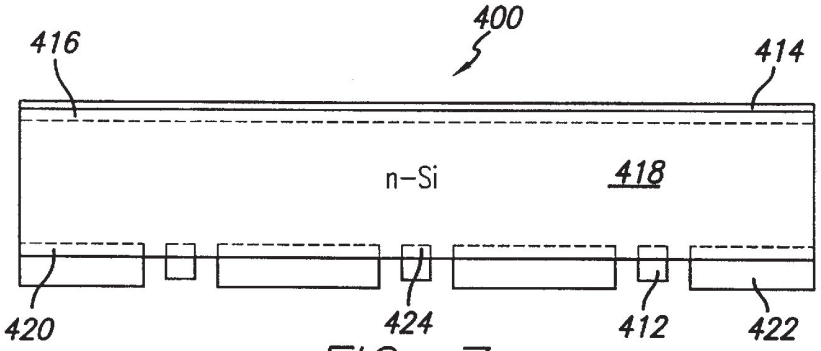

FIG. 7

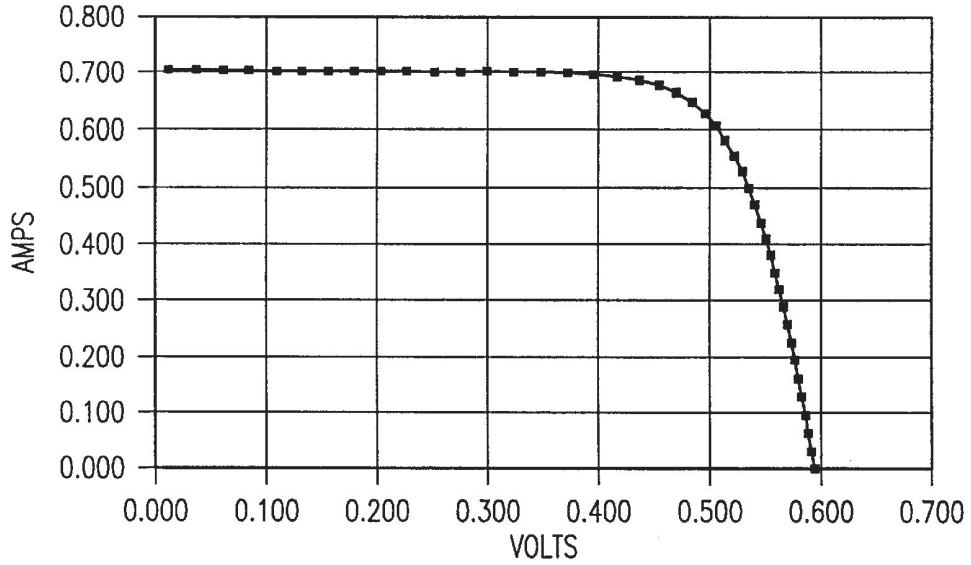
0.800
0.700
0.600
0.500
0.400
0.300
0.200
0.100
0.000
AMPS
0.000
0.100
0.200
0.300
0.400
0.500
0.600
0.700
VOLTS

FIG. 4

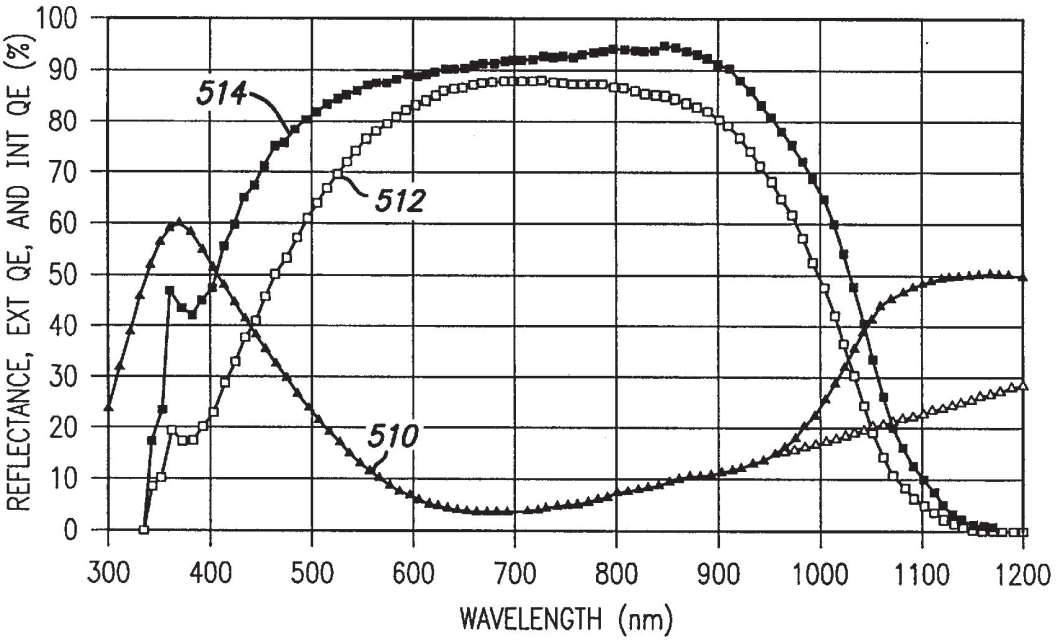
100
90
80
70
60
50
40
30
20
10
0
REFLECTANCE, EXT QE, AND INT QE (%)
514
512
510
300
400
500
600
700
800
900
1000
1100
1200
WAVELENGTH (nm)

FIG. 5

ALUMINUM ALLOY BACK JUNCTION SOLAR CELL AND A PROCESS FOR FABRICATION THEREOF

REFERENCE TO PRIORITY DOCUMENT

This application claims priority to U.S. Provisional Patent Application No. 60/124,797, filed Mar. 17, 1999, which is incorporated herein by reference for all purposes.

BACKGROUND OF THE INVENTION

The present invention relates to an improved solar cell and a process for fabricating thereof. More particularly, the present invention relates to a solar cell including a p-n junction located near a non-illuminated surface of the solar cell and a process for fabricating thereof.

Solar cells are widely used because they convert easily accessible energy from a light source, such as the sun, to electrical power to operate electrically driven devices, e.g., calculators, computers, and heaters used in homes. FIG. **1** shows a cross-sectional view of a layered stack that makes up a conventional silicon solar cell **10**. Conventional silicon solar cell **10** typically includes a p-n junction **24** sandwiched between a p-type base layer **18** and an n-type layer **16**, which is located near an illuminated (front) surface **11**. The term "illuminated surface," as used herein refers to the surface of a conventional solar cell that is exposed to light energy when the solar cell is active or under operation. Thus, the term "non-illuminated surface" refers to a surface that is opposite the illuminated surface. The basic structure of p-n junction **24** includes a heavily-doped (about 10^{20} cm^{-3}) n-type emitter layer (n^+) **16** at or near the illuminated surface **11** and disposed above a moderately-doped (about 10^{15} cm^{-3}) p-type base layer (p) **18**. Commercial embodiments of conventional solar cells typically include an optional anti-reflective coating **14** and a p^+ layer **20** that is formed between p-type base layer **18** and p-type silicon contact **22**.

A typical depth of p-n junction **24** from the top of the n^+ emitter layer **16** measures about 0.5 μm. A shallow front p-n junction **24** is desired in order to facilitate the collection of minority carriers that are created on both sides of p-n junction **24**. Each photon of light that penetrates into p-type base layer **18** and is absorbed by base layer **18** surrenders its energy to an electron in a bound state (covalent bond) and thereby frees it. This mobile electron, and the hole in the covalent bond it left behind (which hole is also mobile), comprise a potential element of electric current flowing from the solar cell. In order to contribute to this current, the electron and hole cannot recombine, but rather are separated by the electric field associated with p-n junction **24**. If this happens, the electron will travel to n-type silicon contact **12** and the hole will travel to p-type silicon contact **22**.

In order to contribute to the solar cell current, photogenerated minority carriers (holes in the n^+ emitter layer and electrons in the p-type base layer) should exist for a sufficiently long time so that they are able to travel by diffusion to p-n junction **24** where they are collected. The average distance over which minority carriers can travel without being lost by recombining with a majority carrier is called the minority carrier diffusion length. The minority carrier diffusion length generally depends on such factors as the concentration of defects in the silicon crystal (i.e. recombination centers) and the concentration of dopant atoms in the silicon. As the concentration of either defects or dopant atoms increases, the minority carrier diffusion length decreases. Thus, the diffusion length for holes in the heavily-doped n^+ emitter layer **16** is much less than the diffusion length for electrons in moderately-doped p-type base layer **18**

Those skilled in the art will recognize that the n^+ emitter layer **16** is nearly a "dead layer" in that few minority charge carriers created in emitter layer **16** are able to diffuse to p-n junction **24** without being lost by recombination. It is desirable to have n^+ emitter layer **16** that is shallow or as close to surface of emitter layer **16** as possible for various reasons. By way of example, a shallow emitter layer allows relatively few photons to be absorbed in n^+ emitter layer **16**. Furthermore, the resulting photogenerated minority carriers created in n^+ emitter layer **16** find themselves close enough to p-n junction **24** to have a reasonable chance of being collected (diffusion length >junction depth).

Unfortunately, in the conventional solar cell design, the depth of n^+ emitter layer is limited and cannot be as shallow as desired. Metal from emitter contacts **12**, especially those formed by screen-printing and firing, can penetrate into p-n junction **24** and ruin or degrade it. The presence of metal in the p-n junction **24** "shorts" or "shunts" the junction. Therefore, although a shallow and lightly-doped n^+ emitter layer **16** is desired in order to enhance the current produced by the cell, in practice, however, n^+ emitter layer **16** is relatively deeper and more heavily-doped than desired to avoid shunting p-n junction **24**. Consequently, in conventional solar cells, the deep location of n^+ emitter layer **16** compromises the amount of current produced by the cell.

What is needed is a structure and process for fabricating a silicon solar cell, which has a high minority carrier diffusion length, eliminates shunting of the p-n junction and does not compromise the amount of current produced.

SUMMARY OF THE INVENTION

In one aspect, the present invention provides a solar cell. The solar cell includes a base layer having dopant atoms of n-type conductivity and being defined by an illuminated surface and a non-illuminated surface. The illuminated surface has light energy impinging thereon when the solar cell is exposed to the light energy and the non-illuminated surface is opposite the illuminated surface. The solar cell further includes a back surface emitter layer that is made from an aluminum alloy to serve as a layer of p-type conductivity. The solar cell further still includes a p-n junction layer disposed between the non-illuminated surface of the base layer and the back surface layer.

In another aspect, the present invention provides a process for fabricating a solar cell. The process includes: (1) providing a base layer, (2) fabricating an emitter layer of p-type conductivity on a same side as the non-illuminated surface of the base layer to provide a strongly doped p-type emitter layer and a p-n junction between the n-type base layer and the p-type emitter layer. The base layer of the present invention has n-type conductivity and is defined by an illuminated surface and a non-illuminated surface. The illuminated surface has light energy impinging thereon when the solar cell is exposed to the light energy and the non-illuminated surface is opposite the illuminated surface.

These and other features of the present invention will be described in more detail below in the detailed description of the invention and in conjunction with the following figures.

BRIEF DESCRIPTION OF THE DRAWINGS

The present invention is illustrated by way of example, and not by way of limitation, in the figures of the accompanying drawings in which:

FIG. **1** shows a cross-sectional view of a conventional solar cell.

FIG. **2** shows a cross-sectional view of a solar cell, in accordance with an embodiment of the present invention.

FIGS. **3**A–**3**D show various stages of fabrication, according to one embodiment of the present invention, for the solar cell of FIG. **2**.

FIG. **4** shows a graph of a measured I-V curve of an aluminum alloy back junction dendritic web solar cell.

FIG. **5** shows a graph of internal quantum efficiency of an aluminum alloy back junction dendritic web solar cell.

FIG. **6** shows a cross-sectional view of a solar cell, in accordance with another embodiment of the present invention, with partial metal coverage on the back side of the solar cell.

FIG. **7** shows a cross-sectional view of a solar cell, in accordance with yet another embodiment of the present invention, whose contacts to the base layer are at the back of the cell in interdigitated fashion.

DESCRIPTION OF THE PREFERRED EMBODIMENTS

The present invention will now be described in detail with reference to the presently preferred embodiments as illustrated in accompanying drawings. In the following description, numerous specific details are set forth in order to provide a thorough understanding of the present invention. It will be apparent, however, to one skilled in the art, that the present invention may be practiced without some or all of these specific details. In other instances, well known process steps and/or structures have not been described in detail in order to not unnecessarily obscure the present invention.

It is important to bear in mind that a minority carrier electron diffusion length (i.e. electrons in p-type silicon) is generally different from a minority carrier hole diffusion length (i.e. holes in n-type silicon) for a given doping concentration. This difference may depend on the nature of the crystalline defect, which may act as a recombination center. In dendritic web silicon, for example, the primary defects are precipitates of silicon oxide which nucleate on dislocation cores. The interface between the silicon oxide precipitate and the surrounding silicon carries a positive charge because of the mismatch of the atomic structure of the two materials. A negatively charged minority carrier electron is attracted to such a positively charged interface. Such a defect can capture and hold an electron until one of the numerous majority carrier holes wanders by the defect whereupon the electron can fall into the hole in a recombination event.

The present invention therefore recognizes that for a solar cell substrate layer, n-type doping may be desirable to achieve a higher minority carrier diffusion length than that obtained with p-type doping. A solar cell substrate having n-type conductivity requires an n-type base layer. A p-n junction was, therefore, fabricated employing the n-type base layer and an emitter layer at the illuminated side that includes boron, which is a practical choice for a p-type dopant.

Unfortunately, it was found that boron diffusions frequently leave a stained silicon surface because of the formation of boron-silicon compounds. Such a stain seriously degrades the appearance of the surface of a solar cell. Boron stains may be removed at the expense of additional and unwanted processing steps such as thermal oxidation of the stained surface followed by chemically removing the thermal oxide. Thus, according to the findings of the present invention, for silicon materials in which n-type doping gives higher minority carrier diffusion length than does p-type doping, the desirability of a front p-n junction is offset by the presence of a boron stain for the p-type emitter layer.

Referring back to FIG. **1**, commercial solar cells **10** have an n^+pp^+ structure. The n-type emitter layer **16** is commonly made using phosphorus diffusion (in which staining is not a problem), the silicon substrate is doped p-type, and back silicon surface **20** is typically doped p^+ to promote ohmic contact with contact metal layer **22**. An ohmic contact has a low resistance. The voltage developed across an ohmic contact has a linear relationship to the current flowing through the contact. In contrast, the voltage developed across a rectifying contact has a non-linear relationship to the current flowing through the contact. An aluminum-silicon alloy may be used to provide the p^+ doping and the back metal contact. More importantly, the commercial solar cell **10** has p-n junction **24** located at the front of the cell. As explained above, therefore, n^+ emitter layer **16** is forced to be deeper than desired to avoid shunting the front junction. If a silicon material with superior minority carrier diffusion length with n-type doping is to be used with a front p-n junction, p-type emitter layer is boron-doped to be practical. Boron doping, as explained above, gives a stained surface, which degrades cell appearance and which can only be removed with additional and unwanted processing.

The present invention, therefore, provides a p-n junction located at the back end of the solar cell. FIG. **2** shows a solar cell layer stack **110**, according to one embodiment of the present invention, that has the p-n junction located at the back end (near the non-illuminated surface of the base layer), so it is impossible for the front metal contacts **112** to shunt the p-n junction. Since aluminum may be the choice of dopant in the silicon p^+ layer, it is also impossible for the aluminum to shunt the junction.

Solar cell layer stack **110** includes a base layer **118** of n-type conductivity, which is defined by an illuminated surface (front or top surface) **126** and a non-illuminated surface (back or bottom surface) **128**. A portion of base layer **118** near illuminated surface **126** is passivated by a shallow n^+ layer **116**, which is typically formed by phosphorus diffusion into a silicon layer. This embodiment, therefore, realizes the advantage of the conventional n^+ layer and does not suffer from boron staining. An optional anti-reflective (AR) coating **114** is disposed atop n^+ layer **116**. If the coating is present as shown in FIG. **2**, silver contacts **112** fire through AR coating **114** to reach the surface of n^+ silicon layer **116**.

A p-n junction **124** is formed at non-illuminated surface **128** or the interface between base layer **118** and an aluminum doped silicon layer **120**, which functions as a p^+ emitter layer in the solar cell layer stack of the present invention. An aluminum-silicon eutectic metal layer **122**, which results when aluminum is alloyed with silicon, is disposed beneath p^+ layer **120** and serves as a self-aligned contact to p^+ emitter layer **120**. It is noteworthy that boron doping is absent from the solar cell structure of FIG. **2**, so that there is no boron stain to compromise the appearance of the front surface.

The placement of the p-n junction at the back side of cell **110** is a unique feature of solar cell **110** shown in FIG. **2**. It should be borne in mind that no other current silicon solar cell design employs such an aluminum alloy back junction. Furthermore, the depth of n^+ layer **116** is of no real concern regarding shunting because p-n junction **124** is at the back of cell **110**.

In accordance with one embodiment, n-type base layer **118** is a dendritic web silicon crystal having a resistivity that

is generally between about 5 Ω-cm and about 100 Ω-cm, and preferably about 20 Ω-cm. The thickness of the dendritic web silicon substrate crystal is generally between about 30 μm and about 200 μm, and preferably about 100 μm. In order for the cell **110** to operate at a practical energy conversion efficiency level, the hole diffusion length in n-type base layer **118** is, in one implementation of this embodiment, slightly less than the thickness of base layer **118**. In a preferred implementation, however, the hole diffusion length is substantially equal to the thickness of base layer **118** and more preferably exceeds the thickness of base layer **118**.

Locating the p-n junction near the back of the cell instead of near the front of the cell is counterintuitive to one skilled in the art. It is normally desirable to have the p-n junction near the front of the cell because the number of photons absorbed per unit depth decreases as one proceeds from the illuminated surface toward the back surface. For example, about 52% of the incident photons are absorbed within the first 5 μm of the base layer from the illuminated surface, while about 10% are absorbed within the second 5 μm slice of depth, and about 6% are absorbed within the third 5 μm slice. In fact, about 75% of the incident photons are absorbed within the top 30 μm of the base layer.

Since the absorption of photons results in the generation of electron-hole pairs, and since the minority carrier members of the pairs diffuse to the junction in order to be collected, placing the p-n junction near the illuminated surface is reasonable. As a rule of thumb, those minority carriers created beyond one diffusion length from the junction will not be collected and so will not contribute to the solar cell photocurrent.

FIGS. **3**A–**3**D show important intermediate solar cell structures formed at different stages of a fabrication process, according to one embodiment of the present invention. The illustrated embodiment of the inventive processes may begin when a single crystal silicon substrate of n-type conductivity is fabricated using well-known conventional techniques, e.g., Czochralski, Float-zone, Bridgman, edge defined film-fed growth (EFG), string ribbon growth, cast silicon crystallized by directional solidification, and dendritic web growth. In a preferred embodiment, however, the dendritic web growth technique may be implemented to produce an n-type single crystal substrate.

Referring to FIG. **3**A, the n-type single crystal serves as a base layer **218**, below which a p-n junction **224** (see FIGS. **3**C and **3**D) of the solar cell is subsequently formed. In a next step, a strongly doped n-type layer **216** (hereinafter referred to as an "n^+ layer") may be formed atop base layer **218** using diffusion processes well known to those skilled in the semiconductor and solar cell fabrication art. In accordance with one embodiment of the present invention, a layer containing phosphorous is applied to the top surface of base layer **218** and the phosphorous atoms are driven into base layer **218** from any heat source. The phosphorous layer is preferably from a screen printed paste or from a liquid dopant, and the heat source is a rapid thermal processing (RTP) unit or a belt furnace maintained at a temperature that is between about 750° C. and about 1050° C. and preferably about 950° C. At these temperatures, the diffusion time may generally be between about 30 seconds to about 30 minutes and preferably be about 5 minutes. As a result, there is formed a phosphorus-doped n^+ passivating layer having a thickness that is generally between about 0.1 μm and about 1 μm, preferably about 0.3 μm, with a sheet resistance of generally between about 10 Ω/square and about 200 Ω/square and preferably about 40 Ω/square.

Alternatively, in another embodiment, the top surface of base layer **218** is subjected to phosphorous ion implantation and a portion near the top surface of base layer is transformed into n^+ layer **216**.

In accordance with yet another embodiment, base layer **218** is passivated with a transparent dielectric layer which may have an appreciable positive or negative charge. In one implementation of this embodiment, the base layer is passivated with a layer of thermally grown silicon dioxide having a thickness of between about 50 Å and about 500 Å, and preferably about 150 Å. In this embodiment, the passivation of base layer **218** may be carried out in a rapid thermal processing unit at temperatures that are generally between about 800° C. and about 1050° C. and preferably about 1000° C. Such temperature treatment is carried out for times that are generally between about 30 seconds and about 30 minutes and preferably about 50 seconds. Regardless of how the n^+ layer is passivated, or whether it is passivated those skilled in the art will recognize that at the conclusion of forming n^+ layer **216**, a high-low junction (n^+n) is formed at the top of base layer **218**.

An anti-reflective coating **214** may then be deposited on top of n^+ layer **216**, as shown in FIG. **3**B. By way of example, plasma-enhanced chemical vapor deposition (PECVD) of silicon nitride or atmospheric pressure chemical vapor deposition (APCVD) of titanium dioxide is carried out to form anti-reflective coating **214**.

Next, conventional techniques may be employed to deposit an aluminum layer **222** on a bottom surface or non-illuminated surface of base layer **218**. According to one embodiment of the present invention, aluminum is deposited by screen printing a pure aluminum paste onto bottom surface of base layer **218**. In one implementation of this embodiment, aluminum layer **222** is deposited by screen-printing over nearly the entire back of the cell to a thickness that is generally between about 5 μm and about 30 μm, and preferably about 15 μm. The partially fabricated solar cell is then heated in a radiantly-heated belt furnace to a temperature comfortably above the aluminum-silicon eutectic temperature of about 577° C., e.g., that may generally be between about 700° C. and about 1000° C. and preferably about 800° C., for a long enough duration, e.g., generally between about 0.1 minute and about 10 minutes and preferably about 2 minutes, to facilitate alloying of at least some aluminum from layer **222** with base layer **218**. During the alloying process, the temperature treatment inside the belt furnace is high enough so that aluminum may effectively dissolve silicon. At such high temperatures, a portion of the base layer that measures approximately one-third the thickness of the aluminum layer is effectively dissolved to create p^+ layer **220** shown in FIG. **3**C. By way of example, at about 800° C., a 15 μm thick aluminum layer **222** dissolves a 5 μm portion of a silicon base layer. Consequently, p^+ layer **220** is silicon doped with aluminum and contact layer **222** is an alloy that is about 88% aluminum by weight and about 12% silicon by weight the eutectic composition.

The p^+ emitter layer is created as described hereinafter. As the silicon cools, it continues to solidify or grow onto the underlying silicon, also incorporating a modest amount of the aluminum dopant, on the order of between about 10^{18} and about 10^{19} aluminum atoms per cubic centimeter. The concentration of aluminum atoms is significantly less than the concentration of silicon atoms, which is about 10,000 times larger at about 5×10^{22} atoms per cubic centimeter. As shown in FIG. **3**C, after cooling the layers, a portion of base layer **218** near the non-illuminated surface is transformed to a strongly doped p-type layer **220** (hereinafter referred to as a "p^+ layer"), by liquid phase epitaxy. Some of the silicon that was dissolved becomes part of the aluminum-silicon

eutectic layer **222**. The silicon that was not dissolved by the aluminum acts as a template for restructuring the silicon crystal as it is epitaxially regrown.

The aluminum-silicon eutectic metal layer **222** is a good conductor (has a low electrical resistance), and serves as a self-aligned metal contact to the solar cell. The thickness of aluminum-silicon eutectic metal layer **222** is generally between about 1 μm and about 30 μm and preferably about 15 μm.

FIG. **3**D shows the structure resulting after depositing metal contacts and firing through the optional anti-reflective coating. By way of example, a silver layer is screen-printed onto the n^+ layer **216**, covering about 7% of the front surface in a grid pattern. Silver may be deposited by screen-printing to a thickness that is generally between about 5 μm and about 20 μm and preferably about 10 μm. The resulting partially fabricated solar cell structure is then run through a belt furnace maintained at a temperature that is generally between about 700° C. and about 900° C. and preferably about 760° C. The time for running the cell through the furnace is short in order to avoid allowing impurities in the silver paste from diffusing into the silicon. In one embodiment of the present invention, the time for running the cell through the belt furnace is between about 0.1 minutes and about 10 minutes. In a preferred embodiment, however, the time is about 40 seconds. The thickness of silver ohmic contacts **212** to n^+ layer **216** is generally between about 1 μm and about 20 μm and preferably about 10 μm. If an optional anti-reflective coating is deposited, then the silver layer is fired through the coating. Both operations may (with or without anti-reflective coating) be performed in a radiantly-heated belt furnace. The fabrication steps of the present invention realize high-throughput and low-cost manufacturing.

FIG. **4** depicts an I-V curve, which shows a light energy to electrical energy conversion efficiency of about 12.5% for an aluminum alloy back junction dendritic web silicon solar cell with full back metal coverage of the present invention. The solar cell employed to obtain the data shown in FIG. **4** has a nominal thickness of about 100 μm and an area of about 25 cm^2. Other parameters include a short-circuit current density of about 28.2 mA/cm^2, open-circuit voltage of about 0.595 V, and fill factor of about 0.747. The knee of the curve shows a maximum power point, where V_{mp} is about 0.480V and I_{mp} is about 0.653 A.

FIG. **5** depicts measurements of spectral reflectivity (solid triangles) **510**, external quantum efficiency (open squares) **512**, and internal quantum efficiency (solid squares) **514** for the solar cell of FIG. **4**. Measured reflectivity indicates that about 47% of the long wavelength (>950 nm) light is reflected from the aluminum-silicon eutectic metal layer at the back surface. This reflected light then gets a second pass through the silicon and adds to the overall efficiency. Calculation of the internal quantum efficiency using the one-dimensional finite element model PC 1 D indicates a hole diffusion length of about 200 μm in the base of this cell. This is double the cell thickness, as required for good performance. The internal quantum efficiency curve has a positive slope over the range of about 500 nm to about 850 nm, indicating that the p-n junction is at the back of the cell, which is also noteworthy. In a conventional solar cell, the internal quantum efficiency curve would show a negative slope, indicating that the p-n junction is at the front of the cell.

FIG. **6** shows a solar cell layer stack **300**, in accordance with another embodiment of the present invention, that is substantially similar to the solar cell **110** of FIG. **2**, except that solar cell **300** has only part of the back surface converted to a p-type layer, as indicated by sections **320**, and covered with metal, as indicated by sections **322**. Solar cell layer stack **300**, accordingly, includes a base layer **318** of n-type conductivity, which is defined by an illuminating surface (front or top surface) **326** and a non-illuminating surface (back or bottom surface) **328**. A portion of base layer **318** near illuminated surface **326** is passivated by a shallow n^+ layer **316**, which can typically be formed by phosphorus diffusion into a silicon layer. An optional anti-reflective (AR) coating **314** can be disposed on top n^+ layer **316**. Metal contacts **312** are illustrated as being deposed through anti-reflective (AR) coating **314**. A p-n junction **324** is located at the non-illuminating surface **328**. Thus, solar cell **300** is referred to as having "partial" metal coverage on the back side as opposed to have "full" metal coverage, as shown in FIG. **2** for solar cell **110**, where the entire back surface is covered with metal. The partial metal coverage design of FIG. **6** eliminates bowing of the thin cells, which results from a differential thermal contraction between the silicon and the aluminum-silicon eutectic metal layer upon cooling from the eutectic temperature of about 577° C. It is important to bear in mind that such bowing sometimes occurs when full back metal coverage is used. The segmented metal also reduces the cost of aluminum. The exposed n-type base layer surfaces **330** between metal islands at the back may be passivated in order to obtain respectable energy conversion efficiency. By way of example, the passivation step may be performed after the aluminum alloying step by growing a thermal oxide of about 115 Å thickness in a rapid thermal processing unit at about 1000° C. for about 50 seconds. An anti-reflective coating may not be applied in this preliminary effort. Efficiencies up to about 6.8% were obtained for 25 cm^2 dendritic web silicon cells with screen-printed metals but without anit-reflective coating. The expected efficiency with an anti-reflective coating is about 9.9%.

FIG. **7** depicts a solar cell layer stack **400**, according to yet another embodiment of the present invention, that is substantially similar to the solar cell **300** of FIG. **6**, except that solar cell **400** has n-type contacts **412** to the n-type base **418** layer moved from the front of the cell to the back of the cell in an interdigitated fashion. Similarly, solar cell layer stack **400** includes a n^+ layer **416**, an optional AR coating **414**, p^+ layer **420** and metal layer **422**. For more information on interdigitated contacts, further reference may be made to U.S. patent application Ser. No. 60/045,673, filed on May 6, 1997, to Daniel L. Meier and Hubert P. Davis, entitled, "Self-doping Negative and Positive Electrodes for Silicon Solar Cells and Other Devices," and issued U.S. Pat. No. 5,641,362 to Daniel L. Meier entitled, "Structure and Fabrication Process for an Aluminum Alloy Junction Self-Aligned Back Contact Silicon Solar Cell," which are hereby incorporated by reference in their entirety for all purposes.

This structure shown in FIG. **7** has the added advantage of reducing to zero the shadowing of the front surface by contacts. Interconnecting cells in a module is also expected to be simpler with both contacts on the back side of the cell in that surface mount technology can be used. The n^+ regions **424** adjacent silver contacts **412** may be formed in a separate step. Alternatively, the source of this n-type dopant can be the contact material itself if a self-doping contact metal, such as a silver-antimony alloy, is used rather than pure silver. A prototype dendritic web silicon solar cell of this type with screen-printed metals, titanium dioxide anti-reflective coating and about 2.5 cm^2 area had an efficiency of about 10.4%.

It is noteworthy that although the present invention is described in terms of a silicon crystal substrate and

aluminum, there is no reason why other substrate and conductive materials cannot be similarly employed. Furthermore, it can therefore be appreciated that new and novel structure and processes for fabricating an aluminum alloy back junction solar cell has been described. It will be appreciated by those skilled in the art that, given the teaching herein, numerous alternatives and equivalents will be seen to exist which incorporate the invention disclosed hereby. As a result, the invention is not to be limited by the foregoing exemplary embodiments, but only by the following claims.

What is claimed is:

1. A solar cell, comprising:

a base layer including dopant atoms of n-type conductivity and being defined by an illuminated surface and a non-illuminated surface, said illuminated surface having light energy impinging thereon when said solar cell is exposed to said light energy and said non-illuminated surface is opposite said illuminated surface;

a back surface emitter layer including an aluminum alloy contact and serving as a layer of p-type conductivity; and

a p-n junction layer disposed between said non-illuminated surface of said base layer and said back surface emitter layer

wherein said back surface emitter layer is an uninterrupted layer covering a significant portion of said non-illuminated surface.

2. The solar cell of claim **1**, further comprising a strongly doped n-type layer that is disposed adjacent the illuminated surface of the base layer.

3. The solar cell of claim **2**, wherein the strongly doped n-type layer includes phosphorous atoms.

4. The solar cell of claim **2**, further comprising an anti-reflective coating layer that is disposed adjacent the strongly doped n-type layer.

5. The solar cell of claim **1**, wherein a diffusion length of a hole through said base layer is slightly less than the thickness of the base layer.

6. The solar cell of claim **1**, wherein a diffusion length of a hole through said base layer is substantially equal to the thickness of said base layer.

7. The solar cell of claim **1**, wherein a diffusion length of a hole through the base layer exceeds the thickness of the base layer.

8. The solar cell of claim **1**, wherein the n-type base layer is fabricated using one technique selected from the group consisting of cast silicon crystallized by directional solidification, edge-defined film-fed growth, string ribbon growth, Czochralski, Float-zone, Bridgman and dendritic web growth.

9. The solar cell of claim **1**, wherein the n-type base layer is a dendritic web silicon layer.

10. The solar cell of claim **1**, wherein the n-type base layer has a resistivity that is between about 5 Ω-cm and about 100 Ω-cm.

11. The solar cell of claim **1**, wherein the n-type base layer has a resistivity that is about 20 Ω-cm.

12. The solar cell of claim **1**, wherein the thickness of the n-type base layer is between about 30 μm and about 200 μm.

13. The solar cell of claim **1**, wherein the thickness of the n-type base layer is about 100 μm.

14. The solar cell of claim **1**, wherein the aluminum alloy contact is an aluminum-silicon eutectic metal layer.

15. The solar cell of claim **1**, wherein the aluminum alloy contact has a thickness that is between about 1 μm and about 30 μm.

16. The solar cell of claim **1**, wherein the aluminum alloy contact is a continuous layer that substantially covers the non-illuminated surface of the back surface emitter layer.

17. A solar cell, comprising:

a base layer including dopant atoms of n-type conductivity and being defined by an illuminated surface and a non-illuminated surface, said illuminated surface having light energy impinging thereon when said solar cell is exposed to said light energy and said non-illuminated surface is opposite said illuminated surface;

a back surface emitter layer including an aluminum alloy contact and serving as a layer of p-type conductivity;

a p-n junction layer disposed between said non-illuminated surface of said base layer and said back surface emitter layer;

a strongly doped n-type layer disposed adjacent the illuminated surface of the base layer;

an anti-reflective coating layer disposed adjacent the strongly doped n-type layer; and

metal contacts penetrating through the anti-reflective coating to reach the strongly doped n-type layer.

18. The solar cell of claim **17**, wherein the metal contacts include silver and serve as ohmic contacts to the base layer.

19. The solar cell of claim **17**, wherein the metal contacts have a thickness of 1 μm to 20 μm.

20. A process for fabricating a solar cell, comprising:

providing a base layer, said base layer having n-type conductivity and being defined by an illuminated surface and a non-illuminated surface, said illuminated surface having light energy impinging thereon when said solar cell is exposed to said light energy and said non-illuminated surface is opposite said illuminated surface;

fabricating an emitter layer of p-type conductivity on the same side as said non-illuminated surface of said base layer to provide a strongly doped p-type emitter layer and a p-n junction between said n-type base layer and said strongly doped p-type emitter layer

wherein fabricating said emitter layer comprises pro ding an aluminum layer on said non-illuminated surface of said base layer and alloying said aluminum layer with at least a portion of said base layer to transform said portion of said base layer into said emitter layer and

wherein said strongly doped p-type emitter layer is an uninterrupted layer covering a significant portion of said non-illuminated surface.

21. The process of claim **20**, wherein said providing the base layer includes fabricating a crystalline silicon substrate of n-type conductivity using one technique selected from the group consisting of Czochralski, Float-zone, Bridgman, cast silicon crystallized by directional solidification, edge-defined film-fed growth (EFG), string ribbon growth, and dendritic web growth.

22. The process of claim **21**, wherein said providing the base layer includes fabricating a crystalline silicon substrate of n-type conductivity using dendritic web growth.

23. The process of claim **20**, wherein said providing said aluminum layer includes screen-printing the aluminum on the non-illuminated side of the base layer.

24. The process of claim **20**, wherein said alloying is accomplished at a temperature of between about 700° C. and about 1000° C.

25. The process of claim **24**, wherein said alloying is accomplished by maintaining said temperature for a time that is between about 1 minute and about 30 minutes.

26. The process of claim **20**, wherein the illuminated surface of the base layer is passivated by a phosphorus-

doped layer having a thickness of between about 0.1 μm and about 1 μm.

27. The process of claim **26**, further comprising forming an anti-reflective coating on at least part of the phosphorus-doped layer, said anti-reflective coating including titanium dioxide or silicon nitride.

28. The process of claim **20**, wherein n-type metal contacts are formed on the illuminated side of the base layer to provide ohmic contact to the base layer.

29. The process of claim **20**, wherein said aluminum layer formed in said alloying substantially covers the back side of the emitter layer.

30. The process of claim **20**, further comprising passivating substantially all exposed illuminated and non-illuminated surfaces of the base layer with a dielectric layer.

* * * * *

UNITED STATES PATENT AND TRADEMARK OFFICE

CERTIFICATE OF CORRECTION

PATENT NO. : 6,262,359 B1
DATED : July 17, 2001
INVENTOR(S) : Daniel L. Meier et al.

It is certified that error appears in the above-identified patent and that said Letters Patent is hereby corrected as shown below:

Column 10,
Line 39, change "wherein fabricating said emitter layer comprises pro ding" to -- wherein fabricating said emitter layer comprises providing --

Signed and Sealed this

Sixteenth Day of April, 2002

Attest:

Attesting Officer

JAMES E. ROGAN
Director of the United States Patent and Trademark Office