US 20110214719A1

(19) United States

(12) Patent Application Publication

(10) Pub. No.: US 2011/0214719 A1

(43) Pub. Date: Sep. 8, 2011

Li et al.

(54) METHOD OF FABRICATING A BACK-CONTACT SOLAR CELL AND DEVICE THEREOF

(76) Inventors: **Bo Li**, San Jose, CA (US); **David Smith**, Campbell, CA (US); **Peter Cousins**, Menlo Park, CA (US)

(21) Appl. No.: **12/972,247**

(22) Filed: **Dec. 17, 2010**

Related U.S. Application Data

(60) Provisional application No. 61/310,655, filed on Mar. 4, 2010.

Publication Classification

(51) **Int. Cl.**
H01L 31/02 (2006.01)
H01L 31/0236 (2006.01)

(52) **U.S. Cl.** **136/252**; 438/71; 257/E31.13

(57) **ABSTRACT**

Methods of fabricating back-contact solar cells and devices thereof are described. A method of fabricating a back-contact solar cell includes forming an N-type dopant source layer and a P-type dopant source layer above a material layer disposed above a substrate. The N-type dopant source layer is spaced apart from the P-type dopant source layer. The N-type dopant source layer and the P-type dopant source layer are heated. Subsequently, a trench is formed in the material layer, between the N-type and P-type dopant source layers.

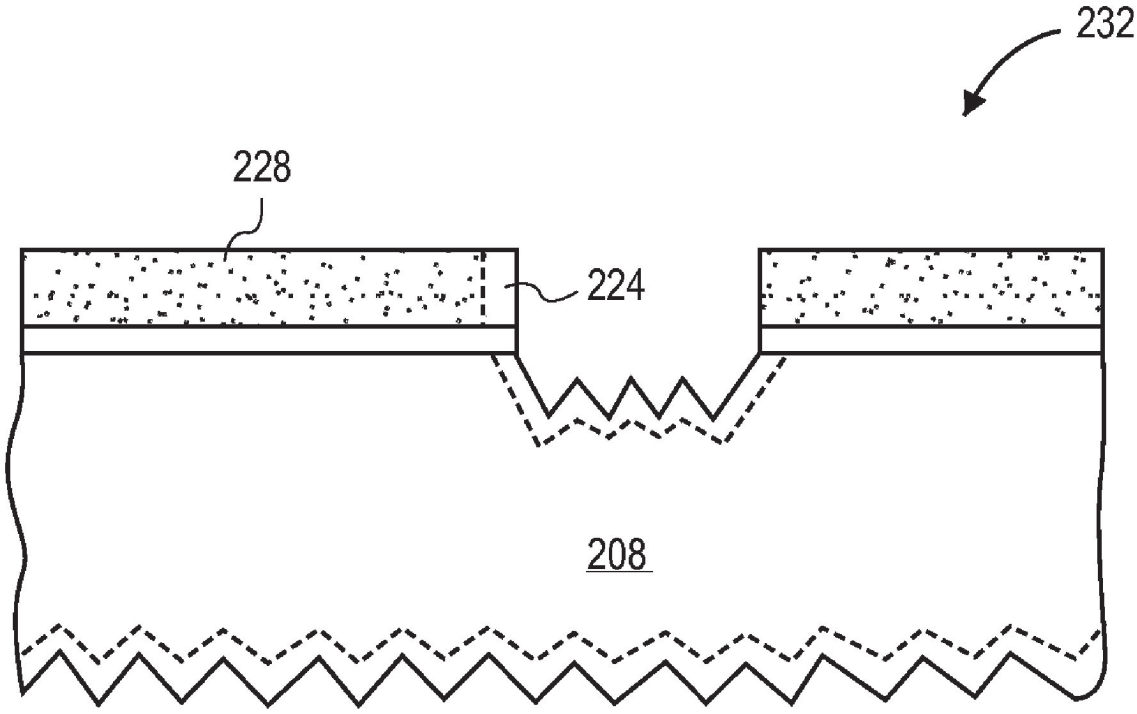

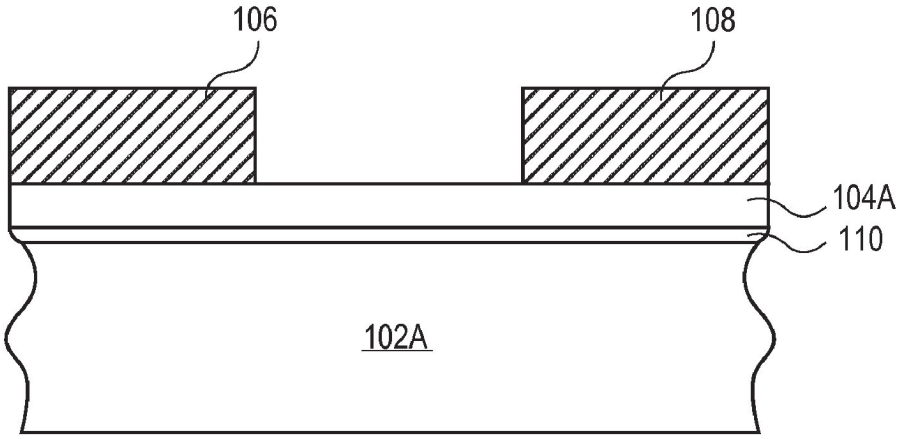

FIG. 1A

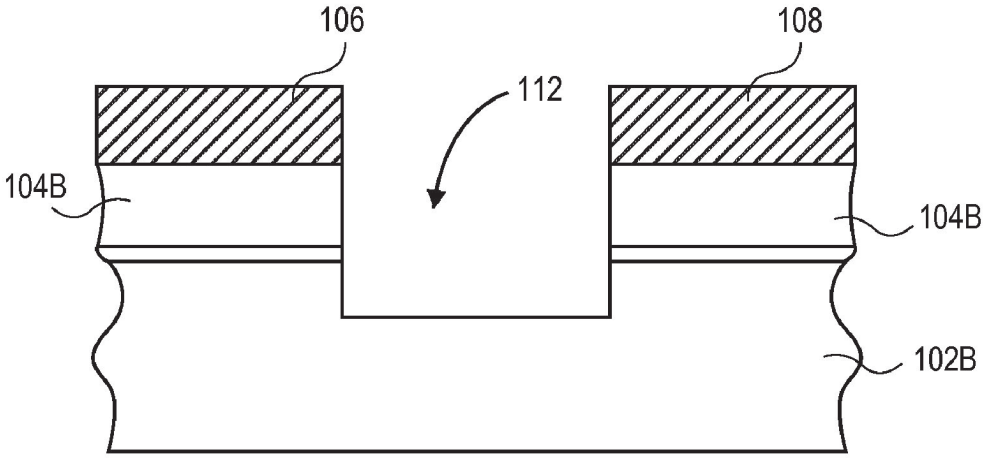

FIG. 1B

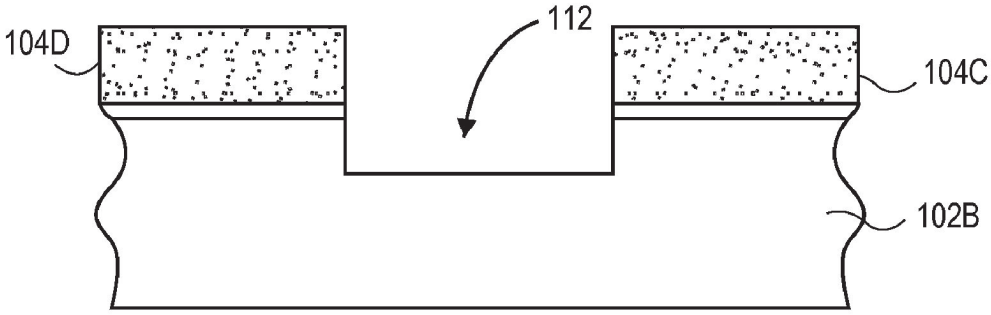

FIG. 1C

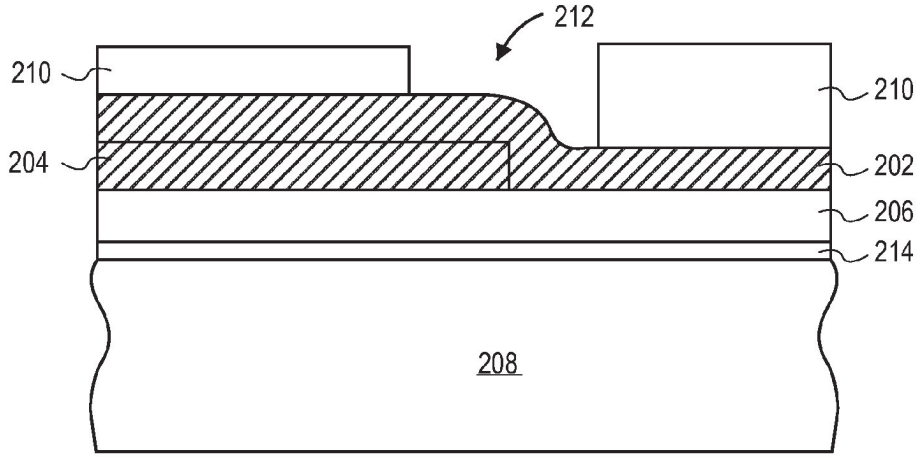

FIG. 2A

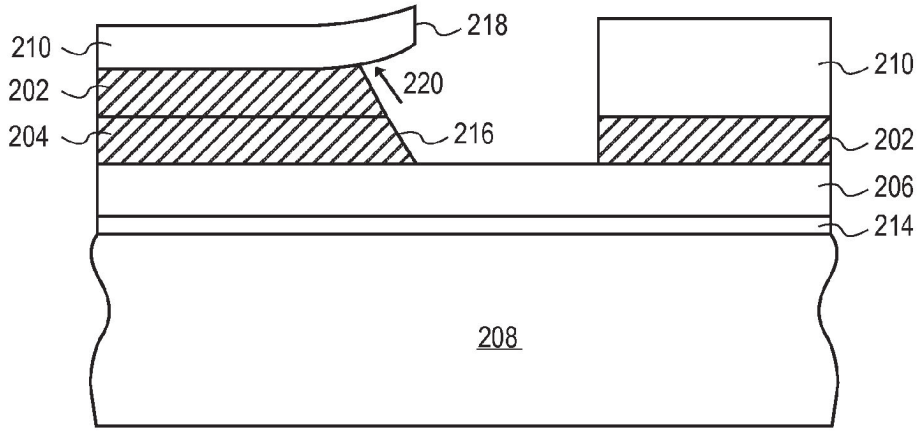

FIG. 2B

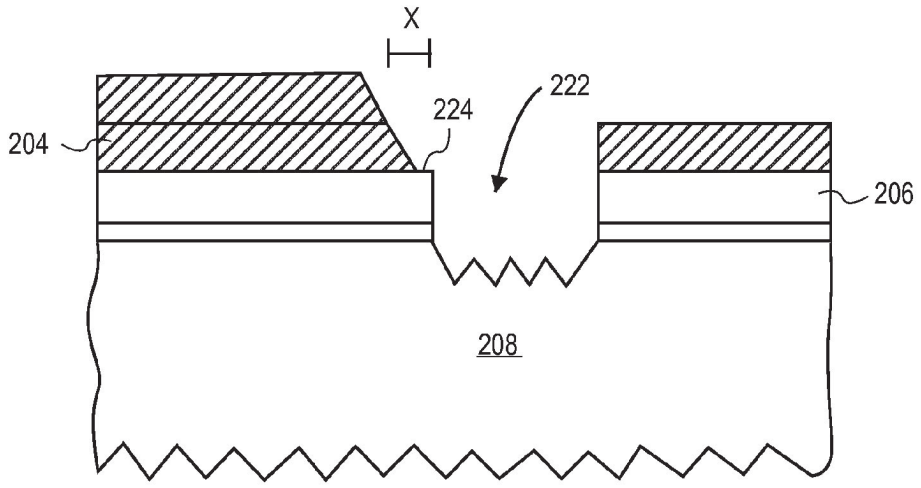

FIG. 2C

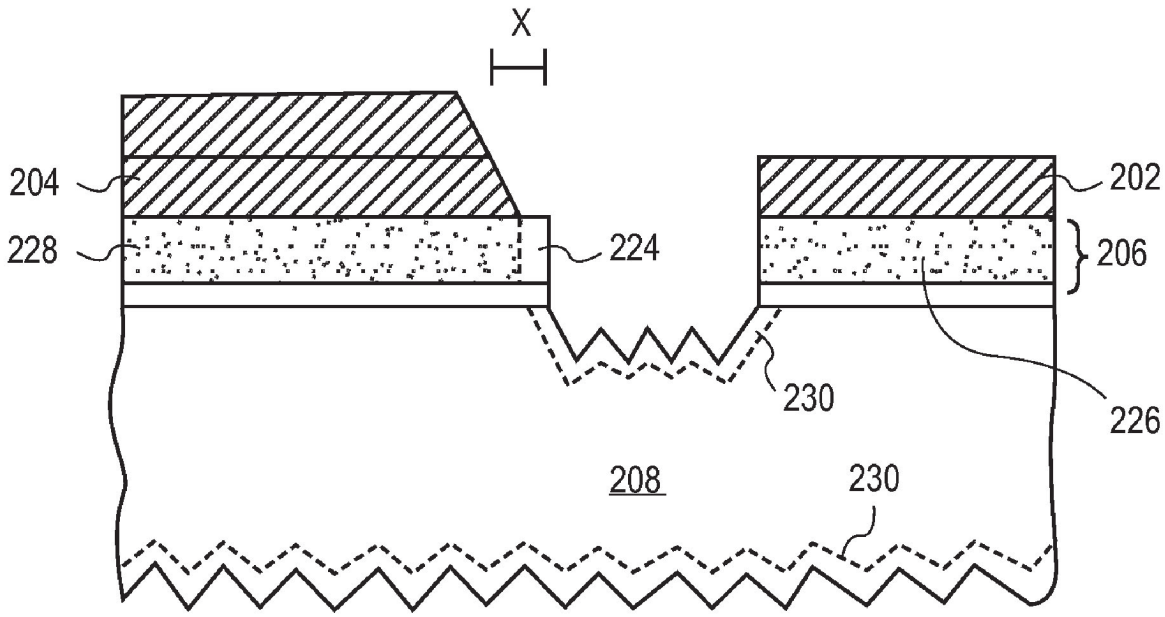

FIG. 2D

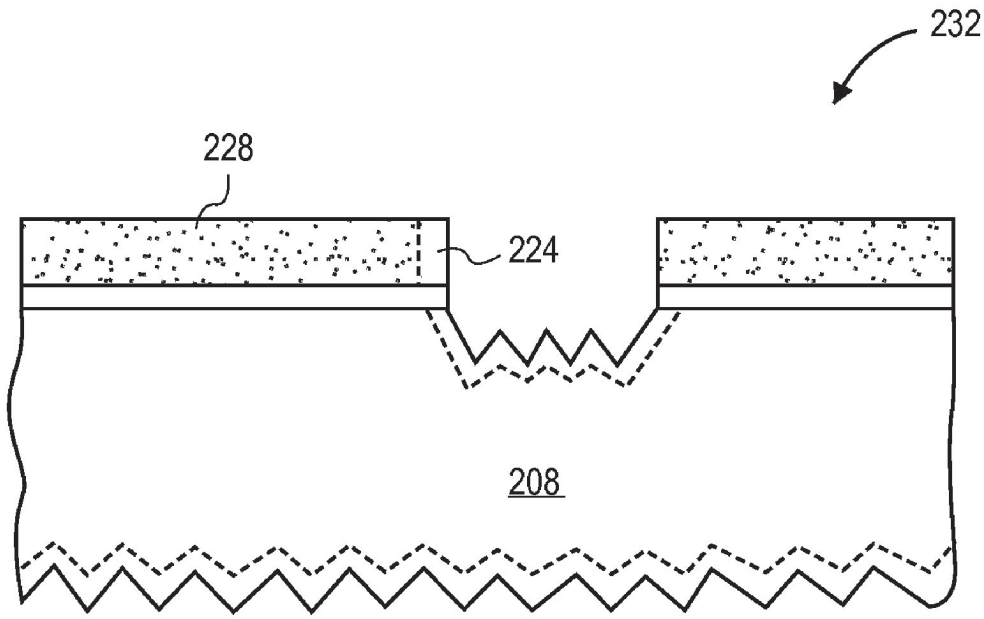

FIG. 2E

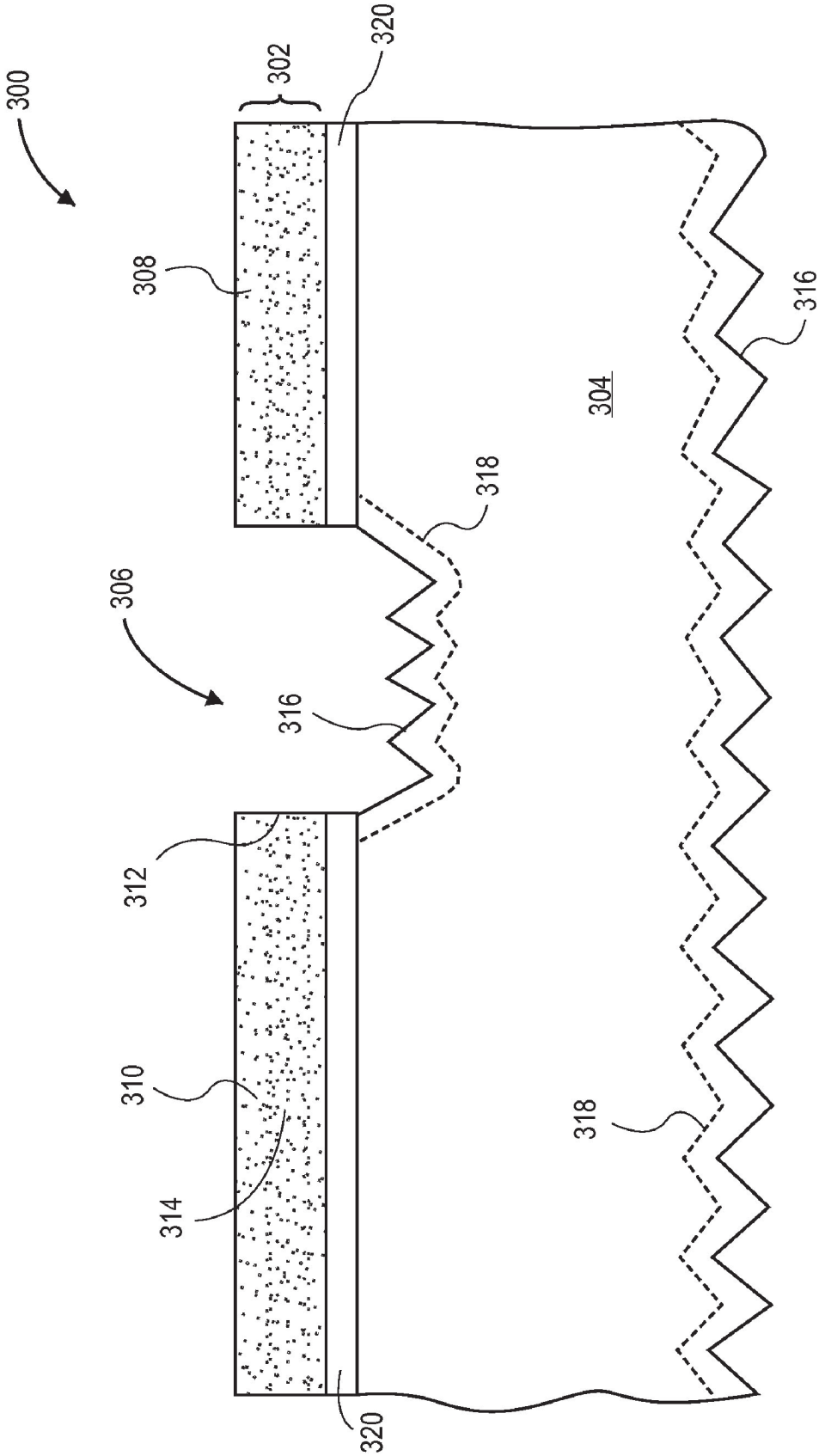

FIG. 3

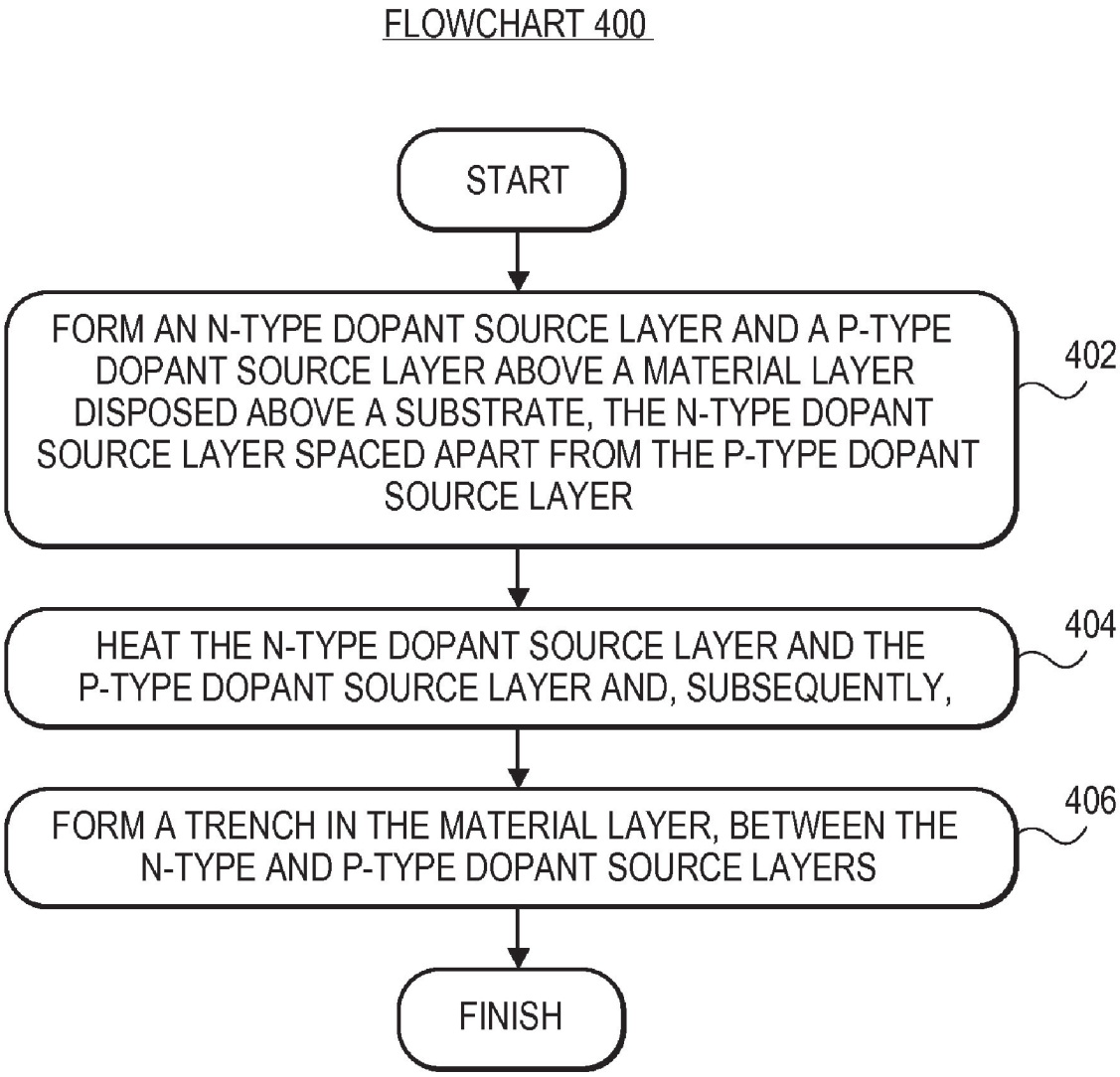
FLOWCHART 400
START
FORM AN N-TYPE DOPANT SOURCE LAYER AND A P-TYPE DOPANT SOURCE LAYER ABOVE A MATERIAL LAYER DISPOSED ABOVE A SUBSTRATE, THE N-TYPE DOPANT SOURCE LAYER SPACED APART FROM THE P-TYPE DOPANT SOURCE LAYER
402
HEAT THE N-TYPE DOPANT SOURCE LAYER AND THE P-TYPE DOPANT SOURCE LAYER AND, SUBSEQUENTLY,
404
FORM A TRENCH IN THE MATERIAL LAYER, BETWEEN THE N-TYPE AND P-TYPE DOPANT SOURCE LAYERS
406
FINISH

FIG. 4

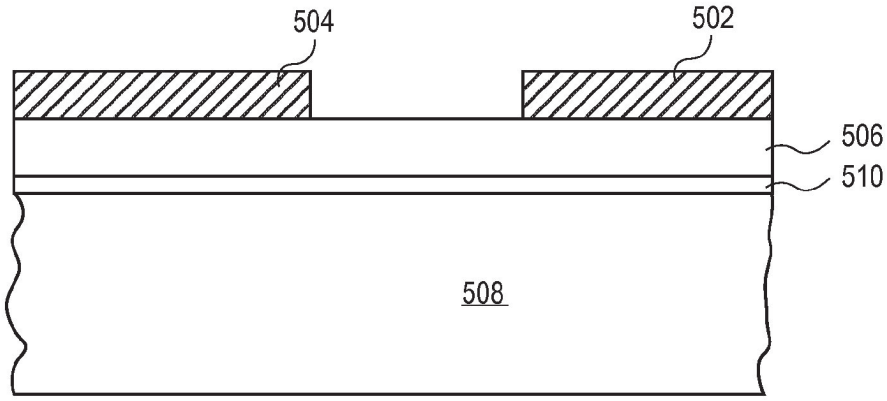

FIG. 5A

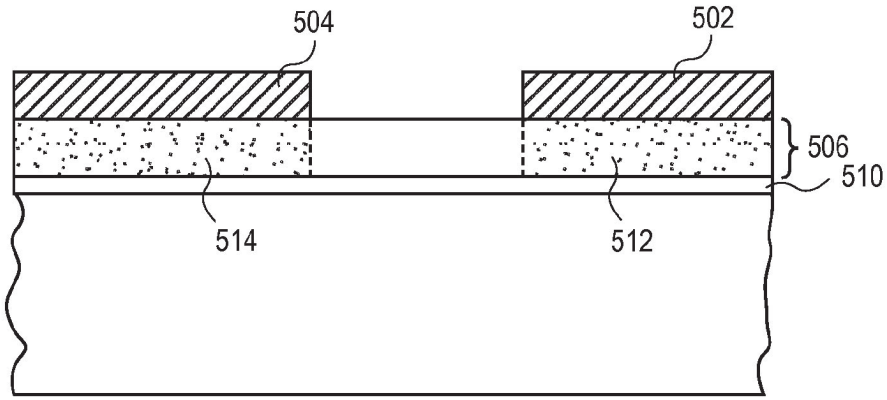

FIG. 5B

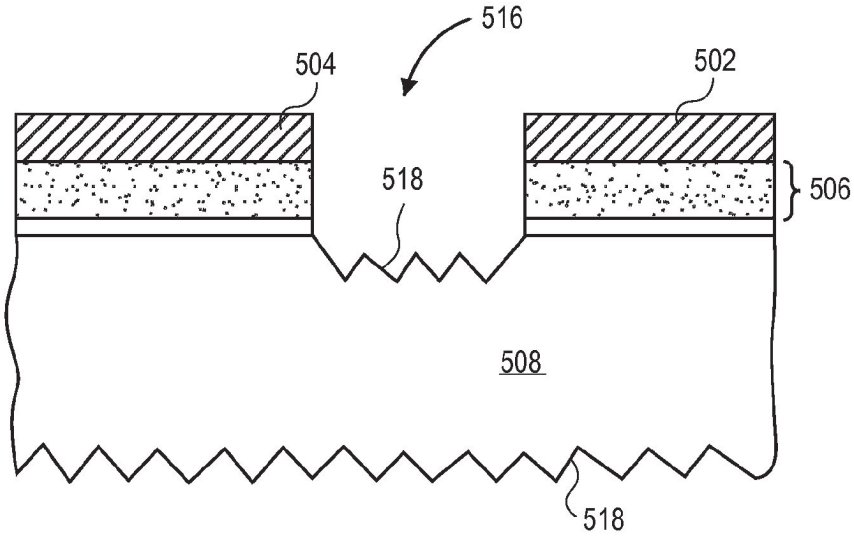

FIG. 5C

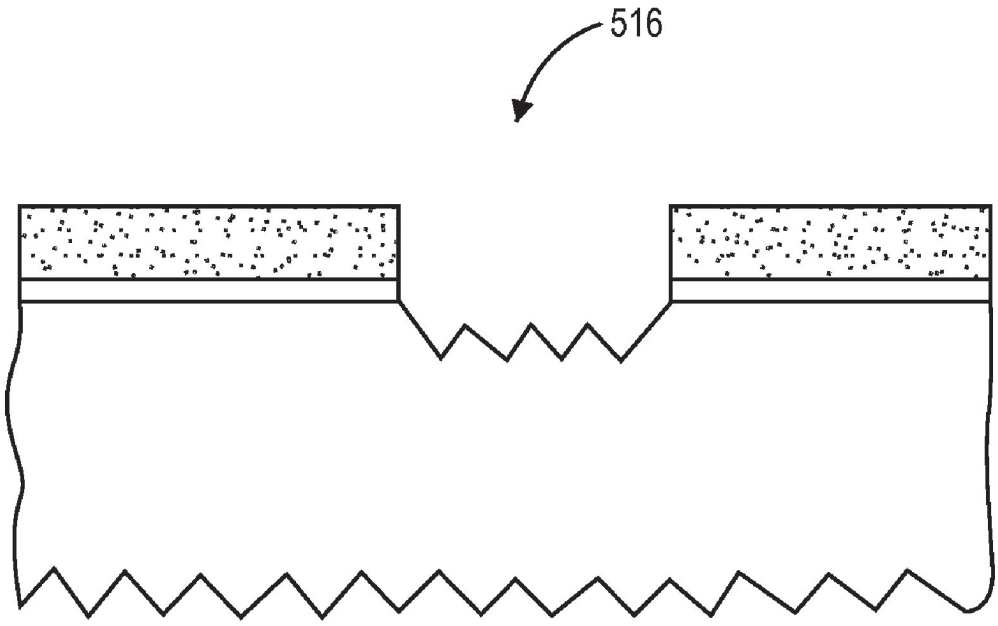

FIG. 5D

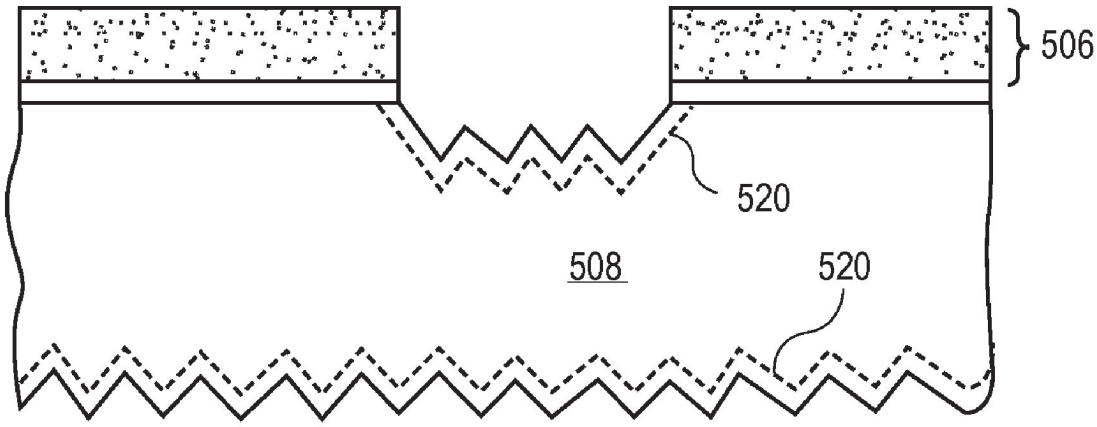

FIG. 5E

METHOD OF FABRICATING A BACK-CONTACT SOLAR CELL AND DEVICE THEREOF

CROSS-REFERENCE TO RELATED APPLICATIONS

[0001] This application claims the benefit of U.S. Provisional Application No. 61/310,655, filed Mar. 4, 2010, the entire contents of which are hereby incorporated by reference herein.

[0002] The invention described herein was made with Governmental support under contract number DE-FC36-07GO17043 awarded by the United States Department of Energy. The Government may have certain rights in the invention.

TECHNICAL FIELD

[0003] Embodiments of the present invention are in the field of renewable energy and, in particular, methods of fabricating back-contact solar cells and devices thereof.

BACKGROUND

[0004] Photovoltaic cells, commonly known as solar cells, are well known devices for direct conversion of solar radiation into electrical energy. Generally, solar cells are fabricated on a semiconductor wafer or substrate using semiconductor processing techniques to form a p-n junction near a surface of the substrate. Solar radiation impinging on the surface of the substrate creates electron and hole pairs in the bulk of the substrate, which migrate to p-doped and n-doped regions in the substrate, thereby generating a voltage differential between the doped regions. The doped regions are connected to metal contacts on the solar cell to direct an electrical current from the cell to an external circuit coupled thereto.

[0005] Efficiency is an important characteristic of a solar cell as it is directly related to the solar cell's capability to generate power. Accordingly, techniques for increasing the efficiency of solar cells are generally desirable. Embodiments of the present invention allow for increased solar cell efficiency by providing processes for fabricating novel solar cell structures.

BRIEF DESCRIPTION OF THE DRAWINGS

[0006] FIG. **1**A illustrates a cross-sectional view of a stage in the fabrication of a back-contact solar cell, in accordance with an embodiment of the present invention.

[0007] FIG. **1**B illustrates a cross-sectional view of a stage in the fabrication of a back-contact solar cell, in accordance with an embodiment of the present invention.

[0008] FIG. **1**C illustrates a cross-sectional view of a stage in the fabrication of a back-contact solar cell, in accordance with an embodiment of the present invention.

[0009] FIG. **2**A illustrates a cross-sectional view of a stage in the fabrication of a back-contact solar cell, in accordance with an embodiment of the present invention.

[0010] FIG. **2**B illustrates a cross-sectional view of a stage in the fabrication of a back-contact solar cell, in accordance with an embodiment of the present invention.

[0011] FIG. **2**C illustrates a cross-sectional view of a stage in the fabrication of a back-contact solar cell, in accordance with an embodiment of the present invention.

[0012] FIG. **2**D illustrates a cross-sectional view of a stage in the fabrication of a back-contact solar cell, in accordance with an embodiment of the present invention.

[0013] FIG. **2**E illustrates a cross-sectional view of a stage in the fabrication of a back-contact solar cell, in accordance with an embodiment of the present invention.

[0014] FIG. **3** illustrates a cross-sectional view of a back-contact solar cell, in accordance with an embodiment of the present invention.

[0015] FIG. **4** illustrates a flowchart representing operations in a method of fabricating a back-contact solar cell, in accordance with an embodiment of the present invention.

[0016] FIG. **5**A illustrates a cross-sectional view of a stage in the fabrication of a back-contact solar cell, corresponding to operation **402** of the flowchart of FIG. **4**, in accordance with an embodiment of the present invention.

[0017] FIG. **5**B illustrates a cross-sectional view of a stage in the fabrication of a back-contact solar cell, corresponding to operation **404** of the flowchart of FIG. **4**, in accordance with an embodiment of the present invention.

[0018] FIG. **5**C illustrates a cross-sectional view of a stage in the fabrication of a back-contact solar cell, corresponding to operation **406** of the flowchart of FIG. **4**, in accordance with an embodiment of the present invention.

[0019] FIG. **5**D illustrates a cross-sectional view of an additional stage in the fabrication of a back-contact solar cell, in accordance with an embodiment of the present invention.

[0020] FIG. **5**E illustrates a cross-sectional view of an additional stage in the fabrication of a back-contact solar cell, in accordance with an embodiment of the present invention.

DETAILED DESCRIPTION

[0021] Methods of fabricating back-contact solar cells and devices thereof are described herein. In the following description, numerous specific details are set forth, such as specific process flow operations, in order to provide a thorough understanding of embodiments of the present invention. It will be apparent to one skilled in the art that embodiments of the present invention may be practiced without these specific details. In other instances, well-known fabrication techniques, such as lithographic techniques, are not described in detail in order to not unnecessarily obscure embodiments of the present invention. Furthermore, it is to be understood that the various embodiments shown in the Figures are illustrative representations and are not necessarily drawn to scale.

[0022] Disclosed herein are methods of fabricating back-contact solar cells. In one embodiment, a method includes forming an N-type dopant source layer and a P-type dopant source layer above a material layer disposed above a substrate, the N-type dopant source layer spaced apart from the P-type dopant source layer. The N-type dopant source layer and the P-type dopant source layer are heated. Subsequently, a trench is formed in the material layer, between the N-type and P-type dopant source layers.

[0023] Also disclosed herein are back-contact solar cells. In one embodiment, a back-contact solar cell includes a material layer disposed above a substrate. A trench is disposed in the material layer, the trench separating an N-type region and a P-type region of the material layer. The P-type region includes a dopant concentration directly adjacent to the trench approximately equal to a dopant concentration in the center of the P-type region.

[0024] In accordance with at least some embodiments of the present invention, solar cells are formed with N-type and

P-type regions of absorbing layers, the regions free from features associated with a signature from a "ledge" feature described below in association with FIGS. **2**A-**2**E. In some embodiments, a reduction in the sheer number of process operations is achieved by using process flows described herein, as compared with conventional process flows. In some embodiments, using process flows such as those described in detail herein may be preferable over conventional flows even though some of the process flows described herein include an additional heating or anneal operation.

[0025] In an aspect of the present invention, it may be desirable to form a solar cell having P-type and N-type absorbing layer regions without signatures resulting from ledge features. FIGS. **1**A-**1**C illustrate cross-sectional views of various stages in the fabrication of a back-contact solar cell, in accordance with an embodiment of the present invention. It is to be understood that the operations of FIGS. **1**A-**1**C are not intended to impose any sort of process order, but rather several high level concepts are to be gleaned from the following discussion of these Figures. More detailed approaches follow the discussion of FIGS. **1**A-**1**C.

[0026] Referring to FIG. **1**A, a method of fabricating a back-contact solar cell includes forming an N-type dopant source layer **108** and a P-type dopant source layer **106** above a material layer **104**A disposed above a substrate **102**A. N-type dopant source layer **108** is spaced apart from P-type dopant source layer **106**, as depicted in FIG. **1**A. Also depicted is a tunnel oxide barrier layer film **110**.

[0027] Referring to FIG. **1**B, the method of fabricating a back-contact solar cell further includes forming a trench **112** through material layer **104**A and part way into substrate **102**A, between N-type and P-type dopant source layers **108** and **106**, respectively, to provide patterned material layer **104**B and patterned substrate **102**B, respectively.

[0028] Referring to FIG. **1**C, N-type and P-type dopants are diffused from N-type and P-type dopant source layers **108** and **106**, respectively, into patterned material layer **104**B to provide N-type-doped material layer region **104**C and P-type-doped material layer region **104**D, respectively, above patterned substrate **102**B. In accordance with an embodiment of the present invention, N-type-doped material layer region **104**C and P-type-doped material layer region **104**D are doped homogeneously, in that the dopant concentration in each of N-type-doped material layer region **104**C and P-type-doped material layer region **104**D nearest trench **112** is approximately the same as the dopant concentration near the centers of N-type-doped material layer region **104**C and P-type-doped material layer region **104**D.

[0029] However, it is to be understood that not every approach to forming a solar cell will avoid the formation of signatures of ledge features in a P-type or an N-type region of an absorbing layer of the solar cell. For example, FIGS. **2**A-**2**E illustrate cross-sectional views of various stages in the fabrication of a back-contact solar cell and, in accordance with an embodiment of the present invention, are provided as a comparison for the detailed discussion associated with FIGS. **3**, **4** and **5**A-**5**E below.

[0030] Referring to FIG. **2**A, a method of fabricating a back-contact solar cell includes forming an N-type dopant source layer **202** over a patterned P-type dopant source layer **204** and over and exposed portion of a material layer **206** disposed above a substrate **208**. A mask **210** is disposed over N-type dopant source layer **202** with a trench pattern **212** included therein. Also depicted is a tunnel oxide barrier layer film **214**.

[0031] Referring to FIG. **2**B, N-type dopant source layer **202** and patterned P-type dopant source layer **204** are etched, in alignment with mask **210**, to provide an arrangement where patterned P-type dopant source layer **204** is spaced apart from the portion of N-type dopant source layer **202** that is directly on material layer **206**, as depicted in FIG. **2**B. However, patterned P-type dopant source layer **204** may include a tapered sidewall **216**, which may undesirably result from partial mask **210** lift-off **218** and/or undercut **220** of mask **206** during the etch process, as is also depicted in FIG. **2**B.

[0032] Referring to FIG. **2**C, further processing includes removal of mask **206** and formation of a trench **222** through material layer **206** and part way into substrate **208**, using the remaining portions of patterned P-type dopant source layer **204** and N-type dopant source layer **202** as an etch mask. However, as depicted in FIG. **2**C, the remaining portion of patterned P-type dopant source layer **204** may be recessed away from the very edge of the portion of material layer **206** directly adjacent trench **222** during the etch process. This may result in the formation of an exposed portion **224** of material layer **206** that is not covered by the remaining portion of patterned P-type dopant source layer **204**. Exposed portion **224** of material layer **206** that is not covered by the remaining portion of patterned P-type dopant source layer **204** is referred to herein as a "ledge" feature, having a width X, which may be an undesirable feature for further processing.

[0033] Referring to FIG. **2**D, the structure of FIG. **2**C is heated or annealed to diffuse, from layers **202** and **204**, dopants into material layer **206** to provide and N-type-doped material region **226** and a P-type-doped material region **228**. However, exposed portion **224** of material layer **206** that is not covered by the remaining portion of patterned P-type dopant source layer **204**, e.g. the ledge, may have a concentration of dopant less than the rest of P-type-doped material region **228** because layer **204** was recessed back from the edge of material layer **206**. This variation in doping, where the end portion of P-type-doped material region **228** has a lower dopant concentration than the rest of P-type-doped material region **228** may have a negative impact on the performance of a solar cell ultimately formed therefrom. It is noted that, during the heating or annealing described above, N-type doped regions **230** may be formed in substrate **208** from a gaseous dopant precursor, as depicted in FIG. **2**D.

[0034] Referring to FIG. **2**E, a portion of a solar cell **232** with layers **204** and **202** removed still retains a signature of the ledge feature, namely portion **224** of P-type-doped material region **228**. In an embodiment, portion **224** has a negative impact on a completed solar cell fabricated therefrom.

[0035] In an aspect of the present invention, a back-contact solar cell may not include a signature from a ledge feature. For example, FIG. **3** illustrates a cross-sectional view of a back-contact solar cell, in accordance with an embodiment of the present invention.

[0036] Referring to FIG. **3**, a back-contact solar cell **300** includes a material layer **302** disposed above a substrate **304**. A trench **306** is disposed in material layer **302**. Trench **306** separates an N-type region **308** and a P-type region **310** of material layer **302**. P-type region **310** includes a dopant concentration **312** directly adjacent to trench **306** approximately

equal to a dopant concentration **314** in the center of P-type region **310**. That is, there is no ledge feature in P-type region **310**.

[0037] In accordance with an embodiment of the present invention, material layer **302** of back-contact solar cell **300** is a poly-crystalline silicon layer, substrate **304** is a single-crystalline silicon substrate, P-type region **310** includes boron dopant impurity atoms, and N-type region includes phosphorous dopant impurity atoms. In an alternative embodiment, instead of forming a poly-crystalline material layer **302**, a non-poly-crystalline absorbing material is formed instead such as, but not limited to, an amorphous layer, a polymer layer, or a multi-crystalline layer. In another alternative embodiment, instead of using a single-crystalline substrate **304**, a multi-crystalline substrate is used in its place.

[0038] In an embodiment, trench **306** of back-contact solar cell **300** is disposed entirely through material layer **302** and partially into substrate **304**, as depicted in FIG. **3**. In one embodiment, surfaces of substrate **304** not covered by material layer **302** include a textured surface **316**, as is also depicted in FIG. **3**. In an embodiment, substrate **304** of back-contact solar cell **300** includes N-type dopants **318** at or near surfaces of substrate **304** not covered by material layer **302**, as further depicted in FIG. **3**.

[0039] In accordance with another embodiment of the present invention, back-contact solar cell **300** further includes a dielectric film **320** disposed directly between material layer **302** and substrate **304**, as depicted in FIG. **3**. In one embodiment, dielectric film **320** is composed of silicon dioxide and has a thickness approximately in the range of 1-2 nanometers. In a specific embodiment, dielectric film **320** is a tunnel oxide barrier layer film.

[0040] In another aspect of the present invention, a back-contact solar cell may be fabricated to not include a ledge feature. For example, FIG. **4** illustrates a flowchart **400** representing operations in a method of fabricating a back-contact solar cell, in accordance with an embodiment of the present invention. FIGS. **5**A-**5**C illustrate cross-sectional views of various stages in the fabrication of a back-contact solar cell, corresponding to operations of flowchart **400**, in accordance with an embodiment of the present invention. FIGS. **5**D and **5**E illustrate cross-sectional views of various additional stages in the fabrication of a back-contact solar cell, in accordance with an embodiment of the present invention.

[0041] Referring to operation **402** of flowchart **400**, and corresponding FIG. **5**A, a method of fabricating a back-contact solar cell includes forming an N-type dopant source layer **502** and a P-type dopant source layer **504** above a material layer **506** disposed above a substrate **508**. N-type dopant source layer **502** is spaced apart from P-type dopant source layer **504**, as depicted in FIG. **5**A.

[0042] In accordance with an embodiment of the present invention, forming N-type dopant source layer **502** and P-type dopant source layer **504** includes using an ink-jet deposition technique. In one embodiment, using the ink-jet deposition technique includes forming N-type dopant source layer **502** and P-type dopant source layer **504** at the same time. In one embodiment, using the ink-jet deposition technique includes forming N-type dopant source layer **502** and P-type dopant source layer **504** at different times. In an embodiment, forming N-type dopant source layer **502** and P-type dopant source layer **504** above material layer **506** disposed above substrate **508** includes forming a phosphorous-doped silicate glass layer and a boron-doped silicate glass layer, respectively, directly on a poly-crystalline silicon layer disposed above a single-crystalline silicon substrate. In an alternative embodiment, instead of forming a poly-crystalline material layer **506**, a non-poly-crystalline absorbing material is formed instead such as, but not limited to, an amorphous layer, a polymer layer, or a multi-crystalline layer. In another alternative embodiment, instead of using a single-crystalline substrate **508**, a multi-crystalline substrate is used in its place.

[0043] In an embodiment of the present invention, a dielectric film **510** is formed directly below material layer **506** and directly above substrate **508**, as depicted in FIG. **5**A. In one embodiment, dielectric film **510** is composed of silicon dioxide and has a thickness approximately in the range of 1-2 nanometers. In a specific embodiment, dielectric film **510** is a tunnel oxide barrier layer film.

[0044] Referring to operation **404** of flowchart **400**, and corresponding FIG. **5**B, the method of fabricating a back-contact solar cell further includes heating N-type dopant source layer **502** and P-type dopant source layer **504**.

[0045] In accordance with an embodiment of the present invention, heating N-type dopant source layer **502** and P-type dopant source layer **504** includes transferring N-type dopants and P-type dopants, respectively, into portions **512** and **514**, respectively, of material layer **506**, as depicted in FIG. **5**B. In one embodiment, heating N-type dopant source layer **502** and P-type dopant source layer **504** includes heating at a temperature of approximately 950 degrees Celsius. In one embodiment, heating N-type dopant source layer **502** and P-type dopant source layer includes hardening both N-type dopant source layer **502** and P-type dopant source layer **504**. In a specific embodiment, hardening both N-type dopant source layer **502** and P-type dopant source layer **504** increases the etch resistance of N-type dopant source layer **502** and P-type dopant source layer **504** during a subsequent trench formation, such as the trench formation described below.

[0046] Referring to operation **406** of flowchart **400**, and corresponding FIG. **5**C, the method of fabricating a back-contact solar cell further includes, subsequent to the heating of operation **404**, forming a trench **516** in material layer **506**, between N-type and P-type dopant source layers **502** and **504**, respectively.

[0047] In accordance with an embodiment of the present invention, forming trench **516** in material layer **506** includes forming a trench entirely through material layer **506** and partially into substrate **508**, trench **516** having a width approximately equal to the spacing of N-type and P-type dopant source layers **502** and **504**, respectively, as depicted in FIG. **5**C. In one embodiment, forming trench **516** includes texturing, with a textured surface **518**, surfaces of substrate **508** not covered by material layer **506**, as is also depicted in FIG. **5**C. In a specific embodiment, the texturing includes using a wet etch technique including a hydroxide-based wet etchant.

[0048] In an embodiment, referring to FIG. **5**D, a method of fabricating a back-contact solar cell further includes, subsequent to forming trench **516**, removing N-type dopant source layer **502** and P-type dopant source layer **504**. In one embodiment, removing N-type dopant source layer **502** and P-type dopant source layer **504** includes using a hydrofluoric acid wet etch technique.

[0049] In an embodiment, referring to FIG. **5**E, a method of fabricating a back-contact solar cell further includes, subsequent to removing N-type dopant source layer **502** and P-type

dopant source layer **504**, heating substrate **508**. In one embodiment, heating substrate **508** includes heating in the presence of a gaseous N-type dopant source and doping, with the gaseous N-type dopant source, substrate **508** at or near surfaces of substrate **508** not covered by material layer **506**, as depicted by the dopant regions **520** of FIG. **5**E.

[0050] Thus, methods of fabricating back-contact solar cells and devices thereof have been disclosed. In accordance with an embodiment of the present invention, a method of fabricating a back-contact solar cell includes forming an N-type dopant source layer and a P-type dopant source layer above a material layer disposed above a substrate. The N-type dopant source layer is spaced apart from the P-type dopant source layer. The N-type dopant source layer and the P-type dopant source layer are heated. Subsequently, a trench is formed in the material layer, between the N-type and P-type dopant source layers. In an additional embodiment, subsequent to forming the trench, the N-type dopant source layer and the P-type dopant source layer are removed. In another additional embodiment, subsequent to removing the N-type dopant source layer and the P-type dopant source layer, the substrate is heated.

What is claimed is:

1. A method of fabricating a back-contact solar cell, the method comprising:

forming an N-type dopant source layer and a P-type dopant source layer above a material layer disposed above a substrate, the N-type dopant source layer spaced apart from the P-type dopant source layer;

heating the N-type dopant source layer and the P-type dopant source layer; and, subsequently,

forming a trench in the material layer, between the N-type and P-type dopant source layers.

2. The method of claim **1**, further comprising:

subsequent to forming the trench, removing the N-type dopant source layer and the P-type dopant source layer.

3. The method of claim **2**, further comprising:

subsequent to removing the N-type dopant source layer and the P-type dopant source layer, heating the substrate.

4. The method of claim **1**, wherein forming the N-type dopant source layer and the P-type dopant source layer comprises using an ink-jet deposition technique.

5. The method of claim **4**, wherein using the ink-jet deposition technique comprises forming the N-type dopant source layer and the P-type dopant source layer at the same time.

6. The method of claim **4**, wherein using the ink-jet deposition technique comprises forming the N-type dopant source layer and the P-type dopant source layer at different times.

7. The method of claim **1**, wherein forming the N-type dopant source layer and the P-type dopant source layer above the material layer disposed above the substrate comprises forming a phosphorous-doped silicate glass layer and a boron-doped silicate glass layer, respectively, directly on a poly-crystalline silicon layer disposed above a single-crystalline silicon substrate.

8. The method of claim **1**, wherein heating the N-type dopant source layer and the P-type dopant source layer comprises transferring N-type dopants and P-type dopants, respectively, into portions of the material layer.

9. The method of claim **8**, wherein heating the N-type dopant source layer and the P-type dopant source layer comprises heating at a temperature of or substantially near 950 degrees Celsius.

10. The method of claim **8**, wherein heating the N-type dopant source layer and the P-type dopant source layer comprises hardening both the N-type dopant source layer and the P-type dopant source layer.

11. The method of claim **1**, wherein forming the trench in the material layer comprises forming a trench entirely through the material layer and partially into the substrate, the trench having a width substantially equal to the spacing of the N-type and P-type dopant source layers.

12. The method of claim **11**, wherein forming the trench comprises texturing, with a textured surface, surfaces of the substrate not covered by the material layer.

13. The method of claim **2**, wherein removing the N-type dopant source layer and the P-type dopant source layer comprises using a hydrofluoric acid wet etch technique.

14. The method of claim **3**, wherein heating the substrate comprises heating in the presence of a gaseous N-type dopant source and doping, with the gaseous N-type dopant source, the substrate at or near surfaces of the substrate not covered by the material layer.

15. A back-contact solar cell, comprising:

a material layer disposed above a substrate; and

a trench disposed in the material layer, the trench separating an N-type region and a P-type region of the material layer, the P-type region comprising a dopant concentration directly adjacent to the trench substantially equal to a dopant concentration in the center of the P-type region.

16. The back-contact solar cell of claim **15**, wherein the material layer is a poly-crystalline silicon layer, the substrate is a single-crystalline silicon substrate, the P-type region comprises boron dopant impurity atoms, and the N-type region comprises phosphorous dopant impurity atoms.

17. The back-contact solar cell of claim **15**, wherein the trench is disposed entirely through the material layer and partially into the substrate.

18. The back-contact solar cell of claim **17**, wherein surfaces of the substrate not covered by the material layer comprise a textured surface.

19. The back-contact solar cell of claim **15**, wherein the substrate comprises N-type dopants at or near surfaces of the substrate not covered by the material layer.

20. The back-contact solar cell of claim **15**, further comprising:

a dielectric film disposed directly between the material layer and the substrate.

* * * * *