UNITED STATES PATENT AND TRADEMARK OFFICE

BEFORE THE PATENT TRIAL AND APPEAL BOARD

YEALINK (USA) NETWORK TECHNOLOGY CO., LTD., and
YEALINK NETWORK TECHNOLOGY CO., LTD.
Petitioners,

v.

BARCO N.V.
Patent Owner

U.S. Patent No. 10,684,972
IPR2025-00491

**DECLARATION OF KEVIN C. ALMEROTH, PH.D.,
IN SUPPORT OF PETITION FOR *INTER PARTES* REVIEW
OF U.S. PATENT NO. 10,684,972**

YEALINK Ex-1002

BARCO EXHIBIT 2020
Yealink v. Barco
IPR2025-00597

TABLE OF CONTENTS

I. INTRODUCTION 4
II. QUALIFICATIONS / PROFESSIONAL BACKGROUND 5
III. MATERIALS REVIEWED 18
IV. LEVEL OF ORDINARY SKILL IN THE ART 21
V. BACKGROUND OF THE TECHNOLOGY 22
VI. OVERVIEW OF THE ’972 PATENT 41
A. Prior Art Techniques Acknowledged by the ’972 patent 41
B. The Purported Invention 42
C. Prosecution History 43
VII. CLAIM CONSTRUCTION 44
A. “*functional device*” (Claims 1-3, 5-11, 13-16) 48
B. “generic communications protocol” (Claims 1, 9, 15) 48
C. *“coupled ... / “coupling ... via a generic communications protocol”* (Claims 1, 9, 15) .. 51
D. *“unified communication”* (Claims 1, 5, 9, 13, 15) 51
E. “*means for encoding, optionally encrypting*” (Claims 4, 12) 51
F. *“at least one fixed or a configurable endpoint, where the at least one fixed or a configurable endpoint is a data source or a data sink which is able to store or emit data, of the functional device exposed or made available on the first peripheral device”* (Claims 1, 3, 9, 11, 15, 16, 18) 52
VIII. OVERVIEW OF THE PRIOR ART 58
A. Beel (Ex-1005) 58
B. Dinka (Ex-1006) 59
C. Kaplan (Ex-1008) 60
D. Van de Laar (Ex-1007) 62
E. Christison (Ex-1011) 64
F. Applicant-Admitted Prior Art (“AAPA”) 65
IX. THE PRIOR ART DISCLOSES AND/OR SUGGESTS THE RECITED FEATURES OF CLAIMS 1-18 OF THE ’972 PATENT 66
A. Claims 1-18 of the ’972 Patent Are Unpatentable as Obvious Over Beel in View of Dinka and Optionally in View of Christison 66
B. Claims 1-18 of the ’972 Patent Are Unpatentable as Obvious Over the Combination of Kaplan and Van De Laar and Optionally in View of Christison 94

X. CONCLUSION 123

I, Kevin C. Almeroth Ph.D., declare as follows:

I. INTRODUCTION

1. I have been retained by Yealink (USA) Network Technology Co., Ltd. and Yealink Network Technology Co., Ltd. (collectively, "Petitioners") as an independent expert consultant in this proceeding before the United States Patent and Trademark Office ("PTO") regarding U.S. Patent No. 10,684,972 ("the '972 patent") (Ex-1001).

2. My name is Kevin C. Almeroth and I am a Professor Emeritus of Computer Science at the University of California, Santa Barbara. I have prepared this declaration as an expert witness on behalf of Petitioners. In this declaration, I will give my opinion as to whether claims 1-5 of the '972 patent are unpatentable. I also provide herein the technical bases for these opinions, as appropriate.

3. For my efforts in connection with the preparation of this declaration, I have been compensated at my usual and customary rate for this type of consulting activity. My compensation is in no way contingent on the outcome of these or any other proceedings.

4. I have been asked to consider whether certain references disclose or suggest the features recited in claims 1-18 of the '972 patent. My opinions are set forth below.

II. QUALIFICATIONS / PROFESSIONAL BACKGROUND

5. I am currently a Professor Emeritus in the Department of Computer Science at the University of California, Santa Barbara (UCSB). All of my opinions stated in this declaration are based on my own personal knowledge and professional judgment. In forming my opinions, I have relied on my knowledge and experience in designing, developing, researching, and teaching regarding computer networks and protocols, wireless networking, multicast communication, large-scale multimedia systems, and mobile applications.

6. I am over 18 years of age and, if I am called upon to do so, I would be competent to testify as to the matters set forth herein. I understand that a copy of my current curriculum vitae, which details my education and professional and academic experience, is being submitted by Petitioner as Exhibit 1003. The following provides an overview of some of my experience that is relevant to the matters set forth in this declaration.

7. While at UCSB, I have held faculty appointments and was a founding member of the Computer Engineering (CE) Program, Media Arts and Technology (MAT) Program, and the Technology Management Program (TMP). I have also served as the Associate Director of the Center for Information Technology and

Society (CITS) from 1999 to 2012. I have been a faculty member at UCSB since July 1997.

8. I hold three degrees from the Georgia Institute of Technology: (1) a Bachelor of Science degree in Information and Computer Science (with minors in Economics, Technical Communication, and American Literature) earned in June 1992; (2) a Master of Science degree in Computer Science (with specialization in Networking and Systems) earned in June 1994; and (3) a Doctor of Philosophy (Ph.D.) degree in Computer Science (Dissertation Title: Networking and System Support for the Efficient, Scalable Delivery of Services in Interactive Multimedia System, minor in Telecommunications Public Policy) earned in June 1997. During my education, I took a wide variety of courses as demonstrated by my minors. My undergraduate degree also included a number of courses more typical of a degree in electrical engineering including digital logic, signal processing, and telecommunications theory.

9. One of the major concentrations of my research over the past 30+ years has been the delivery of multimedia content and data between computing devices, including through various network architectures. In my research, I have studied large-scale content delivery systems, and the use of servers located in a variety of geographic locations to provide scalable delivery to hundreds or thousands of users

simultaneously. I have also studied smaller-scale content delivery systems in which content is exchanged between individual computers and portable devices. My work has emphasized the exchange of content more efficiently across computer networks, including the scalable delivery of content to many users, mobile computing, satellite networking, delivering content to mobile devices, and network support for data delivery in wireless networks.

10. In 1992, the initial focus of my research was on the provision of interactive functions (e.g., VCR-style functions like pause, rewind, and fast-forward) for near video-on-demand systems in cable systems; in particular, how to aggregate requests for movies at a cable head-end and then how to satisfy a multitude of requests using one audio/video stream broadcast to multiple receivers simultaneously. This research has continually evolved and resulted in the development of techniques to scale the delivery of on-demand content, including audio, video, web documents, and other types of data, through the Internet and over other types of networks, including over cable systems, broadband telephone lines, and satellite links.

11. An important component of my research has been investigating the challenges of communicating multimedia content, including video, between computers and across networks including the Internet. Although the early Internet

was used mostly for text-based, non-real time applications, the interest in sharing multimedia content, such as video, quickly developed. Multimedia-based applications ranged from downloading content to a device to streaming multimedia content to be instantly used. One of the challenges was that multimedia content is typically larger than text-only content, but there are also opportunities to use different delivery techniques since multimedia content is more resilient to errors. I have worked on a variety of research problems and used a number of systems that were developed to deliver multimedia content to users. One content-delivery method I have researched is the one-to-many communication facility called "multicast," first deployed as the Multicast Backbone, a virtual overlay network supporting one-to-many communication. Multicasting is one technique that can be used on the Internet to provide streaming media support for complex applications like video-on-demand, distance learning, distributed collaboration, distributed games, and large-scale wireless communication. The delivery of media through multicasting often involves using Internet infrastructure, devices and protocols, including protocols for routing and TCP/IP.

12. Starting in 1997, I worked on a project to integrate the streaming media capabilities of the Internet together with the interactivity of the web. I developed a project called the Interactive Multimedia Jukebox (IMJ). Users would visit a web

page and select content to view. The content would then be scheduled on one of a number of channels, including delivery to students in Georgia Tech dorms delivered via the campus cable plant. The content of each channel was delivered using multicast communication.

13. In the IMJ, the number of channels varied depending on the capabilities of the server including the available bandwidth of its connection to the Internet. If one of the channels was idle, the requesting user would be able to watch their selection immediately. If all channels were streaming previously selected content, the user's selection would be queued on the channel with the shortest wait time. In the meantime, the user would see what content was currently playing on other channels, and because of the use of multicast, would be able to join one of the existing channels and watch the content at the point it was currently being transmitted.

14. The IMJ service combined the interactivity of the web with the streaming capabilities of the Internet to create a jukebox-like service. It supported true Video-on-Demand when capacity allowed, but scaled to any number of users based on queuing requested programs. As part of the project, we obtained permission from Turner Broadcasting to transmit cartoons and other short-subject content. We also connected the IMJ into the Georgia Tech campus cable television network so

that students in their dorms could use the web to request content and then view that content on one of the campus's public access channels.

15. More recently, I have also studied issues concerning how users choose content, especially when considering the price of that content. My research has examined how dynamic content pricing can be used to control system load. By raising prices when systems start to become overloaded (*i.e.*, when all available resources are fully utilized) and reducing prices when system capacity is readily available, users' capacity to pay as well as their willingness can be used as factors in stabilizing the response time of a system. This capability is particularly useful in systems where content is downloaded or streamed on-demand to users.

16. As a parallel research theme, starting in 1997, I began researching issues related to wireless devices and sensors. In particular, I was interested in showing how to provide greater communication capability to "lightweight devices," *i.e.*, small form-factor, resource-constrained (*e.g.*, CPU, memory, networking, and power) devices. Starting in 1998, I published several papers on my work to develop a flexible, lightweight, battery-aware network protocol stack. The lightweight protocols we envisioned were similar in nature to protocols like Bluetooth, Universal Plug and Play (UPnP) and Digital Living Network Alliance (DLNA).

17. From this initial work, I have made wireless networking—including ad hoc, mesh networks and wireless devices—one of the major themes of my research. My work in wireless networks spans the protocol stack from applications through to the encoding and exchange of data at the data link and physical layers.

18. At the application layer, even before the large-scale "app stores" were available, my research looked at building, installing, and using apps for a variety of purposes, from network monitoring to support for traditional computer-based applications (*e.g.,* content retrieval) to new applications enabled by ubiquitous, mobile devices. For example, my research has looked at developing applications for virtually exchanging and tracking "coupons" through "opportunistic contact" among mobile wireless devices (*i.e.,* communication among devices moving into communication range with each other). In many of the courses I have taught there is a project component. Through these projects I have supervised numerous efforts to develop new "apps" for download and use across a variety of mobile platforms.

19. Toward the middle of the protocol stack, my research has also looked to build wireless infrastructure support to enable communication among a set of mobile devices unaided by any other kind of network infrastructure. These kinds of networks are useful either in challenged network environments (e.g., when a natural disaster has destroyed existing infrastructure) or when suitable support for network

communication never existed. The deployment of such networks (or even the use of traditional network support) are critical to support services like disaster relief, catastrophic event coordination, and emergency services deployment.

20. Yet another theme of my research has been monitoring wireless networks, in particular different variants of IEEE 802.11 compliant networks, to (1) understand the operation of the various protocols used in real-world deployments, (2) use these measurements to characterize use of the networks and identify protocol limitations and weaknesses, and (3) propose and evaluate solutions to these problems. I have successfully used monitoring techniques to study wireless data link layer protocol operation and to improve performance by enhancing the operation of such protocols. For wireless protocols, this research includes functions like network acquisition and channel bonding.

21. One theme in my wireless network research has been cross-layer solutions and innovations. As mentioned above, with greater wireless device use and network support, we envisioned new application paradigms and services, for example, when mobile devices come into contact with each other. Instead of relying on existing infrastructure to relay communication, mobile devices are able to discover each other and communicate directly. Other examples include discovering and using location information to enhance users' experiences. Network support and

novel applications span the use of a variety of network architectures supporting users on foot, in vehicles, and across varying terrains and environments. Finally, we studied how communication efficiency can be supported through intelligent handoffs as well as location and movement prediction.

22. Protecting networks, including their operation and content, has been an underlying theme of my research almost since the beginning of my research career. Since 2000, I have been involved in several projects that specifically address security, network protection, and firewalls. After significant background work, a team on which I was a member successfully submitted a $4.3M grant proposal to the Army Research Office (ARO) at the Department of Defense to propose and develop a high-speed intrusion detection system. Key aspects of the system included associating streams of packets and analyzing them for viruses and other malware. Once the grant was awarded, we spent several years developing and meeting the milestones of the project. Several of my students worked on related projects and published papers on topics ranging from intrusion detection to developing advanced techniques to be incorporated into firewalls. I have also used firewalls, including their associated malware detection features, in developing techniques for the classroom to ensure that students are not distracted by online content.

23. My recent work ties some of the various threads of my past research together. I have investigated content delivery in online social networks and proposed reputation management systems in large-scale social networks and marketplaces. On the content delivery side, I have looked at issues of caching and cache placement, especially when content is shared and the cache has geographical relevance. We were able to show that effective caching strategies can greatly improve performance and reduce deployment costs.

24. As an important component of my research program, I have been involved in the development of academic research into available technology in the marketplace. One aspect of this work is my involvement in the Internet Engineering Task Force (IETF). The IETF is a large and open international community of network designers, operators, vendors, and researchers concerned with the evolution of Internet architecture and the smooth operation of the Internet. I have been involved in various IETF groups including content delivery-related working groups like the Audio Video Transport (AVT) group, the MBone Deployment (MBONED) group, Source Specific Multicast (SSM) group, the Inter-Domain Multicast Routing (IDMR) group, the Reliable Multicast Transport (RMT) group, the Protocol Independent Multicast (PIM) group, etc. I have also served as a member of the Multicast Directorate (MADDOGS), which oversaw the standardization of all things

related to multicast in the IETF. Finally, I was the Chair of the Internet2 Multicast Working Group for seven years.

25. My involvement in the research community extends to leadership positions for several academic journals and conferences. I am the co-chair of the Steering Committee for the ACM Network and System Support for Digital Audio and Video (NOSSDAV) workshop and on the Steering Committees for the International Conference on Network Protocols (ICNP), ACM Sigcomm Workshop on Challenged Networks (CHANTS), and IEEE Global Internet (GI) Symposium. I have served or am serving on the Editorial Boards of IEEE/ACM Transactions on Networking, IEEE Transactions on Mobile Computing, IEEE Network, ACM Computers in Entertainment, AACE Journal of Interactive Learning Research (JILR), and ACM Computer Communications Review. I have co-chaired a number of conferences and workshops including the IEEE International Conference on Network Protocols (ICNP), IEEE Conference on Sensor, Mesh and Ad Hoc Communications and Networks (SECON), International Conference on Communication Systems and Networks (COMSNETS), IFIP/IEEE International Conference on Management of Multimedia Networks and Services (MMNS), the International Workshop On Wireless Network Measurement (WiNMee), ACM Sigcomm Workshop on Challenged Networks (CHANTS), the Network Group

Communication (NGC) workshop, and the Global Internet Symposium, and I have served on the program committees for numerous conferences.

26. Furthermore, in the courses I taught at UCSB, a significant portion of my curriculum covered aspects of the Internet and network communication including the physical and data link layers of the Open System Interconnect (OSI) protocol stack, and standardized protocols for communicating across a variety of physical media such as cable systems, telephone lines, wireless, and high-speed Local Area Networks (LANs). The courses I have taught also cover most major topics in Internet communication, including data communication, multimedia encoding, and mobile application design. My research and courses have covered a range of physical infrastructures for delivering content over networks, including cable, Integrated Services Digital Network (ISDN), Ethernet, Asynchronous Transfer Mode (ATM), fiber, and Digital Subscriber Line (DSL). For a complete list of courses I have taught, see my curriculum vitae (CV) (Ex-1003).

27. In addition, I co-founded a technology company called Santa Barbara Labs that was working under a sub-contract from the U.S. Air Force to develop very accurate emulation systems for the military's next generation internetwork. Santa Barbara Labs' focus was in developing an emulation platform to test the performance characteristics of the network architecture in the variety of

environments in which it was expected to operate, and, in particular, for network services including IPv6, multicast, Quality of Service (QoS), satellite-based communication, and security. Applications for this emulation program included communication of a variety of multimedia-based services, including video conferencing and video-on-demand.

28. In addition to having co-founded a technology company myself, I have worked for, consulted with, and collaborated with companies for nearly 30 years. These companies range from well-established companies to start-ups and include IBM, Hitachi Telecom, Turner Broadcasting System (TBS), Bell South, Digital Fountain, RealNetworks, Intel Research, Cisco Systems, and Lockheed Martin.

29. Through my graduate education, leadership with CITS, involvement in TMP, role in the development of the Internet2 infrastructure, and consulting with ISPs, I have gained a strong understanding in the role of the Internet in our society and the challenges of deploying large-scale production networking infrastructure. CITS, since its inception, has looked at the role of the Internet in society, including how the evolution of technology has created communication opportunities and challenges, including, for example through disruptive technologies like P2P. TMP looks to focus on non-purely technical issues, including, for example, state-of-the-art business methods, strategies for successful technology commercialization, new

venture creation, and best practices for fostering innovation. Through my industry collaborations and Internet2 work, I have developed significant experience in the challenges of deploying, monitoring, managing, and scaling communication infrastructure to support evolving Internet services like streaming media, conferencing, content exchange, social networking, and e-commerce.

30. I am a Member of the Association of Computing Machinery (ACM) and a Fellow of the Institute of Electrical and Electronics Engineers (IEEE).

III. MATERIALS REVIEWED

31. The opinions contained in this Declaration are based on the documents I reviewed, my professional judgment, as well as my education, experience, and knowledge regarding, for example, electronic meeting tools, methods of displaying and transmitting audiovisual media content, audiovisual display systems, wireless network communication, user interfaces, plug-and-play architectures, and video conferencing applications.

32. In forming my opinions expressed in this Declaration, I reviewed the following materials and information:

EXHIBIT	DESCRIPTION
Ex-1001	U.S. Patent No. 10,684,972 ("'972 patent")
Ex-1003	Curriculum Vitae of Kevin C. Almeroth, Ph.D.

Ex-1004	File History of U.S. Patent No. 10,684,972
Ex-1005	U.S. Patent Application Publication No. 2015/0169477 ("Beel")
Ex-1006	U.S. Patent No. 8,369,498 ("Dinka")
Ex-1007	U.S. Patent Application Publication No. 2016/0014172 ("Van de Laar")
Ex-1008	U.S. Publication No. 2010/0295994 ("Kaplan")
Ex-1009	Skype Webpage (Archived Sept. 14, 2012) (https://web.archive.org/web/20120914232239/http://www.skype.com/intl/en-us/home) (accessed Jan. 11, 2025)
Ex-1010	USB Endpoints and Their Pipes - Windows drivers _ Microsoft Learn.pdf (https://learn.microsoft.com/en-us/windows-hardware/drivers/usbcon/usb-endpoints-and-their-pipes) (accessed January 15, 2024)
Ex-1011	U.S. Patent No. 7,761,627 ("Christison")
Ex-1012	EP3732827B1 ("Renard")
Ex-1013	Skype Webpage (Archived Nov. 28, 2015) (https://web.archive.org/web/20151128100316/http://www.skype.com/en/) (accessed Jan. 11, 2025)
Ex-1014	U.S. Patent Application Publication No. 2002/0196378 ("Slobodin")
Ex-1015	U.S. Patent Application Publication No. 2008/0074560 ("Ichieda")
Ex-1016	English Translation of JP Patent Application Publication No. 2007-208606 ("Maeda")
Ex-1017	JP Patent Application Publication No. 2007-208606
Ex-1018	Certification for English Translation of JP Patent Application Publication No. 2007-208606
Ex-1019	U.S. Patent Application Publication No. 2002/0174254 ("Kita")
Ex-1020	U.S. Patent Application Publication No. 2005/0210390 ("Ono")

Ex-1021	EP Patent Application Publication No. 2107463 ("Deforche")
Ex-1022	U.S. Patent Application Publication No. 2009/0172219 ("Mardiks
Ex-1023	English Translation of Japanese Patent Application Publication No. 2008-165007 ("Uchida")
Ex-1024	JP Patent Application Publication No. 2008-165007
Ex-1025	Certification for English Translation of Japanese Patent Application Publication No. 2008-165007
Ex-1026	Imation Wireless Projection Link User Guide
Ex-1027	EZAir Press Release, "EZAir Wireless PC to TV Solutions Now Available Across Europe," March 16, 2011
Ex-1028	Warpia Product Brief, "Wireless USB PC to TV Audio/Video Display Adapter," 2009
Ex-1029	Q-Waves Product Overview, "Quicklink TV," November 2010
Ex-1030	IOGear Installation Guide, "Wireless USB to VGA Kit," 2008
Ex-1031	Dictionary definition of "Communication Protocol"
Ex-1032	WIPO Publication No. WO 2012/128972 ("Scragg")
Ex-1033	Wi-Fi Security Webpage (Archived Aug. 16, 2017) (https://web.archive.org/web/20170816134219/http://www.wi-fi.org/discover-wi-fi/security) (accessed Jan. 16, 2025)

33. I also reviewed any other materials I refer to in this Declaration in support of my opinions.

34. My opinions contained in this declaration are based on the documents I reviewed and my knowledge and professional judgment. My opinions have also been guided by my appreciation of how a person of ordinary skill in the art ("POSA") would have understood the state of the art, the teachings of the prior art, and the

claim terms and the specification of the ’972 patent at the time of the alleged invention. My opinions reflect how a POSA (which I have described below) would have understood the ’972 patent, the prior art, the knowledge of a POSA and the state of the art at the time of the alleged invention. I have been asked to initially consider that the time of the alleged invention of the ’972 patent is around December 29, 2017 (the earliest date to which the ’972 patent claims the benefit of priority). However, even if a modestly earlier or later date were selected it would not alter my opinions.

35. Based on my experience and expertise, it is my opinion that the prior art discloses and/or suggests all the features recited in challenged claims 1-18 of the ’972 patent, as I discuss in detail below.

IV. LEVEL OF ORDINARY SKILL IN THE ART

36. In determining the skills of a hypothetical POSA of the ’972 patent at the time of the claimed invention, I considered several things, including various prior art techniques for screen scraping, wireless transmission of media content, wireless networking, user input/control, peripheral device interfaces, and device drivers. I also considered the type of problems that such techniques gave rise to and the rapidity with which innovations were made. I also considered the sophistication of

the technologies involved and the educational background and experience of those actively working in the field.

37. For the purposes of my analysis, I have been asked to assume that a POSA in the field of art of the ’972 patent would have had at least a Master’s Degree in Electrical Engineering with at least five years of work experience in computer science and embedded systems, or a Master’s Degree in Computer Science with at least five years of work experience in electrical and computer engineering and embedded systems. Additional educational experience could substitute for some of the work experience. My opinions below have taken that into account and reflect that level of skill in determining the content of the prior art and what it would have suggested to a POSA.

V. BACKGROUND OF THE TECHNOLOGY

38. At the time of the alleged invention, media sharing between electronic devices was well established and used in an increasing variety of applications to share media data between devices. In the decades before the alleged invention, a wide array of electronic tools were developed to facilitate meetings and share content among individuals, particularly in business and educational settings. As acknowledged by the ’972 patent, there has been “an explosion” of such tools by the time of the alleged invention. Ex-1001, 1:12-23. By the 2000s, there was already

"widespread acceptance of using computers to facilitate group communications." Ex-1014, ¶4.

39. The oldest solutions involved wired connections between electronic devices. As wireless networking techniques became more common, wireless applications to electronic tools became prevalent. Indeed, by the time of the alleged invention in late 2017, acknowledged by the '972 patent and discussed in more detail below, wireless networks were commonplace and widespread from classrooms to boardrooms.

40. Wireless media sharing arose, in part, from the recognition that sharing media content from one device to one or more separate devices (in settings such as a meeting, presentation, *etc*.) using physical cable connections presented certain physical limitations. For example, one limitation with physical cable connections was the case in which multiple presenters wish to perform presentations while taking turns using respective personal computers (PCs). Ex-1015, ¶4; *see also* Ex-1016[1], ¶3 (recognizing the limitation of physical cable connections in meetings requires

[1] This is the English Translation (Ex-1016) to JP Patent Application Publication No. 2008-165007 (Ex-1017). All citations are to the English Translation (Ex-1016). Ex-1018 is the corresponding certificate of certified translation.

physically reconnecting each electronic device to share media on separate electronic devices). By designing systems utilizing wireless communication, between a media device (*i.e.*, computer) and a display device (*i.e.*, a second computer, projector, or similar device), "the cable can be prevented from becoming an obstacle." *Id.*

41. Techniques developed for wirelessly sharing media content included sharing content displayed on a laptop computer or other portable electronic device with another, separate display, for example, in a conference room. Although early on bandwidth of the wireless systems was a potential issue, to address this problem, US Patent Application Publication No. 2002/0196378 ("Slobodin") proposed a method and apparatus for wireless transmission of "screen scraped" images to a projector to reduce the amount of transmission bandwidth. Ex-1014, Title, Abstract, ¶¶12-14. As shown in FIG. 1 of Slobodin (reproduced below), an image-generating device 110 (*e.g.*, a laptop computer) generates a digital image on a display device 111 that is transmitted over a wireless link 120 to a remote presentation projector 130 for projection 145 by a presenter 150. Ex-1014, ¶33. Screen scraping was used to capture display data that was then transmitted to the projector. Ex-1014, ¶¶12-14. The '972 patent borrows this same screen scraping technique from Slobodin. *See* Ex-1001, 7:14-18.

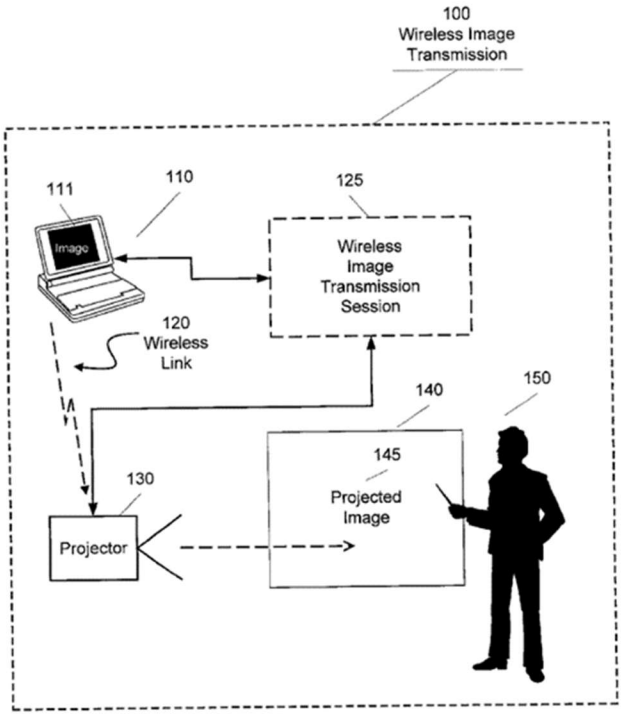

Ex-1014, FIG. 1.

42. As wireless networking technology progressed, focus shifted to making the tools more user-friendly and pluralistic. For example, efforts focused on making it easier for multiple users to establish network connections to implement wireless communication for image sharing. *See*, *e.g.*, Ex-1019, ¶¶1-8. U.S. Patent Application Publication No. 2002/0174254 ("Kita") (Ex-1019) describes a system in which network interface cards were preconfigured to connect to a wireless LAN, such that multiple computers 11 could be wirelessly connected to a projector 16 by merely inserting one of these interface cards 11 without participants needing to configure a network connection. *See*, *e.g.*, Ex-1019, ¶¶14-17, FIGS. 3 and 18, reproduced below.

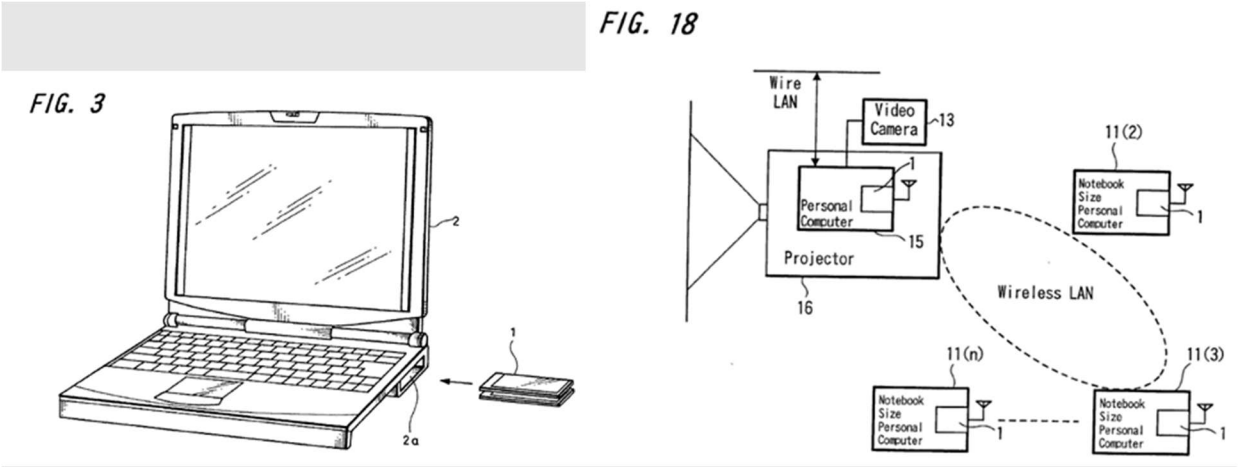

Ex-1019, FIGs. 3, 18.

43. During the 2000s, wireless technology shifted from wireless LAN cards, as described by Kita, to the increasingly more ubiquitous Universal Bus Standard (USB) standard. A range of plug-and-play USB-type devices emerged for sharing both image and audio. For example, U.S. Patent Application Publication No. 2005/0210390 ("Ono") proposed the use of USB-type "communication modules" to wirelessly connect an image projector with multiple "information terminal apparatuses," depicted below as laptop personal computers. Ex-1020, ¶¶36-39. The communications modules plug into a USB port of the information terminal apparatuses and wirelessly transmit images via a wireless network from the laptop display to a corresponding wireless connection module coupled to the image projector. Ex-1020, ¶¶36-39, 54. Further, it was already taught in the prior art to use pre-installed drivers to operate a standard class of USB computer peripheral devices such as human interface devices (HID). *See* Ex-1021, ¶10; *see additionally*, Ex-

1022, ¶3. In fact, "HID and MSD [mass storage device] drivers [were] known per se in the art." Ex-1021, ¶10.

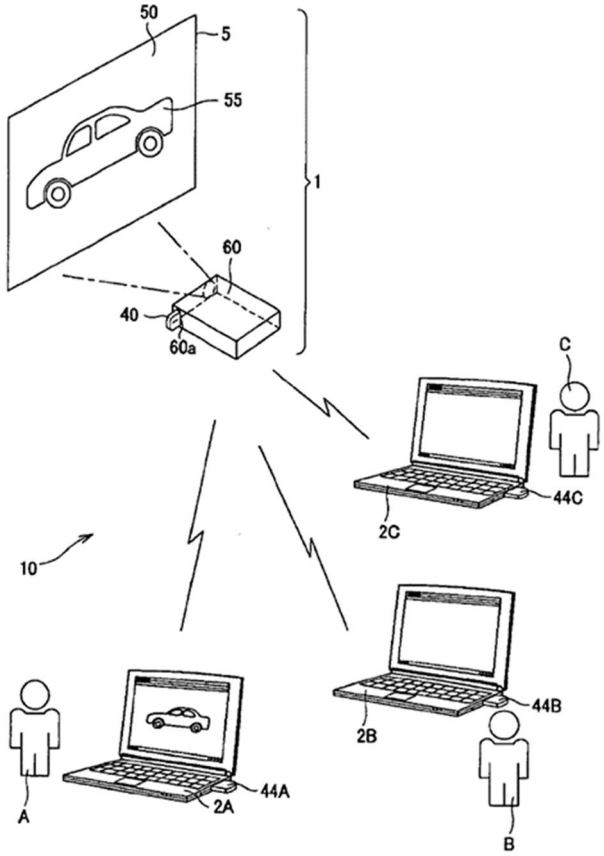

Ex-1020, FIG. 1.

44. By the priority date of the '972 patent, a POSA would have understood that the USB protocol had become widely accepted as a standard for connecting devices and/or sharing data between devices. A POSA would have further understood that USB devices must implement and adhere to the USB standard for compatibility across USB devices or devices compatible with USB devices.

45. Specifically, USB utilizes "endpoints." As discussed in the Universal Serial Bus Specification, Revision 2.0, an "endpoint is a uniquely identifiable portion of a USB device that is the terminus of a communication flow between the host and device. Each USB logical device is composed of a collection of independent endpoints." Universal Serial Bus Specification, Revision 2.0, pg. 33 (April 27, 2000) (last accessed Jan. 15, 2025) (http://www.poweredusb.org/pdf/usb20.pdf). Essentially, data flows through the endpoints of a USB device from one data source/sink (*i.e.*, the USB device) to another data source/sink (*i.e.*, the host). Hence, data can be sent to or from an endpoint, and each end of the communication channel between connected USB devices has its own endpoint for the data to be sent to or from.

46. A USB functional device can have multiple endpoints, *i.e.*, the client software and the firmware on the device can exchange multiple separate streams of data. Endpoint zero is reserved on each device for control communication with the USB system. USB devices can have additional endpoints as required to implement their functions. *Id.*, at 34.

47. USB device technology expanded to include wirelessly connected USB devices. For example, WIPO Publication No. WO 2012/128972 ("Scragg") described a system to wirelessly connect USB devices over a distance. Scragg's

system disclosed the ability to "virtualize" a USB device attached to a local/client user computer which could "remotely connect to a server." Ex-1032, ¶15. In this way, a USB device attached to a local/client user's computer system could be used by a second/target computer "anywhere in the world." *Id.* The second/target computer could then "interact[] with the local user's computer and USB device over a network." *Id.* Scragg further discloses that the connection between the USB devices at the local/client and target computer is capable of transmitting video and mouse/keyboard data. *Id.*, at ¶¶20, 24. Scragg's system further discloses the video data is capable of rendering, such as display on a client monitor 108. *Id.*, at ¶26. Scragg explains that the USB device is "virtualized" because the USB device attached to the target computer "emulates the signals received" from the USB device attached to the local/client computer. *Id.*, at ¶35. FIG. 3 demonstrating Scragg's system is reproduced below:

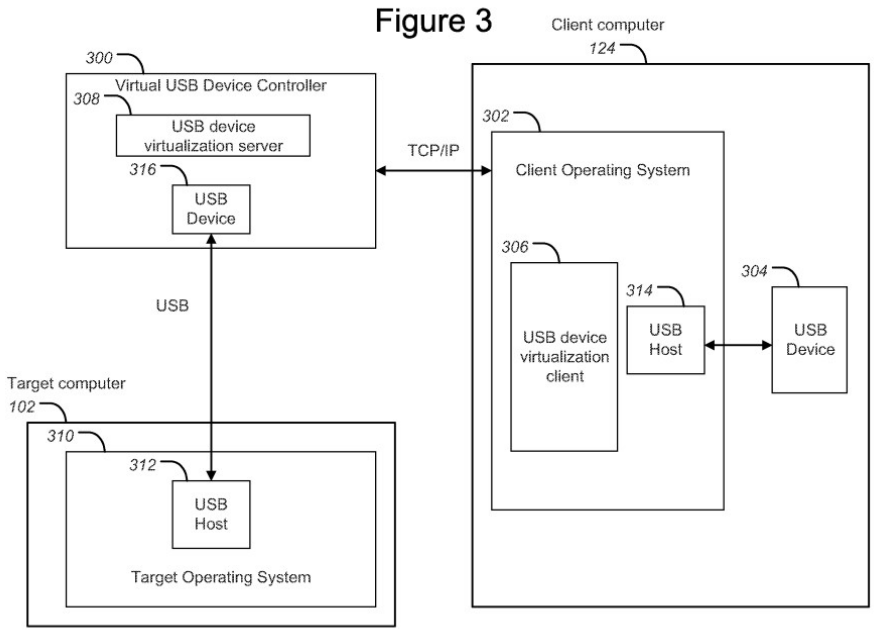

Ex-1032, FIG. 3.

48. Japanese Patent Application Publication No. 2008-165007 ("Uchida") (Ex-1023[2]) described an image projection system. Uchida describes a personal computer device 4 wirelessly connected to an image projection device 3 (*e.g.*, a projector) via a wireless device 1. *See*, *e.g.*, Ex-1023, ¶39 and FIG. 1, reproduced below. The wireless device 1 is described as a USB dongle. Ex-1023, ¶39. The wireless device 1 is connected to the computer 4 and transmitted image data from

[2] This is the English Translation (Ex-1023) to JP Patent Application Publication No. 2008-165007 (Ex-1024). All citations are to the English Translation (Ex-1023). Ex-1025 is the corresponding certificate of certified translation.

the computer 4 to the image projection device 3 for display. Wireless setting information is automatically provided without requiring a user to enter this information—thereby making it more convenient for the user to make use of the tool. Ex-1023, ¶¶41-44.

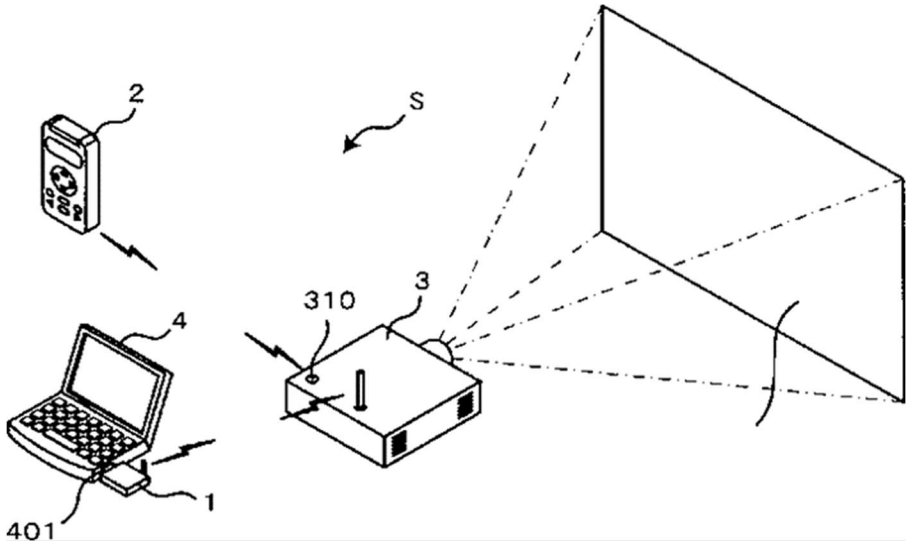

Ex-1023, FIG. 1.

49. Likewise, Japanese Patent Application Publication No. 2007-208606 ("Maeda") disclosed using a PC as an image generation device to generate images and audio, to be transmitted to a projector using a wireless local area network (LAN). Ex-1016, ¶15. In operation, the "screen displayed on the display of PC 100 is transmitted from PC 100 to projector 200 and the screen received by projector 200 is projected onto a screen 30. A wireless LAN card 10 containing a wireless LAN chip is attached to PC 100, thereby transmitting image signals and audio signals to projector 200 via the wireless LAN." Ex-1016, ¶17.

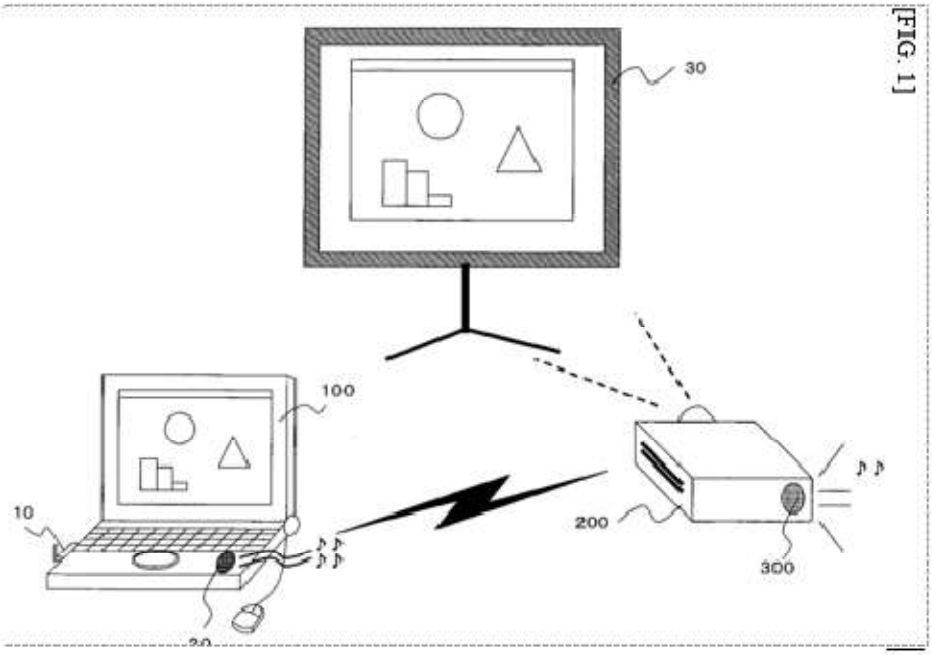

Ex-1016, FIG. 1

50. Near the end of the 2000s, the availability of greater wireless bandwidth led to greater amounts of media content being streamed wirelessly to different devices. For example, using wirelessly connected USB devices connected to separate devices similar to the system of Scragg described above, U.S. Patent Application Publication No. 2010/0295994 ("Kaplan") (Ex-1008) describes a communications system in which a computer 220 is wirelessly connected to a display device 210 via a USB transmitter 120. *See*, *e.g.*, Ex-1008, ¶¶16-18 and FIG. 2, reproduced below. The transmitter is pre-paired with a receiver 110 connected to the display device 210, such that a user does not need to configure the wireless connection. *See* Ex-1008, ¶18. I discuss Kaplan in greater detail below.

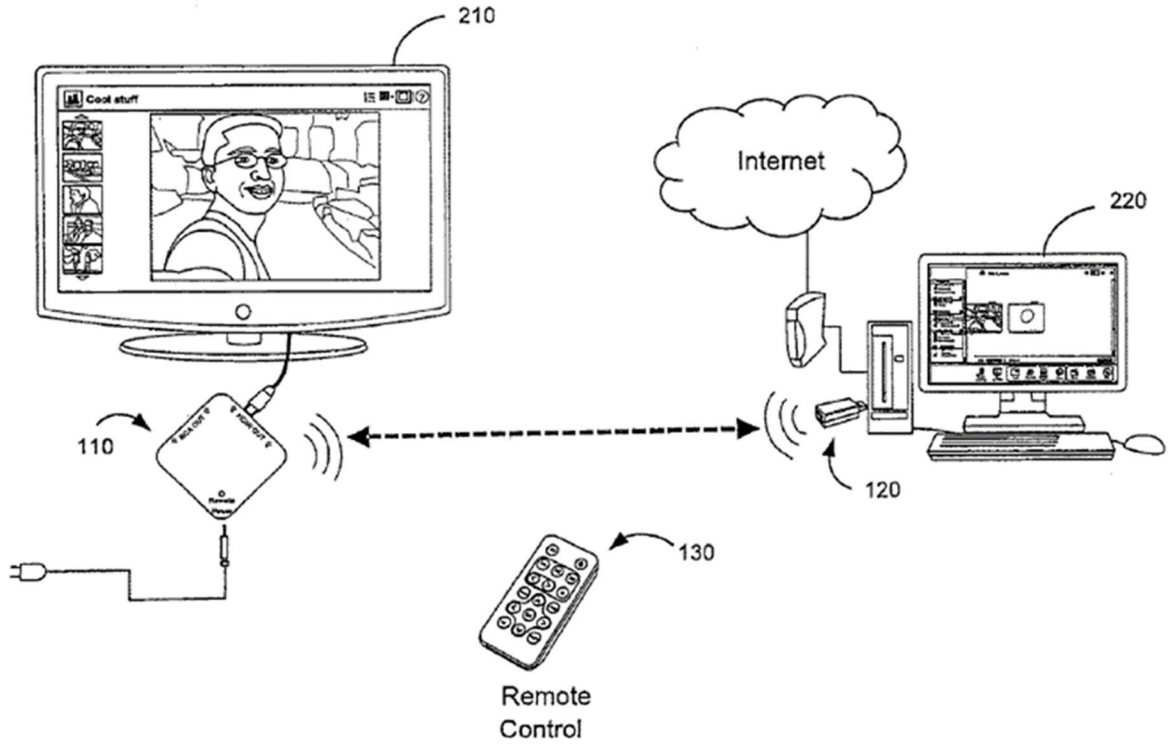

Ex-1008, FIG. 1

51. Around the same time, several commercial products were available that employed similar USB dongles for wireless communication between a personal computer and a projector or other display. One example was sold by Imation from at least during 2008 Ex-1026 (Imation), p. 8. The Imation system included a USB transmitter dongle that plugged into a personal computer and allowed communication with a base unit that was connected to a projector or monitor. *See* image below reproduced from Ex-1026 (Imation), p. 2. Imation's system adaptable for use at a conference or meeting with multiple wireless adapters able to communicate with the same projector/monitor Ex-1026(Imation), p. 6 "Associate a New Dongle to the WPL Base Unit."

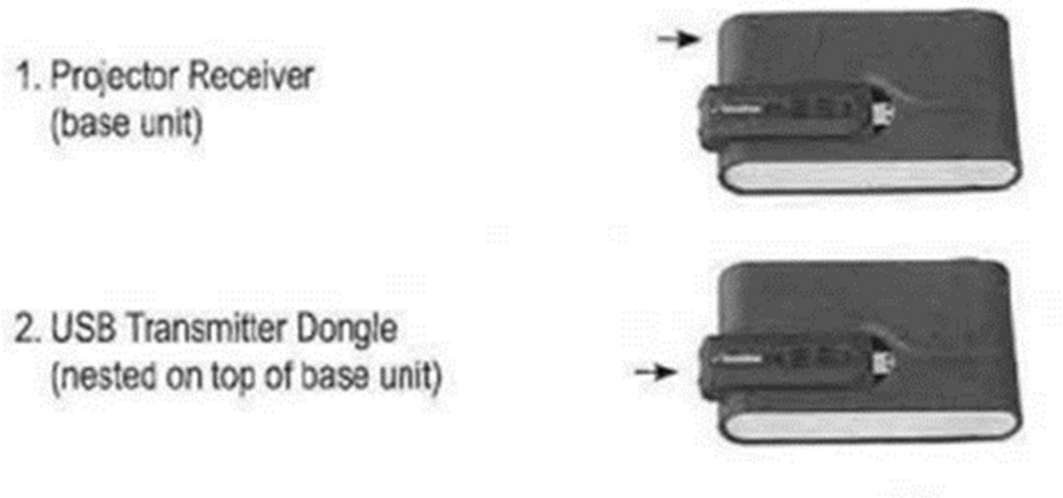

Ex-1026, p. 6 (excerpted)

52. The Imation system had a simple startup that only required attaching the base unit to the projector/display and to power and inserting the USB transmitter dongle into the personal computer. After only about 20 seconds, a start screen appeared that allowed transferring an image from the computer to be displayed on the projector/monitor. *See* image reproduced below from Ex-1026 (Imation), p. 2 "Simple Start UP (PC)." Although an optional special driver was available, this driver was not necessary for operation Ex-1026(Imation), "Installing DisplayLink™ Driver (PC)."

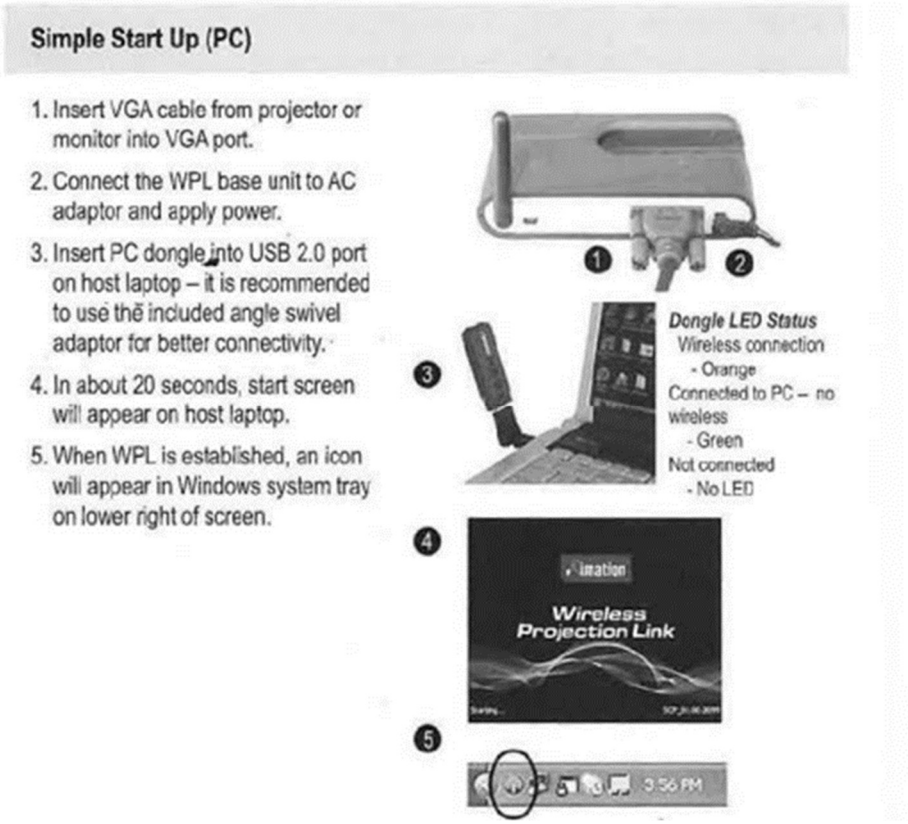

Ex-1026, p. 2 (excerpted)

53. As example of another system employing this technology at the time of invention, another wireless adapter system was sold under the EZAir brand from around 2010. Ex-1027 (EZAir), p. 1. According to promotional materials for the EZAir, "[t]he products operate via a Plug&Play USB dongle that plugs into a USB port available in any PC/Laptop and an adapter that connects to the target device (such as flat TV, speaker system or PC peripherals)." Ex-1027 (EZAir), p. 2. The adapter was also marketed for use in small business and education where multiple participants commonly need to interact with the same projector/display Ex-1027 (EZAir), p 2. An image from the EZAir marketing material (Ex-1027 (EZAir))

illustrates the Plug&Play USB dongle transmitting image and audio data wirelessly to the adapter connected to a television. The image of an undersea scene from the laptop connected to the dongle is reproduced on the television.

Ex-1027, p. 1 (excerpted)

54. Wireless adapters with a similar form factor were also sold under the Warpia (Ex-1028 (Warpia) and Q-Waves (Ex-1029 (Q-Waves)) brands. According to marketing materials from 2009, the Warpia system allowed wireless connectivity from a notebook or PC to displays, such as projectors, TVs, and monitors Ex-1028 (Warpia), p. 1, "Key Features," "Overview." The Warpia system included pre-associated (*i.e.*, pre-paired) adapters that provided audio and video communication to the display Ex-1028 (Warpia), p. 1, "Key Features." The system was easy and quick to set up. Ex-1028 (Warpia), p. 1, "Key Features." An image from the Warpia marketing material (Ex-1028 (Warpia)) is shown below, illustrating image transfer

from a PC Adapter connected to a laptop computer to A/V Adapters connected to a projector and a television. The PC Adapter was able to connect to a USB port, which were common to all notebooks & PCs at the time, and the A/V Adapter connected to an HDMI port or VGA port of a display device. Ex-1028 (Warpia), p.1 "Overview."

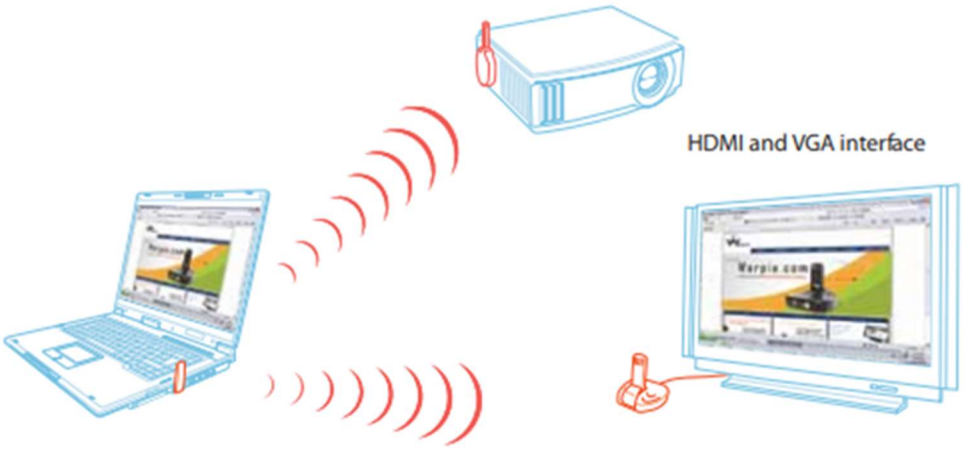

Ex-1028, p. 1 (excerpted)

55. As yet another system implementing a wireless adapter, IOGEAR sold another wireless media communication kit from at least 2008. Ex-1030 (IOGEAR), p.44 (copyright date). The kit included a wireless USB host adapter that plugged into a computer from which media was transmitted wirelessly to a wireless VGA adapter connected to a projector or other display. *See* images below reproduced from Ex-1030 (IOGEAR), pp.13,16.

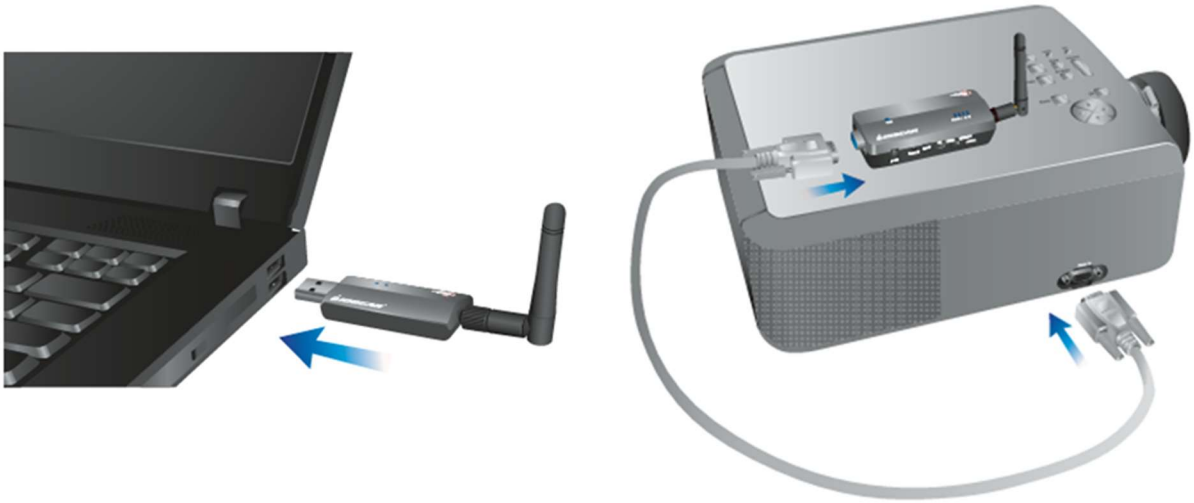

Ex-1030, pp.13 (left – wireless host adapter), 16 (right – wireless VGA adapter) (excerpted)

56. The IOGEAR product anticipated that the host computer operating system would have included pre-installed USB drivers that allowed the USB host adapter to be set up automatically. For instance, IOGEAR indicated that one can "[p]lug the Wireless USB Host Adapter to your computer via option 1 or 2. Windows will detect the device and complete the driver installation process automatically." Ex-1030 (IOGEAR), p. 13. The wireless USB host adapter and wireless VGA adapter were pre-associated (or pre-paired) to improve ease of use, such that no network configuration needs to be entered by a user. Ex-1030 (IOGEAR), p. 40. The IOGEAR kit was also adaptable for use by multiple participants in a meeting. For example, additional wireless USB host adapters could be paired with the same wireless VGA adapter. Ex-1030, p. 28. A "HOST" button on the wireless VGA

adapter could then be used to switch between which wireless USB host adapter was transferring data to the VGA adapter for display. *See* Ex-1030 (IOGEAR), p. 28, "Wireless USB Host Adapter Selection" reproduced below.

Wireless USB Host Adapter Selection

To use this button, you must purchase at least one additional Wireless USB Host Adapter (GUWA200). The additional Wireless USB Host Adapters not included in this kit will have to go through the association process before they can be used with the Wireless VGA Adapter. For more information about the association process, please refer to Appendix - Cable association with other devices .

The "HOST" button on the Wireless VGA Adapter is used to switch between Wireless USB Host Adapters. By pressing this button, the Wireless VGA Adapter will look for the next associated Wireless USB Host Adapter in its list and connect to it. The 1-2-3 lights will move to the next position. If multiple Wireless USB Host Adapters have been associated with the Wireless VGA Adapter, you may have to press the button multiple times before a connection is made with the desired Wireless USB Host Adapter. Up to 16 Wireless USB Host Adapters can be associated with your Wireless VGA Adapter.

Ex-1030, p. 28 (excerpted)

57. As the technology in this space evolved and bandwidth issues were resolved, applications for hosting group communications, or unified communication calls, were developed. For example, by at least 2012, the Skype™ platform widely became available for business or general purpose users. *See* Ex-1009. Ex-1009 demonstrates Skype was available at least as early as September 14, 2012—well before the alleged invention. This software application allowed the users to have "video calling" between members of the call, wherein audio/video captured by the user device's camera function was shared/streamed to a user on a separate user device, and vice versa, which could be shared from a peripheral device to a functional device as described Beel, Kaplan, and other prior art.

58. At least as early as 2015, Skype expanded their technology, largely using technology the ’972 patent allegedly discloses as novel. *See* Ex-1013. By November 28, 2015, approximately two years before the earliest priority date of the ’972 patent, Skype included the ability for users to host a unified communication call, or “[g]roup video calls” with multiple users. These calls, as before, allowed the user’s device to capture audio/visual images with the device’s camera function and share/stream the audio/visual images to other user devices that were connected to the call. Further, Skype expanded their technology to also allow “[s]creen sharing,” by which a user, similar to the camera function, could capture the data/image of the user device’s screen, and share/stream that data/image to other user devices connected to the call.

59. It is apparent from the example prior art patent and product literature discussed above that content sharing techniques were well-established by the time of the invention. It is further apparent that applications and systems for hosting unified communication between user processing devices was well-established and widely used through the industry at the time of the alleged invention. I have discussed several examples of techniques to transfer image data from a computer to a display routed through a wireless USB dongle or similar set of devices, so that data from the computer display can be presented on another display. The USB technology

of these various products utilized standardized USB drivers and communication protocols available to allow a plug-and-play experience. *See*, *e.g.*, Ex-1026 (Imation), p. 2 "Simple Start Up (PC)." I have also discussed examples of unified communication applications and how these applications were used to host audio/visual communications between groups of users.

VI. OVERVIEW OF THE '972 PATENT

A. Prior Art Techniques Acknowledged by the '972 patent

60. The '972 patent is directed to tools for making functional devices available to participants of meetings. Ex-1001, 1:5-8. In this vein, the '972 patent recognizes a recent "explosion of electronic communication tools" allowing ad hoc communication, such as "synchronous and asynchronous conferencing, online chat, Instant Messaging, audio conferencing, videoconferencing, data conferencing, application sharing, remote desktop sharing, electronic meeting systems, collaborative management (coordination) tools, project management systems, knowledge management systems, and social software systems." Ex-1001, 1:12-23.

61. The '972 patent acknowledges that web conferencing tools, such as those used for hosting a unified communication (*e.g.*, a Skype call), "can take over audio and/or visual data provided from a host processing device." Ex-1001, 6:59-63. Skype is referenced repeatedly in the '972 patent and has been known since at least 2012. *See*, *e.g.*, Ex-1001, 2:28-31, 6:59-7:13, 11:64-12:5, 13:45-63, 15:19-22,

17:57-18:3, 19:55-61, 22:9-11, 22:28-31, 22:38-44; Ex-1009; Ex-1013. The '972 patent also acknowledges that Beel (Ex-1005) shows an arrangement of components (FIG. 11 of Beel) that can be used in embodiments (FIG. 4) of the purported invention of the '972 patent. *See* Ex-1001, 4:28-33 incorporating WO 2013/037980 entitled 'Electronic tools and methods with audio for meetings' by reference. Referring to components of FIG. 4 that also appear in FIG. 11 of Beel, the '972 patent also acknowledges "These are fixed and are a combination of vendor specific endpoints and a number of standard endpoints and can be interpreted or understood as a custom Driver, a default OS driver and/or a host application as has been described with reference to FIG. 4 do screen sharing and audio." Ex-1001, 16:51-56.

B. The Purported Invention

62. The '972 patent purports to solve problems associated with "a need for high quality audio as well as visual signals to be made available to participants at a meeting." Ex-1001, 1:39-42. Yet, the claims of the '972 patent are simply directed to connecting devices in a communications network and using a device to host a unified communication, such as a Skype call—much like the acknowledged prior art discussed in the previous subsection and further below. *See*, *e.g.*, *id.*, 1:12-23, 4:28-33. Although presented as disclosing a new approach, the '972 patent fails to explain

any concrete distinction from these prior art methods. As I discuss above and in further detail below, all features recited in the challenged claims were already known.

C. Prosecution History

63. I have reviewed the prosecution history of the '972 patent and noted that the claims were initially rejected based on two anticipation grounds, Brands (U.S. Publication No. 2015/0121466) and Leete, III (U.S. Publication No. 2014/0362161). *See* Ex-1004, 174-83. In response, the Patent Owner amended claim 1 as follows:

> the base unit having a transmitter and the first peripheral device having a receiver and at least one fixed or a configurable endpoint, <u>where the at least one fixed or a configurable endpoint is a data source or a data sink which is able to store data</u>, of the functional device exposed <u>or made available</u> on the first peripheral device.

Ex-1004, at 309 (underlining in original)

64. The Patent Owner also argued that, "the exposed endpoints for functional devices allow these devices to be controlled by the peripheral device and to appear as if they were local to the processing device," and that the prior art, instead, allowed the functional devices to "be linked to the network and linked by a network to the router or the base node." Ex-1004, 316.

65. I note that the '972 patent was subject to a first Final Rejection, which was based on a third anticipation ground over Christison (U.S. Patent No. 7,761,627, Ex-1011). *See* Ex-1004, 329-36. In response, the Patent Owner amended the claims to additionally recite, "wherein the processing device is adapted to host a unified communication between two or more processing devices." which the Examiner considered allowable subject matter. Ex-1004, at 363 (underlining in original). Finding this limitation as allowable subject matter, the Examiner issued a Notice of Allowance, and the '972 patent subsequently issued. Ex-1004, at 335, 368, 401.

66. Yet as I discussed above and in further detail below, a processing device being adapted to host a unified communication between two or more processing devices was a well-known and widely used technology in the art and described for use in similar contexts.

VII. CLAIM CONSTRUCTION

67. I understand that claim terms are typically given their ordinary and customary meanings, as would have been understood by a POSA at the time of the alleged invention, which, as I explained above, I have been asked to assume is around December 29, 2017.

68. In considering the meaning of the claims, however, I understand that one must consider the language of the claims, the specification, and the prosecution

history of record. In general, I have been asked to consider the claim terms under their plain and ordinary meanings and thus considered the claims, specification, and prosecution history for the ’972 patent in doing so in support of my opinions concerning the ’972 patent and the prior art discussed herein.

69. I have been told that the ’972 patent is related to European Patent No. 3,732,827 B1 (the “’827 patent”). I have also been told that the ’827 patent is involved in Unified Patent Court proceeding UPC_CFI_582/2024. I understand that the laws and regulations concerning patentability, including novelty, obviousness, and claim construction, in Unified Patent Court proceedings are different than the laws and regulations of the United States. I further understand that the ’972 patent and the ’827 patent contain different specification disclosures, prosecution histories, and claim limitations. Therefore, while I have considered the ’827 patent in my analysis herein, my opinions may not necessarily reach the same conclusion as, and are not intended to apply to, any other proceedings.

70. However, I have also been asked to consider the following descriptions for the terms below. Where the terms appear in the claims, I have read the terms in light of their corresponding descriptions from the ’972 patent in so far it was necessary to apply them to the prior art. I have accounted for these descriptions in

forming my opinions whether or not I have specifically addressed those descriptions in further detail in the following sections.

71. However, in my view, my analyses below remain valid as long as any reasonable construction is applied to the terms below. Further, to the extent the Patent Owner or the Patent Trail and Appeal Board asserts and/or adopts any other proposed construction for the terms below, I reserve the right to address any such construction.

72. I understand some of the terms below presumably invoke 35 U.S.C. § 112(f) ("§ 112(f)"), *i.e.*, is a "means-plus-function" limitation, because each "means" limitation does not recite sufficient structure for performing the recited function.[3] *Williamson v. Citrix Online, LLC*, 792 F.3d 1339, 1349 (Fed. Cir. 2015).

---

[3] I understand Petitioner may intend to argue in the future that the limitation is indefinite because the '972 patent specification describes insufficient corresponding structure for the full scope of the function recited for the claimed "means" terms. Recognizing that the Board cannot address indefiniteness in an IPR proceeding, Petitioner satisfies its burden by advancing a means-plus-function construction in the IPR based on the limited corresponding structure described in the '972 patent. *See DraftKings Inc. v. AG 18, LLC*, IPR2022-01447, Paper 12 at 25 (PTAB Mar. 14,

Per 37 C.F.R. § 42.104(b)(3), I understand the Petitioner is obligated to identify the "specific portions of the specification that describe the structure, material, or acts corresponding to each claimed function" for any limitations that invoke § 112(f). *See* Consolidated Trial Practice Guide ("CTPG"), 45 ("Where claim language may be construed according to 35 U.S.C. § 112(f), a petitioner must provide a construction[.]"). I also understand that Patent Owner may contend this limitation does not invoke § 112(f).

73. As set forth below, whether construed as a means-plus function limitation or not, the limitations requiring "means for", or similar language invoking means plus, captures at least the expressly described structure associated with the claimed function and equivalents. But even if these limitations were found to not evoke § 112(f), the claimed "means" must be construed broadly enough to capture the specifically disclosed examples and equivalents. Thus, my understanding of the terms, as described in the specification, and the analysis herein also applies to any term regardless of the analysis under § 112(f).

2023) (instituting review and accepting as procedurally proper a § 112(f) construction advanced in an IPR where the petitioner argued in the parallel litigation that the claim was indefinite for failing to disclose sufficient corresponding structure).

A. "*functional device*" (Claims 1-3, 5-11, 13-16)

74. The '972 patent explicitly defines a "*functional device*" as "a second peripheral device connected in some way to a base unit." Ex-1001, 7:58-59. Therefore, I consider this definition in my analysis.

B. "generic communications protocol" (Claims 1, 9, 15)

75. In my view, while the '972 patent does not provide a specific definition of "*generic communications protocol*," the '972 patent describes the use of a "*generic communications protocol*" in enabling communication between the processing device and the first peripheral device. For example, I note that the '972 patent explains that a "video signal" is transported "over the plug and play interface using a generic driver, such as over a USB interface using generic pre-installed drivers." Ex-1001, 15:47-51. In this context, the plug and play interface, depicted in Figs. 1B and 1C as arrow 53, facilitates communication between the first peripheral device 130 and the processing device 160.

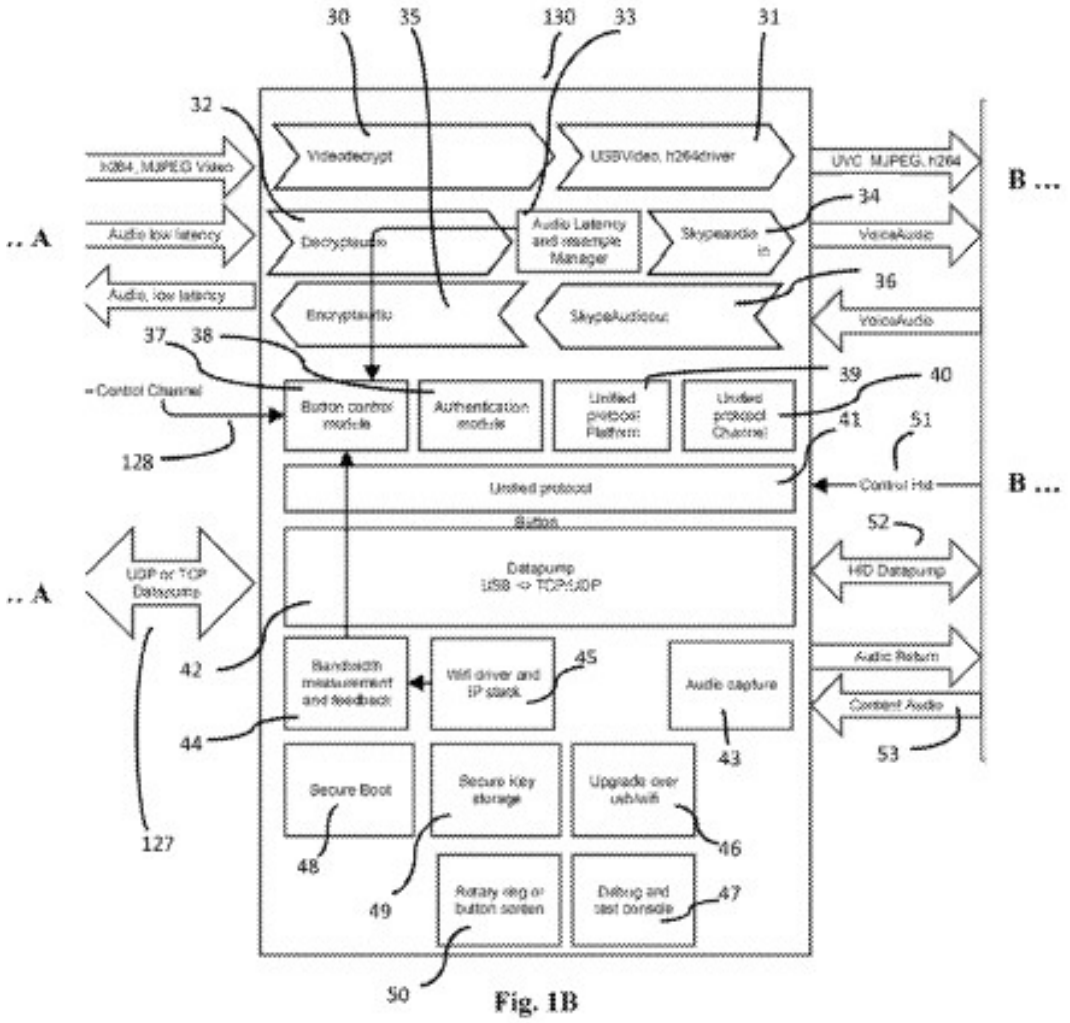

Fig. 1B

Ex-1001, Fig. 1B

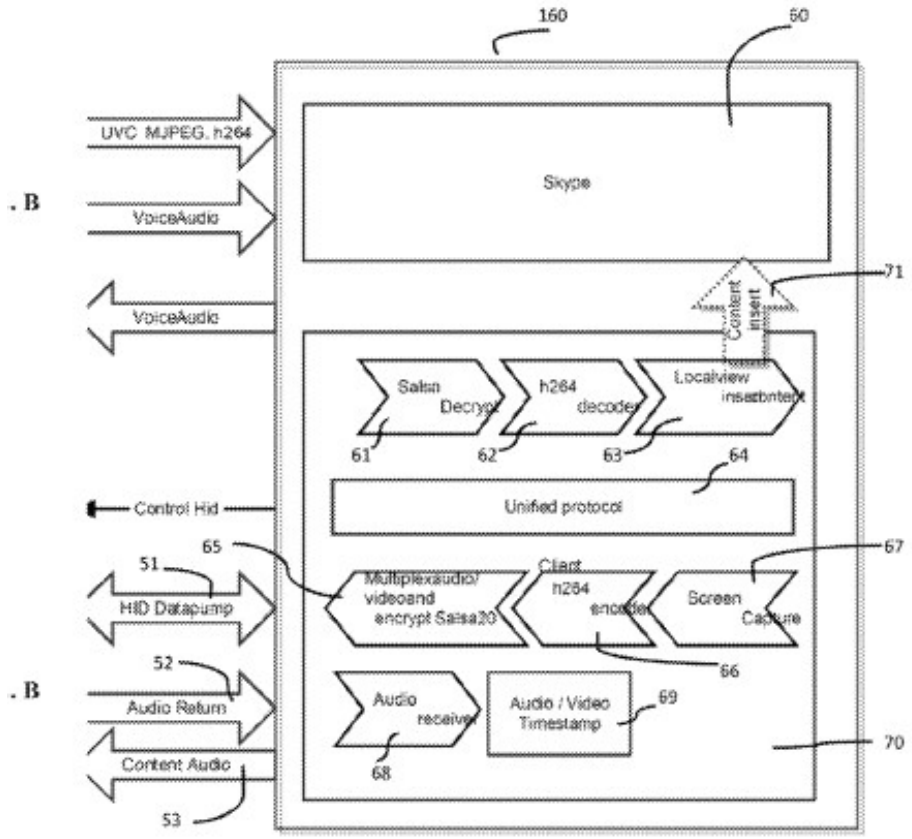

Fig. 1C

Ex-1001, Fig. 1C

76. I further note that a protocol is a set of rules used by two modules or devices to communicate. Ex-1031. Therefore, I understand the "*generic communications protocol*" as the protocol used by the pre-installed generic drivers to interface/communicate between the first peripheral device and the processing device.

C. *"coupled ... / "coupling ... via a generic communications protocol"* (Claims 1, 9, 15)

77. I note that the '972 patent does not explicitly define the term "couple." However, the claims require coupling the "*first peripheral device*" to the "*processing device via a generic communications protocol*." Ex-1001, claim 1. *See* § VII.B for construction of "*generic communications protocol*." Thus, I understand this limitation to mean "connected through electronic communication"

D. *"unified communication"* (Claims 1, 5, 9, 13, 15)

78. I note that the '972 patent defines the "Unified Communications systems or tools" as "audio or audio visual communications such as provided by 'Skype™' or 'Skype™ for Business'." Ex-1001, 6:59-63. The '972 patent further explains that such software "can take over audio and/or visual data provided from a host processing device." Ex-1001, 6:61-63. Additionally, the '972 patent states that "processing devices ... shar[e] the Unified Communication (UC) call such as the Skype call or a Skype for Business call." Ex-1001, 17:67-18:3. Thus, I understand "unified communication" as "audio or audio visual communication."

E. "*means for encoding, optionally encrypting*" (Claims 4, 12)

79. The term "*means for encoding, optionally encrypting*" presumably invokes means-plus-function language and refers to the software for encoding or

encrypting data. I understand the function to be encoding or encrypting data. The "means for encoding, optionally encrypting appears verbatim in the specification:

> The system can comprise means for encoding, optionally encrypting the data.

Ex-1001, 2:26-27.

F. *"at least one fixed or a configurable endpoint, where the at least one fixed or a configurable endpoint is a data source or a data sink which is able to store or emit data, of the functional device exposed or made available on the first peripheral device"* (Claims 1, 3, 9, 11, 15, 16, 18)

80. The '972 patent states that:

> "Endpoints" can be described as data sources or sinks and are defined for USB Devices which <u>can be physical devices or virtual devices</u>. In the present invention <u>endpoints should be interpreted broadly as data sources or sinks</u>. Hence <u>data can be stored at an endpoint or emitted</u>. An <u>endpoint can act as a kind of buffer can be [sic] defined for physical devices or virtual devices.</u>

Ex-1001, 7:64-8:3.

81. The quote above further explains that these endpoints can be associated with either physical devices or virtual devices and are described as acting as buffers to store or emit data during communication. *Id*. I understand a buffer as a temporary storage for digital data that is moving from one place to another, such as data received in a video buffer before being decoded for presentation on a display.

82. I further note that the language of the claims does not explicitly specify whether the endpoint is part of the "*peripheral device*" or "*functional device*." In my view, the claim can be interpreted in two ways, *i.e.*, "*first peripheral device having … at least one … endpoint*" or "*at least one … endpoint … of the functional device*." The '972 patent also explains that endpoints are a standard part of the USB specification. Ex-1001, 7:41-55, 16:51-17:5. This is also my understanding of the USB specification. FIG. 17 of the '972 patent shows "*the first peripheral device having … at least one fixed or a configurable endpoint*." For example, peripheral device 130 has endpoints 132, 134, 136:

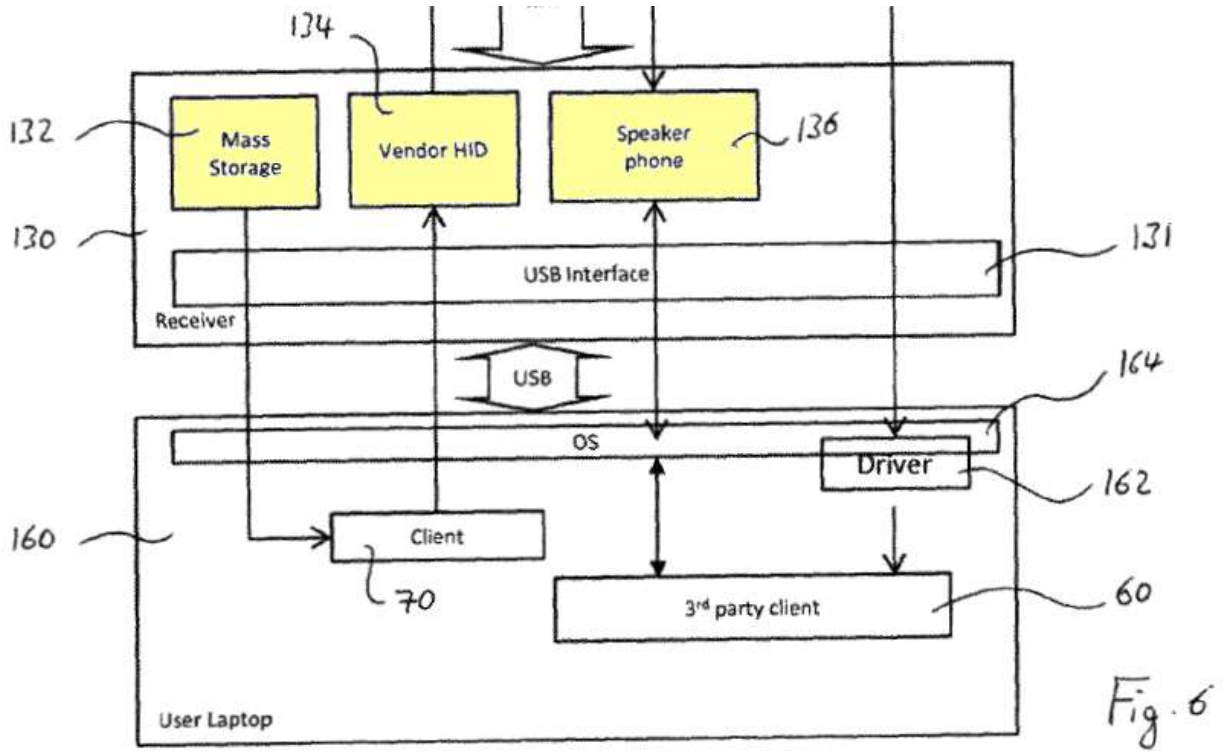

Ex-1001, FIG. 6

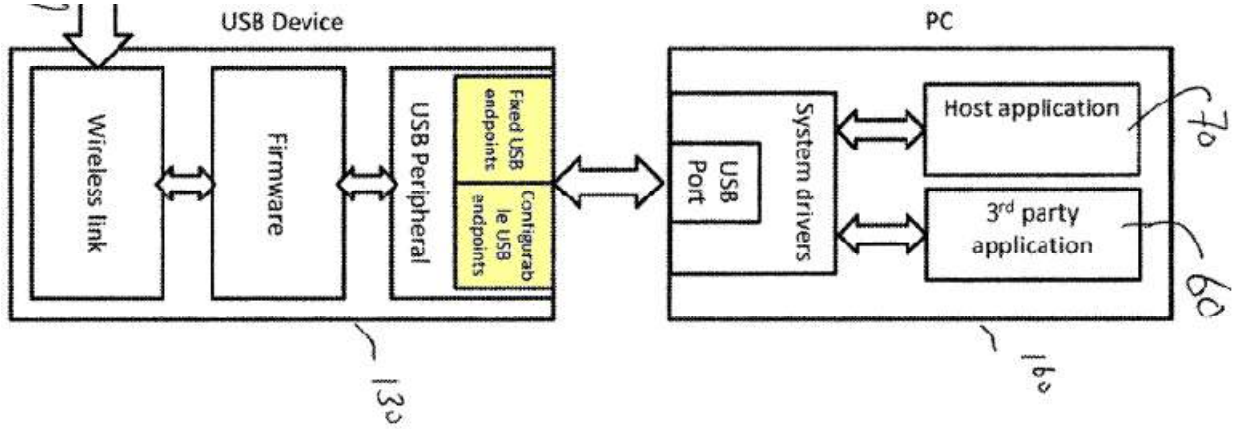

Id., FIG. 17

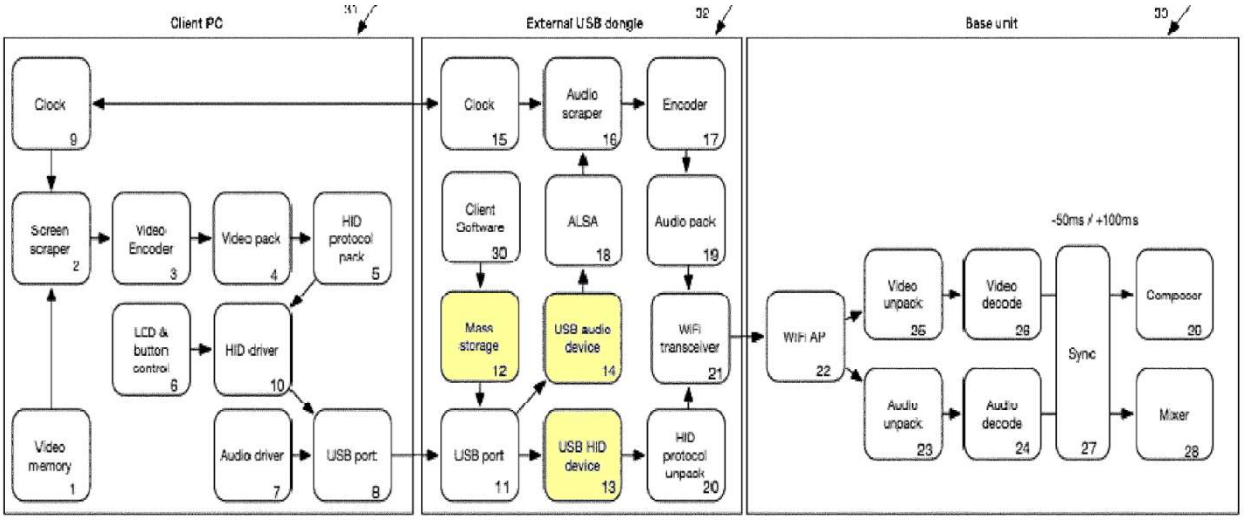

Id., FIG. 4.

83. The '972 patent also describes USB endpoints "*of the functional device*." Such endpoints include, for example, an "endpoint from the at least one functional device 91-93 (*e.g*. the webcam 91 that was attached to the Base Unit 100) and/or the speakerphone endpoints (both speakerphone microphone and speakerphone speakers)." Ex-1001, 13:51-55; *see also*, *id*. FIG. 1A, reproduced below.

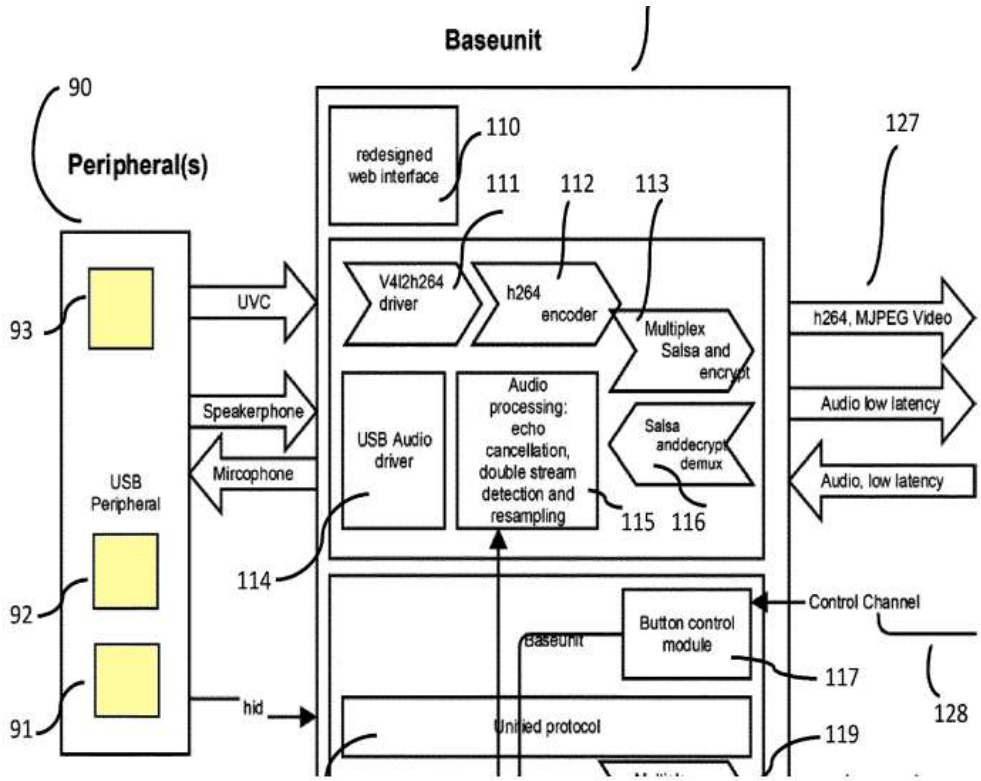

Ex-1001, FIG. 1A

84. Therefore, in my view the ’972 patent discloses that USB peripherals are connected to both the processing device (*i.e.*, user computer) and the base unit. According to the USB specification, USB devices must include an “endpoint,” which serves as a data source or sink. These endpoints, at either end of the USB communication connection, facilitate communication within the system. This occurs by passing data from one endpoint (*i.e.*, the source), and optionally through a number of endpoints along the path, to another endpoint (*i.e.*, the sink).

85. The ’972 patent does not clearly define the distinction between “*fixed*” and “*configurable*” endpoints, and these terms are not commonly understood in the art. However, the ’972 patent explains that,

> [F]ixed USB endpoints … are provided for the basic functionality, [and] configurable USB endpoints are configured either when pairing a first peripheral device 130 device with a base unit 100 or over the wireless connection 127 between the processing device 130 and the base unit 100.

Ex-1001, 16:49-60.

86. In my view, the context of the terms suggests that the “*endpoint*” is either “*configurable*” or it’s not, *i.e.*, it’s “*fixed*.” To the extent the meaning of this term is reasonably certain, I note that a device must fall into one of these two categories (*i.e.*, if its not configurable, then it must be fixed), ensuring that this limitation encompasses both scenarios and does not impose additional restrictions on the claim. Alternatively, I note that a fixed endpoint could refer to a mass storage device, while a configurable endpoint might refer to an HID or audio device capable of pairing with a base unit.

87. This limitation also requires that the “*endpoint*” “*is able to store or emit data, of the functional device.*” This functionality is a feature of USB endpoints. It is my understanding that endpoints function as buffers, and buffers, by definition, temporarily store and emit data during communication.

88. This limitation also recites, "*the functional device exposed or made available on the first peripheral device*." The following sections of the '972 patent are relevant to this term:

> The system has the ability to expose second peripheral devices connected to the Base Unit to the first peripheral device transparently as if it were attached to the processing device to which the first peripheral device is connected.

Ex-1001, 7:59-63.

> "A specific device exposes a peripheral device or other device" means that the specific device configures one or more endpoints with specific descriptor fields.

Id., 8:59-61.

89. I note that "*expose*" is not a term of art, and the claim also includes "*made available*" as an alternative expression. The specification clarifies that "*exposed*" or "*made available*" refers to transferring data, such as audio or visual data, between the peripheral device and the functional device. *See*, *e.g*., Ex-1001, 17:16-18:39.

90. I note that the '827 patent requires the configuration of descriptor fields as related to this term. However, it is my view that the '972 patent explicitly uses "*expose*" to describe a broader range of implementations, including those that do not involve configuring descriptor fields. For instance, the '972 patent describes

scenarios where functionality is exposed through proprietary software, without requiring any modification of descriptor fields. Ex-1001, 10:7-67. Moreover, the ’972 patent claims do not require this limitation, as does the ’827 patent claims do.

91. Therefore, it is my view that this limitation means, “a data source or sink that is fixed or configurable and used to transfer data between the peripheral device and the functional device.”

VIII. OVERVIEW OF THE PRIOR ART

A. Beel (Ex-1005)

92. Beel was published as U.S. Pre-Grant Publication No. 2015/0169477 on June 18, 2015, qualifies as prior art under § 102(a)(1). Ex-1005, abstract. Although Beel was not substantively considered during the prosecution of the ’972 patent, the record acknowledges that a related publication “shows an arrangement of components that can be used in embodiments of the present invention.” Ex-1001, 4:28-33; FIG. 4. Beel, which is assigned to Barco NV, features a different inventive entity and was published more than a year before the ’972 patent’s priority date.

93. Like the ’972 patent, Beel discloses systems and methods for wirelessly transmitting media content between an electronic device, or multiple devices, and one or more display devices, specifically, by using peripheral devices connected to the electronic devices and a base node which is connected to the display device. Ex-1005, ¶¶23, 40, 48. Beel uses nearly identical language to describe its systems and

methods to that of the ’972 patent, indicating significant overlap in the disclosed subject matter.

B. Dinka (Ex-1006)

94. Dinka, issued as U.S. Patent No. 8,369,498 on February 2, 2013, constitutes prior art under § 102(a)(1). Ex-1006, abstract. This reference was not substantively considered during the prosecution of the ’972 patent.

95. Dinka is assigned to Skype and discloses methods and systems for facilitating communication between multiple computer terminals and televisions. Ex-1006, abstract, 1:12-15. For example, Dinka describes a communication client application on a local user device, which allows the local user to participate in “communication sessions with other remote users via the network.” Ex-1006, 2:44-55. Dinka discloses the use of bidirectional transmission of audio and visual data, which is encoded, decoded, and (de)multiplexed in both directions. Ex-1006, abstract, 8:7-51, 9:32-50, 13:1-24, 15:24-32.

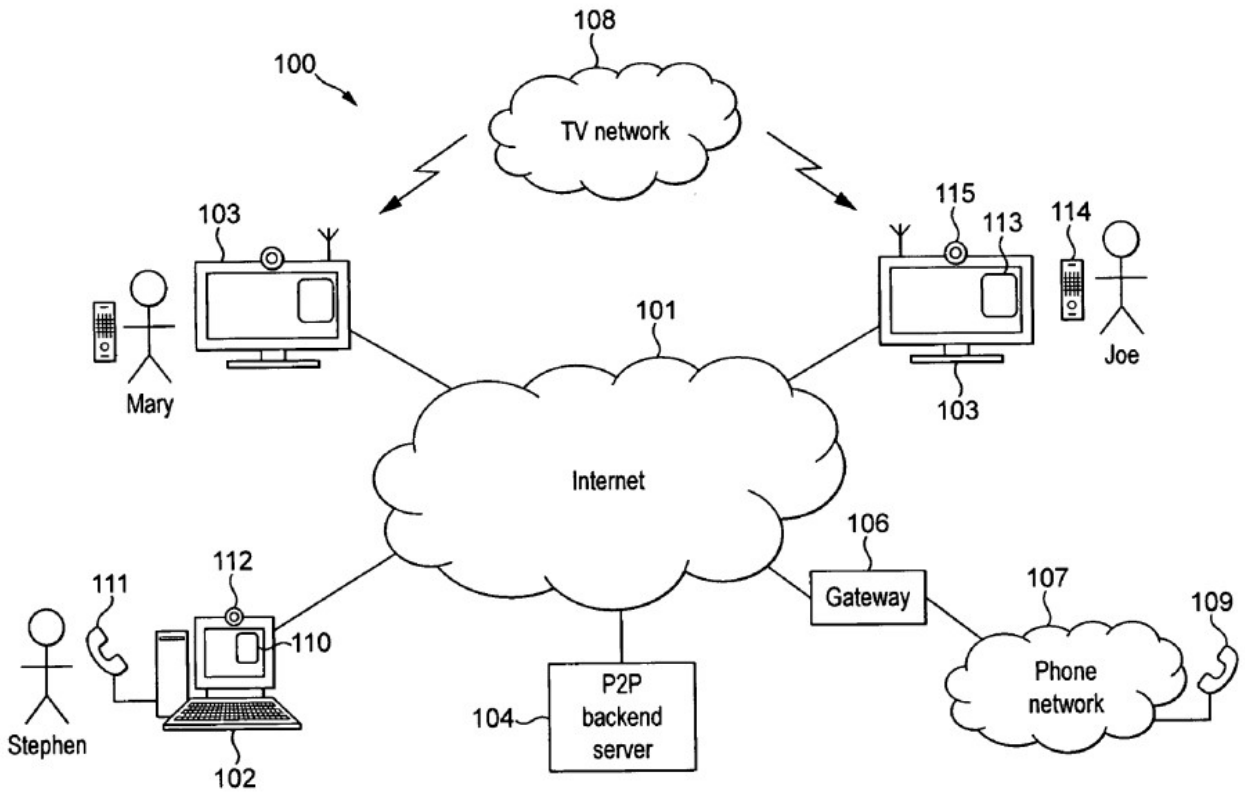

FIG. 1

Ex-1006, FIG. 1.

C. Kaplan (Ex-1008)

96. Kaplan was published November 25, 2010, as U.S. Patent Application Publication No. 2010/0295994. Kaplan is prior art under 35 U.S.C. § 102(a)(1).Kaplan was not considered during prosecution of the ’972 patent.

97. Like the ’972 patent, Kaplan discloses methods for transmitting video content between a computing device and a display device. Ex-1008, abstract. In particular, Kaplan addresses the challenge of simplifying the wireless connection setup process for users, recognizing that traditional network configurations were

often "difficult and frustrating" for many. Ex-1008, ¶3. Kaplan further highlights that the complexity of such setups contributes to the high return rate of wireless networking equipment. *See id.*

98. To address these issues, Kaplan proposes a communications system 100 where a computer 220 is wirelessly connected to a display device 210 via a USB transmitter 120. Ex-1008, ¶¶16-18 and FIG. 2, reproduced below. The transmitter 120 and receiver 110 are pre-paired, with the receiver 110 which is connected to the display device 210. This pre-pairing eliminates the need for users to perform any wireless configuration. Ex-1008, ¶18. Kaplan's system allows the user to select a video for playback, transmitting the selected video footage from the computer 220 through the transmitter 120 to the receiver 110, where it is displayed on the display device 210. Ex-1008, ¶28. Kaplan also specifies that data can be communicated in the alternate direction from the receiver 110 to the transmitter. Ex-1008, ¶39 ("It should be noted that communications both downstream (*i.e.*, transmitter to receiver) and upstream (*i.e.*, receiver to transmitter) are provided by embodiments of the present invention").

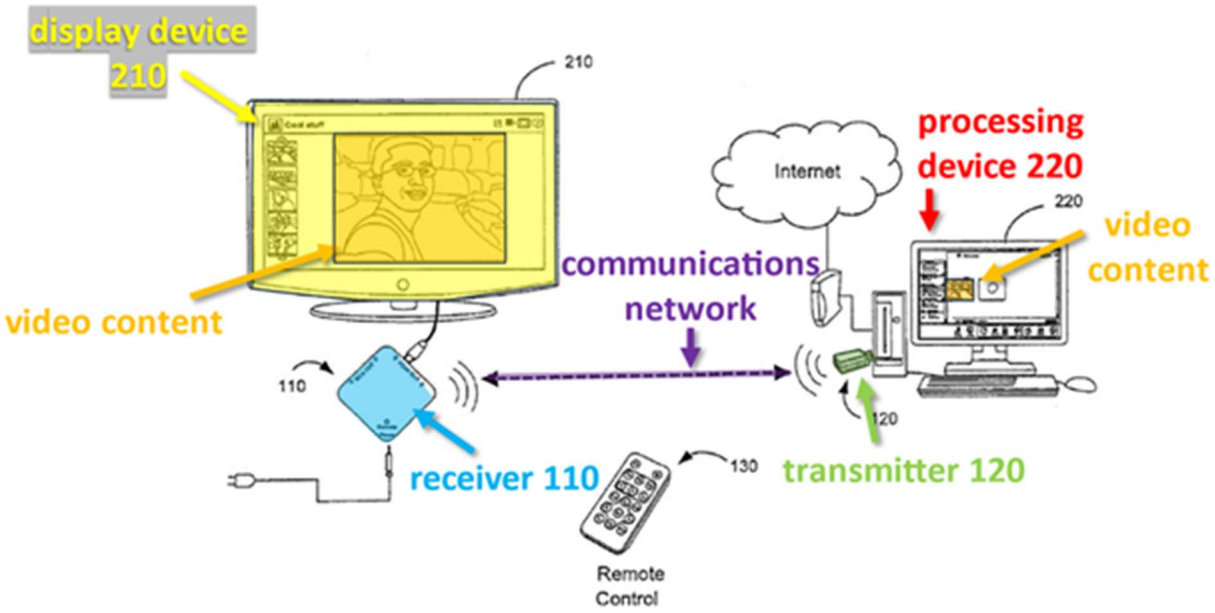

FIG. 2

Ex-1008, FIG. 2.

D. Van de Laar (Ex-1007)

99. Van de Laar, published as U.S. Pre-Grant Publication No. 2016/0014172 on June 18, 2015, qualifies as prior art under § 102(a)(1). Ex-1007, abstract. This reference was not substantively considered during the prosecution of the ’972 patent.

100. Like the ’972 patent, Van de Laar discloses a system for connecting mobile devices, referred to as “dockees,” such as laptops, to one or more peripherals to control those peripherals in performing their intended functions. Ex-1007, ¶¶55, 73-74, 80, 82.

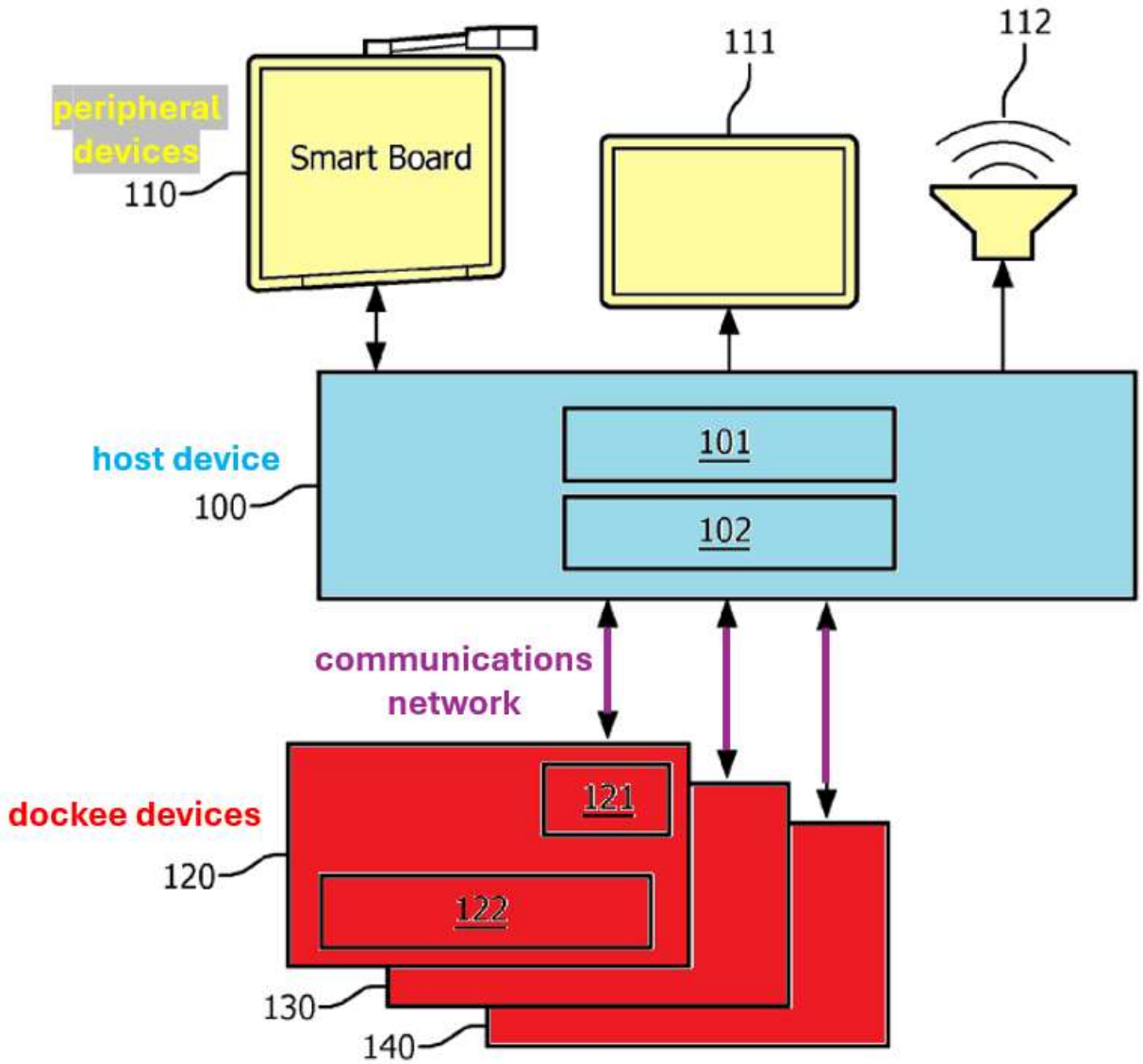

Ex-1007, FIG. 1.

101. The dockees communicate with a host device via a wireless communications network. Ex-1007, ¶¶74-76. Communication between the host device and the peripheral devices can occur through a wired connection, such as HDMI or USB. Ex-1007, ¶¶54, 110. Additionally, the system supports

communication between the dockee devices using a unified communication protocol, such as Skype. Ex-1007, ¶128.

E. Christison (Ex-1011)

102. Christison was published on July 20, 2010, as U.S. patent no. 7,761,627, and is prior art under § 102 (a)(1). It was considered on the record during prosecution. In my view, during prosecution of the '972 patent, Christison's teachings were overcome with the amendment that added the "unified communication" limitation (*i.e.*, "wherein the processing device is adapted to host a unified communication between two or more processing devices").

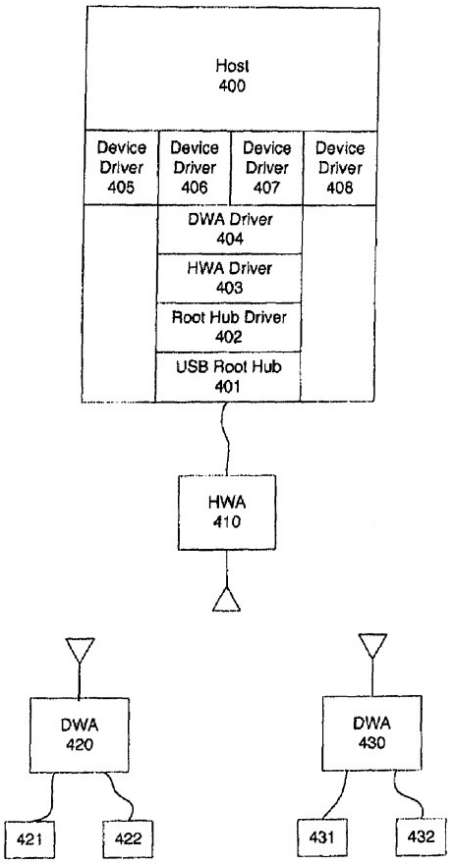

Ex-1012, FIG. 4

103. Like the ’972 patent, Christison discloses a Host Wire Adapter (HWA) 410 and Device Wire Adapters (DWA) 420/430 for mimicking wired USB devices (421, 422, 431, 432), allowing the USB devices to appear to a PC as wireless USB (WUSB) devices. Ex-1011, 3:59-4:16. This functionality is achieved by configuring USB device descriptor fields to align with the values compliant for WUSB devices. Ex-1011, 6:66-7:5, 9:36-38. By presenting wireless USB devices as “native devices,” Christison introduces throughput efficiencies over prior art systems. Ex-1011, 6:13-19.

F. Applicant-Admitted Prior Art (“AAPA”)

104. I note that the ’972 patent acknowledges that web conferencing or unified communication tools (*e.g.*, Skype) “can take over audio and/or visual data provided from a host processing device.” Ex-1001, 6:59-63. Skype is a well-known and widely accepted and adopted communication application, since at least 2012. Ex-1009. Further, Skype expanded its functionality to include many of the limitations presented by the claims of the ’972 patent prior to the alleged invention of the ’972 patent. *See* Ex-1013.

105. Additionally, the ’972 patent admits that Beel demonstrates an arrangement of components that may be utilized in embodiments of the present

invention. Specifically, the arrangement depicted in FIG. 11 of Beel is incorporated by reference. Ex-1001, 4:28-33.

106. Regarding Beel's FIG. 11 (which is copied as FIG. 4 in the '972 patent), the '972 patent further states, "These are fixed and are a combination of vendor-specific endpoints and a number of standard endpoints and can be interpreted or understood as a custom driver, a default OS driver, and/or a host application as has been described with reference to FIG. 4 to perform screen sharing and audio." Ex-1001, 16:51-56.

IX. THE PRIOR ART DISCLOSES AND/OR SUGGESTS THE RECITED FEATURES OF CLAIMS 1-18 OF THE '972 PATENT

A. Claims 1-18 of the '972 Patent Are Unpatentable as Obvious Over Beel in View of Dinka and Optionally in View of Christison

1. Rationale to Combine

107. Beel and Dinka both disclose systems for conducting online audio/visual conferences using various communication applications. Ex-1005, abstract, ¶¶85-89, 118, 253, 259; Ex-1006, FIG. 1, abstract, 2:44-3:5. Dinka, as a Skype patent, demonstrates Skype's capability to facilitate unified communication calls, as described by the '972 patent. Ex-1001, FIG. 1C, 6:59-63. Further, nearly two years before the '972 patent's disclosure, the Skype technology allowed for unified communication between groups of users in which a device's camera function

could be utilized to share/stream video data and, further, the ability to "screen share" contents from one user's screen to another user's screen. *See* Ex-1013.

108. Similarly, Beel discloses the use of comparable software for "electronic meeting systems," "groupware," and "web conferencing systems." Ex-1005, ¶¶85-89. Beel also includes embodiments where the software does not need to be "zero footprint" and can instead be installed directly on the processing device. Ex-1005, ¶¶215-248.

109. The '972 patent includes admissions regarding prior art (AAPA) that Skype is a known method for performing the web conferencing disclosed in Beel. Ex-1001, 6:59-63, 7:66-8:21. Skype's availability as early as 2012 further supports this understanding. Ex-1009; *see also* Ex-1013. Since Skype was a well-known and established technique for improving similar systems in the same manner, a POSA would have been motivated to combine the teachings of Beel and Dinka, resulting in the use of Skype or similar prior art unified communication call software with Beel's technique for connecting multiple users to a separate base node and functional device. The combination of these teachings would yield the predictable result of a web conferencing system employing software, such as Skype, for hosting unified communication calls while also utilizing one or more functional device's capabilities.

110. Christison discloses a method for wirelessly connecting functional devices to personal computers via a wireless peripheral device. Ex-1011, abstract. I note that a POSA would be familiar with and understand that connecting and presenting a remote functional device as a virtual device to a user computer was well known in the art. *See* § V (discussing Scragg and other wirelessly connected USB devices). Christison discloses one example of this technique, which emphasizes how its system provided advantages to the art, including of efficiency, by its method of presenting wireless USB devices as "native devices." Ex-1011, 6:13-19. Similarly, Beel teaches connecting remote virtual devices to a client computer. Ex-1005, ¶¶43, 50, 313, 314. A POSA would have recognized that Christison's method of presenting wireless USB devices as "native" devices provides an effective way to implement Beel's virtual devices.

111. In my view, the combination of Beel, Dinka, and Christison would have been obvious to a POSA. By incorporating Christison's known technique of presenting remote devices as native, the combination would improve or suggest one method for Beel to implement its disclosed virtual devices. The resulting system would create the predictable result of a wireless communication system capable of using USB protocols to present remote functional devices as local or "native"

functional devices to host a unified communication call, while utilizing one or more functional device's capabilities.

2. Claim 1

112. The teachings of Beel and Dinka, and optionally in view of Christison, disclose and/or suggest all the limitations of claim 1 as a whole.

a) A system for connecting a processing device to a functional device connected to or in a base unit of a communications network,

113. I have been asked to assume the preamble of claim 1 is limiting for the purposes of my analysis. If the preamble is not limiting, it would not affect my analysis for the limitations below.

114. In my view, the combination of Beel and Dinka discloses a system for connecting a processing device to a communications network, which includes functional devices connected to a base unit. For example, Beel claims "[a] system for connecting a processing device to a communications network." Ex-1005, claim 92. Further, Beel describes functional devices, such as microphones, cameras, and speakers, connected to a base node via a network (e.g., a cable network) to facilitate audio and video communication:

> Optional equipment can be cameras 39, 40, 41 for recording the progress of the meeting. These cameras can be linked by a network 51, e.g. a cable network to the router 42

> and/or the base node 36. Another optional item is a microphone or microphones 38 that can be used to transfer audio, e.g. to the processing devices 31 and to loud speakers (not shown) attached to the base node 36 or part of the display 44.

Ex-1005, ¶120 (emphasis added); *see also*, *id*. ¶¶41, 88, 310, FIGs. 1a, 1b.

115. The '972 patent discloses examples of "*functional device[s]*" to include cameras, microphones, speakers, and displays. *See* Ex-1001, claim 2. These components are explicitly disclosed in Beel's description of meeting systems. Ex-1005, ¶120, FIG. 1A, ¶310. A POSA would recognize that Beel provides a detailed implementation of this system.

b) the processing device having a memory, a display and an operating system,

116. In my view, the combination of Beel and Dinka discloses a processing device equipped with memory, a display, and an operating system. Ex-1005, ¶¶41, 56, 310, claims 82 and 92. These components are also features to modern communication systems and are integral to Beel's disclosure of its processing device architecture.

c) the system comprising: a first peripheral device being adapted to be coupled to the processing device via a generic communications protocol,

117. In my view, the combination of Beel and Dinka discloses this limitation. For example, Beel discloses a similar peripheral device, "a USB dongle,"

to the dongle disclosed in the ’972 patent. Ex-1005, ¶¶58, 195; Ex-1001, 7:56-57 and 9:10-22. The figures excerpted below demonstrate the similarity of each reference’s dongle:

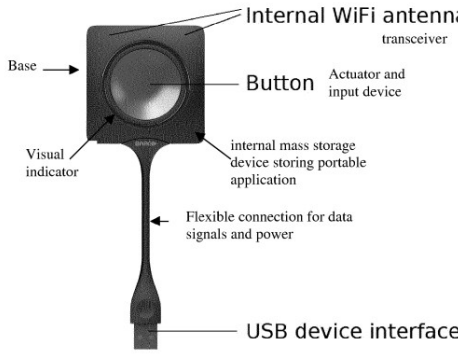

Ex-1005, FIG. 10

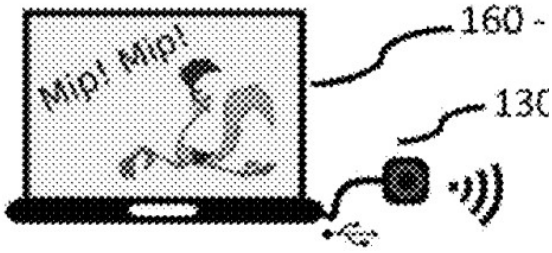

Ex-1001, FIG. 5 (peripheral device 130)

118. Beel also discloses that the peripheral device is “*adapted to be coupled to the processing device*.” For example, Beel states “peripheral device comprising a connector adapted to couple to a port of a user processing device 31.” Ex-1005, ¶125 (emphasis added).

119. This “coupl[ing]” is both a physical and electronically communicative coupling. This electronically communicative coupling is achieved “*via a generic communications protocol*.” Beel specifies that this connection is facilitated through “the processing device having … at least one pre-installed generic driver providing a generic communications protocol for communication between processing device and a standard class of peripheral devices.” Ex-1005, ¶56 (emphasis added). This setup ensures seamless interaction between the peripheral device and the processing

device without the need for device-specific drivers, as described in Beel. *See also*, *id*. ("setting up, by means of the pre-installed generic driver of the operating system, a means for communication between the peripheral device and the processing device").

120. A POSA would recognize that this disclosure demonstrates both the physical and electronically communicative coupling required for the claimed system, leveraging well-known techniques to facilitate communication between processing and peripheral devices using standard drivers and generic protocols.

d) the base unit having a transmitter and

121. In my view, the combination of Beel and Dinka discloses this limitation. For example, Beel discloses, "the base unit having a transmitter":

> The base node 36 for communicating with the connection unit 47 has a receiver 63 which can be included in the connection unit 49 or integrated into the base node 36. <u>The receiver is preferably a transceiver</u>. Optionally the transmitter/receiver can be a wireless <u>transmitter</u>/receiver.

Ex-1005, ¶129 (emphasis added).

e) the first peripheral device having a receiver and

122. In my view, the combination of Beel and Dinka discloses this limitation. For example, Beel discloses, "the first peripheral device having a receiver":

> The connection unit 47 for communicating with said base node 36 has a network interface e.g. comprising a transmitter 62. The transmitter 62 is preferably a transceiver. Optionally the transmitter/receiver can be a wireless transmitter/receiver.

Ex-1005, ¶128; *see also*, ¶¶120, 125 (emphasis added).

> **f) at least one fixed or a configurable endpoint, where the at least one fixed or a configurable endpoint is a data source or a data sink which is able to store or emit data, of the functional device exposed or made available on the first peripheral device;**

123. In my opinion, this claim is ambiguous because it is unclear whether it requires "the peripheral device having [an] endpoint" or an "endpoint of the functional device." However, I note in my view, the combination of Beel and Dinka discloses both scenarios.

124. First, Beel discloses "*the first peripheral device having … at least one fixed or a configurable endpoint*," including examples such as "Mass storage device 12," "USB audio device 14," and "USB HID device 13." Ex-1005, FIG. 11, ¶¶320-23. Further, I note that the '972 patent includes the identical figure (FIG. 4) disclosed in Beel (FIG. 11). The '972 patent describes the "peripheral device 130 as having "fixed USB endpoints…for basic functionality. Ex-1001, FIG. 4, 4:28-33, 16:44-67. This comports with my understanding of the USB specification. *See* § V (Background of the Technology).

125. Second, Beel also discloses an "*endpoint*" … *of the functional device*," which may include A/V components such as microphones, displays, or other "functional devices" connected to the base unit. These endpoints are described as either fixed or configurable to provide functionalities like audio output through a speaker or visual output on a screen. Ex-1005, ¶¶43, 50, 313-17; Ex-1001, 4:5-11, 16:44-67, 22:32-34. A POSA would recognize these endpoints as part of a system capable of supporting A/V communication. Further, I note that the USB specification discusses how USB devices utilize "endpoints" as part of the data transfer through connected USB devices. Therefore, for data to pass from a "functional device" to a "peripheral device," both the functional device and the peripheral device must have "endpoints" (*e.g.*, endpoint on the functional device as a "data source" and the endpoint on the peripheral device as a "data sink").

126. The '972 patent admits that Beel's FIG. 11 (copied as FIG. 4 and incorporated by reference) discloses endpoints:

> These are fixed and are a combination of vendor specific endpoints and a number of standard endpoints and can be interpreted or understood as a custom Driver, a default OS driver and/or a host application as has been described with reference to FIG. 4 do screen sharing and audio.

Ex-1001, 4:28-33 and 15:62-16:6.

127. Therefore, in my view, the "endpoint" is disclosed by Beel regardless of whether it must be on the "functional device" or the "peripheral device."

128. Beel further explains that "*the at least one fixed or a configurable endpoint is a data source or a data sink which is able to store or emit data, of the functional device exposed or made available on the first peripheral device*":

> In an embodiment audio data is captured through a virtual sound card interface added as a logical device over the physical interface provided in the peripheral device. On the processing device only a generic sound driver such as a USB sound driver is required which is generally standard on any modern processing devices such as a PC (UAC1 or UAC2).

Ex-1005, ¶43.

> The peripheral device preferably acts as a composite device comprising for instance a (virtual) audio speaker device. However instead of operating like a speaker the audio is channeled over the communications network. The peripheral device can preferably capture the audio stream with a device driver, for instance a built in ALSA UAC1, and stream the audio to the base unit. … The peripheral device then encodes this time stamp into the audio stream (for instance RTP audio stream) that is streamed to the base unit. At the receiving end, the audio and video streams are then preferably recombined taking into account the time stamp to reach lip synchronization.

Ex-1005, ¶317; *see also*, *id*. ¶¶313-316.

129. Therefore, Beel's disclosure demonstrates that the *"functional device*," like an A/V component attached to the base unit, can be "*exposed or made available on the first peripheral device*." *See also*, *id*. ¶¶43, 50, 56, 75, 93, 119-122, 126, 298, 310-11; ¶120, (the base node may be coupled to "microphones 38 that can be used to transfer audio, e.g. to the processing devices 31") (emphasis added); ¶71 ("a third software code portion [on the peripheral device] for receiving media content from the network and for displaying the media content on the display").

130. Beel discloses that a peripheral device can act as a "virtual audio device" using a USB Audio Class (UAC) interface. This indicates that endpoints of the functional device are "*exposed or made available on the first peripheral device*." Beel states, "[A]udio data is captured at this interface 8-11 internally in the peripheral device 32. This data is then optionally re-encoded and streamed to the communications network to which the peripheral device 32 has access." Ex-1005, ¶319. A POSA would recognize that the peripheral device of Beel can function as a composite device capable of storing and emitting virtual audio/visual data to endpoints, such as a speaker or display.

131. The '827 patent in the Unified Patent Court contains claims that further discuss "descriptor fields," according to the proceedings of that patent. The Patent Owner argues that "*exposed or made available*" should be construed more narrow

based on this alternative forum/patent's differing claim language such as "configuring one or more endpoints with descriptor fields." This narrower interpretation is suggested by amendments in the related European Patent No. EP3732827B1. Ex-1012. While I note that the claim language, specification, and prosecution history are different than with the '972 patent, prior art nonetheless discloses any such narrower interpretation.

132. For example, Christison discloses a method for configuring descriptor fields, which is a technique that is applicable to USB devices. Ex-1011, 6:66-7:5. Christison's method includes:

> intercept a device descriptor request from said first wireless USB enabled device;
>
> read a device descriptor from said wired USB enabled device;
>
> modify said device descriptor so that it is consistent with a device descriptor for any wireless USB enabled device as specified by a predetermined wireless USB standard; and
>
> present said wired USB enabled device as said native wireless USB enabled device by providing said modified device descriptor to said first wireless USB enabled device.
>
> *Id.*, 6:66-7:5, 9:21-32, 9:36-38.

133. To the extent that the combination of Beel and Dinka does not disclose the narrower interpretation of "*exposed*," Christison renders this aspect of the claim obvious. Further, USB devices include configuring descriptor fields. Universal

Serial Bus Specification, Revision 2.0, §§ 9.1.2, 9.2.3 (April 27, 2000) (last accessed Jan. 15, 2025) (http://www.poweredusb.org/pdf/usb20.pdf). A POSA would find it straightforward to apply Christison's teachings to configure USB devices within Beel's system, thereby satisfying the claimed limitation.

> **g) the base unit and the first peripheral device being adapted to transmit and receive data respectively over the communications network from the functional device to the processing device via the at least one fixed or configurable endpoint using the generic communications protocol for communication between the processing device and the first peripheral device,**

134. In my view, the combination of Beel and Dinka discloses this limitation. For example, Beel discloses "*the base unit*" transmitting audio/visual data to "*the first peripheral device*":

> Optional equipment can be cameras 39, 40, 41 for recording the progress of the meeting. These cameras can be linked by a network 51, e.g. a cable network to the router 42 and/or the base node 36. Another optional item is a microphone or microphones 38 that can be used to transfer audio, e.g. to the processing devices 31 and to loud speakers (not shown) attached to the base node 36 or part of the display 44.
>
> Ex-1005, ¶120.

135. Additionally, Beel discloses the peripheral device receiving media content and displaying the media content on the display of the processing device:

> [A] peripheral device is provided for providing communication connectivity to a processing device which is provided with memory, **a display** and an operating system[.] [T]he peripheral device comprising a memory in which executable software code is stored for execution on the processing device, said executable software code comprising: … a third software code portion for receiving media content from the network and for **displaying the media content on the display** in accordance with a set of rules; wherein the first software code portion is adapted to use the generic communication protocol for transferring the media content between the peripheral device and the processing device.

Id., ¶71 (emphasis added); *see also*, *id*., ¶¶50, 56, 75, 93, 119, 122, 126, 298, 310-11.

136. Beel discloses the well-known method of transferring video and audio bidirectionally between a conference call and one or more users' PCs (*i.e*., "processing devices") connected to an online conference. This functionality is achieved through the use of generic communications protocols. For instance, Beel states, "*using the generic communications protocol for communication between the processing device and the first peripheral device*." Ex-1005, ¶71.

137. Additionally, Dinka similarly discloses bidirectional online conferencing, where "the client application is configured to allow a local user of the media appliance to participate in bidirectional communication sessions with other

remote users via the network interface and packet-based network." Ex-1006, abstract. Further, Dinka discloses that "client applications 111 and/or 113 … establish a voice or video call over the Internet 101." Ex-1006, 6:34-37. Dinka also recognizes that "[m]ost computer terminals 102 preferably also comprise a webcam 112," (*i.e.*, a "functional device"). Ex-1006, 6:12-13. Therefore, Dinka discloses bidirectional communication of "data … from the functional device" over the Internet and between user devices.

138. A POSA would recognize that both Beel and Dinka provide systems and methods enabling seamless bidirectional transfer of audio and video during online conferences, fulfilling this claimed limitation. It would have been obvious to combine Beel's system of bidirectional communication using a peripheral device and base unit/node with Dinka's system of bidirectional communication of data from the webcams 112 of user computer terminal using the client application 110. These disclosures illustrate the conventional application of generic protocols in facilitating unified communications systems.

h) wherein the processing device is adapted to host a unified communication between two or more processing devices.

139. In my view, the combination of Beel and Dinka discloses this limitation. Beel discloses:

> the present invention provides an electronic meeting tool for communicating arbitrary media content between different users 37 (with their own processing devices 31, e.g. PC, mobile phone, or tablet) and one display or projector or multiple displays or projectors 44 in the meeting room 30.

Ex-1005, ¶122; *see also id*., abstract, ¶¶13, 44, 50, 56, 71, 75, 87-88, 113, 119, 122, 126, 253-58, 298, 310-11.

140. A POSA would recognize Beel's disclosure conforms with the disclosure of the '972 patent:

> Unified Communications system or tools can make use of video conferencing cloud service including a video conferencing node to allow one or more users located at the first video conferencing endpoint to communicate with one or more users located at the second video conferencing endpoint in a video conference.

Ex-1001, 7:8-13.

141. Further, Beel expressly defines the "*processing device*" as a "host," stating, "Each of the processing devices 31 can be a host device." Ex-1005, ¶117; *see also*, ¶¶142, 196, 221. This definition aligns with the well-known method of transferring video and audio bidirectionally during a conference call to one or more users' PCs (*i.e*., "processing devices") connected to an online conference. Beel's system facilitates such bidirectional communication by employing processing devices that serve as hosts for the conference session.

142. Similarly, Dinka discloses bidirectional online conferencing, explaining that "the client application is configured to allow a local user of the media appliance to participate in bidirectional communication sessions with other remote users via the network interface and packet-based network." Ex-1006, abstract; *see also* § IX.A.2.g (client application 111).

143. A POSA would recognize that both Beel and Dinka provide robust implementations for enabling processing devices to act as hosts in unified communication systems, supporting bidirectional transfer of video and audio. These disclosures collectively satisfy the claimed limitations regarding host devices and online conferencing.

3. Claim 2

a) The system of claim 1 wherein the functional device is any one or more of a microphone, a speakerphone, a speaker, a display, a touchscreen, a projector, a camera, a video camera, a webcamera.

144. In my view, the combination of Beel and Dinka disclose this limitation. For example, Beel discloses various "*functional devices*" that align with those described in the '972 patent. For instance, Beel identifies: "*a microphone*" (Ex-1005, ¶120), "*a speakerphone*" (¶118 ("Audio equipment 46 may be provided, e.g. a telephone that allows other members of the meeting to call in from remote destinations")), "*a speaker*" (¶¶120, 315 ("physical audio device in the base unit")),

"*a display*" (¶¶119, 120,) "a projector" (¶¶40, 119, 122, 123), and "*a camera, a video camera, or a webcamera*" (¶¶119-21).

145. Thus, a POSA would understand that these disclosed functional devices, integral to Beel's system, provide audio-visual communication capabilities for conferencing and collaboration, satisfying the claimed limitations.

4. Claim 3

a) The system of claim 1 wherein the at least one fixed or a configurable endpoint of the functional device exposed on the first peripheral device is one of a human interface device, a mass storage device, a composite device, a microphone, a speakerphone, a speaker, a display, a touchscreen, a projector, a camera, a video camera, or a webcamera.

146. The combination of Beel and Dinka discloses this limitation. Beel discloses endpoints that may be either fixed or configurable. These endpoints are associated with the functional devices, as disclosed in dependent claim 2. For instance, Beel's disclosure of devices such as microphones, cameras, speakers, and displays aligns with this interpretation. *See* § IX.A.2.f. These functional devices can be understood as endpoints when exposed or made available on the first peripheral device for communication with the processing device. Ex-1005, ¶¶43, 50, 119-121, 313-317; *see also* Ex-1001, FIG. 4; *see also* § V (discussing USB endpoints).

147. For example, the '972 patent refers to both the "functional device" and the "endpoint" as being associated with the same "second peripheral device." The

phrase "*at least one fixed or a configurable endpoint…*" is interpreted as "a physical or virtual device that can act as a kind of buffer." This construction is consistent with the disclosure in the prior art.

148. A POSA would recognize that the functional devices disclosed by Beel includes endpoints that act as buffers or communication interfaces, fulfilling the requirements of this limitation.

5. Claim 4

a) The system of claim 1 further comprising means for encoding, optionally encrypting the data.

149. In my view, the combination of Beel and Dinka disclose this limitation. For example, Beel discloses:

> The system of claim 100 further comprising means for encoding, optionally encrypting the audio data.

Ex-1005, claim 101; *see also* ¶¶67, 70, 162, 314, 315, 319, 320, 323 and claim 90. Further, in my view, a POSA would find this limitation obvious as methods of encryption for data communication/transfer were well-known in the art.

6. Claim 5

a) The system of claim 1 wherein the first peripheral device is adapted to present a functional device to the unified communication between two or more processing devices.

150. In my view, the combination of Beel and Dinka disclose this limitation. For example, Beel discloses:

> [T]he present invention provides an electronic meeting tool for communicating arbitrary media content between different users 37 (with their own processing devices 31, e.g. PC, mobile phone, or tablet) and one display or projector or multiple displays or projectors 44 in the meeting room 30.

Ex-1005, ¶122; *see also id*., abstract, ¶¶13, 44, 87-88, 113, 253-58. The received "media content" can be audio/visual data generated by other participants in the meeting or data from the cameras 39, 40, 41. *Id.*, ¶¶118-21; *see also, id.*, ¶¶50, 56, 71, 75, 85, 88-89, 93, 126, 253-71, 298, 310-11. This discloses the well-known method of transferring video and audio bidirectionally from a conference call to one or more users' PCs (*i.e*., "processing devices") connected to a conference online, including data received from "a functional device," e.g., microphones, loudspeakers, or cameras, in the meeting room.

151. Dinka also discloses "*present[ing] a functional device to the unified communication*" this limitation. For example, Dinka discloses that "client applications 111 and/or 113 … establish a voice or video call over the Internet 101." Ex-1006, 6:34-37. Dinka also recognizes that "[m]ost computer terminals 102 preferably also comprise a webcam 112," (*i.e.*, a "functional device"). Ex-1006, 6:12-13. Therefore, Dinka discloses bidirectional communication of "data … from the functional device" over the Internet and between user devices.

7. Claim 6

a) The system of claim 1 adapted to expose the same type of functional device to the processing device as is connected to the Base Unit further comprising at least one driver for the functional device installed on the processing device.

152. In my view, the combination of Beel and Dinka disclose this limitation. A POSA would understand that Beel discloses exposing a composite USB device to transmit audio/visual call information to one or more functional devices. These functional devices are then used to create an audio/visual output. For example, Beel describes a peripheral device acting as a composite USB device to facilitate the transfer of audio streams and other media content. This composite device enables communication between the processing device and functional devices, such as speakers or displays, connected to the Base Unit:

> The peripheral device preferably acts as a composite device comprising for instance a (virtual) audio speaker device. However instead of operating like a speaker the audio is channeled over the communications network. The peripheral device can preferably capture the audio stream with a device driver, for instance a built in ALSA UAC1, and stream the audio to the base unit.
> Ex-1005, ¶317.

153. Beel further discloses that an audio functional device is "*connected to the Base Unit*" to play the audio stream received from the peripheral device. Therefore, a POSA would recognize this disclosure as meaning the "*same type of*

functional device" (*e.g.*, an audio device) is exposed to the processing device, allowing seamless communication and integration within the system:

> With reference to the audio data on the processing device 31 such as a client PC, the audio is sent over a port using generic drivers such as over a USB port 8 using the <u>standard built-in generic audio driver such as UAC driver 7</u> … This information is then…transferred to the communications network … On the base unit 33 the audio information stream is recovered at a suitable communications interface such as the WiFi access point 22. The audio is then unpacked in an unpacker 23, decoded in a decoder 24 before being before being offered to an audio mixer 28.
>
> Ex-1005, ¶323 (emphasis added); *see also id*. ¶¶43, 312, 319 and Fig. 11.

154. Additionally, Beel explains that the Universal Audio Class (UAC) driver 7 serves as *"a driver for the functional device installed on the processing device*." This generic driver facilitates the communication between the processing device and functional devices, highlighting Beel's use of standard protocols to achieve interoperability.

155. A POSA would understand that Beel's disclosures provide a robust framework for exposing functional devices via composite USB devices and pre-installed drivers, fulfilling the claimed limitations.

8. Claim 7

a) The system of claim 1 wherein the functional device is a second peripheral device.

156. In my view, the combination of Beel and Dinka disclose this limitation. For example, Beel discloses:

> The base node 36 may also be a processing device or host computer and may be coupled to a second connection unit 49 that provides access to the network 50 thus linking all of the processing devices 31, 36 together.

Ex-1005, ¶118; *see also* ¶¶120 (explaining that the cameras (i.e., a "functional device") can be linked by cable network (i.e., a "peripheral device") to the base node 36), 126, 129 and Fig. 1a.

9. Claim 8

a) The system of claim 1 wherein the functional device is a data capturing device.

157. In my view, the combination of Beel and Dinka disclose this limitation. For example, Beel discloses "*functional device[s]*" that include microphones and cameras. These devices are specifically described and well-known in the art as devices which capture "data", which categorizes them as data capturing devices. For example, microphones are used to capture audio data, and cameras are used to capture video or image data during conferencing or similar applications. *See*, *e.g.*, Ex-1005, ¶¶119-21 and Fig. 1a. *See also* § IX.A.3.a above.

158. Thus, a POSA would recognize that these functional devices disclosed in Beel fulfill the claimed limitation by providing data capturing capabilities essential for audio-visual communication.

10. Claim 9

a) A method for connecting a processing device to a functional device connected to or in a base unit of a communications network,

159. *See* claim 1, § IX.A.2.a above.

b) the processing device having a memory, a display and an operating system,

160. *See* claim 1, § IX.A.2.b above.

c) the base unit having a transmitter and

161. *See* claim 1, § IX. A.2.d above.

d) the first peripheral device having a receiver

162. *See* claim 1, § IX.A.2.e above.

e) the method comprising: coupling a first peripheral device to the processing device via a generic communications protocol,

163. *See* claim 1, § IX.A.2.c above.

f) providing at least one fixed or a configurable endpoint, where the at least one fixed or a configurable endpoint is a data source or a data sink which is able to store or emit data, of the functional device exposed or made available on the first peripheral device;

164. *See* claim 1, § IX.A.2.f above.

g) transmitting data from the base unit and receiving the data at the first peripheral device over the communications network from the functional device to the processing device via the at least one fixed or configurable endpoint using the generic communications protocol for communication between the processing device and the first peripheral device,

165. *See* claim 1, § IX.A.2.g above.

h) further comprising hosting a unified communication between two or more processing devices on the processing device.

166. *See* claim 1, § IX.A.2.h above.

11. Claim 10

a) The method of claim 9 wherein the functional device provides any one or more of a microphone, a speakerphone, a speaker, a display, a touchscreen, a projector, a camera, a video camera, a webcamera.

167. *See* claim 2, § IX.A.3 above.

12. Claim 11

a) The method of claim 9 further comprising presenting the at least one fixed or a configurable endpoint of the functional device exposed on the first peripheral device as one of a human interface device, a mass storage device, a composite device, a microphone, a speakerphone, a speaker, a display, a touchscreen, a projector, a camera, a video camera, or a webcamera.

168. *See* claim 3, § IX.A.4 above.

13. Claim 12

a) The method of claim 9 further comprising encoding, and/or optionally encrypting the data.

169. *See* claim 4, § IX.A.5 above.

14. Claim 13

a) The method of claim 9 further comprising the first peripheral device presenting a functional device to the unified communication between two or more processing devices.

170. *See* claim 5, § IX.A.6 above.

15. Claim 14

a) The method of claim 9 comprising exposing the same type of functional device to the processing device as is connected to the Base unit and using at least one driver for the functional device installed on the processing device.

171. *See* claim 6, § IX.A.7 above.

16. Claim 15

a) A peripheral device adapted to be coupled to a processing device via a generic communications protocol,

172. *See* claim 1, § IX.A.2.c above.

b) the peripheral device having a receiver

173. *See* claim 1, § IX.A.2.e above.

c) and at least one fixed or a configurable endpoint, where the at least one fixed or a configurable endpoint is a data source or a data sink which is able to store or emit data, of a functional device exposed or made available on the first peripheral device;

174. *See* claim 1, § IX.A.2.f above.

d) the receiver of the first peripheral device being adapted to receive data over the communications network from the functional device and for sending the data to the processing device via the at least one fixed or configurable endpoint using the generic communications protocol for communication between the processing device and the peripheral device,

175. *See* claim 1, § IX.A.2.g above.

e) wherein the peripheral device is configured to present the processing device to host a unified communication between two or more processing devices.

176. *See* claim 1, § IX.A.2.h above.

17. Claim 16

a) The peripheral device of claim 15 wherein the at least one fixed or a configurable endpoint of the functional device exposed on the first peripheral device is one of a human interface device, a mass storage device, a composite device, a microphone, a speakerphone, a speaker, a display, a touchscreen, a projector, a camera, a video camera, or a webcamera.

177. *See* claim 3, § IX.A.4 above.

18. Claim 17

a) A computer program product comprising a non-transitory signal storage means for storing computer program instructions that, when executed on a processor, carry out any of the methods steps of claim 9.

178. *See* claim 9, § IX.A.10 above. In my view, the combination of Beel and Dinka disclose this limitation. For example, Beel discloses "Any of the above software code stored on a non-transitory storage medium." Ex-1005, ¶76.

19. Claim 18

a) The peripheral device of claim 15 wherein the at least one fixed or configurable endpoint has one transfer direction.

179. In my view, the combination of Beel and Dinka disclose this limitation. Since bidirectional communication is disclosed in Beel's system, the endpoint supports at least *one transfer direction*. A POSA would understand that endpoints in Beel's system are designed to facilitate either unidirectional or bidirectional data transfer, depending on the functionality of the device.

180. For example, Beel's disclosure specifies that microphones are functional devices that only transmit data (*e.g.*, audio input to the system), while speakers and displays are functional devices that only receive data (*e.g.*, audio or video output from the system). Ex-1005, ¶¶43, 50, 56, 75, 93, 119-122, 126, 298, 310-11. This segmentation of roles ensures seamless communication and interaction within the system, with endpoints supporting their intended transfer direction.

181. Thus, a POSA would recognize that Beel's disclosures align with the claimed limitations, demonstrating that the system accommodates endpoints with either one-way or two-way data transfer capabilities.

B. Claims 1-18 of the '972 Patent Are Unpatentable as Obvious Over the Combination of Kaplan and Van De Laar and Optionally in View of Christison

1. Rationale to Combine

182. In my opinion, Kaplan and Van de Laar disclose systems for wirelessly presenting audio/visual content. Kaplan focuses on presenting content from a computer screen to a remote display device. Ex-1008, abstract, ¶26, FIG. 2. Van de Laar extends this concept by explaining that the content can include information from a unified communications call, such as Skype. Ex-1007, ¶128. A POSA would have been motivated to modify Kaplan's receiver 110 to incorporate features of Van de Laar's WDH to enhance usability. This modification would enable the use of multiple functional devices, beyond the display in Kaplan, to access functional

devices in a unified communications call. Ex-1007, ¶9 ("It is an object of the invention to provide a system for wireless docking that enables multiple dockees to wirelessly dock to a host device in an easy to use manner, enabling shared usage of A/V peripherals without causing interference.").

183. Van de Laar also discloses details of one known method of connecting functional devices to client processing devices by using data sources and data sinks. Ex-1007, ¶123-126, FIG. 3. It is my opinion that a POSA would have understood that there were several known techniques for connecting functional devices, such as speakers, microphones and cameras, to client devices to, for example, implement a Skype unified conferencing call. The combination of Van de Laar and Kaplan would predictably result in a unified system of client processing devices and functional devices used in a Skype unified conferencing call.

184. The '972 patent acknowledges (AAPA) that Skype was a known method for performing the web conferencing disclosed by Kaplan. Ex-1001, 6:59-63, 7:66-8:21. Supporting this, Ex-1009 demonstrates that Skype was available online as early as 2012. Consequently, combining Kaplan and Van de Laar would naturally lead to the use of Skype or similar prior art unified communication call software, because Skype was a well-known technique to improve similar systems.

The combination of these references would predictably result in a web conferencing system that uses unified communication call software, such as Skype.

185. Christison discloses a method for wirelessly connecting functional devices to personal computers via a wireless peripheral device. Ex-1011, abstract. I note that a POSA would be familiar with and understand that connecting and presenting a remote functional device as a virtual device to a user computer was well known in the art. *See* § V (discussing Scragg and other wirelessly connected USB devices). Christison discloses one example of this technique, which emphasizes how its system provided advantages to the art, including of efficiency, by its method of presenting wireless USB devices as "native devices," which improves usability and system integration. Ex-1011, abstract, 6:13-19. This efficiency can be, for example, being able to use standard drivers for communicating with native devices, reducing time to develop the system and reducing its complexity. Kaplan teaches connecting remote devices to a client computer. Ex-1008, Abstract, ¶¶2-6, 16-17, 44, FIG. 2. Christison's technique of presenting a remote device as "native" provides a straightforward way to implement Kaplan's virtual devices. Ex-1011, abstract.

186. A POSA would have been motivated to combine the teachings of Kaplan, Van de Laar, and Christison. Christison's approach to presenting devices as "native" complements Kaplan and Van de Laar's systems, resulting in a unified

communication system that uses USB protocols to present remote functional devices as local or "native" functional devices. This combination applies well-known techniques to achieve predictable improvements in system usability and functionality.

2. Claim 1

a) A system for connecting a processing device to a functional device connected to or in a base unit of a communications network,

187. In my view, the combination of Van de Laar and Kaplan disclose this limitation. For example, Kaplan discloses *a system for connecting a processing device* ("computer 220") *to a functional device* ("display device 210") which is *connected to or integrated into a base unit* ("receiver 110") *of a communications network*. Kaplan describes the transmitter 120 as including "a wireless transceiver 450 that is operable to transmit data from the computer to the receiver 110. For example, the data may include video and audio data for display on the display device." Ex-1008, Abstract, ¶¶2-6, 16-17. A POSA would recognize that the transmitter 120 connects a processing device to a base unit. Kaplan further specifies that "video footage may be transmitted from the computer 220 through the transmitter 120 to the receiver 110 and then displayed on the display device 210." Ex-1008, ¶28; *see also* ¶18, 44, FIG. 2.

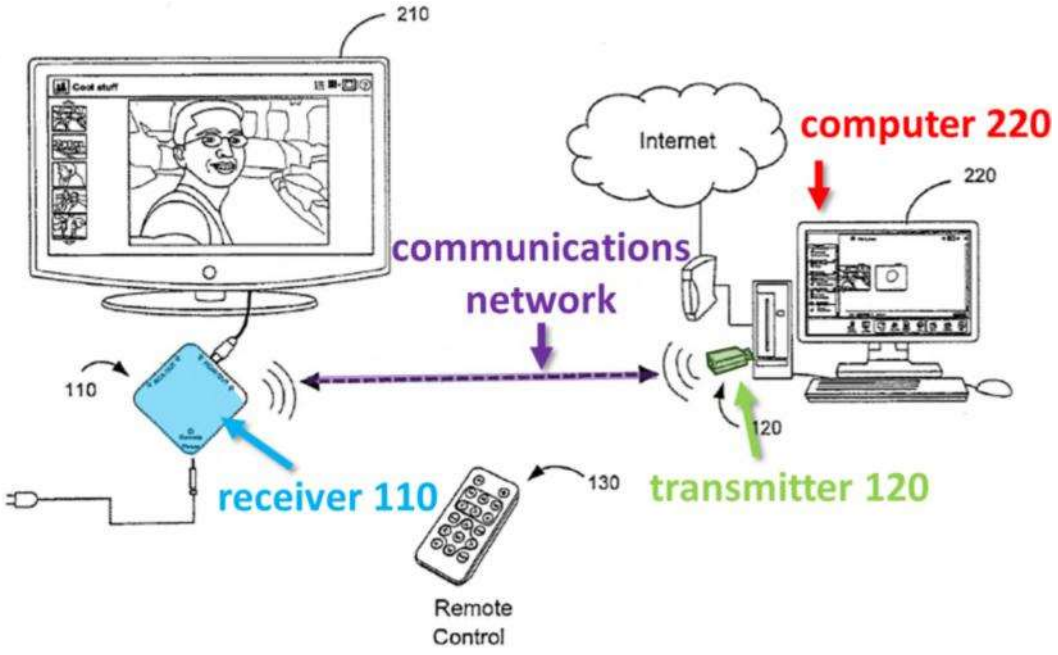

FIG. 2

Ex-1008, FIG. 2.

188. Kaplan identifies the "receiver 110" as a network element in a communications channel established between the transmitter 120 and receiver 110. This channel operates "in accordance with commercially available wireless communications standards," (*i.e.*, a "communications network"). Ex-1008, ¶23, ¶31.

189. "[F]unctional device[s]" can include cameras, microphones, speakers, and displays (*See* Ex-1001, claim 2), which aligns with Kaplan's system, as the display device 210 functions as a "functional device" that receives and presents video and audio data. Ex-1008, ¶21. Further, this display device 210 is connected to the receiver 110, and therefore, the "functional device [is] connected to … a base unit." *See* Ex-1008, ¶21.

190. Thus, a POSA would recognize that Kaplan's system provides the claimed functionality by effectively enabling communication between the processing device and the functional device through the base unit.

b) the processing device having a memory, a display and an operating system,

191. In my view, the combination of Van de Laar and Kaplan disclose this limitation. For example, Kaplan discloses a *processing device* ("computer 220") *having a memory, a display* (*e.g.*, as illustrated in FIG. 2 above), *and an operating system*, such as Windows®. *See*, *e.g.*, Ex-1008, ¶¶47¬49, 59, FIG. 2.

c) the system comprising: a first peripheral device being adapted to be coupled to the processing device via a generic communications protocol,

192. In my view, the combination of Van de Laar and Kaplan disclose this limitation. For example, Kaplan discloses *a first peripheral device*, referred to as "transmitter 120," that is *adapted to be coupled to a processing device*, the "computer 220," *via a generic communications protocol*. Kaplan specifies that this protocol is a standard USB communications protocol, describing the transmitter as "compliant with the Universal Serial Bus (USB) standard." Ex-1008, ¶17. Kaplan further emphasizes the suitability and ubiquity of the USB standard, noting, "The ubiquity of the USB standard and the availability of USB ports, either on the computer or on a USB extender connected to the computer, make the use of a USB

connection a suitable connector for embodiments of the present invention." Ex-1008, ¶45.

193. Kaplan also describes a method of "establishing a connection between a transmitter and a computer" (Ex-1008, ¶58) and provides additional details about the transmitter, including that it "includes a data connector configured to couple the transmitter unit to the computing device." Ex-1008, claim 10. Kaplan explicitly states that "the data connector comprises a Universal Serial Bus (USB) data connector," which is compatible with the generic USB communications protocols associated with USB standards. Ex-1008, claim 11.

194. Thus, a POSA would recognize that Kaplan's disclosure demonstrates both the physical coupling of the transmitter to the processing device and electronically communicative coupling by the use of a generic USB communications protocol, satisfying the claimed limitation.

d) the base unit having a transmitter and

195. In my view, the combination of Van de Laar and Kaplan disclose this limitation. For example, Kaplan's discloses a *base unit* ("receiver 110") *having a transmitter* ("transceiver 350"). Kaplan explains that "the transceiver 350 is operable to provide two-way communications with a matched transceiver in the transmitter 120." Ex-1008, ¶42. Kaplan further states that "the receiver includes a first wireless transceiver." Ex-1008, ¶6. A POSA would recognize a transceiver as including both

a transmitter and receiver, and therefore enabling bidirectional communication. Additionally, Kaplan indicates that "the receiver 110, which may be a transceiver, includes the ability to both transmit and to receive data from a matched transceiver (*i.e.*, transmitter 120)." Ex-1008, ¶16. This functionality is illustrated in Kaplan's FIG. 3, which depicts the receiver's transceiver within the overall system architecture.

196. Thus, a POSA would understand that Kaplan's disclosure satisfies the claimed limitation of "*the base unit having a transmitter*," as the receiver includes a transceiver capable of transmitting data as part of its two-way communication functionality.

e) the first peripheral device having a receiver and

197. In my view, the combination of Van de Laar and Kaplan disclose this limitation. For example, Kaplan discloses *the first peripheral device* ("transmitter 120") *having a receiver* ("transceiver 450"). Kaplan specifies that "the transmitter 120 also includes transceiver 450 and antenna 452, providing for two-way communications with the receiver 110 paired with the transmitter 120." Ex-1008, ¶45. The wireless transceiver is further described as "operable to transmit data from the computer to the receiver 110." Ex-1008, ¶19. Kaplan elaborates that "in a particular embodiment, the transmitter 120 is a dongle including a connector 122 compliant with the Universal Serial Bus (USB) standard and operable to be inserted

into a USB port of a computer." Ex-1008, ¶17. The transmitter 120 integrates a wireless transceiver (transceiver 450) to enable bidirectional communication with the receiver 110. Ex-1008, ¶¶16-17, FIG. 4.

198. Both Kaplan and the '972 patent also disclose similar peripheral devices described as "a USB dongle" Ex-1008, ¶¶17, 58; Ex-1001, 7:56-57, 9:10-22. The figures also illustrate similar dongles:

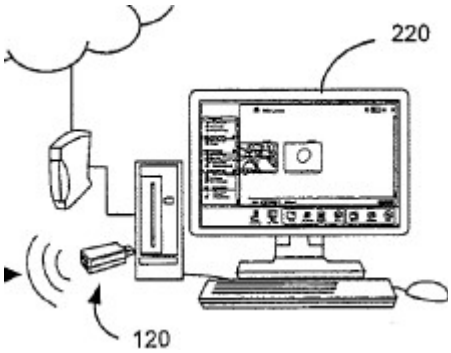

Ex-1008, FIG. 2 (transmitter 120)

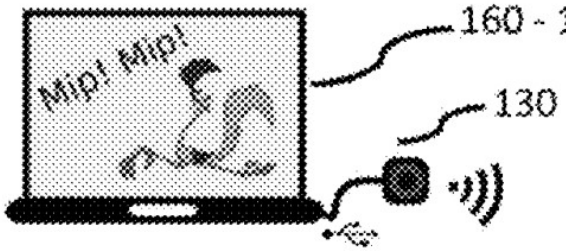

Ex-1001, FIG. 5 (peripheral device 130)

199. Thus, a POSA would recognize that Kaplan's peripheral device, described as a USB dongle with a wireless transceiver, satisfies the claimed limitation of the first peripheral device having a receiver.

> **f) at least one fixed or a configurable endpoint, where the at least one fixed or a configurable endpoint is a data source or a data sink which is able to store or emit data, of the functional device exposed or made available on the first peripheral device;**

200. In my view, the combination of Van de Laar and Kaplan disclose this limitation. Further, optional reference Christison likewise discloses elements of this

limitation. For example, Kaplan discloses that both the "*peripheral device*" and the "*functional device*" have an "*endpoint*." Specifically, Kaplan describes "*the first peripheral device having ... at least one fixed or a configurable endpoint,*" such as endpoints responsible for presenting the transmitter 120 to the processing device (computer 220) as either a mass storage device or a transmitter. Ex-1008, ¶¶46, 50-52. These endpoints are described as being either "*fixed*" (*e.g.*, a presented mass storage device) or "*configurable*" (*e.g.*, a presented transmitter device). Kaplan also discloses an "*endpoint ... of the functional device*," such as the display 210 connected to the receiver 110. For instance, Kaplan illustrates that the display functions as an endpoint for receiving and displaying data transmitted through the system. Ex-1008, ¶¶21-22, 28-34, claim 14, FIG. 2. These endpoints of functional devices are similarly "*fixed*" or "*configurable*," depending on whether they are set up or capable of providing display functions. Therefore, Kaplan clearly discloses the concept of "*endpoints*" on both the *peripheral* and *functional devices,* fulfilling the claimed limitation regardless of whether the endpoints are required to reside specifically on one or the other.

201. Kaplan further discussed that *the "the at least one fixed or a configurable endpoint is a data source or a data sink which is able to store or emit*

data, of the functional device exposed or made available on the first peripheral device":

> The transmitter initially operates in a first mode associated with a mass storage device. Thus, when the transmitter is connected to the computer, for example, by plugging the USB connector of the transmitter into a USB port on the computer, the transmitter appears or is registered as a mass storage device in the operating system.
> Ex-1008, ¶59.
>
> The method further includes transmitting the video content from the transmitter to the receiver while operating in the second mode (618). The second mode of operation continues while the transmitter is connected to the computer.
> Ex-1008, ¶61; *see also*, *id*. ¶8.

202. Kaplan's endpoints allow the "*functional device*," such as display 210 connected to the receiver 110, to be "*exposed or made available on the first peripheral device*." *Id*., ¶¶5, 6, 8, 16-17, 22, 57, claims 1, 10, 14, FIG. 2. The endpoint is exposed or made available because data from the display is transmitted to or from the endpoint on the peripheral device. The transmitter 120 of Kaplan has a transmitter device or endpoint able to *store or emit data*, such as video data *of the functional device* (display 210).

203. Additionally, Van De Laar complements Kaplan's disclosure of endpoints by further describing an endpoint that can store or emit data from functional devices and act as a *data source* or *data sink*:

> The primary dockee will function as a WFM source and the WDH as both a WFM sink and source. In order to allow the secondary dockee(s) to function as a WFM sink the WDH should forward the WFM packets in broadcast mode.

Ex-1007, ¶126 (emphasis added); *see also*, *id*. ¶123-125, FIG. 3 (reproduced below).

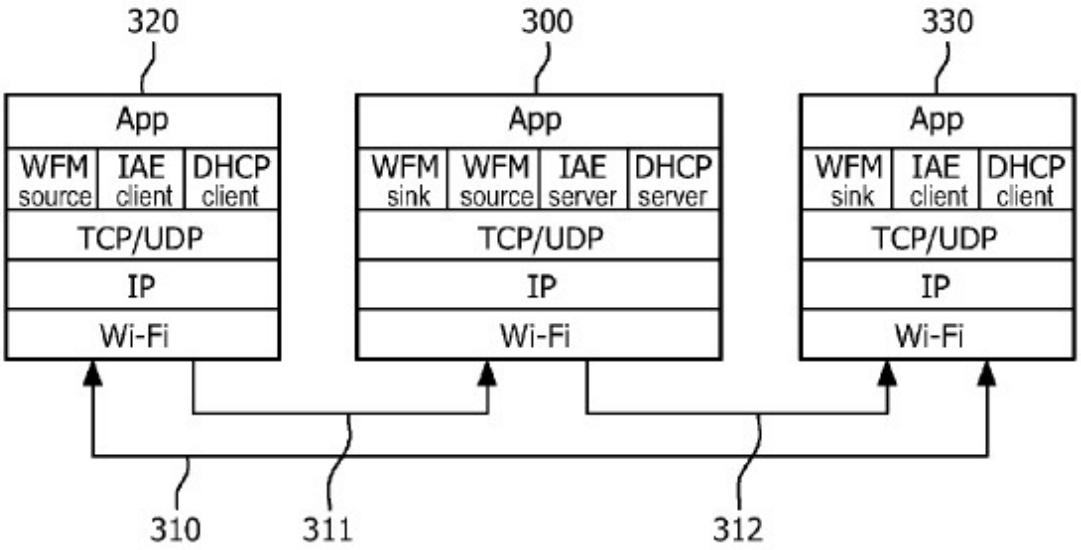

FIG. 3

Ex-1007, FIG. 3

204. Van De Laar also discloses a "*functional device exposed or made available*":

> [V]arious dockees receive different sets of peripheral functions that can be accessed. In particular, the host, e.g. a PC, may make available to dockee shared peripherals as well as exclusive peripherals.

Ex-1007, ¶106 (emphasis added). *See also*, *id*. ¶¶82 ("Primary dockee devices will have direct access to the peripheral functions offered by the WDH"), 92 ("The multiple dockees are connected simultaneously to the WDH, the WDH managing a set of wired and/or wireless peripherals and provides dockees access to these peripherals" (emphasis added)), 93 ("Moreover, the A/V output may be offered to a secondary dockee through a simulated peripheral (*e.g.* simulated webcam) that would appear to the dockee as if it were a normal peripheral" (emphasis added)).

205. The '827 patent in the Unified Patent Court contains claims that further discuss "descriptor fields," according to the proceedings of that patent. The Patent Owner argues that "*exposed or made available*" should be construed more narrow based on this alternative forum/patent's differing claim language such as "configuring one or more endpoints with descriptor fields." This narrower interpretation is suggested by amendments in the related European Patent No. EP3732827B1. Ex-1012. While I note that the claim language, specification, and prosecution history are different than with the '972 patent, prior art nonetheless discloses any such narrower interpretation.

206. I understand that the Patent Owner might argue that "*exposed or made available*" should be construed narrowly, requiring specific configurations such as "configuring one or more endpoints with descriptor fields." This narrower interpretation is suggested by amendments in the related European Patent No. EP3732827B1. Ex-1012.

207. For example, Christison discloses a method for configuring descriptor fields, which is a technique applicable to USB devices. Ex-1011, 6:66-7:5. Christison's method includes:

> intercept a device descriptor request from said first wireless USB enabled device;
>
> read a device descriptor from said wired USB enabled device;
>
> modify said device descriptor so that it is consistent with a device descriptor for any wireless USB enabled device as specified by a predetermined wireless USB standard; and
>
> present said wired USB enabled device as said native wireless USB enabled device by providing said modified device descriptor to said first wireless USB enabled device.
>
> *Id*., 6:66-7:5, 9:21-32, 9:36-38.

208. To the extent that the combination of Kaplan and Van de Laar does not disclose the narrower interpretation of "*exposed*," Christison renders this aspect of the claim obvious. Further, USB devices include configuring descriptor fields. Universal Serial Bus Specification, Revision 2.0, §§ 9.1.2, 9.2.3 (April 27, 2000)

(last accessed Jan. 15, 2025) (http://www.poweredusb.org/pdf/usb20.pdf). A POSA would find it straightforward to apply Christison's teachings to configure USB devices within Beel's system, thereby satisfying the claimed limitation

> **g) the base unit and the first peripheral device being adapted to transmit and receive data respectively over the communications network from the functional device to the processing device via the at least one fixed or configurable endpoint using the generic communications protocol for communication between the processing device and the first peripheral device,**

209. In my view, the combination of Van de Laar and Kaplan disclose this limitation. For example, Kaplan discloses that "two-way communication is established between the receiver 110 and the transmitter 120." Ex-1008, ¶28. This bidirectional communication is further illustrated in FIG. 2, which shows two-way communication between "the peripheral device" (transmitter 120) and the base unit (receiver 110). Kaplan also discloses:

> The receiver 110, which may be a transceiver, includes the ability to both <u>transmit and to receive data</u> from a matched transceiver (*i.e.*, transmitter 120).
> Ex-1008, ¶16 (emphasis added).

> The transmitter 120, which may also be a transceiver, includes the ability to both <u>transmit and receive data</u> from a matched transceiver (*i.e.*, receiver 110).
> Ex-1008, ¶17 (emphasis added).

210. Kaplan thereby discloses bidirectional data communication between devices connected via a communications network, which a POSA would understand was well-known in the art at the time of the alleged invention. Further, Kaplan recognizes that data transmission is possible in both directions: "It should be noted that communications both downstream (*i.e.*, transmitter to receiver) and upstream (*i.e.*, receiver to transmitter) are provided by embodiments of the present invention." Ex-1008, ¶39.

211. This two-way communication is achieved "*via the at least one fixed or configurable endpoint using the generic communications protocol for communication between the processing device and the first peripheral device.*" The USB standard's uses endpoints for data transmission from source to sink or vice versa. *See* § V (describing the USB protocol and endpoints). Kaplan also explains that generic USB communications protocols, such as those associated with the mass storage USB endpoints of the transmitter 120, facilitate *communication between the processing device* (computer 220) *and the first peripheral device* (transmitter 120).:

> Thus, when the transmitter is connected to the computer, for example, by plugging the USB connector of the transmitter into a USB port on the computer, the transmitter appears or is registered as a mass storage device in the operating system. In some embodiments, software stored on the memory of the transmitter can be uploaded and

> installed on the computer while the transmitter is operating in the first mode (614).
>
> Ex-1008, ¶59.

212. Van De Laar complements Kaplan's disclosure by further detailing *transmit*[*ting*] *and receiv*[ing] *data respectively over the communications network from the functional device to the processing device*:

> [T]he WDH device is further configured to create and provide a video and/or audio stream representing the video and/or audio output that is sent by primary dockees to the one or more display and/or audio peripherals. This allows all dockees (primary and secondary) to monitor the merged display output and/or audio output and follow the presentation on their own screen and/or headphones. This is very useful for large meeting/lecture rooms, which may be noisy and where not everyone may have a good clear visibility and readability of the display peripheral(s) being driven by the primary dockees, and is useful to get better visibility and control over the screen for users of other primary dockees who may wish to simultaneously share the screen in order to collaborate.

Ex-1007, ¶96; *see also*, *id*., ¶¶55 ("[T]he primary dockee gets access to a display, whereas the secondary dockee is enabled to monitor the output on the display by receiving a video data stream of a peripheral similar to a camera function"), 103 ("[A] dockee device may connect to the video and/or audio stream provided by the WDH that represents the video and/or audio output that is sent by

primary dockees to the one or more display and/or audio peripherals, the dockee device rendering the respective stream being received on its screen and/or audio output devices. This allows all dockees (primary and secondary) to monitor the merged display output and/or audio output and follow the presentation on their own screen and/or headphones").

h) wherein the processing device is adapted to host a unified communication between two or more processing devices.

213. I understand and apply the definition of "unified communication" as identified above. *See* § VII.D. Accordingly, "*host*[ing] *a unified communication between two or more processing devices*" means hosting an audio or audio-visual communication.

214. In my view, the combination of Van de Laar and Kaplan disclose this limitation. For example, Van De Laar discloses the use of the well-known Skype software, which is capable of hosting group communications over internet (*See* § V (Background of the Technology).

> [T]he WDH may enable primary dockees to provide output to the WDH and/or its audio peripherals through an audio stream between the dockee and the WDH. This may be based on WSB Audio, Wi-Fi Direct Play Service, VoIP, XMPP, Skype, DLNA or other audio streaming mechanism.
> Ex-1007, ¶128.

215. Van De Laar also discloses:

> The system includes a host device 100 for wireless communication with multiple dockee devices 120,130,140, for example mobile phones, laptops or tablet computers.

Ex-1007, ¶74 (emphasis added); *see also*, *id*., ¶60 ("the docking processor may be arranged for accommodating direct communication between two dockee devices, for example to enable an exchange of questions and answers, or data. Such direct communication may be applied to enable messaging as a user function. Furthermore, the docking processor may be arranged for assigning multiple dockee devices to a group and accommodating direct communication between dockee devices of the group. Within such group, all members are now enabled to communicate"), 75-76, 120, 124, 166-167).

3. Claim 2

a) The system of claim 1 wherein the functional device is any one or more of a microphone, a speakerphone, a speaker, a display, a touchscreen, a projector, a camera, a video camera, a webcamera.

216. In my view, the combination of Van de Laar and Kaplan disclose this limitation. For example, Kaplan discloses "*the functional device is…a display* ("display device 210"). *See*, *e.g*., Ex-1008, Abstract, ¶¶2-6, 16-18, 28, 44, FIG. 2.

217. Van de Laar additionally discloses *functional device[s]*, which are referred to as "peripherals", which can include, "wireless mice, keyboards, display

devices, audio devices, webcams, printers, storage devices, USB hubs." Ex-1007, ¶73; *see also*, *id*., ¶¶62. *See also* § IX.B.2.a

4. Claim 3

a) The system of claim 1 wherein the at least one fixed or a configurable endpoint of the functional device exposed on the first peripheral device is one of a human interface device, a mass storage device, a composite device, a microphone, a speakerphone, a speaker, a display, a touchscreen, a projector, a camera, a video camera, or a webcamera.

218. I understand and apply the definition of "*fixed or a configurable endpoint*" as identified above. *See* § VII.F. In my view, the combination of Van de Laar and Kaplan disclose this limitation. For example, Kaplan discloses a data source or sink as display 210. (*See*, *e.g.*, Ex-1008, Abstract, ¶¶2-6, 16-18, 28, 44, FIG. 2.) Moreover, Van Der Laar also discloses peripherals, such as "wireless mice, keyboards, display devices, audio devices, webcams, printers, storage devices, USB hubs," which are, or at least include, data sources or sinks. Ex-1007, ¶73.

5. Claim 4

a) The system of claim 1 further comprising means for encoding, optionally encrypting the data.

219. In my view, the combination of Van de Laar and Kaplan discloses this limitation. For example, Kaplan discloses:

> [T]he receiver 110 may have significant computing resources. Video processing, buffering, storage, and the like may be performed in the receiver.

Ex-1008, ¶27; *see also*, *id*. ¶32, 48 (regarding "codecs" where *encoding* is a form of data processing). I note that Kaplan also discloses securing data using encryption. Ex-1008, ¶54 and claims 6, 7, and 13.

220. Moreover, Van De Laar also discloses, "the read access may be to the original, full resolution AV data, or to a modified, e.g. scaled and/or <u>transcoded</u>, representation of the primary AV data." Ex-1007, ¶56 (emphasis added). Van de Laar also discloses using standard encrypted secure WiFi connections. *Id*., ¶¶118. Secure wi-fi connections were ubiquitous and, as of at least 2017, used standards including WEP, WPA, WPA2, and AES, as by the Wi-Fi Alliance in 2017 (Ex-1033). Therefore, a POSA would have understood the secure communication protocols referred to in both Kaplan and Van de Laar would include encryption.

6. Claim 5

a) Claim 5: The system of claim 1 wherein the first peripheral device is adapted to present a functional device to the unified communication between two or more processing devices.

221. In my view, the combination of Van de Laar and Kaplan disclose this limitation. For example, Van De Laar discloses "*the first peripheral device is*

adapted to present a functional device to the unified communication between two or more processing devices":

> [T]he docking processor may be arranged for accommodating direct communication between two dockee devices, for example to enable an exchange of questions and answers, or data. Such direct communication may be applied to enable messaging as a user function. Furthermore, the docking processor may be arranged for assigning multiple dockee devices to a group and accommodating direct communication between dockee devices of the group. Within such group, all members are now enabled to communicate.

Ex-1007, ¶60 (emphasis added); *see also*, *id*., 56 ("the docking processor is arranged for providing, to the primary dockee device, write access to the at least one peripheral…providing, to the secondary dockee device, read access to the at least one peripheral for transferring at least part of the AV data to be rendered"), 74-76, 120, 124, 128, 166-167.

7. Claim 6

a) The system of claim 1 adapted to expose the same type of functional device to the processing device as is connected to the Base Unit further comprising at least one driver for the functional device installed on the processing device.

222. In my view, the combination of Van de Laar and Kaplan, and optionally Christison, disclose this limitation. For example, Van de Laar discloses a system for connecting remote devices to a host computer: "A/V output may be offered to a

secondary dockee through a simulated peripheral (e.g. simulated webcam) that would appear to the dockee as if it were a normal peripheral." Ex-1007, ¶93. The simulated webcam appears to the dockee "as a real peripheral (e.g. USB webcam)." Ex-1007, ¶54. Further, it would have been obvious to a POSA that such a connection uses a driver, as a driver is a necessary component to provide electronic communication between devices and is well-known in the art. Ex-1007, ¶¶123-126, FIG. 3. Further, Christison explicitly discloses the use of drivers for managing device communication in a similar context. Ex-1011, 3:66-4:51. Thus, a POSA would recognize that Christison's disclosure reinforces the understanding that drivers are a critical component for enabling communication in systems like those described by Van de Laar. Combining the teachings of Van de Laar and Christison would provide a predictable solution, ensuring efficient connectivity and device management using drivers.

8. Claim 7

a) The system of claim 1 wherein the functional device is a second peripheral device.

223. In my view, the combination of Van de Laar and Kaplan disclose this limitation. Further, Claim 7 includes no limitations regarding the structure or function of the "*second peripheral device.*" Van De Laar discloses wireless communication between dockee devices and *functional device[s]*, which are referred

to as "peripheral devices" or "peripherals." *See*, *e.g.*, Ex-1007, Abstract, ¶¶1, 8-9, 62, 73, 160. The '972 patent states that "a second peripheral device [is] selected from the non-exhaustive list given above of a TV, video device, audio device, speakerphone, camera, [or] display." Ex-1001, 11:11-14. This aligns with Van de Laar's disclosure of peripherals devices that include "wireless mice, keyboards, display devices, audio devices, webcams, printers, storage devices, USB hubs." Ex-1007, ¶73.

9. Claim 8

a) The system of claim 1 wherein the functional device is a data capturing device.

224. In my view, the combination of Van de Laar and Kaplan disclose this limitation. For example, Van De Laar discloses "*functional device[s]*" that can include ""wireless mice, keyboards…audio devices, webcams…and USB hubs" (Ex-1007, ¶73), each of which capture data and is therefore a *data capturing device*. *See also, id.,* FIG. 1 and § IX.B.3 above.

10. Claim 9

a) A method for connecting a processing device to a functional device connected to or in a base unit of a communications network,

225. *See* claim 1, § IX.B.2.a above.

b) the processing device having a memory, a display and an operating system,

226. *See* claim 1, § IX.B.2.b above.

c) the base unit having a transmitter and

227. *See* claim 1, § IX.B.2.d above.

d) the first peripheral device having a receiver

228. *See* claim 1, § IX.B.2.e above.

e) the method comprising: coupling a first peripheral device to the processing device via a generic communications protocol,

229. *See* claim 1, § IX.B.2.c above.

f) providing at least one fixed or a configurable endpoint, where the at least one fixed or a configurable endpoint is a data source or a data sink which is able to store or emit data, of the functional device exposed or made available on the first peripheral device;

230. *See* claim 1, § IX.B.2.f above.

g) transmitting data from the base unit and receiving the data at the first peripheral device over the communications network from the functional device to the processing device via the at least one fixed or configurable endpoint using the generic communications protocol for communication between the processing device and the first peripheral device,

231. *See* claim 1, § IX.B.2.g above.

h) further comprising hosting a unified communication between two or more processing devices on the processing device.

232. *See* claim 1, § IX.B.2.h above.

11. Claim 10

a) The method of claim 9 wherein the functional device provides any one or more of a microphone, a speakerphone, a speaker, a display, a touchscreen, a projector, a camera, a video camera, a webcamera.

233. *See* claim 2, § IX.B.3 above.

12. Claim 11

a) The method of claim 9 further comprising presenting the at least one fixed or a configurable endpoint of the functional device exposed on the first peripheral device as one of a human interface device, a mass storage device, a composite device, a microphone, a speakerphone, a speaker, a display, a touchscreen, a projector, a camera, a video camera, or a webcamera.

234. *See* claim 3, § IX.B.4 above.

13. Claim 12

a) The method of claim 9 further comprising encoding, and/or optionally encrypting the data.

235. *See* claim 4, § IX.B.5 above.

14. Claim 13

a) The method of claim 9 further comprising the first peripheral device presenting a functional device to the unified communication between two or more processing devices.

236. *See* claim 5, § IX.B.6 above.

15. Claim 14

a) The method of claim 9 comprising exposing the same type of functional device to the processing device as is connected to the Base unit and using at least one driver for the functional device installed on the processing device.

237. *See* claim 6, § IX.B.7 above.

16. Claim 15

a) A peripheral device adapted to be coupled to a processing device via a generic communications protocol,

238. *See* claim 1, § IX.B.2.c above.

b) the peripheral device having a receiver

239. *See* claim 1, § IX.B.2.e above.

c) and at least one fixed or a configurable endpoint, where the at least one fixed or a configurable endpoint is a data source or a data sink which is able to store or emit data, of a functional device exposed or made available on the first peripheral device;

240. *See* claim 1, § IX.B.2.f above.

d) the receiver of the first peripheral device being adapted to receive data over the communications network from the functional device and for sending the data to the processing device via the at least one fixed or configurable endpoint using the generic communications protocol for communication between the processing device and the peripheral device,

241. *See* claim 1, § IX.B.2.g above.

e) wherein the peripheral device is configured to present the processing device to host a unified communication between two or more processing devices.

242. *See* claim 1, § IX.B.2.h above.

17. Claim 16

a) The peripheral device of claim 15 wherein the at least one fixed or a configurable endpoint of the functional device exposed on the first peripheral device is one of a human interface device, a mass storage device, a composite device, a microphone, a speakerphone, a speaker, a display, a touchscreen, a projector, a camera, a video camera, or a webcamera.

243. *See* claim 3, § IX.B.4 above

18. Claim 17

a) A computer program product comprising a non-transitory signal storage means for storing computer program instructions that, when executed on a processor, carry out any of the methods steps of claim 9.

244. *See* claim 9, § IX.B.10 above. In my view, the combination of Van de Laar and Kaplan disclose this limitation. For example, Kaplan also discloses a

"computer program product comprising a non-transitory signal storage means for storing computer program instructions that, when executed on a processor, carry out…methods steps":

> Various embodiments of the invention may be implemented as a program product for use with a computer system. The program(s) of the program product define functions of the embodiments (including the methods described herein) and can be contained on a variety of computer-read able storage media. Illustrative computer-readable storage media include, but are not limited to: (i) non-writable storage media (*e.g.*, read-only memory devices within a computer such as CD-ROM disks readable by a CD-ROM drive, flash memory, ROM chips or any type of solid-state non-volatile semiconductor memory) on which information is permanently stored; and (ii) writable storage media (*e.g.*, floppy disks within a diskette drive or hard-disk drive or any type of solid-state random-access semiconductor memory) on which alterable information is stored.
>
> Ex-1008, ¶64.

245. Moreover, Van De Laar also discloses,

> For this purpose, according to a further aspect of the invention, the computer program product as described in the opening paragraph comprises a program that is operative to cause a processor to perform any one of the methods as described above.
>
> Ex-1007, ¶51.

19. Claim 18

a) The peripheral device of claim 15 wherein the at least one fixed or configurable endpoint has one transfer direction.

246. *See* claim 1, § IX.B.2.g above (regarding "bidirectional communication"). In my view, the combination of Van de Laar and Kaplan disclose this limitation. Since bidirectional communication is possible, the endpoint has at least one transfer *direction*, and to the extent that the claim requires only unidirectional data transfer, a POSA would understand that Kaplan's microphones only transmit data while speakers and displays only receive data. Ex-1008, ¶39; *see also* Ex-1007, ¶¶55, 96, 103.

247. Further, the USB specification states that for each endpoint, it is configured as an "IN" or "OUT" endpoint, determined whether data flows into or out of the endpoint. A USB pipe associates an endpoint on a device to its software on the host. Further, "[s]tream pipes deliver data" and that "[d]ata flows in at one end of a stream pipe and out the other end in the same order. Stream pipes are always uni-directional in their communication flow." Universal Serial Bus Specification, Revision 2.0, pg. 33-35 (April 27, 2000) (last accessed Jan. 15, 2025) (http://www.poweredusb.org/pdf/usb20.pdf).

X. CONCLUSION

248. My opinions are based upon the information that I have considered to date. I am unaware of any evidence of secondary considerations with respect to the

’972 patent that would render any of the asserted claims non-obvious. I reserve the right, however, to supplement my opinions in the future to respond to any arguments raised by the owner of the ’972 patent and to consider new information that becomes available to me.

249. I declare that all statements made herein of my knowledge are true, and that all statements made on information and belief are believed to be true, and that these statements were made with the knowledge that willful false statements and the like so made are punishable by fine or imprisonment, or both, under Section 1001 of Title 18 of the United States Code.

By: Kevin C Almeroth
Kevin C. Almeroth, Ph.D.

Date: January 17, 2025