QSFP-DD MSA

QSFP-DD Hardware Specification

for

QSFP DOUBLE DENSITY 8X PLUGGABLE TRANSCEIVER

Rev 5.0 July 9, 2019

Abstract: This specification defines: the electrical and optical connectors, electrical signals and power supplies, mechanical and thermal requirements of the pluggable QSFP Double Density (QSFP-DD) module, connector and cage system. This document provides a common specification for systems manufacturers, system integrators, and suppliers of modules.

POINTS OF CONTACT:

Tom Palkert
Technical Editor
Molex
2222 Wellington Court
Lisle, IL 60532-1682
Ph: 952-200-8542
tom.palkert at molex.com

Mark Nowell
Co-Chair
Cisco
170 West Tasman Dr
San Jose, CA 95134
Ph: 613-254-3391
mnowell at cisco.com

Scott Sommers
Co-Chair
Molex
2222 Wellington Court
Lisle, IL 60532-1682
Ph: 630-527-4317
scott.sommers at molex.com

www.qsfp-dd.com

Limitation on use of Information:
This specification is provided "**AS IS**" with **NO WARRANTIES** whatsoever and therefore the provision of this specification does not include any warranty of merchantability, noninfringement, fitness for a particular purpose, or any other warranty otherwise arising out of any proposal, specification or sample. The authors further disclaim all liability, including liability for infringement of any proprietary rights, relating to use of information in this specification. No license, express or implied, by estoppel or otherwise, to any intellectual property rights is granted herein.

Permissions:
You are authorized to download, reproduce and distribute this document. All other rights are reserved. The provision of this document should not be construed as the granting of any right to practice, make, use or otherwise develop products that are based on the document. Any and all IP rights related to this document and the designs disclosed within, except for the rights expressly mentioned above, are reserved by the respective owners of those IP rights.

Dedication:
The members of the QSFP-DD MSA would like to acknowledge the contributions of Edmund Poh. He was an excellent engineer; his technical skills and collaborative attitude will be missed.

Amphenol Exhibit 1010
Amphenol v. Credo

The following are Promoter member companies of the QSFP-DD MSA.

Broadcom LTD
Cisco
Corning
Finisar
Foxconn Interconnect Technology
Huawei LTD
Intel
Juniper Networks
Lumentum
Luxtera
Mellanox
Molex LLC
Oclaro, Inc.
TE Connectivity

The following are contributing member companies of the QSFP-DD MSA.

Acacia
ACON
Alibaba Group
Amphenol
Applied Optoelectronics
Apresia
Celestica
Ciena
ColorChip
Credo
DellEMC
Delta Products
Dust Photonics
Eoptolink
Fourte
Fujitsu
Genesis Connected Solutions
H3C
Hisense Broadband
Hitachi Metals
Hewlett Packard Enterprise
InnoLight
Innovium
Inphi
Ixia
JPC
Kaiam
Leoni
Lorom Cable Connection
LuxshareICT
Macom
Marvell
MaxLinear
MultiLane
NeoPhotonics
Nokia
Panduit
PHY-SI

Ranovus
Samtec
Semtech
Senko
Sicoya
The Siemon Company
Skorpios
Source Photonics
Spectra7 Microsystems
Spirent
Sumitomo Electric
US Conec
Xilinx
Yamaichi

Change History:

Revision	Date	Changes
1.0	Sept 19 2016	First public release
2.0	March 13 2017	Second public release
3.0	Sept 19 2017	Third public release
4.0	Sept 18 2018	Fourth public release, Additions to thermal section 6, synchronous clocking section 4.4, Mechanical updates
5.0	July 9 2019	Added Module type 2A, module label drawings, changes to latch drawings, added ePPS pin, updated power supply testing, added BiDi optical port assignments, updated cage drawings

Foreword

The development work on this specification was done by the QSFP-DD MSA, an industry group. The membership of the committee since its formation in Feb 2016 has included a mix of companies which are leaders across the industry.

CONTENTS

1 Scope 7

1.1 Description of Sections *7*

2 References 7

2.1 Industry Documents *7*

2.2 Sources *8*

3 Introduction 8

3.1 Objectives *8*

3.2 Applications *9*

4 Electrical Specification 9

4.1 Electrical Connector *9*
4.1.1 Low Speed Electrical Hardware Signals 17
4.1.2 Low Speed Electrical Specification 18
4.1.3 Timing for soft control and status functions 19
4.1.4 High Speed Electrical Specification 21

4.2 Power Requirements *22*
4.2.1 Power Classes and Maximum Power Consumption 22
4.2.2 Module Power Supply Specification 23
4.2.3 Host Board Power Supply Noise Output 24
4.2.4 Module Power Supply Noise Output 25
4.2.5 Module Power Supply Noise Tolerance 25

4.3 ESD *27*

4.4 Clocking Considerations *27*
4.4.1 Data Path Description 27
4.4.2 Tx Clocking Considerations 27
4.4.3 Rx Clocking Considerations 27

5 Mechanical and Board Definition 28

5.1 Introduction *28*

5.2 Datums, Dimensions and Component Alignment *30*

5.3 Module Mechanical Dimensions *32*

5.4 Module Flatness and Roughness *41*

5.5 Module paddle card dimensions *42*

5.6 Module Extraction and Retention Forces *45*

5.7 2x1 Electrical Connector Mechanical *46*
5.7.1 2x1 Connector and Cage host PCB layout 50

5.8 Surface Mount Electrical Connector Mechanical *53*
5.8.1 Surface mount connector and cage host PCB layout 60

5.9 Module Color Coding and Labeling *62*

5.10 Optical Interface *63*
5.10.1 MPO Optical Cable connections 65
5.10.2 Dual LC Optical Cable connection 67
5.10.3 Dual CS Optical Cable connection 67
5.10.4 SN Optical Cable connections 68
5.10.5 MDC Optical Cable connection 68
5.10.6 Electrical data input/output to optical port mapping 69

6 Environmental and Thermal 70

6.1 Thermal Requirements *70*

6.2 Thermal Requirements – tighter controlled environments *70*

6.3 External Case and Handle Touch Temperature *70*

7 Management Interface 71

7.1 SCL, SDA and ModSEL Timing Specification *71*

7.1.1 Introduction 71

7.1.2 Management Interface Timing Specification 71

7.1.3 Serial Interface Protocol 72

Appendix A Informative overall module length with elastomeric handle 75

Appendix B Module Type 2A Heat Sink Examples 76

Table 1- Pad Function Definition 12
Table 2- Low Speed Control and Sense Signals 18
Table 3- Timing for QSFP-DD soft control and status functions 19
Table 4- I/O Timing for Squelch & Disable 20
Table 5- Power Classes 22
Table 6- Truncated Filter Response Coefficients for Host Power Supply Noise Output 24
Table 7- Power Supply specifications, Instantaneous, sustained and steady state current limits 26
Table 8- Datums 30
Table 9- Module flatness specifications 41
Table 10- Insertion, Extraction and Retention Forces 45
Table 11- Electrical Signal to Optical Port Mapping 69
Table 12- Temperature Range Class of operation 70
Table 13- Temperature Range Classes for Tighter Controlled Applications 70
Table 14- Management Interface timing parameters 74

Figure 1: Application Reference Model..... 9
Figure 2: Module pad layout..... 11
Figure 3: Example QSFP-DD Host Board Schematic For Optical Modules..... 14
Figure 4: Example QSFP-DD Host Board Schematic for active copper cables..... 15
Figure 5: Example QSFP-DD Host Board Schematic for passive copper cables..... 16
Figure 6: Recommended Host Board Power Supply Filtering..... 23
Figure 7: Instantaneous and sustained peak currents for Icc Host (see Fig. 6)..... 24
Figure 8: Truncated Transfer Response for Host Board Power Supply Noise Output measurement..... 25
Figure 9: 2x1 stacked cage and module..... 28
Figure 10: Press fit cage for surface mount (SMT) connector..... 29
Figure 11: Type 1 Pluggable module..... 29
Figure 12: Type 2 Pluggable module..... 29
Figure 13: 2X1 stacked connector/cage datum descriptions..... 31
Figure 14: Surface mount connector/cage datum descriptions..... 32
Figure 15: Type 1 Module..... 33
Figure 16: Type 2 Module..... 33
Figure 17: Type 2A Module..... 34
Figure 18: Drawing of module..... 37
Figure 19: Type 2A Module with Heat Sink..... 38
Figure 20: Detailed dimensions of module..... 40
Figure 21: Module paddle card dimensions..... 43
Figure 22: Module pad dimensions..... 44
Figure 23: Integrated connector in 2x1 stacked cage..... 46
Figure 24: 2x1 stacked cage..... 47
Figure 25: 2x1 stacked cage dimensions..... 48
Figure 26: Connector pins in 2x1 stacked cage as viewed from the front..... 49
Figure 27: 2x1 Bezel Opening..... 49
Figure 28: 2X1 host board connector contacts..... 50
Figure 29: 2X1 Host PCB Mechanical Layout..... 52
Figure 30: SMT connector in 1xn cage..... 53
Figure 31: SMT 1x1 Cage Design..... 57
Figure 32: SMT 1x1 Connector Design..... 58
Figure 33: SMT 1x1 bezel opening..... 59
Figure 34: SMT Host PCB Mechanical Layout..... 60
Figure 35: SMT Connector and Host PCB Pin Numbers..... 61
Figure 36: Optical Media Dependent Interface port assignments..... 64
Figure 37: MPO-12 Single Row optical patch cord and module receptacle..... 65
Figure 38: MPO-16 Single Row optical patchcord and module receptacle..... 66
Figure 39: MPO-12 Two Row optical patchcord and module receptacle..... 66
Figure 40: Dual LC optical patchcord and module receptacle..... 67
Figure 41: Dual CS connector module receptacle (in support of breakout applications)... 67
Figure 42: SN optical connector plug and four-port module receptacle..... 68
Figure 43: MDC optical connector plug and four-port module receptacle..... 68
Figure 44: QSFP-DD Timing Diagram..... 72
Figure 45: SDA/SCL options for pull-up resistor, bus capacitance and rise/fall times... 73
Figure 46: Informative overall module length with handle for Type 1 module..... 75
Figure 47: Informative overall module length with handle for Type 2 and Type 2A modules 75

QSFP-DD 8X Pluggable Transceiver

1 Scope

The scope of this specification is the definition of a high density 8-channel (8x) module, cage and connector system. QSFP-DD supports up to 400 Gb/s in aggregate over an 8 x 50 Gb/s electrical interface. The cage and connector design provides backwards compatibility to QSFP28 modules which can be inserted into a QSFP-DD port and connected to 4 of the 8 electrical channels.

1.1 Description of Sections

Section 1 Scope and Purpose

Section 2 Referenced and Related Standards and SFF Specifications

Section 3 Introduction

Section 4 Electrical specifications

Section 5 Mechanical specifications and printed circuit board recommendations

Section 6 Environmental and thermal considerations

Section 7 Management Interface

2 References

2.1 Industry Documents

The following documents are relevant to this Specification:

- GR-253-CORE
- IEEE Std 802.3™-2018
- IEEE Std 802.3cd
- InfiniBand Architecture Specifications
- FC-PI-6p
- FC-PI-7
- ANSI/TIA-568.3
- TIA-604-5 (FOCIS 5)
- TIA-604-10 (FOCIS 10)
- TIA-604-18 (FOCIS 18)
- IEC 61754-7-1
- ANSI/ESDA/JDEC JS001
- EN6100-4-2
- Common Management Interface Specification (CMIS)
- GR63 Section 4.1.7 (Touch Temperature Reference)
- UL 60950-1 Section 4.5.4 (Touch Temperature Reference)
- IEC 31300-3-35
- EIA-964 Specification for QSFP+ 10 Gb/s Pluggable Transceiver
- Keysight Application Brief 5991-2778EN: Methods for characterizing and tuning DC inrush current

SFF Specifications

- SFF-8636 Management Interface for Cabled Environments
- SFF-8472 Diagnostic Monitoring Interface for Optical Transceivers
- SFF-8661 QSFP+ 4X Pluggable Module
- SFF-8679 QSFP28 4X Base Electrical Specification

CS optical connector specification

- CS-01242017 Revision 1.0 (Can be found at www.QSFP-DD.com)

2.2 Sources

This document can be obtained via the www.QSFP-DD.com web site.

3 Introduction

This Specification covers the following items:

a) Electrical interfaces including pad assignments for data, control, status and power supplies and host PCB layout requirements.

b) Optical interfaces (including optical receptacles and mating fiber plugs for multimode and single-mode duplex and parallel fiber applications). Breakout cable applications are also specified. Optical signaling specifications are not included in this document but are defined in the applicable industry standards.

c) Mechanical specifications including dimensions and tolerances for the connector, cage and module system. Includes details of the requirements for correct mating of the module and host sides of the connector.

d) Thermal requirements

e) Electrostatic discharge (ESD) requirements by reference to industry standard limits and test methods.

This Specification does not cover the following items:

a) Electromagnetic interference (EMI) protection. EMI protection is the responsibility of the implementers of the cages and modules.

b) Memory map definition, which can be found in the 'Common Management Interface Specification for 8x/16x pluggable transceivers' (see www.QSFP-DD.com).

3.1 Objectives

Electrical signal contact and channel assignments, electrical and power requirements defined in Section 4 and optical lane assignments defined in Section 5 ensure that the pluggable modules and cable assemblies are functionally interchangeable. Dimensions, mounting and insertion requirements defined in Section 5 for the bezel, optical module, cable plug, cage and connector system on a circuit board ensure that these products are mechanically interchangeable.

3.2 Applications

This specification defines a common solution for combined eight-channel ports that support Ethernet and/or InfiniBand and/or Fibre Channel requirements. The QSFP-DD interface can support pluggable modules or direct attach cables based on multimode fiber, single mode fiber or copper wires.
An application reference Model, shown in Figure 1, shows the high-speed data interface between an ASIC and the QSFP-DD module.

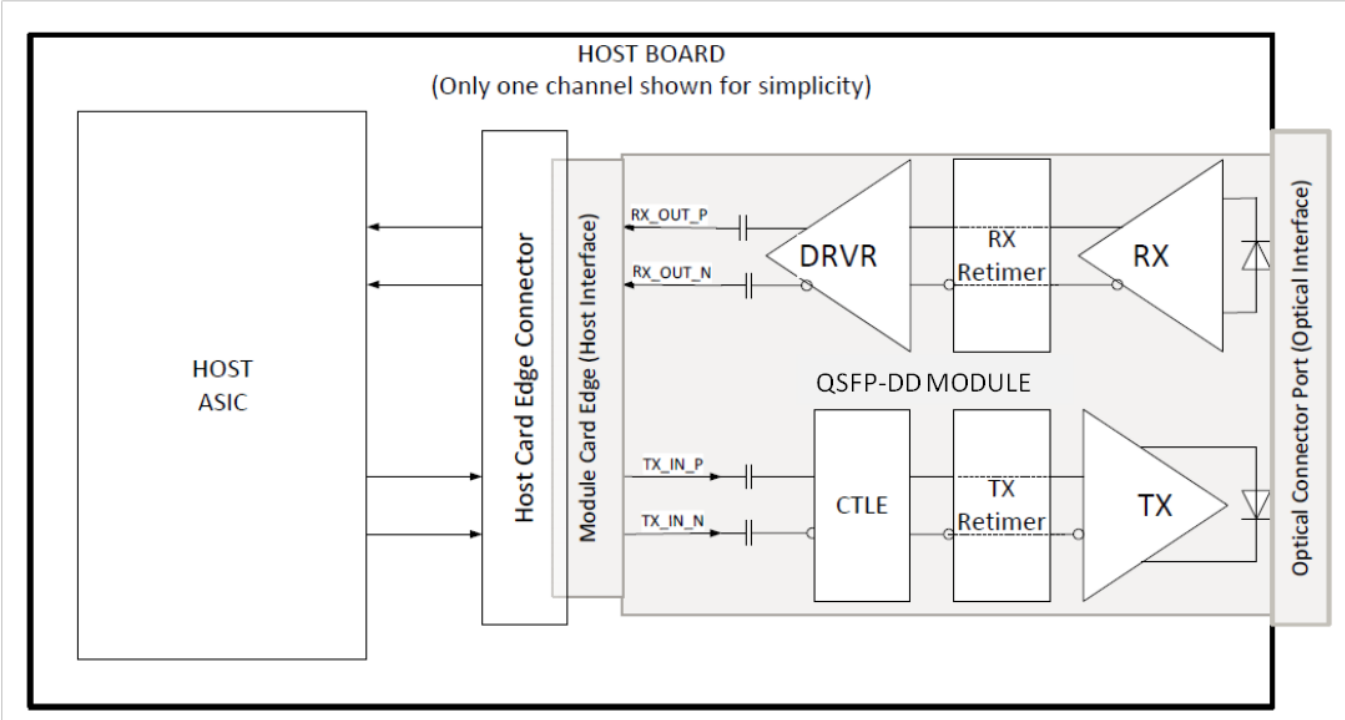

Figure 1: Application Reference Model

Note: For high speed electrical signals the compliance board methodology of IEEE and OIF should be used. Measurements taken with QSFP-DD compliance boards should be corrected for any difference between the loss of these compliance boards and the loss of the compliance boards specified in the standard.

4 Electrical Specification

This section contains signal definitions and requirements that are specific to the QSFP-DD module. High-speed signal requirements including compliance points for electrical measurements are defined in the applicable industry standard.

4.1 Electrical Connector

The QSFP-DD module edge connector consists of a single paddle card with 38 pads on the top and 38 pads on the bottom of the paddle card for a total of 76 pads. The pads are defined in such a manner so as to accommodate insertion of a QSFP module into a QSFP-DD receptacle. The legacy signal locations are deeper on the paddlecard, so that legacy QSFP module pads only connect to the longer row of connector pins, leaving the short row of connector pins unconnected in a QSFP application.

The pads are designed for a sequenced mating:

First mate – ground pads
Second mate – power pads
Third mate – signal pads

Because the QSFP-DD module has 2 rows of pads, the additional QSFP-DD pads will have an intermittent connection with the legacy QSFP pins in the connector during the module insertion and removal. The 'legacy' QSFP pads have a 'B' label shown in Table 1 to designate them as the second row of module pads to contact the QSFP-DD connector. The additional QSFP-DD pads have an 'A' label in Table 1 to designate them as the first row of module pads to contact the QSFP-DD connector. The additional QSFP-DD pads have first, second and third mate to the connector pins for both insertion and removal. Each of the first, second and third mate connections of the legacy QSFP pads and the respective additional QSFP-DD pads are simultaneous.

Figure 2 shows the signal symbols and pad numbering for the QSFP-DD module edge connector. The diagram shows the module PCB edge as a top and bottom view. There are 76 pads intended for high speed signals, low speed signals, power and ground connections.

Table 1 provides more information about each of the 76 pads. Figure 21 and Figure 22 show pad dimensions. The connector can be integrated into a 2x1 stacked configuration with 2 ports as illustrated in Figure 9 or a surface mount configuration as shown in Figure 10.

For EMI protection the signals from the host connector should be shut off when the QSFP-DD module is not present. Standard board layout practices such as connections to Vcc and GND with vias, use of short and equal-length differential signal lines are recommended. The chassis ground (case common) of the QSFP-DD module should be isolated from the module’s circuit ground, GND, to provide the equipment designer flexibility regarding connections between external electromagnetic interference shields and circuit ground, GND, of the module.

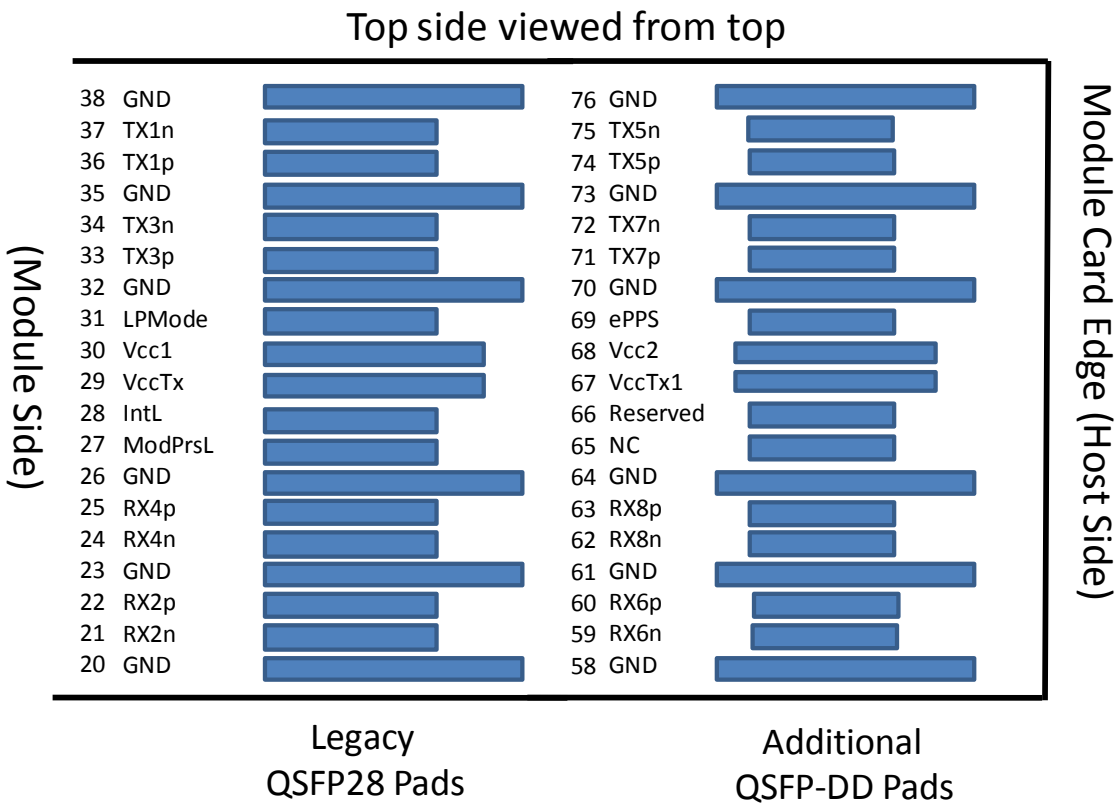

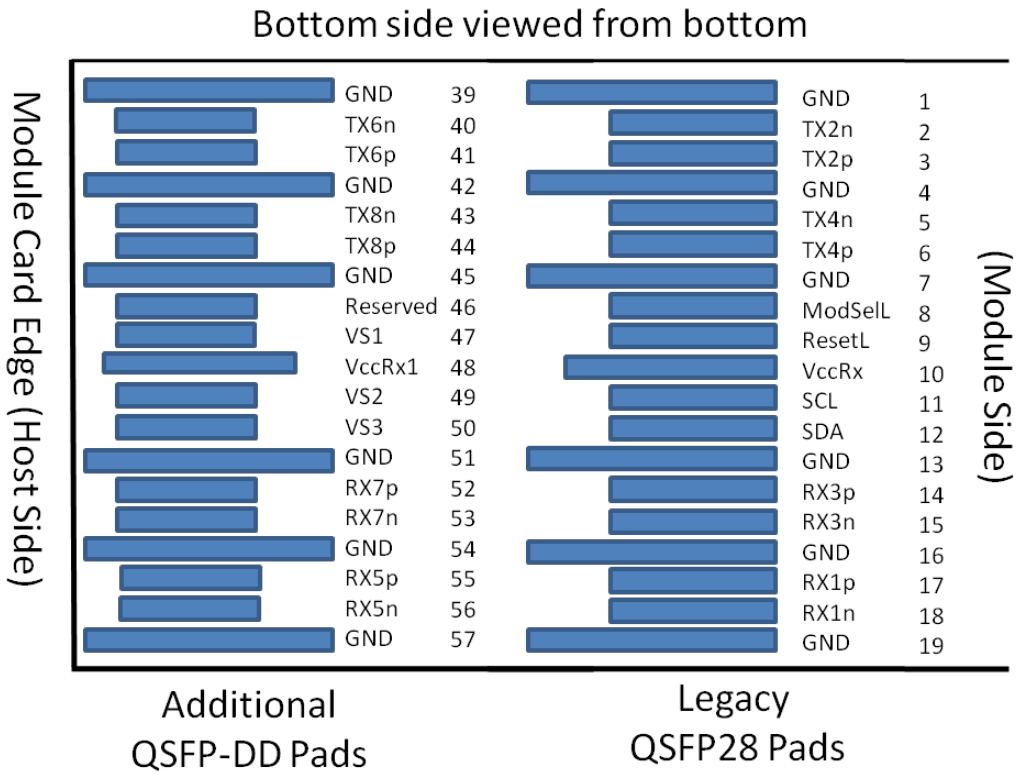

Figure 2: Module pad layout

Table 1- Pad Function Definition

Pad	Logic	Symbol	Description	Plug Sequence[4]	Notes
1		GND	Ground	1B	1
2	CML-I	Tx2n	Transmitter Inverted Data Input	3B	
3	CML-I	Tx2p	Transmitter Non-Inverted Data Input	3B	
4		GND	Ground	1B	1
5	CML-I	Tx4n	Transmitter Inverted Data Input	3B	
6	CML-I	Tx4p	Transmitter Non-Inverted Data Input	3B	
7		GND	Ground	1B	1
8	LVTTL-I	ModSelL	Module Select	3B	
9	LVTTL-I	ResetL	Module Reset	3B	
10		VccRx	+3.3V Power Supply Receiver	2B	2
11	LVCMOS-I/O	SCL	2-wire serial interface clock	3B	
12	LVCMOS-I/O	SDA	2-wire serial interface data	3B	
13		GND	Ground	1B	1
14	CML-O	Rx3p	Receiver Non-Inverted Data Output	3B	
15	CML-O	Rx3n	Receiver Inverted Data Output	3B	
16		GND	Ground	1B	1
17	CML-O	Rx1p	Receiver Non-Inverted Data Output	3B	
18	CML-O	Rx1n	Receiver Inverted Data Output	3B	
19		GND	Ground	1B	1
20		GND	Ground	1B	1
21	CML-O	Rx2n	Receiver Inverted Data Output	3B	
22	CML-O	Rx2p	Receiver Non-Inverted Data Output	3B	
23		GND	Ground	1B	1
24	CML-O	Rx4n	Receiver Inverted Data Output	3B	
25	CML-O	Rx4p	Receiver Non-Inverted Data Output	3B	
26		GND	Ground	1B	1
27	LVTTL-O	ModPrsL	Module Present	3B	
28	LVTTL-O	IntL	Interrupt	3B	
29		VccTx	+3.3V Power supply transmitter	2B	2
30		Vcc1	+3.3V Power supply	2B	2
31	LVTTL-I	LPMode	Low Power mode;	3B	
32		GND	Ground	1B	1
33	CML-I	Tx3p	Transmitter Non-Inverted Data Input	3B	
34	CML-I	Tx3n	Transmitter Inverted Data Input	3B	
35		GND	Ground	1B	1
36	CML-I	Tx1p	Transmitter Non-Inverted Data Input	3B	
37	CML-I	Tx1n	Transmitter Inverted Data Input	3B	
38		GND	Ground	1B	1

Pad	Logic	Symbol	Description	Plug Sequence[4]	Notes
39		GND	Ground	1A	1
40	CML-I	Tx6n	Transmitter Inverted Data Input	3A	
41	CML-I	Tx6p	Transmitter Non-Inverted Data Input	3A	
42		GND	Ground	1A	1
43	CML-I	Tx8n	Transmitter Inverted Data Input	3A	
44	CML-I	Tx8p	Transmitter Non-Inverted Data Input	3A	
45		GND	Ground	1A	1
46		Reserved	For future use	3A	3
47		VS1	Module Vendor Specific 1	3A	3
48		VccRx1	3.3V Power Supply	2A	2
49		VS2	Module Vendor Specific 2	3A	3
50		VS3	Module Vendor Specific 3	3A	3
51		GND	Ground	1A	1
52	CML-O	Rx7p	Receiver Non-Inverted Data Output	3A	
53	CML-O	Rx7n	Receiver Inverted Data Output	3A	
54		GND	Ground	1A	1
55	CML-O	Rx5p	Receiver Non-Inverted Data Output	3A	
56	CML-O	Rx5n	Receiver Inverted Data Output	3A	
57		GND	Ground	1A	1
58		GND	Ground	1A	1
59	CML-O	Rx6n	Receiver Inverted Data Output	3A	
60	CML-O	Rx6p	Receiver Non-Inverted Data Output	3A	
61		GND	Ground	1A	1
62	CML-O	Rx8n	Receiver Inverted Data Output	3A	
63	CML-O	Rx8p	Receiver Non-Inverted Data Output	3A	
64		GND	Ground	1A	1
65		NC	No Connect	3A	3
66		Reserved	For future use	3A	3
67		VccTx1	3.3V Power Supply	2A	2
68		Vcc2	3.3V Power Supply	2A	2
69	LVTTL-I	ePPS	Precision Time Protocol (PTP) reference clock input	3A	3
70		GND	Ground	1A	1
71	CML-I	Tx7p	Transmitter Non-Inverted Data Input	3A	
72	CML-I	Tx7n	Transmitter Inverted Data Input	3A	
73		GND	Ground	1A	1
74	CML-I	Tx5p	Transmitter Non-Inverted Data Input	3A	
75	CML-I	Tx5n	Transmitter Inverted Data Input	3A	
76		GND	Ground	1A	1

Note 1: QSFP-DD uses common ground (GND)for all signals and supply (power). All are common within the QSFP-DD module and all module voltages are referenced to this potential unless otherwise noted. Connect these directly to the host board signal-common ground plane.

Note 2: VccRx, VccRx1, Vcc1, Vcc2, VccTx and VccTx1 shall be applied concurrently. Requirements defined for the host side of the Host Card Edge Connector are listed in Table 7. VccRx, VccRx1, Vcc1, Vcc2, VccTx and VccTx1 may be internally connected within the module in any combination. The connector Vcc pins are each rated for a maximum current of 1000 mA.

Note 3: All Vendor Specific, Reserved, No Connect and ePPS (if not used) pins may be terminated with 50 Ohms to ground on the host. Pad 65 (No Connect) shall be left unconnected within the module. Vendor specific and Reserved pads shall have an impedance to GND that is greater than 10 kOhms and less than 100 pF.

Note 4: Plug Sequence specifies the mating sequence of the host connector and module. The sequence is 1A, 2A, 3A, 1B, 2B, 3B. (see Figure 2 for pad locations) Contact sequence A will make, then break contact with additional QSFP-DD pads. Sequence 1A,1B will then occur simultaneously, followed by 2A,2B,followed by 3A,3B.

Figure 3, Figure 4 and Figure 5 show examples of QSFP-DD host PCB schematics with connections to CDR and control ICs. An 8 wide electrical/optical interface is shown. Note alternate electrical/optical interfaces are supported using optical multiplexing (WDM) or electrical multiplexing.

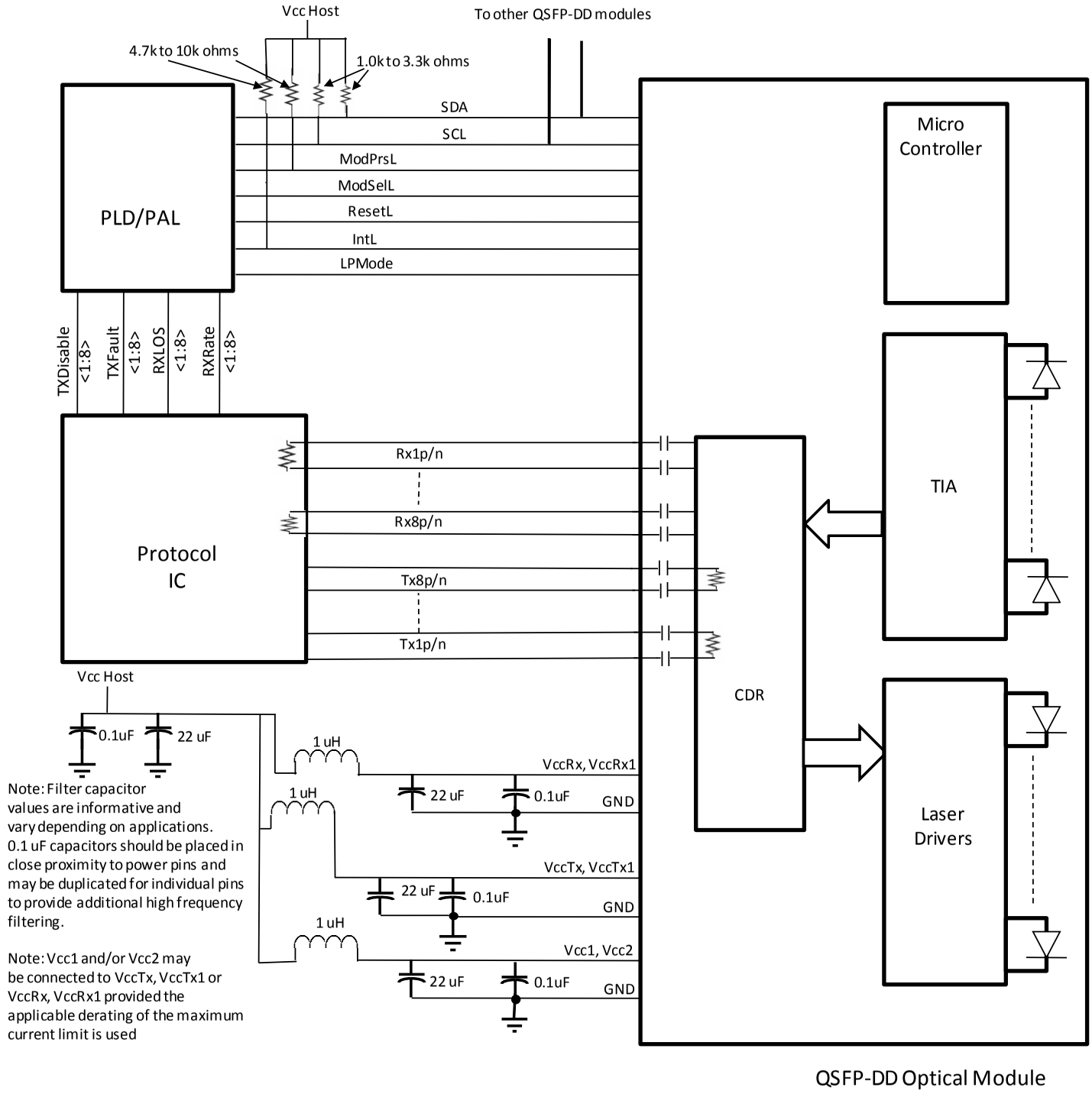

Figure 3: Example QSFP-DD Host Board Schematic For Optical Modules

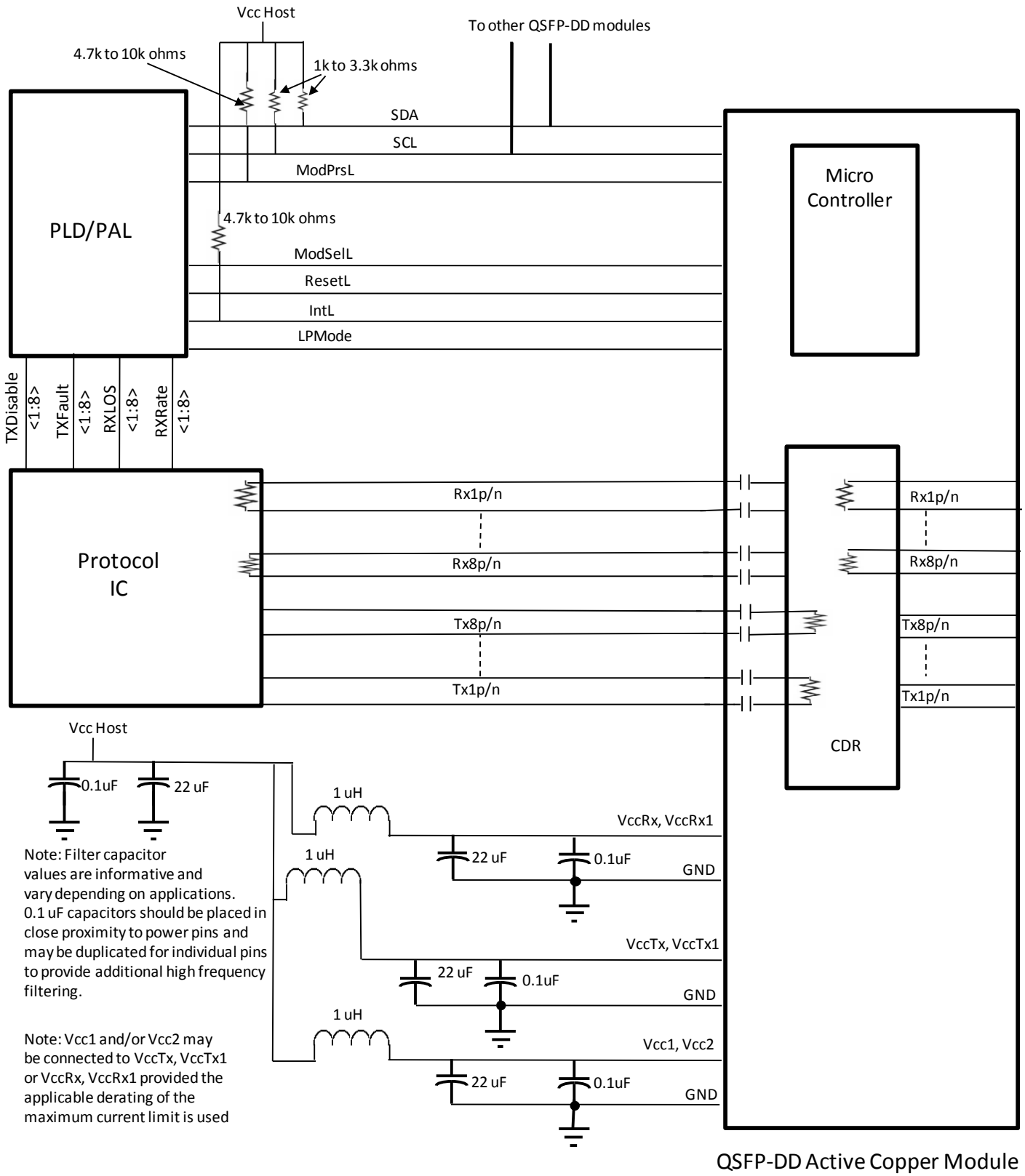

Figure 4: Example QSFP-DD Host Board Schematic for active copper cables

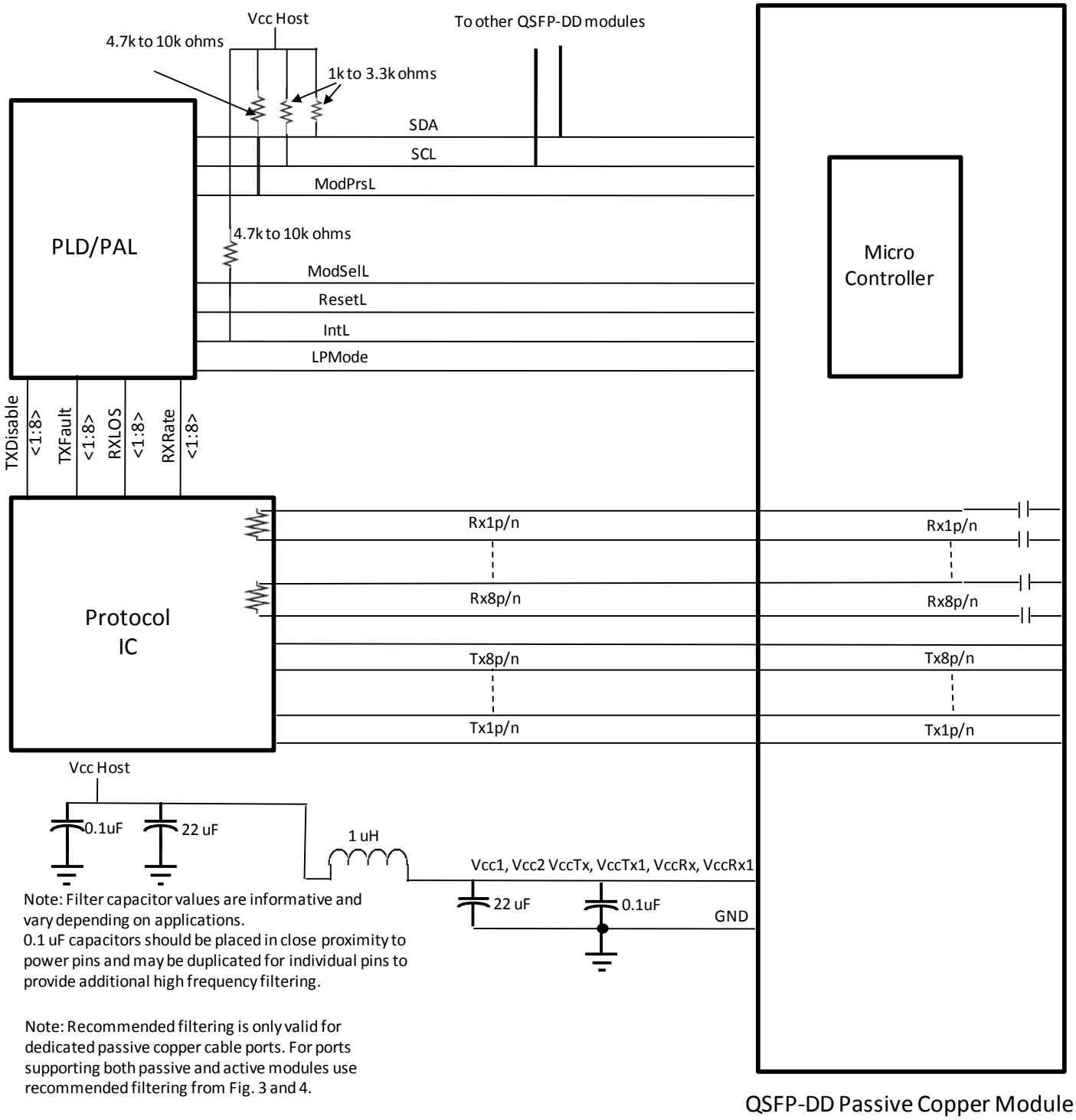

Figure 5: Example QSFP-DD Host Board Schematic for passive copper cables

4.1.1 Low Speed Electrical Hardware Signals

In addition to the 2-wire serial interface the module has the following low speed signals for control and status:

ModSelL
ResetL
LPMode
ModPrsL
IntL
ePPS

4.1.1.1 ModSelL

The ModSelL is an input signal that shall be pulled to Vcc in the QSFP-DD module (see Table 2). When held low by the host, the module responds to 2-wire serial communication commands. The ModSelL allows the use of multiple QSFP-DD modules on a single 2-wire interface bus. When ModSelL is “High”, the module shall not respond to or acknowledge any 2-wire interface communication from the host.

In order to avoid conflicts, the host system shall not attempt 2-wire interface communications within the ModSelL de-assert time after any QSFP-DD modules are deselected. Similarly, the host must wait at least for the period of the ModSelL assert time before communicating with the newly selected module. The assertion and de-asserting periods of different modules may overlap as long as the above timing requirements are met.

4.1.1.2 ResetL

The ResetL signal shall be pulled to Vcc in the module (see Table 2). A low level on the ResetL signal for longer than the minimum pulse length (t_Reset_init) (See Table 3) initiates a complete module reset, returning all user module settings to their default state.

4.1.1.3 LPMode

LPMode is an input signal. The LPMode signal shall be pulled up to Vcc in the QSFP-DD module (see Table 2). LPMode is used in the control of the module power mode.
See CMIS Section 6.3.1.3.

4.1.1.4 ModPrsL

ModPrsL shall be pulled up to Vcc Host on the host board and pulled low in the module (see Table 2). The ModPrsL is asserted “Low” when the module is inserted. The ModPrsL is deasserted “High” when the module is physically absent from the host connector due to the pull-up resistor on the host board.

4.1.1.5 IntL

IntL is an output signal. The IntL signal is an open collector output and shall be pulled to Vcc Host on the host board (see Table 2). When the IntL signal is asserted Low it indicates a change in module state, a possible module operational fault or a status critical to the host system. The host identifies the source of the interrupt using the 2-wire serial interface. The IntL signal is deasserted “High” after all set interrupt flags are read.

4.1.1.6 ePPS PTP Reference Clock (Optional)

For high-performance Precision Time Protocol(PTP) applications, a PTP reference clock with Pulse Per Second modulation, (Enhanced Pulse Per Second (ePPS)) may be provided from the host to the module. This can be used for either offline delay characterization or

real-time delay compensation within the module. The clock is used to synchronize tightly the Host Time-of-Day counter to the module internal Time-of-Day Counter.

Editor’s Note – Full definition of ePPS is currently under development

4.1.2 Low Speed Electrical Specification

Low speed signaling other than the SCL and SDA interface is based on Low Voltage TTL (LVTTL) operating at Vcc. Vcc refers to the generic supply voltages of VccTx, VccRx, Vcc host or Vcc1. Hosts shall use a pull-up resistor connected to Vcc host on each of the 2-wire interface SCL (clock), SDA (data), and all low speed status outputs (see Table 2). The SCL and SDA is a hot plug interface that may support a bus topology. During module insertion or removal, the module may implement a pre-charge circuit which prevents corrupting data transfers from other modules that are already using the bus.

Note: Timing diagrams for SCL and SDA are shown in Section 7.
The QSFP-DD low speed electrical specifications are given in Table 2. This specification ensures compatibility between host bus masters and the 2-wire interface.

Table 2- Low Speed Control and Sense Signals

Parameter	Symbol	Min	Max	Unit	Condition
SCL and SDA	VOL	0	0.4	V	IOL(max)=3 mA for fast mode, 20 mA for Fast-mode plus
SCL and SDA	VIL	-0.3	Vcc*0.3	V	
	VIH	VCC*0.7	Vcc+0.5	V	
Capacitance for SCL and SDA I/O signal	Ci		14	pF	
Total bus capacitive load for SCL and SDA	Cb		100	pF	For 400 kHz clock rate use 3.0 k Ohms Pullup resistor, max. For 1000kHz clock rate refer to Figure 45
			200	pF	For 400kHz clock rate use 1.6 k Ohms pullup resistor, max. For 1000kHz clock rate refer to Figure 45.
LPMode, ResetL, ModSelL and ePPS	VIL	-0.3	0.8	V	
	VIH	2	VCC+0.3	V	
LPMode, ResetL and ModSelL	|Iin|		360	uA	0V<Vin<Vcc
ePPS	|Iin|		TBD	uA	0V<Vin<Vcc
IntL	VOL	0	0.4	V	IOL=2.0 mA
	VOH	VCC-0.5	VCC+0.3	V	10k Ohms pull-up to Host Vcc
ModPrsL	VOL	0	0.4	V	IOL=2.0 mA
	VOH				ModPrsL can be implemented as a short-circuit to GND on the module

4.1.3 Timing for soft control and status functions

Timing for QSFP-DD soft control and status functions are described in Table 3.

Table 3- Timing for QSFP-DD soft control and status functions

Parameter	Symbol	Min	Max	Unit	Conditions
MgmtInitDuration	Max MgmtInit Duration		2000	ms	Time from power on[1] , hot plug or rising edge of reset until completion of the MgmtInit State
ResetL Assert Time	t_reset_init	10		µs	Minimum pulse time on the ResetL signal to initiate a module reset.
IntL Assert Time	ton_IntL		200	ms	Time from occurrence of condition triggering IntL until Vout:IntL=Vol
IntL Deassert Time	toff_IntL		500	µs	Time from clear on read[2] operation of associated flag until Vout:IntL=Voh. This includes deassert times for Rx LOS, Tx Fault and other flag bits.
Rx LOS Assert Time	ton_los		100	ms	Time from Rx LOS condition present to Rx LOS bit set (value = 1b) and IntL asserted.
Rx LOS Assert Time (optional fast mode)	ton_losf		1	ms	Time from Rx LOS state to Rx LOS bit set (value = 1b) and IntL asserted.
Tx Fault Assert Time	ton_Txfault		200	ms	Time from Tx Fault state to Tx Fault bit set (value=1b) and IntL asserted.
Flag Assert Time	ton_flag		200	ms	Time from occurrence of condition triggering flag to associated flag bit set (value=1b) and IntL asserted.
Mask Assert Time	ton_mask		100	ms	Time from mask bit set (value=1b)[3] until associated IntL assertion is inhibited
Mask Deassert Time	toff_mask		100	ms	Time from mask bit cleared (value=0b)[3] until associated IntL operation resumes
Module Select Wait Time DataPathDeinit Max Duration DataPathInit Max Duration ModulePwrDn Max Duaration	ModSelL Wait Time DataPathDeinit _MaxDuration DataPathInit_ MaxDuration ModulePwrDn_ MaxDuration				See Common Management Interface Specification Table 8-28
Note 1. Power on is defined as the instant when supply voltages reach and remain at or above the minimum level specified in Table 7.					
Note 2. Measured from low to high SDA edge of the Stop condition of the read transaction					
Note 3. Measured from low to high SDA edge of the Stop condition of the write transaction					
Note 4. Rx LOS condition is defined at the optical input by the relevant standard					

Squelch and disable timings are defined in Table 4.

Table 4- I/O Timing for Squelch & Disable

Parameter	Symbol	Max	Unit	Conditions
Rx Squelch Assert Time	ton_Rxsq	15	ms	Time from loss of Rx input signal until the squelched output condition is reached. See Subsection 4.1.4.1.
Rx Squelch Deassert Time	toff_Rxsq	15	ms	Time from resumption of Rx input signals until normal Rx output condition is reached. See subsection 4.1.4.1.
Tx Squelch Assert Time	ton_Txsq	400	ms	Time from loss of Tx input signal until the squelched output condition is reached. See subsection 4.1.4.2.
Tx Squelch Deassert Time	toff_Txsq	400	ms	Time from resumption of Tx input signals until normal Tx output condition is reached. See subsection 4.1.4.2.
Tx Disable Assert Time	ton_txdis	100	ms	Time from the stop condition of the Tx Disable write sequence [1] until optical output falls below 10% of nominal
Tx Disable Assert Time (optional fast mode)	ton_txdisf	3	ms	Time from Tx Disable bit set (value = 1b)[1] until optical output falls below 10% of nominal
Tx Disable Deassert Time	toff_txdis	400	ms	Time from Tx Disable bit cleared (value = 0b)[1] until optical output rises above 90% of nominal
Tx Disable Deassert Time (optional fast mode)	toff_txdisf	10	ms	Time from Tx Disable bit cleared (value = 0b)[1] until optical output rises above 90% of nominal
Rx Output Disable Assert Time	ton_rxdis	100	ms	Time from Rx Output Disable bit set (value = 1b)[1] until Rx output falls below 10% of nominal
Rx Output Disable Deassert Time	toff_rxdis	100	ms	Time from Rx Output Disable bit cleared (value = 0b)[1] until Rx output rises above 90% of nominal
Squelch Disable Assert Time	ton_sqdis	100	ms	This applies to Rx and Tx Squelch and is the time from bit set (value = 0b)[1] until squelch functionality is disabled.
Squelch Disable Deassert Time	toff_sqdis	100	ms	This applies to Rx and Tx Squelch and is the time from bit cleared (value = 0b)[1] until squelch functionality is enabled
Note 1: Measured from LOW to HIGH SDA signal transition of the STOP condition of the write transaction				

4.1.4 High Speed Electrical Specification

For detailed electrical specifications see the appropriate specification, e.g. IEEE Std 802.3-2018 Annex 86A, Annex 120E or Annex 120C, FC-PI-6, FC-PI-7, OIF-CEI-28G-VSR, OIF-CEI-56G-VSR or the InfiniBand specification. Partial or complete squelch specifications may be provided in the appropriate specification. Where squelch is not fully defined by the appropriate specification, the recommendations of the following subsections 4.1.4.1 and 4.1.4.2 may be used.

4.1.4.1 Rx(n)(p/n)

Rx(n)(p/n) are QSFP-DD module receiver data outputs. Rx(n)(p/n) are AC-coupled 100 Ohm differential lines that should be terminated with 100 Ohm differentially at the Host ASIC(SerDes). The AC coupling is inside the QSFP-DD module and not required on the Host board. When properly terminated, the differential voltage swing shall be less than or equal to 900 mVpp or the relevant standard, whichever is less.

Output squelch for loss of optical input signal, hereafter Rx Squelch, is required and shall function as follows. In the event of the Rx input signal on any optical port becoming equal to or less than the level required to assert LOS, then the receiver output(s) associated with that Rx port shall be squelched. A single Rx optical port can be associated with more than one Rx output as shown in Section 5.10.6. In the squelched state output impedance levels are maintained while the differential voltage amplitude shall be less than 50 mVpp.

In normal operation the default case has Rx Squelch active. Rx Squelch can be deactivated using Rx Squelch Disable through the 2-wire serial interface. Rx Squelch Disable is an optional function.

4.1.4.2 Tx(n)(p/n)

Tx(n)(p/n) are QSFP-DD module transmitter data inputs. They are AC-coupled 100 Ohm differential lines with 100 Ohm differential terminations inside the QSFP-DD optical module. The AC coupling is implemented inside the QSFP-DD optical module and not required on the Host board.

Output squelch for loss of electrical signal, hereafter Tx Squelch, is an optional function. Where implemented it shall function as follows. In the event of the differential, peak-to-peak electrical signal amplitude on any electrical input channel becoming less than 70 mVpp, then the transmitter optical output associated with that electrical input channel shall be squelched and the associated TxLOS flag set. If multiple electrical input channels are associated with the same optical output channel, the loss of any of the incoming electrical input channels causes the optical output channel to be squelched.

For applications, e.g. Ethernet, where the transmitter off condition is defined in terms of average power, squelching by disabling the transmitter is recommended and for applications, e.g. InfiniBand, where the transmitter off condition is defined in terms of OMA, squelching the transmitter by setting the OMA to a low level is recommended.

In module operation, where Tx Squelch is implemented, the default case has Tx Squelch active. Tx Squelch can be deactivated using Tx Squelch Disable through the 2-wire serial interface. Tx Squelch and Tx Squelch Disable are optional functions.

4.2 Power Requirements

The power supply has six designated pins, VccTx, VccTx1, Vcc1, Vcc2, VccRx, VccRx1 in the connector. Vcc1 and Vcc2 are used to supplement VccTx, VccTx1, VccRx or VccRx1 at the discretion of the module vendor. Power is applied concurrently to these pins.

A host board together with the QSFP-DD module(s) forms an integrated power system. The host supplies stable power to the module. The module limits electrical noise coupled back into the host system and limits inrush charge/current during hot plug insertion.

All power supply requirements in Table 7 shall be met at the maximum power supply current. No power sequencing of the power supply is required of the host system since the module sequences the contacts in the order of ground, supply and signals during insertion.

4.2.1 Power Classes and Maximum Power Consumption

There are two power modes; Low Power Mode and High Power Mode, and eight power classes, Class 1 - Class 8. Module power modes are defined in Table 7 and power classes are defined in Table 5.

Since a wide range of module power classes exist, to avoid exceeding the system power supply limits and cooling capacity when a module is inserted into a system designed to accommodate only low power consumption modules, it is recommended that the host implement the state machine defined in the QSFP-DD Management Interface Specification and identify the power class of the module before allowing the module to go into high power mode.

Table 5- Power Classes

Power Class	Max Power (W)
1	1.5
2	3.5
3	7.0
4	8.0
5	10
6	12
7	14
8	>14

In general, the higher power classification levels are associated with higher data rates and longer reaches. The system designer is responsible for ensuring that the maximum case temperature does not exceed the case temperature requirements.

Host Board Power Supply Filtering. The specification of the host power supply filtering network is beyond the scope of this specification, particularly because of the wide range of module Power Classes. During power transient events, the host should ensure that that any neighboring modules sharing the same supply stay within their specified supply voltage limits. An example of host board power supply filtering is shown in Figure 6.

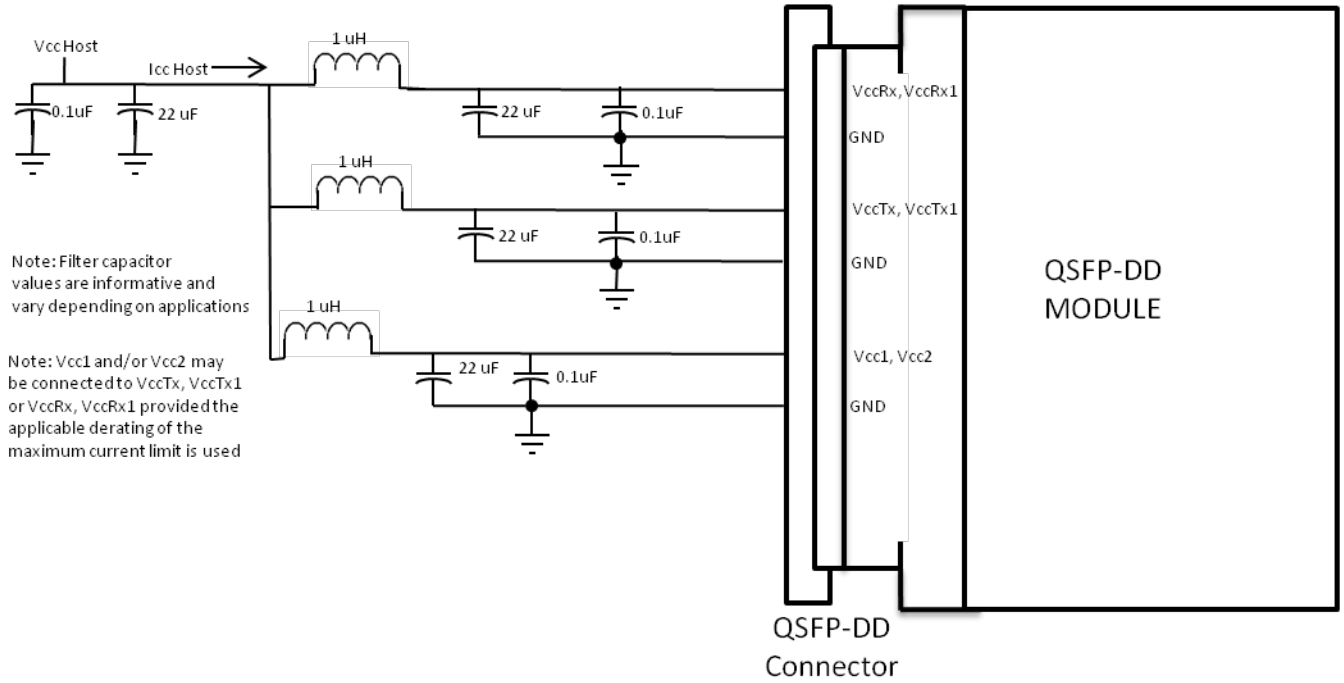

Figure 6: Recommended Host Board Power Supply Filtering

Any voltage drop across a filter network on the host is counted against the host DC set point accuracy specification. Inductors with DC Resistance of less than 0.1 Ohm should be used in order to maintain the required voltage at the Host Card Edge Connector. It is recommended that the 22 uF capacitors each have an equivalent series resistance of 0.22 Ohm.

The specifications for the power supply are shown in Table 7. The limits in Table 7 apply to the combined current that flows through all inductors in the power supply filter (represents ICC host in Figure 6). The test method for measuring inrush current can be found in SFF-8679. Keysight Technologies application brief 5991-2778EN provides useful guidance.

4.2.2 Module Power Supply Specification

In order to avoid exceeding the host system power capacity, upon hot-plug, power cycle or reset, all QSFP-DD modules shall power up in Low Power Mode if LPMode is asserted. If LPMode is not asserted the module will proceed to High Power Mode without host intervention. Figure 7 shows waveforms for maximum instantaneous, sustained and steady state currents for Low Power and High Power modes. Specification values for maximum instantaneous, sustained and steady state currents at each power class are given in Table 7.

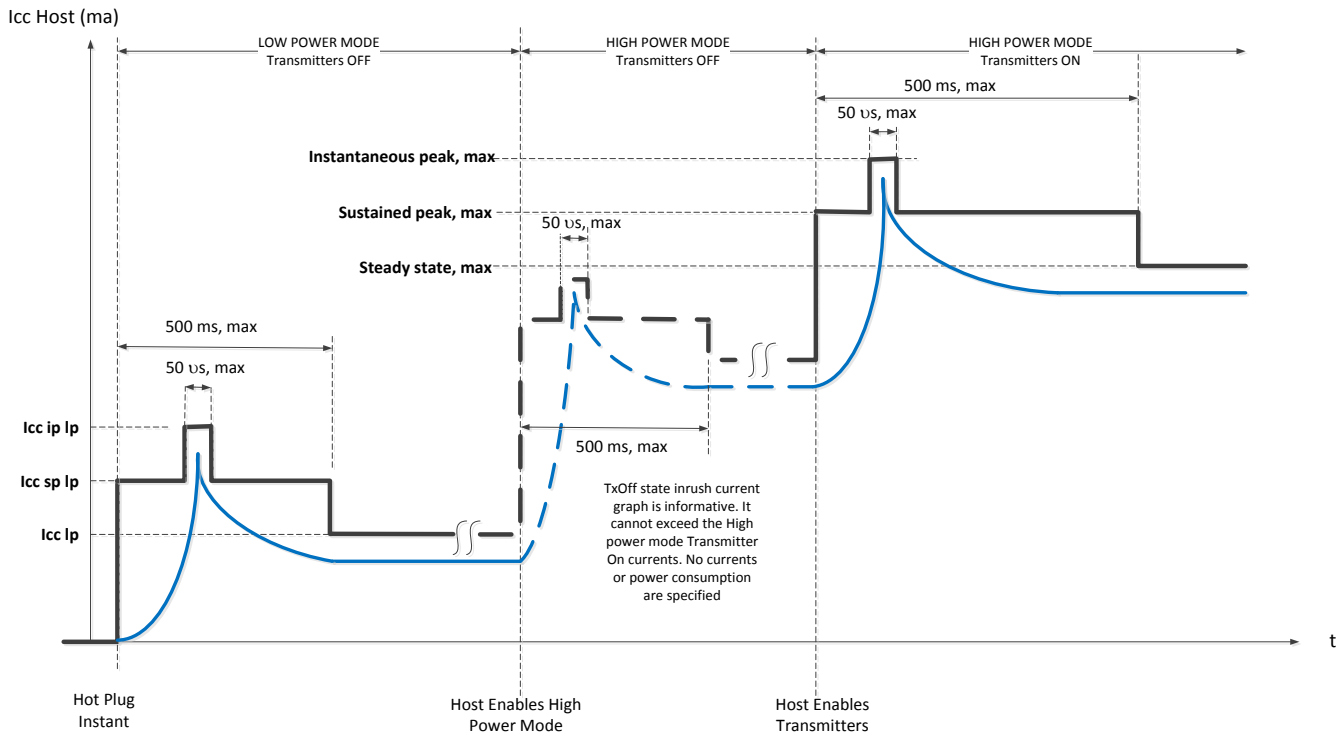

Figure 7: Instantaneous and sustained peak currents for Icc Host (see Fig. 6)

4.2.3 Host Board Power Supply Noise Output

The host shall generate an effective weighted integrated spectrum RMS noise less than the eN_Host value in Table 7 when tested by the methods of SFF-8431, section D.17.1 with the following exception: The truncated function equation with coefficients from Table 6. The frequency response of the truncated function is illustrated in Figure 8.

Table 6- Truncated Filter Response Coefficients for Host Power Supply Noise Output

Frequency	a	b	c	d	e
10 Hz ≤ f ≤ 240.2 Hz	0	0	0	0	-0.1
240.2 Hz ≤ f ≤ 24.03 kHz	0.3784	-3.6045	12.694	-19.556	11.002
24.03 kHz ≤ f ≤ 360.4 kHz	-22.67038	430.392	-3053.779	9574.26	-11175.98
360.4 kHz ≤ f ≤ 12.6 MHz	3.692166	-91.467	838.80	-3400.38	5139.285
12.6 MHz ≤ f ≤ 24 MHz	0	0	0	0	-60

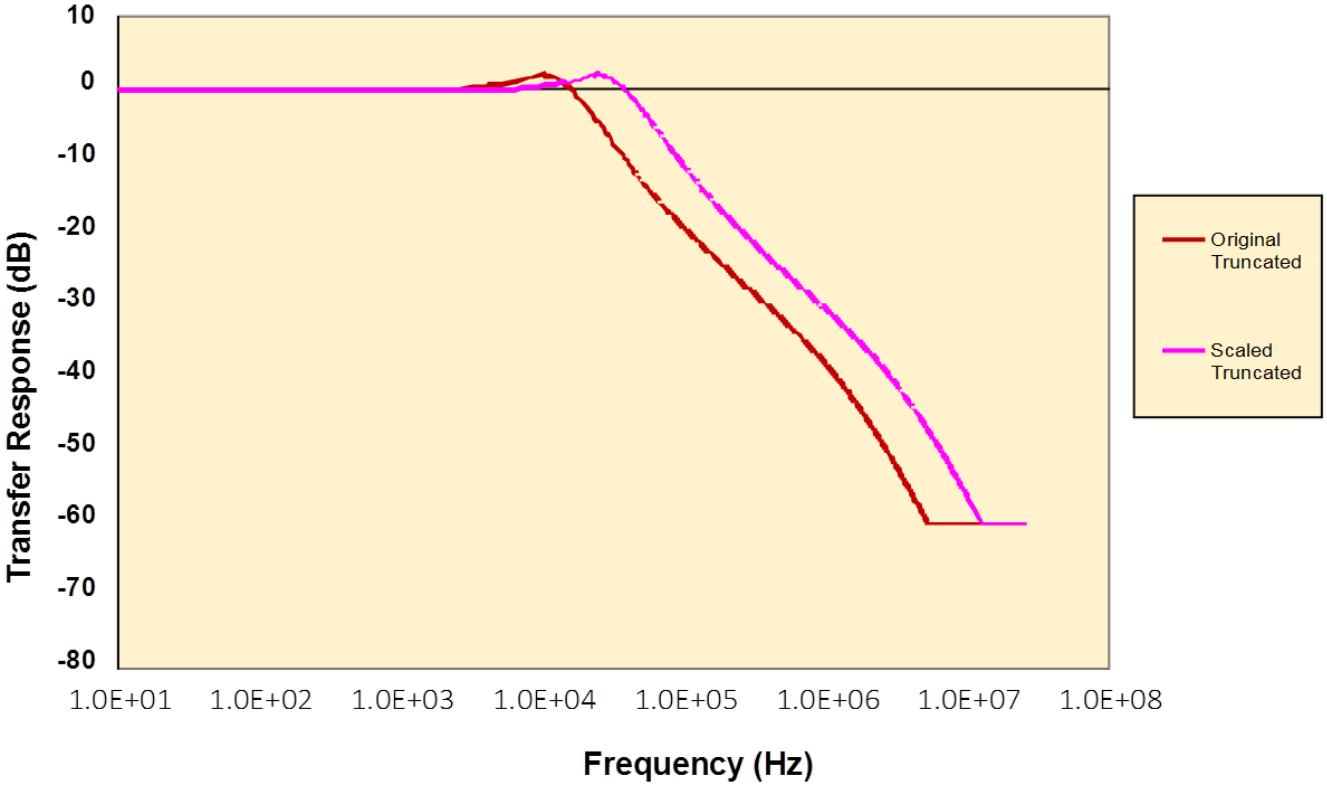

Figure 8: Truncated Transfer Response for Host Board Power Supply Noise Output measurement

4.2.4 Module Power Supply Noise Output

The QSFP-DD module shall generate less than the value in Table 7 when tested by the methods of SFF-8431, section D.17.2. Note: The series resistor specified in D.17 Figure 56 is reduced for high power modules by the following equation: R9series = 0.1*1.5/(Module Advertised Power Consumption (max)).

4.2.5 Module Power Supply Noise Tolerance

The QSFP-DD module shall meet all requirements and remain fully operational in the presence of a sinusoidal tolerance signal of amplitude given by Table 7, swept from 10 Hz to 10 MHz according to the methods of SFF-8431, section D.17.3 with the exception that 4.7uH in SFF-8431 Figure 58 is replaced with 1 uH and the ESR of the 22uF capacitor (0.5 Ohm) is replaced with 0.22 Ohm. This emulates the worst case noise output of the host.

Table 7- Power Supply specifications, Instantaneous, sustained and steady state current limits

Parameter	Symbol	Min	Nom	Max	Unit
Power supply voltages VccTx, VccTx1, VccRx, VccRx1, Vcc1 & Vcc2 including ripple, droop and noise below 100kHz[1]		3.135	3.3	3.465	V
Host RMS noise output 40 Hz-10 MHz				25	mV
Module RMS noise output 10 Hz - 10 MHz				30	mV
Module power supply noise tolerance 10 Hz - 10 MHz (peak-to-peak)	$PSNR_{mod}$			66	mV
Module inrush - instantaneous peak duration[2]	T_ip			50	µs
Module inrush - initialization time[2]	T_init			500	ms
Low Power Mode					
Power Consumption	P_lp			1.5	W
Instantaneous peak current at hot plug	Icc_ip_lp	-	-	600	mA
Sustained peak current at hot plug	Icc_sp_lp	-	-	495	mA
Steady state current	Icc_lp	See Note 3			mA
High Power Mode Power Class 1 module					
Power Consumption	P_1			1.5	W
Instantaneous peak current	Icc_ip_1	-	-	600	mA
Sustained peak current	Icc_sp_1	-	-	495	mA
Steady state current	Icc_1	See Note 3			mA
High Power Mode Power Class 2 module					
Power Consumption	P_2			3.5	W
Instantaneous peak current	Icc_ip_2	-	-	1400	mA
Sustained peak current	Icc_sp_2	-	-	1155	mA
Steady state current	Icc_2	See Note 3			mA
High Power Mode Power Class 3 module					
Power Consumption	P_3			7	W
Instantaneous peak current	Icc_ip_3	-	-	2800	mA
Sustained peak current	Icc_sp_3	-	-	2310	mA
Steady state current	Icc_3	See Note 3			mA
High Power Mode Power Class 4 module					
Power Consumption	P_4			8	W
Instantaneous peak current	Icc_ip_4	-	-	3200	mA
Sustained peak current	Icc_sp_4	-	-	2640	mA
Steady state current	Icc_4	See Note 3			mA
High Power Mode Power Class 5 module					
Power Consumption	P_5			10	W
Instantaneous peak current	Icc_ip_5	-	-	4000	mA
Sustained peak current	Icc_sp_5	-	-	3300	mA
Steady state current	Icc_5	See Note 3			mA
High Power Mode Power Class 6 module					
Power Consumption	P_6			12	W
Instantaneous peak current	Icc_ip_6	-	-	4800	mA
Sustained peak current	Icc_sp_6	-	-	3960	mA
Steady state current	Icc_6	See Note 3			mA
High Power Mode Power Class 7 module					
Power Consumption	P_7			14	W
Instantaneous peak current	Icc_ip_7	-	-	5600	mA
Sustained peak current	Icc_sp_7	-	-	4620	mA
Steady state current	Icc_7	See Note 3			mA
High Power Mode Power Class 8 module					
Power Consumption	P_8[4]			>14	W
Instantaneous peak current	Icc_ip_8	-	-	P_8/2.5	A
Sustained peak current	Icc_sp_8	-	-	P_8/3.03	A
Steady state current	Icc_8	-	-	6	A

Note 1: Measured at VccTx, VccTx1, VccRx, VccRx1, Vcc1 and Vcc2
Note 2: T_ip and T_init are test conditions for measuring inrush current and not characteristics of the module
Note 3: The module must stay within its declared power class.
Note 4: User must read management register for maximum power consumption

4.3 ESD

Where ESD performance is not otherwise specified, e.g. in the InfiniBand specification, the QSFP-DD module shall meet ESD requirements given in EN61000-4-2, criterion B test specification when installed in a properly grounded cage and chassis. The units are subjected to 15kV air discharges during operation and 8kV direct contact discharges to the case. All the QSFP-DD module and host pins including high speed signal pins shall withstand 1000 V electrostatic discharge based on Human Body Model per ANSI/ESDA/JEDEC JS-001.

4.4 Clocking Considerations

4.4.1 Data Path Description

Within a module, host electrical and module media lanes are grouped together into a logical concept called a data path. A data path is intended to represent a group of lanes over which a block of data is distributed that will be powered up or down and initialized together. Some examples include a 100GAUI-4 to 100GBASE-SR4 module implementation, where the data path would include four host electrical lanes and four module media lanes, or a 400GAUI-8 to 400GBASE-DR4 module implementation, where the data path would include eight host electrical lanes and four module media lanes.

4.4.2 Tx Clocking Considerations

Within a given Tx data path the host is responsible for ensuring that all electrical lanes delivered to the module are frequency synchronous (sourced from the same clock domain). If a module supports multiple Tx data paths running concurrently, the different Tx data paths can either all be in a single clock domain or separate clock domains. The module advertises which of these two modes it supports via the management registers.

If the module supports multiple Tx data paths running concurrently in a single clock domain, the module shall ensure that active Tx data paths continue to operate undisturbed even as other Tx data paths (and their associated Tx input lanes) are enabled/disabled by the host.

4.4.3 Rx Clocking Considerations

Within a given Rx data path all lanes received on the module media interface are required to be frequency synchronous (sourced from the same clock domain). If a module supports multiple Rx data paths running concurrently, the module shall allow the different Rx data paths to be asynchronous from each other (sourced from separate clock domains).

5 Mechanical and Board Definition

5.1 Introduction

The cages and modules defined in this section are illustrated in Figure 9 (2x1 stacked cage and module), Figure 10 (press fit cage for surface mount connector}, Figure 11 (Type 1 pluggable module) and Figure 12 (Type 2 pluggable module). All pluggable modules and direct attach cable plugs (both Type 1 and Type 2) must mate to the connectors and cages defined in this specification. The Type 2 module allows an additional extension of the module outside of the cage to allow for flexibility in module design. A Type 2A module includes a heat sink on the extension of the module outside the cage to provide enhanced thermal performance. Heat sink/clip thermal designs are application specific and not specifically defined by this specification. See Appendix A for informative recommendations on overall module length including handle. See Appendix B for recommended heat sink design for Type 2A modules.

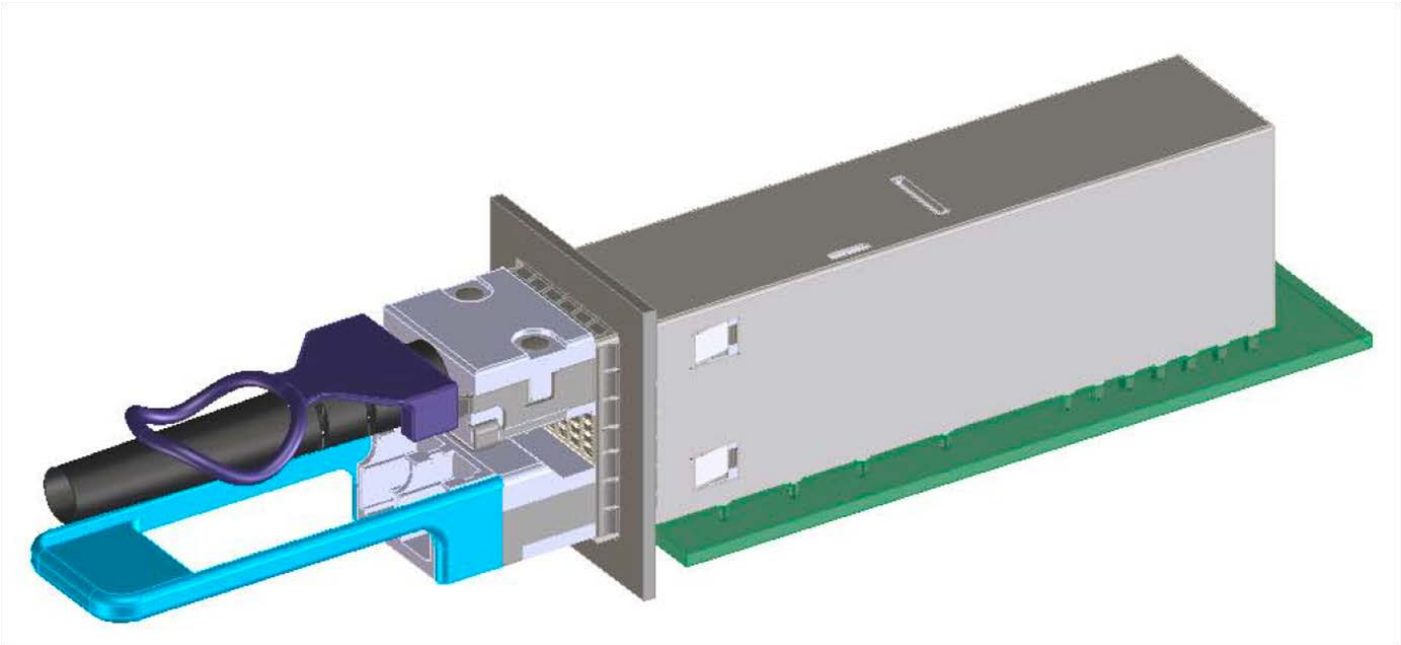

Figure 9: 2x1 stacked cage and module

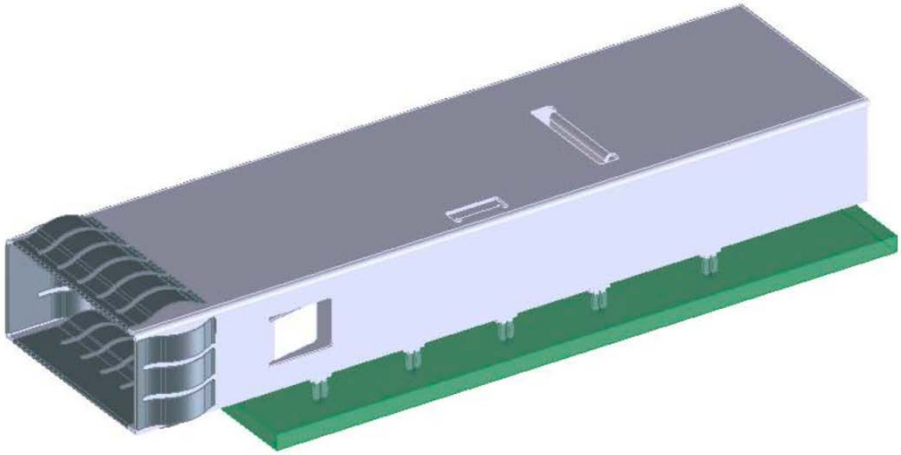

Figure 10: Press fit cage for surface mount (SMT) connector

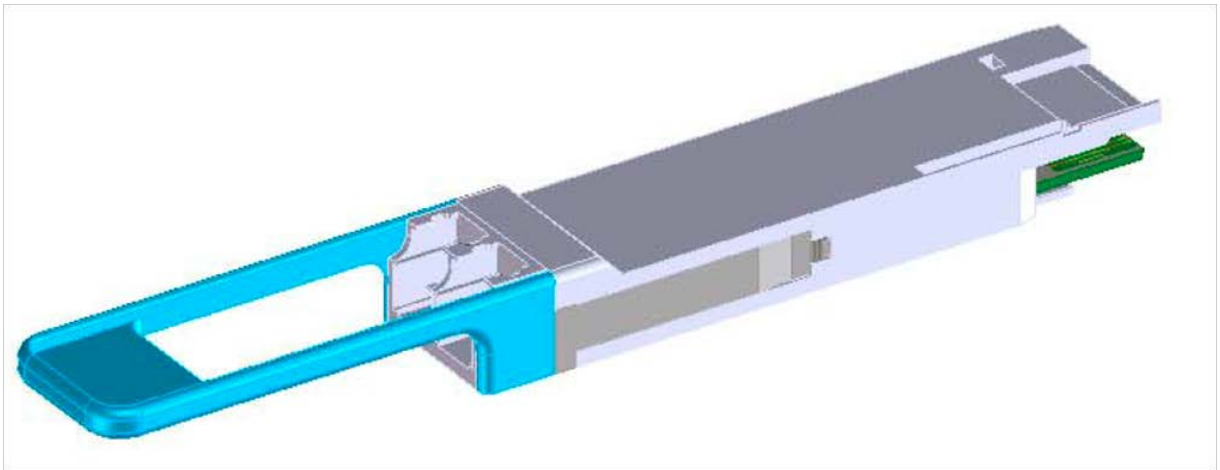

Figure 11: Type 1 Pluggable module

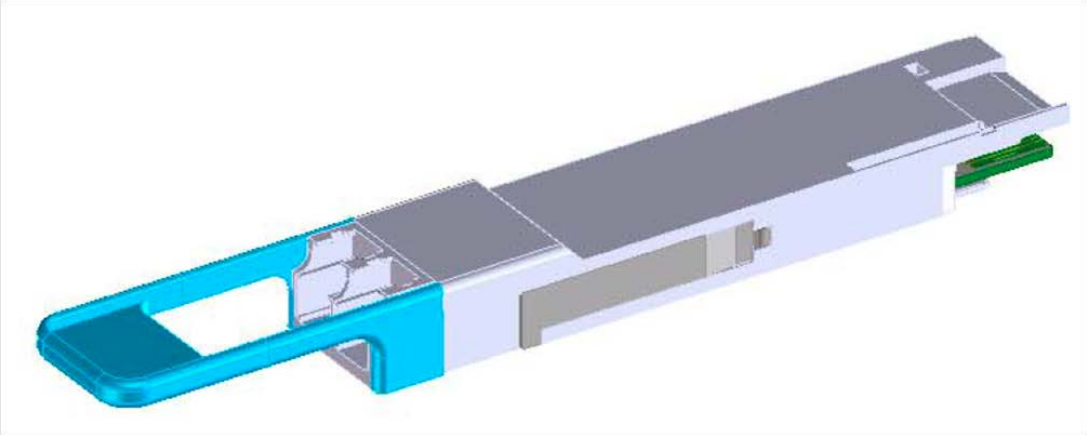

Figure 12: Type 2 Pluggable module

5.2 Datums, Dimensions and Component Alignment

A listing of the datums for the various components is contained in Table 8. The alignments of some of the datums are noted. In order to reduce the complexity of the drawings, all dimensions are considered centered unless otherwise specified. Dimensions and tolerancing conform to ASME Y14.5-2009. All dimensions are in millimeters.

Table 8- Datums

Datum	Description
A	Host Board Top Surface
B	Inside surface of bezel
C	**Distance between Connector terminal thru holes on host board
D	*Hard stop on module
E	**Width of module
F	Height of module housing
G	**Width of module pc board
H	Leading edge of signal contact pads on module pc board
J	Top surface of module pc board
K	*Host board thru hole #1 to accept connector guide post
L	*Host board thru hole #2 to accept connector guide post
M	**Width of bezel cut out
P	Vertical Center line of internal surface of cage
S	Seating plane of cage on host board
T	*Hard stop on cage
AA	**Connector slot width
BB	Seating plane of connector on host board
DD	Top surface of module housing
EE	Centerline of module opening to locate paddle card Datum H
FF	Centerline of upper port cage height
GG	Centerline of lower port cage height
EE	Primary Datum hole for 2x1 Host PCB
*Datums D and T are aligned when assembled (see Figure 13 and Figure 14) **Centerlines of datums AA, C, E, G, M are aligned on the same vertical plane	

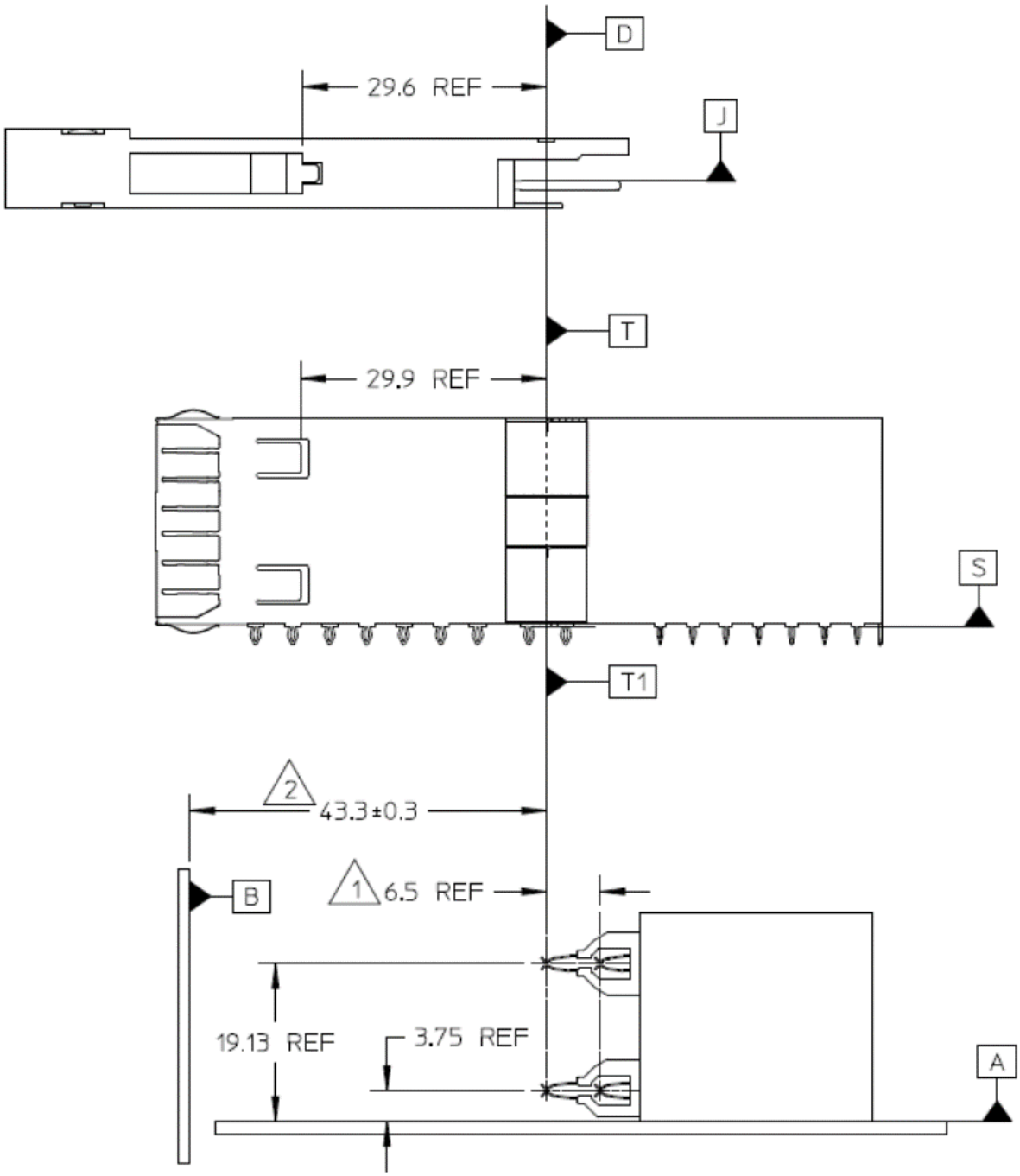

NOTES:

1. LOCATION OF CONTACT POINTS ARE DEFINED BY CONNECTOR SUPPLIERS BASED UPON THE PADDLE CARD PAD LAYOUT

2. DIMENSION APPLIES TO CAGES WITH SPRING FINGERS

Figure 13: 2X1 stacked connector/cage datum descriptions

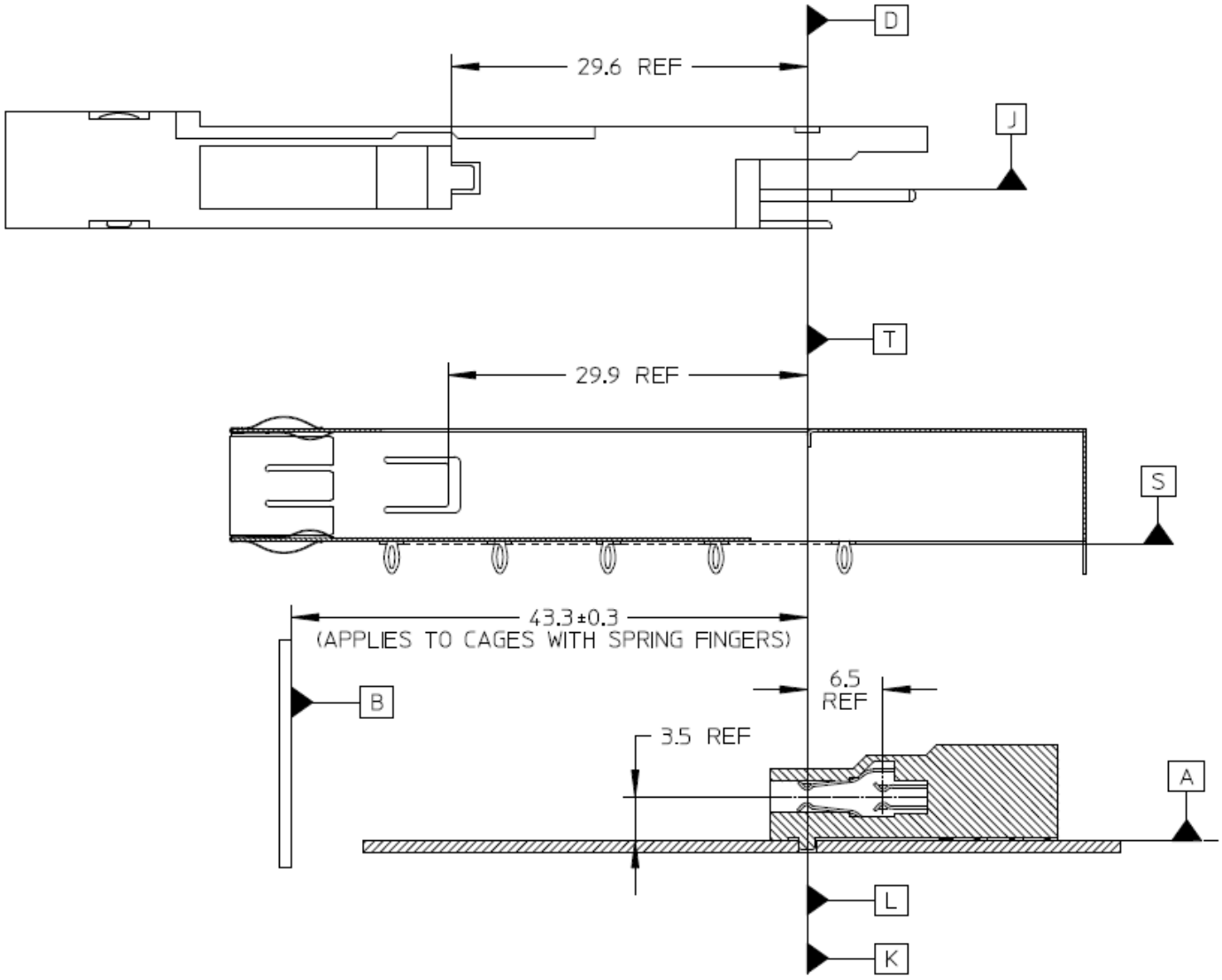

Figure 14: Surface mount connector/cage datum descriptions

5.3 Module Mechanical Dimensions

The mechanical outline for the Type 1 module is shown in Figure 15, the Type 2 module is shown in Figure 16 and the Type 2A module in Figure 17. The module shall provide a means to self-lock with either the 2x1 stacked cage or SMT cage upon insertion. The module package dimensions are defined in Figure 18 and Figure 20. The dimensions that control the size of the module that extends outside of the cage are listed as maximum dimensions per Note 4 in Figure 18. Note: All dimensions are in mm.

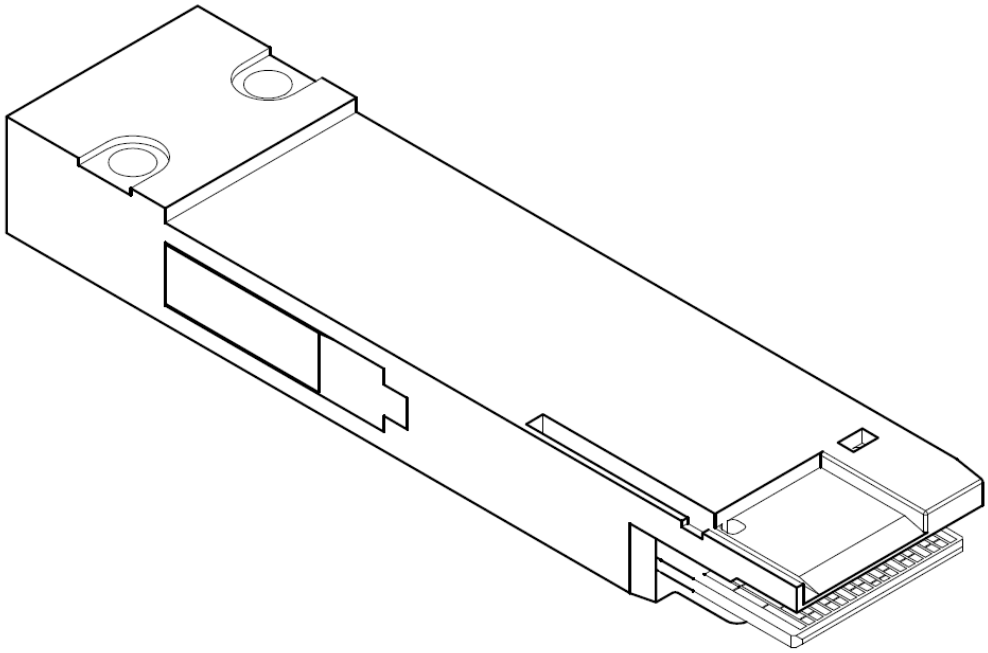

Figure 15: Type 1 Module

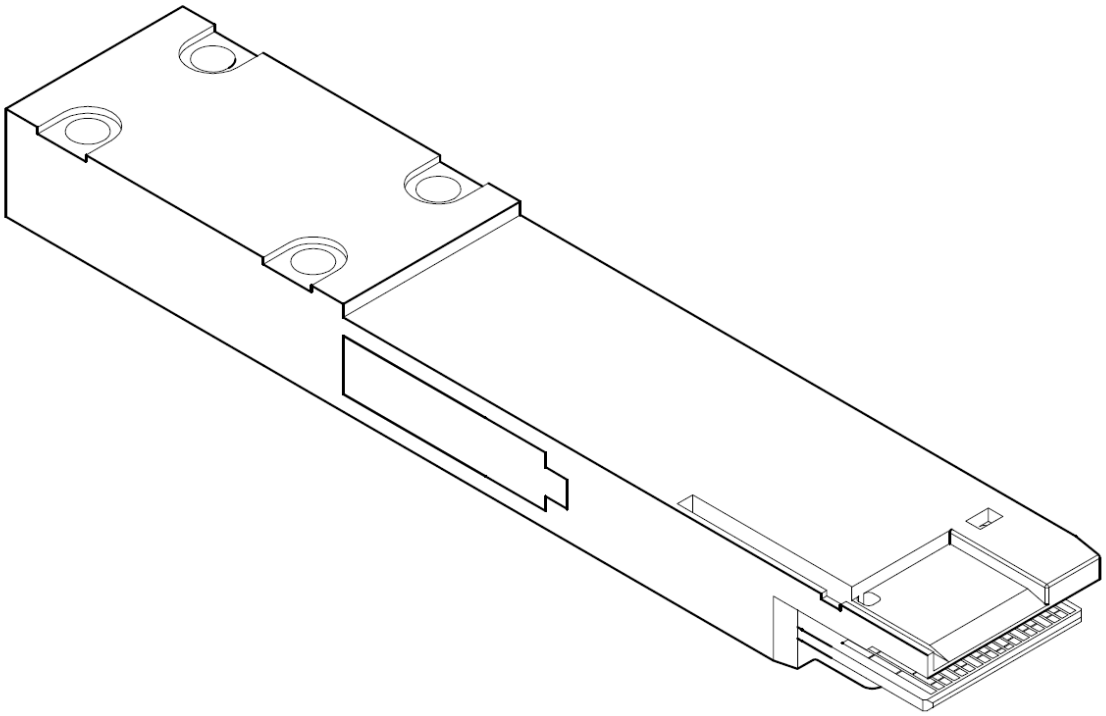

Figure 16: Type 2 Module

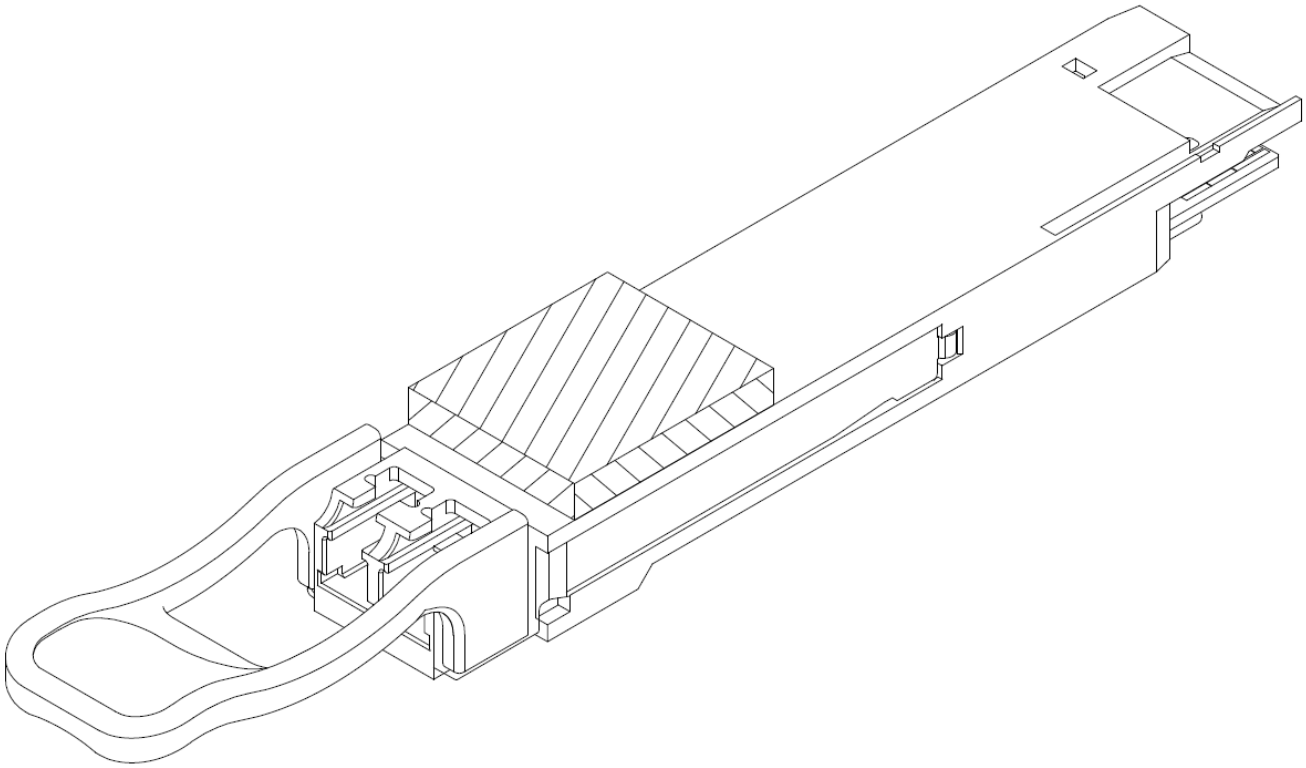

Figure 17: Type 2A Module

NOTES APPLY TO MODULE DRAWING

1. DIMENSIONS AND TOLERANCING CONFORM TO ASME Y14.5-2009.
2. ALL DIMENSIONS ARE IN MILLIMETERS.
3. UNLESS OTHERWISE SPECIFIED, SHARP CORNERS AND EDGES ARE NOT ALLOWED. ROUND OFF ALL EDGES AND CORNERS TO A MINIMUM RADIUS OF 0.10 MM.

4 DIMENSION DEFINES ENLARGED SECTION OF TRANSCEIVER THAT EXTENDS OUTSIDE OF CAGE TO ACCOMMODATE MATING PLUG AND ACTUATOR MECHANISM.

5 SURFACES ON ALL 4 SIDES OF THE 12.4 MIN DIMENSION TO BE CONDUCTIVE FOR CONNECTION TO CHASSIS GROUND.

6 DIMENSION APPLES TO LATCH MECHANISM.

7 DIMENSION APPLIES TO THE LOCATION OF THE EDGE OF THE MODULE BOARD PAD, DATUM H. CONTACTS 21, 22, 36 AND 37 ARE VISIBLE.

8 DIMENSION TO INCLUDE BAIL TRAVEL.

9 DIMENSION APPLY TO OPENINGS IN THE HOUSING.

10 OPTIONAL FEATURE TO AID INSPECTION OF DIMENSIONS FROM DATUM D.

11 FLATNESS AND SURFACE ROUGHNESS (Ra) APPLIES FOR INDICATED LENGTH AND MIN WIDTH OF 13MM. SURFACE TO BE THERMALLY CONDUCTIVE. SEE SECTION 5.4 TABLE 8 FOR FLATNESS AND ROUGHNESS REQUIREMENTS.

12 HIGHER WATTAGE MODULES MAY REQUIRE ADDITIONAL SPACE FOR COOLING.

13 BLOCKING FEATURE IS CRITICAL TO APPLICATION FUNCTION. A RADIUS OF 0.1 ± 0.05 MM IS REQUIRED ON THE LEADING EDGES OF THIS FEATURE.

14 LABELS PERMITTED ON BOTTOM OF MODULE.
LABEL TO BE ZERO THICKNESS OR RECESSED BELOW BOTTOM SURFACE OF MODULE.
LABEL CONTENTS AND POSITION TO BE DETERMINED BY MODULE MANUFACTURER BUT ARE NOT ALLOWED IN THE KEEP OUT AREA SHOWN IN THE BOTTOM VIEW.

15 THE LABEL(S) SHALL NOT INTERFERE WITH THE MECHANICAL, THERMAL, OR EMI PROPERTIES AND MUST NOT VIOLATE NOTE 5.

16 DIMENSION APPLIES TO LATCH POCKET

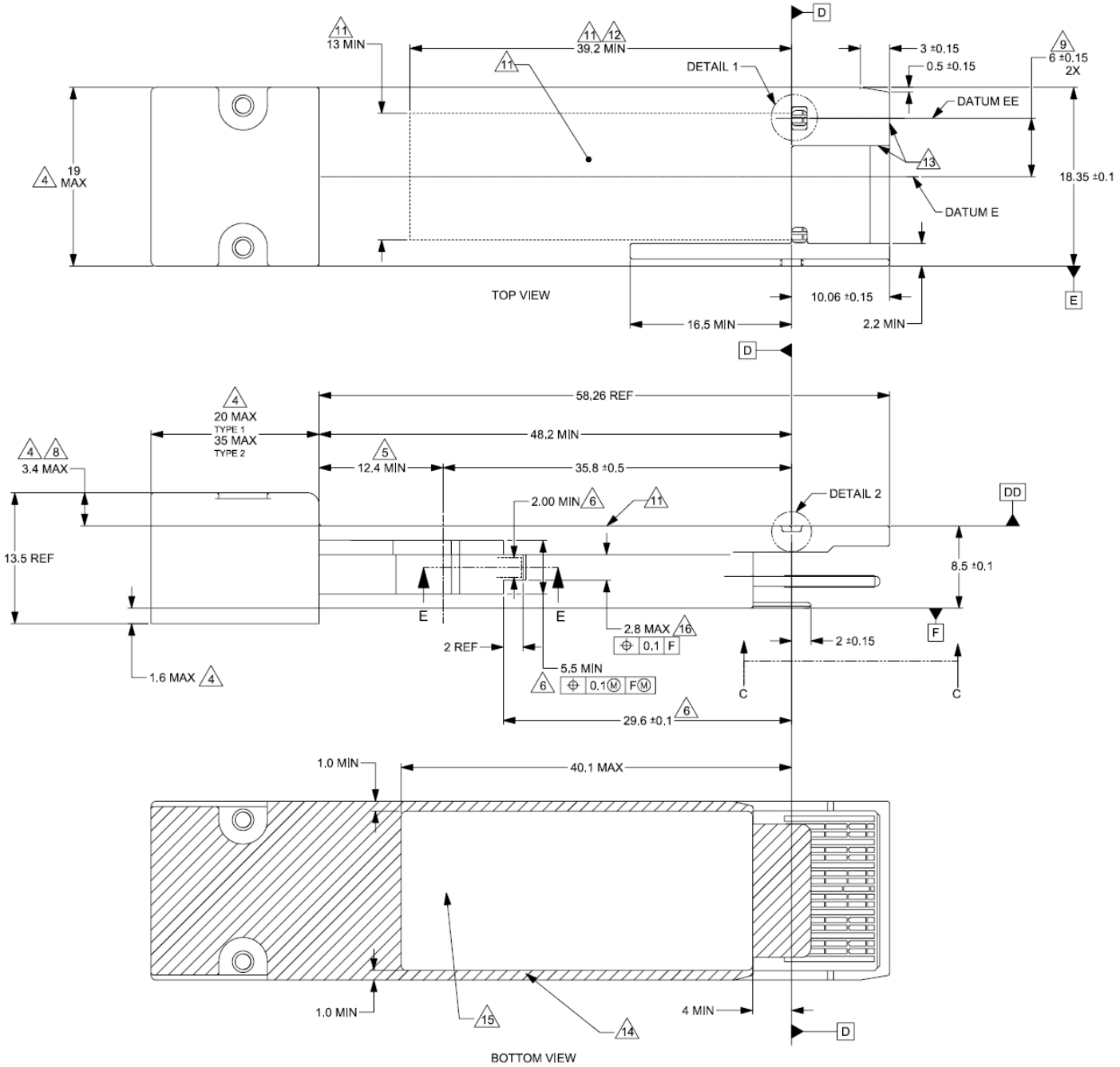
13 MIN
39.2 MIN
3 ±0.15
0.5 ±0.15
6 ±0.15
2X
DETAIL 1
DATUM EE
19
MAX
18.35 ±0.1
DATUM E
TOP VIEW
10.06 ±0.15
16.5 MIN
2.2 MIN
58.26 REF
20 MAX
TYPE 1
35 MAX
TYPE 2
48.2 MIN
3.4 MAX
12.4 MIN
35.8 ±0.5
2.00 MIN
DETAIL 2
13.5 REF
8.5 ±0.1
2.8 MAX
0.1 F
2 REF
2 ±0.15
5.5 MIN
0.1 M F M
1.6 MAX
29.6 ±0.1
1.0 MIN
40.1 MAX
1.0 MIN
4 MIN
BOTTOM VIEW

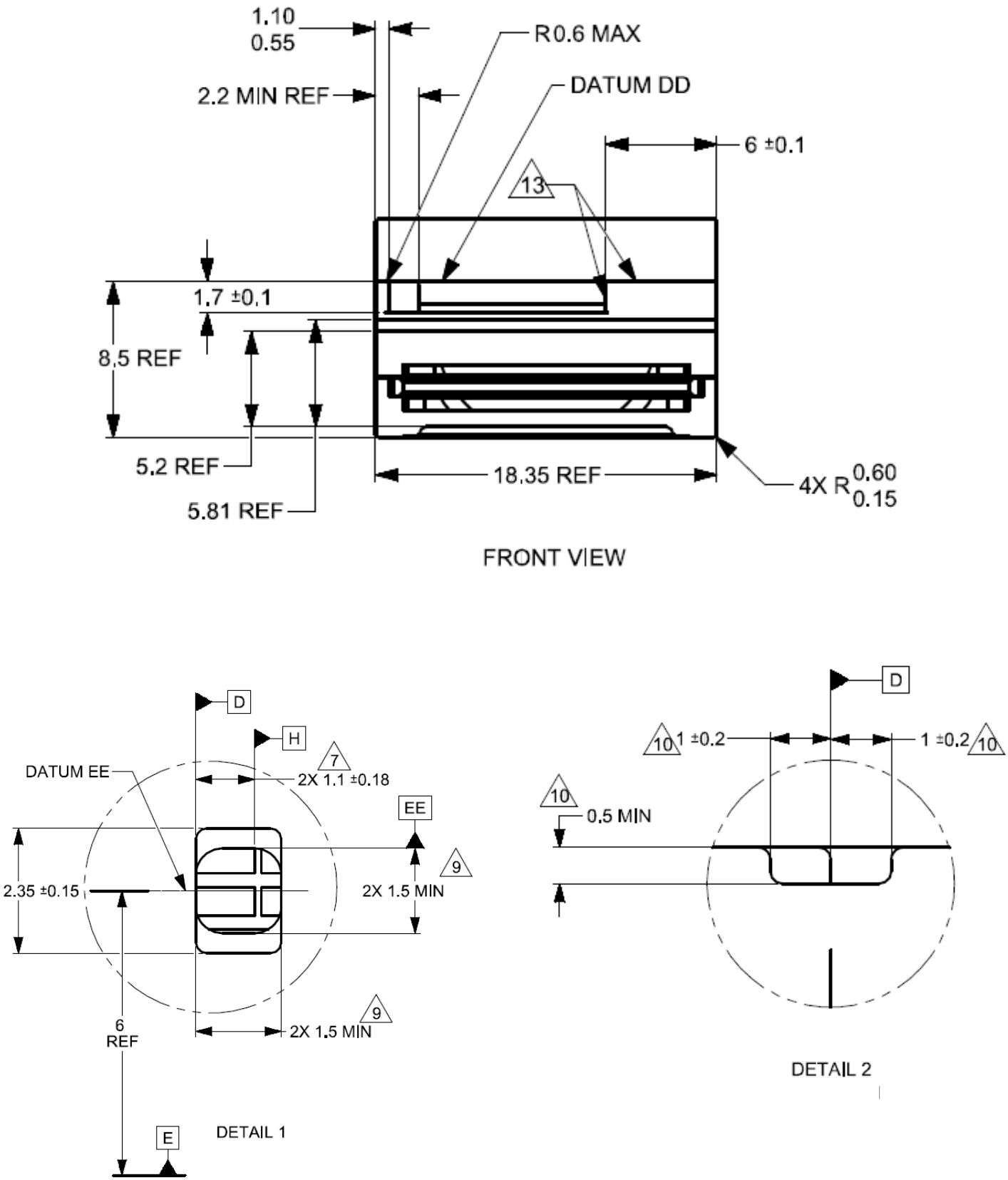

Figure 18: Drawing of module

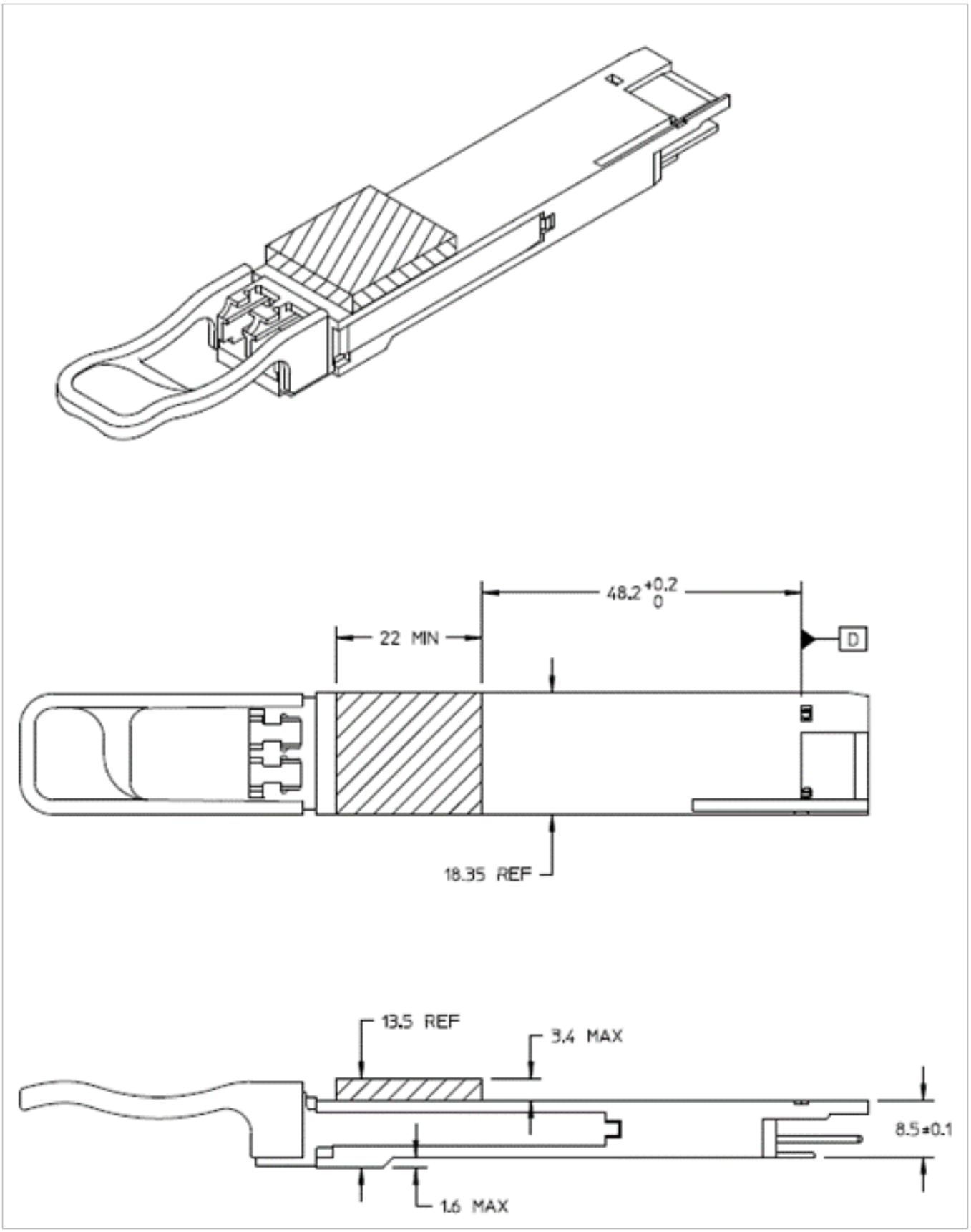

Figure 19: Type 2A Module with Heat Sink

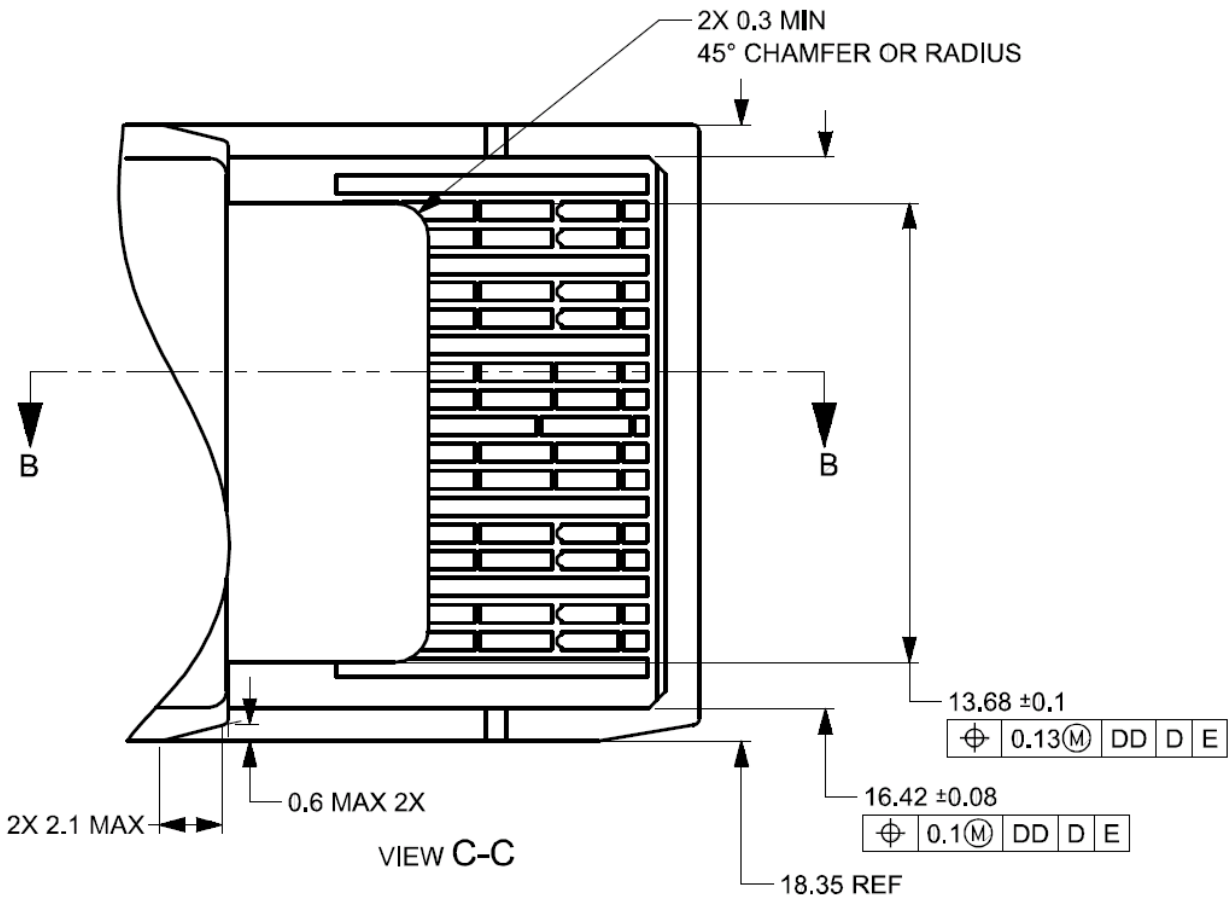
2X 0.3 MIN
45° CHAMFER OR RADIUS
B
B
13.68 ±0.1
0.13Ⓜ DD D E
16.42 ±0.08
0.1Ⓜ DD D E
0.6 MAX 2X
2X 2.1 MAX
VIEW C-C
18.35 REF

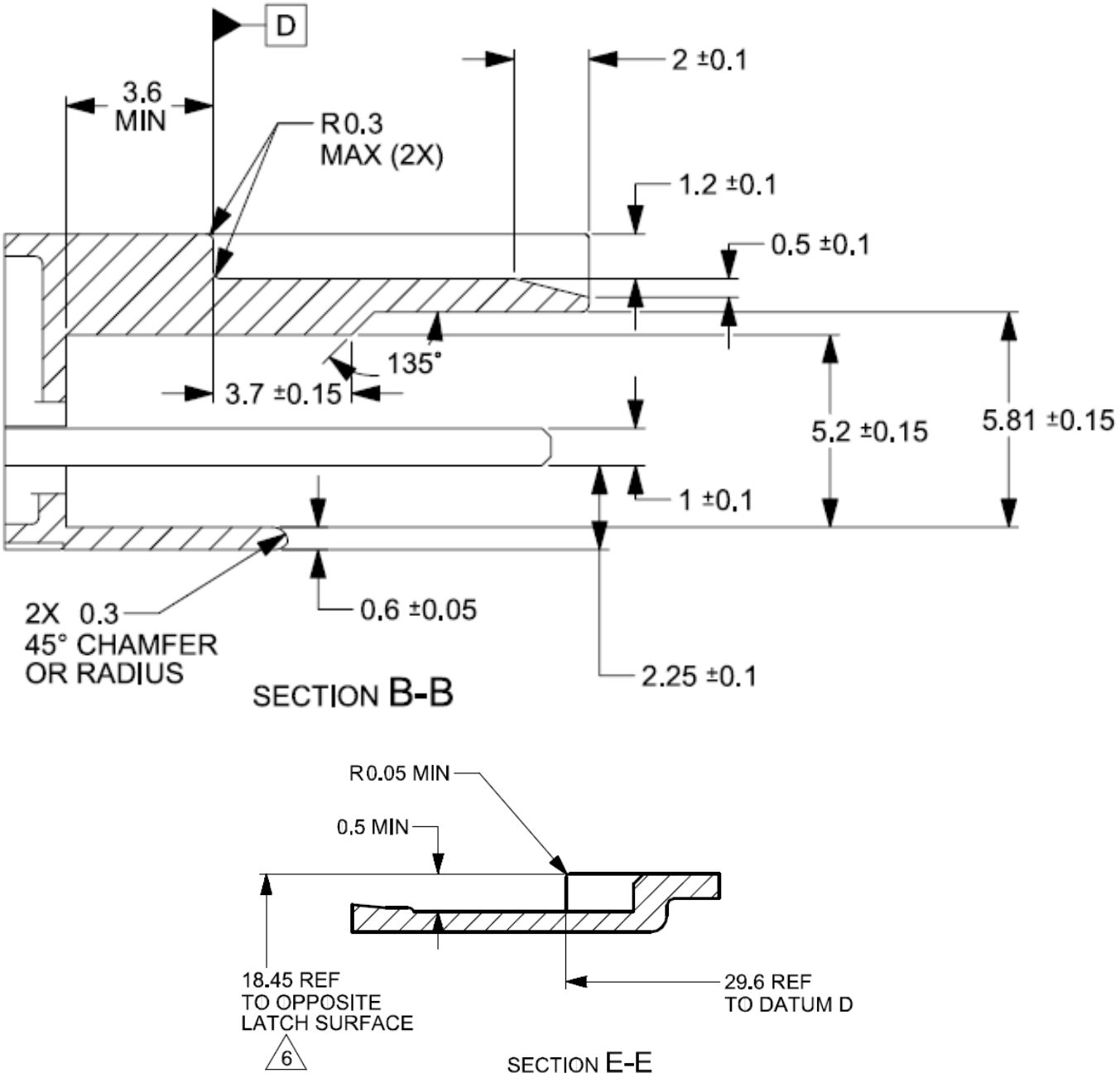

Figure 20: Detailed dimensions of module

5.4 Module Flatness and Roughness

Module flatness and roughness are specified to improve module thermal characteristics when used with a riding heat sink. Relaxed specifications are used for lower power modules to reduce cost. The module flatness and roughness specifications apply to the specified heat sink contact area as specified in Figure 18. Specifications for Module flatness and surface roughness are shown in Table 9 (see Figure 18 note 11).

Table 9- Module flatness specifications

Power Class	Module Flatness (mm)	Surface Roughness (Ra,µm)
1	0.075	1.6
2	0.075	1.6
3	0.075	1.6
4	0.075	1.6
5	0.050	0.8
6	0.050	0.8
7	0.050	0.8
8	0.050	0.8

5.5 Module paddle card dimensions

Notes for Module Paddle Card Drawings (Figures 21 and 22)

1. Pre-wipe pads (shaded area) on module card host side are optional
2. A single split in the pre-wipe signal pad is optional, and if implemented, the resulting 2 pads shall be separated with a gap of 0.13 +/- 0.05
3. Dimensioning and tolerancing conform to ASME Y14.5-2009
4. All dimensions are in millimeters
5. No solder mask within 0.05 mm of all defined contact pad edges.
6. No solder mask between end contacts and the sides of the paddle card
7. Datum H is established with Datum Target points at the leading edge of the outer most signal contact pads to be re-established on each side
8. Dimension applies from the first set of signal pads to the second set of signal pads
9. Dimension applies from the first set of signal pads to the second set of signal pads
10. Dimension and tolerance applies to all power pads on both top and bottom side of paddle card
11. Dimension and tolerance applies to all power pads on both top and bottom side of paddle card
12. Dimension and tolerance applies to all power pads on both top and bottom side of paddle card
13. A zero gap is allowed for a continuous pad option
14. Applies to all signal pad to pad spacing
15. Pre-wipe pads (shaded area) are required except in continuous power or groundpad designs
16. Paddle card thickness is measured over pads vias must not be proud of the pad surface
17. Minimum dimension required for mating sequence between signal and ground pads
18. Component keep out area measured from Datum H
19. Contact pad plating

    0.38 micrometers minimum gold over

    1.27 micrometers minimum nickel

    Alternate contact pad plating

    0.05 micrometers minimum gold over

    0.30 micrometers minimum palladium over

    1.27 micrometers minimum nickel

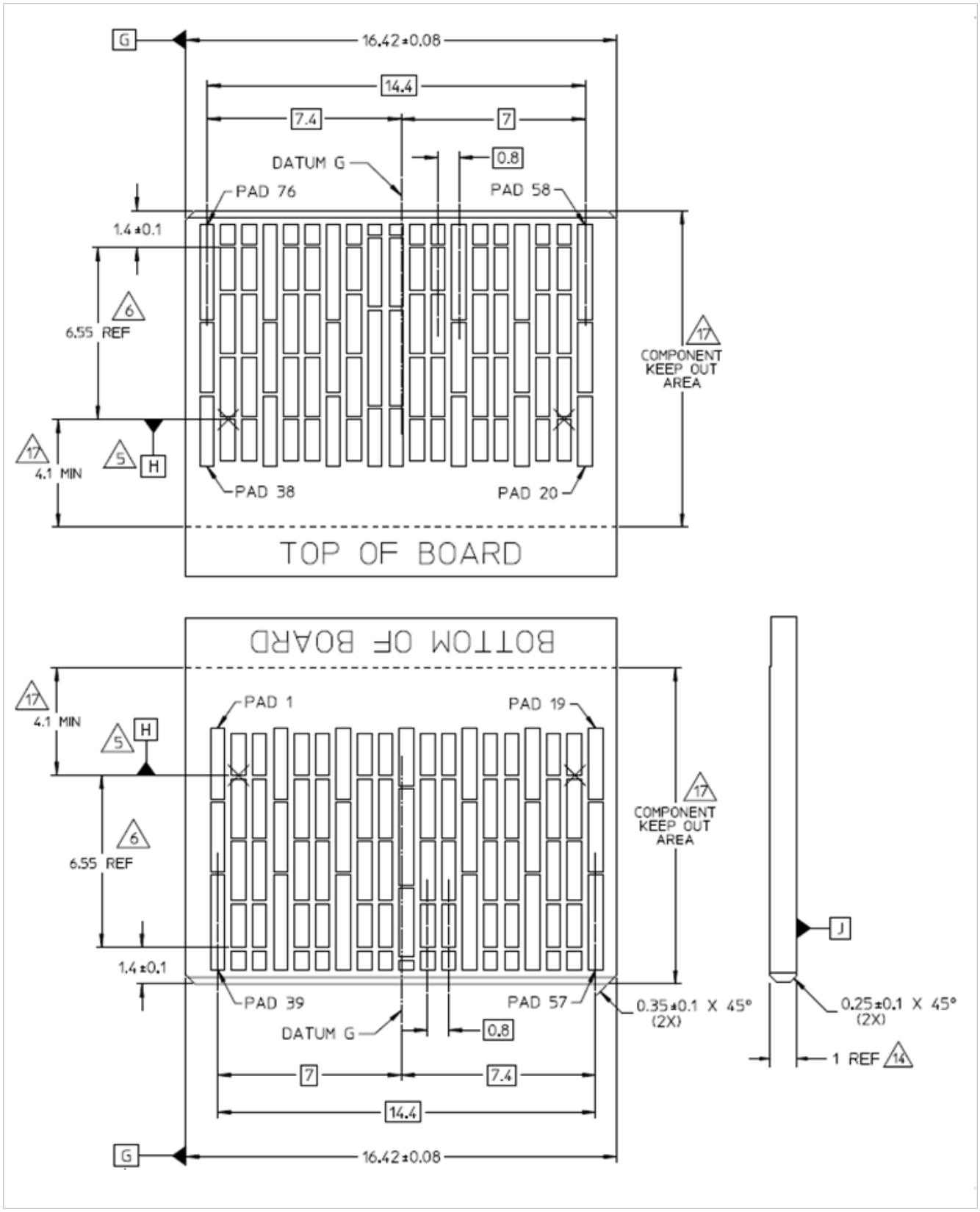

Figure 21: Module paddle card dimensions

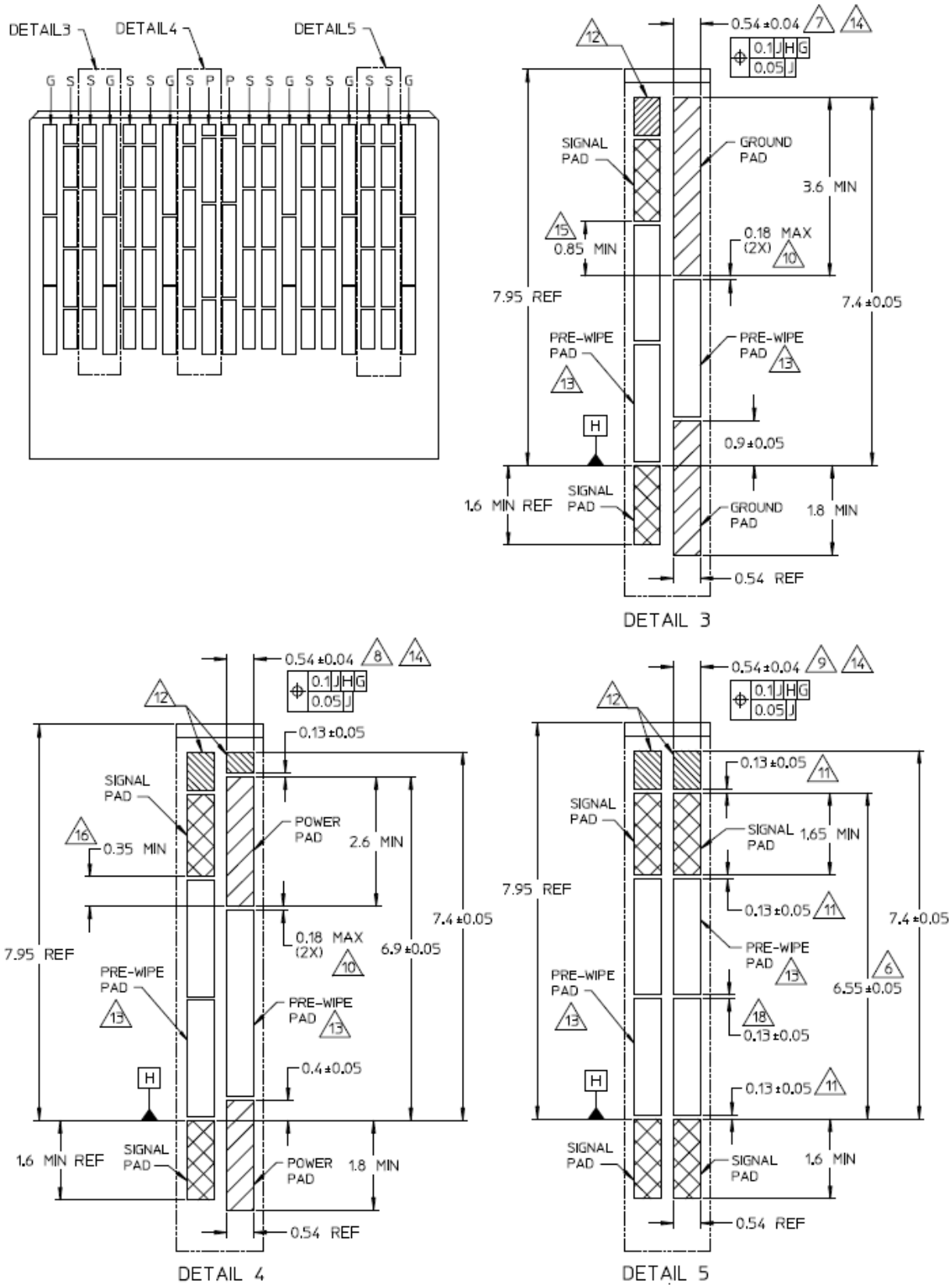

Figure 22: Module pad dimensions

5.6 Module Extraction and Retention Forces

The requirements for insertion forces, extraction forces and retention forces are specified in Table 10. The QSFP-DD cage and module are designed to ensure that excessive force applied to a cable does not damage the QSFP-DD cage or host connector. If any part is damaged by excessive force, it should be the cable or media module and not the cage or host connector which is part of the host system. The contact pad plating shall meet the requirements of Section 5.5.

Table 10- Insertion, Extraction and Retention Forces

Measurement	Min	Max	Units	Comments
QSFP module insertion	0	40	N	
QSFP-DD module insertion	0	90	N	
QSFP module extraction	0	30	N	
QSFP-DD module extraction	0	50	N	
QSFP module retention	90	N/A	N	No damage to module below 90N with latch engaged
QSFP-DD module retention	90	N/A	N	No damage to module below 90N with latch engaged
Cage retention (Latch strength)	125	N/A	N	No damage to latch below 125N
Cage retention in Host Board	114	N/A	N	Force to be applied in a vertical direction, no damage to cage
Insertion/removal cycles, connector/ cage	100	N/A	Cycles	Number of cycles for the connector and cage with multiple modules.
Insertion/removal cycles, QSFP-DD module	50	N/A	Cycles	Number of cycles for an individual module.
Note: Insertion, extraction and retention forces apply with or without the presence of a riding heat sink.				

5.7 2x1 Electrical Connector Mechanical

The QSFP-DD Connector is a 76-contact, right angle connector. The integrated connector in a 2x1 stacked cage is shown in Figure 23 with detailed drawings in Figure 24, Figure 25 and Figure 26. Recommendations for the 2x1 stacked cage bezel opening are shown in Figure 27.

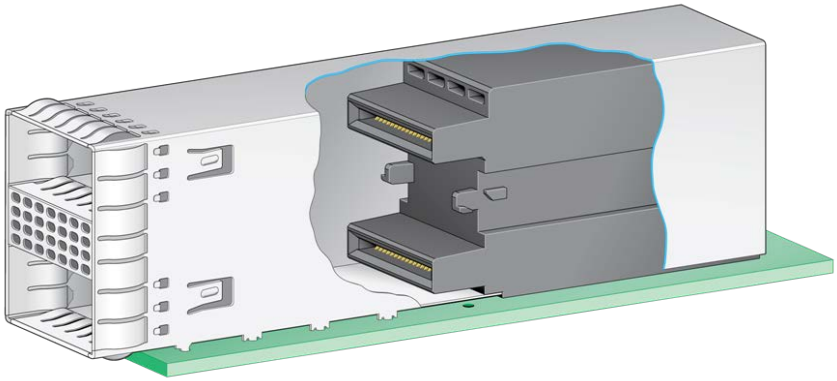

Figure 23: Integrated connector in 2x1 stacked cage

NOTES APPLY TO 2X1 STACKED CAGE :

1. DIMENSIONING AND TOLERANCING CONFORM TO ASME Y14.5-2009

2. ALL DIMENSIONS ARE IN MILLIMETERS.

3. DIMENSIONS FROM INSIDE SURFACES OF SPRING FINGERS WHEN FULLY DEPRESSED

4. CONNECTOR REMOVED FOR DRAWING CLARITY.

5. APPLIES TO ALL SPRING FINGERS ON ALL SIDES.

6. EXTERNAL CAGE DIMENSIONS. DOES NOT INCLUDE FOLDING TABS.

7. LENGTH OF CAGE AND SIGNAL TAILS.

8. PRESS FIT CAGE PINS APPLY TO RIGHT SIDE OF CAGE.

9. PRESS FIT CAGE PINS APPLY TO LEFT SIDE TO CAGE.

10. PRESS FIT PIN OFFSET BETWEEN RIGHT AND LEFT SIDE OF CAGE.

11. DIMENSIONS INCLUDES BACKCOVER.

12. SIZE AND POSITION OF CAGE AND CONNECTOR PRESS FIT PINS SHALL BE DEFINED BY EACH SUPPLIER BASED UPON THE PCB FOOTPRINT LAYOUT

13. CAVITY FOR HEAT SINK IS OPTIONAL

14. CONTACT PIN DIMENSION MEASURED FROM DATUM T

15. CONTACT PIN DIMENSION MEASURED FROM DATUM T1

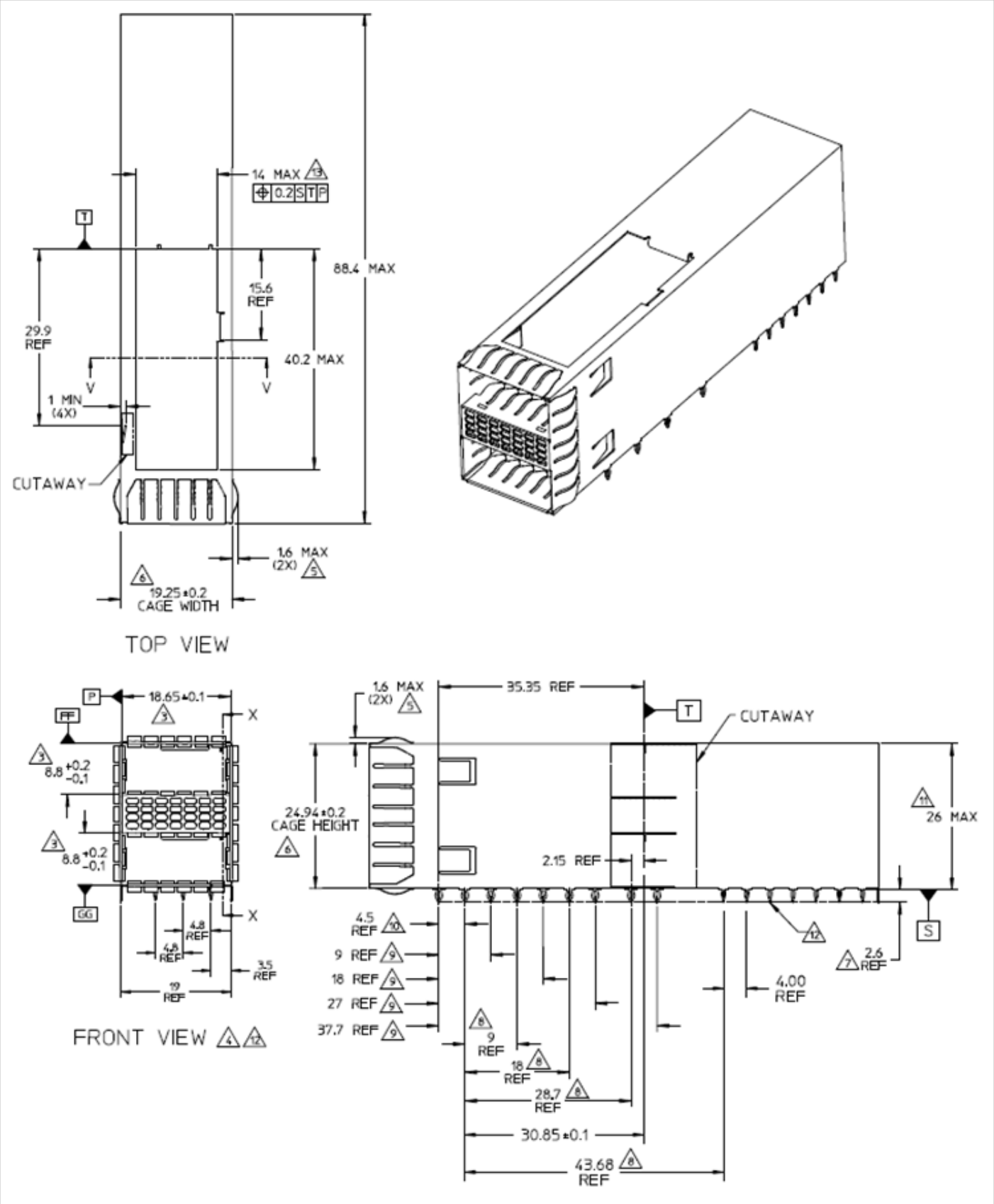

Figure 24: 2x1 stacked cage

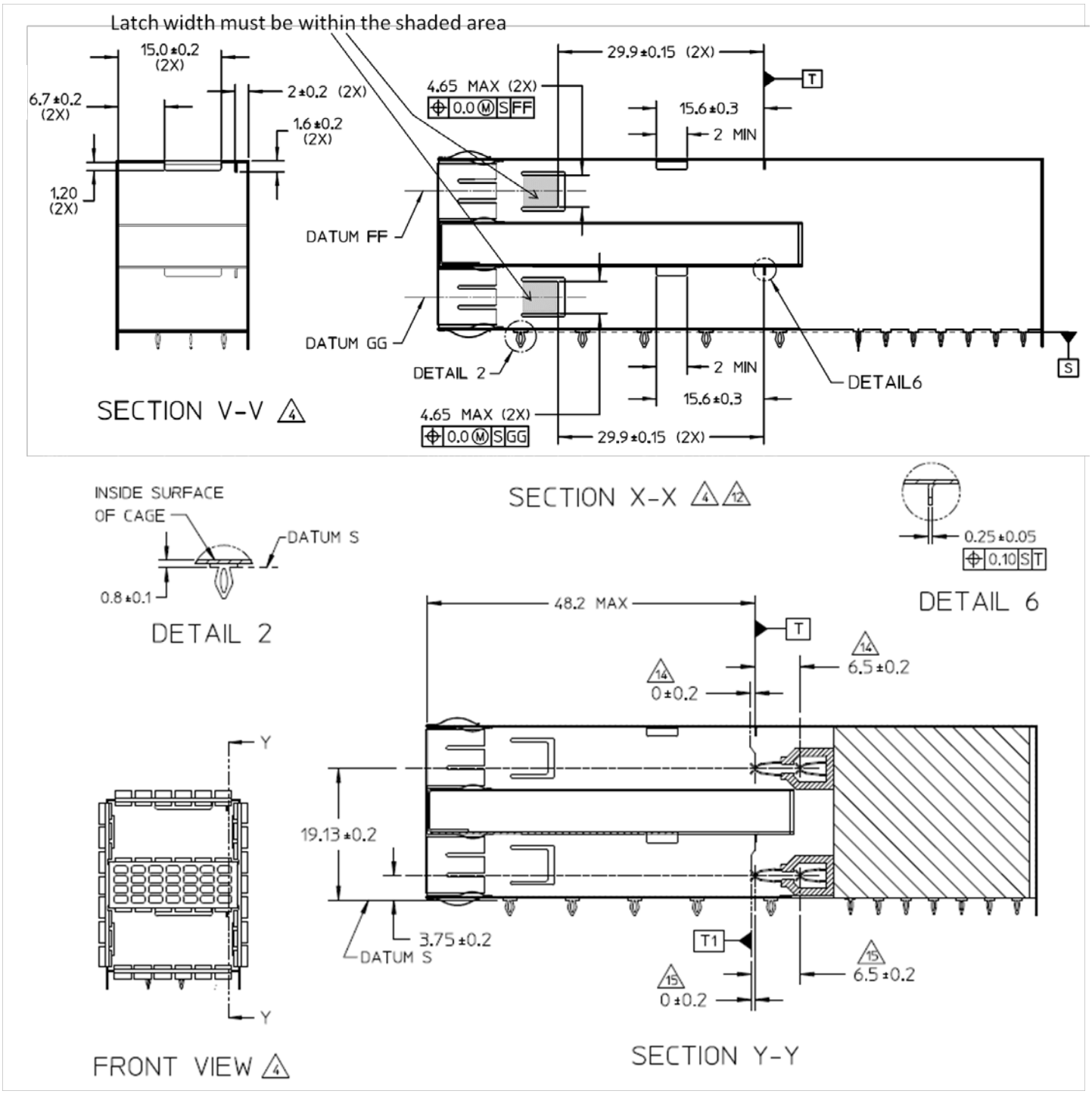

Figure 25: 2x1 stacked cage dimensions

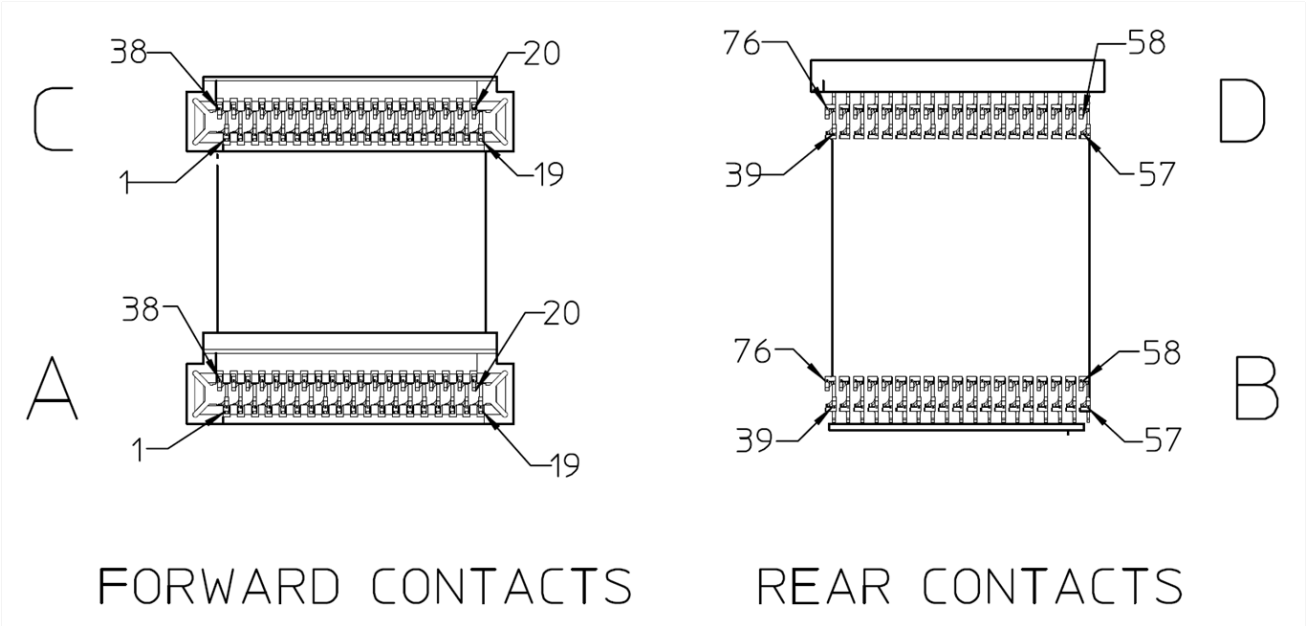

Figure 26: Connector pins in 2x1 stacked cage as viewed from the front

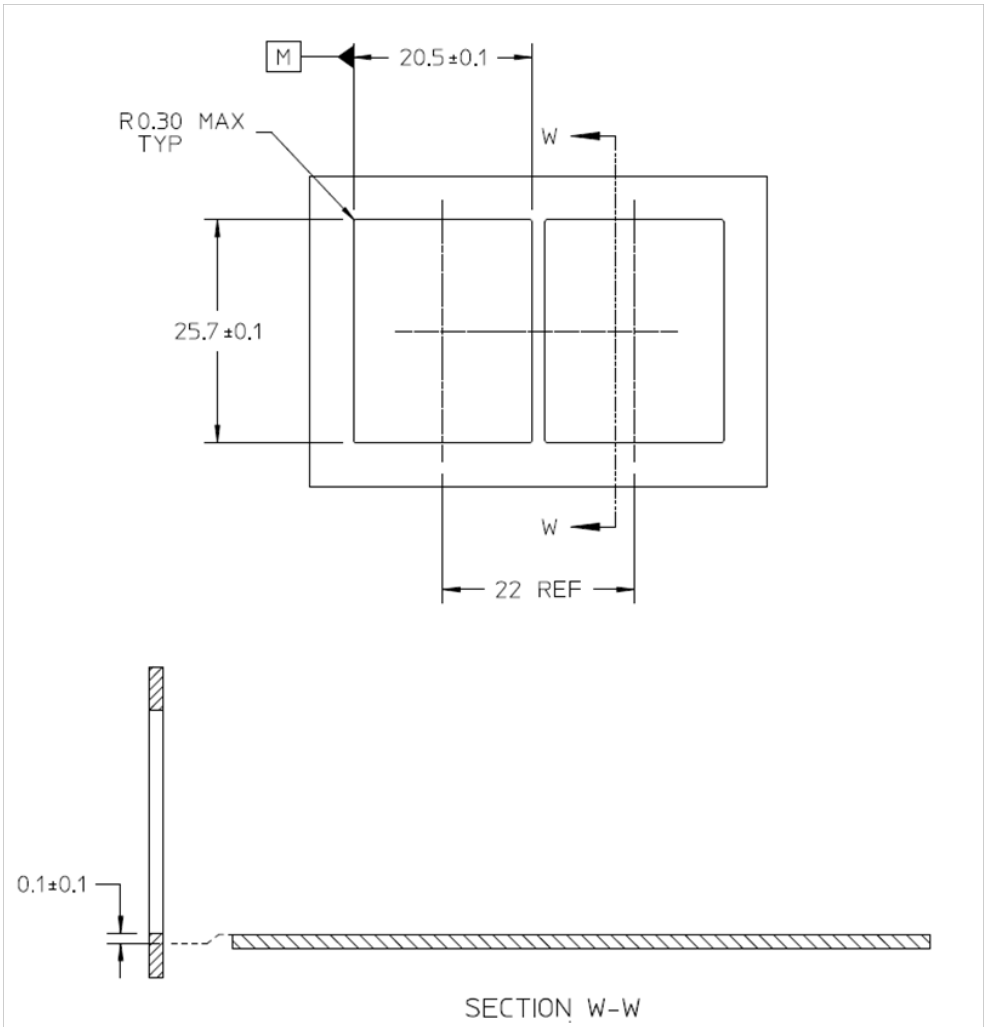

Figure 27: 2x1 Bezel Opening

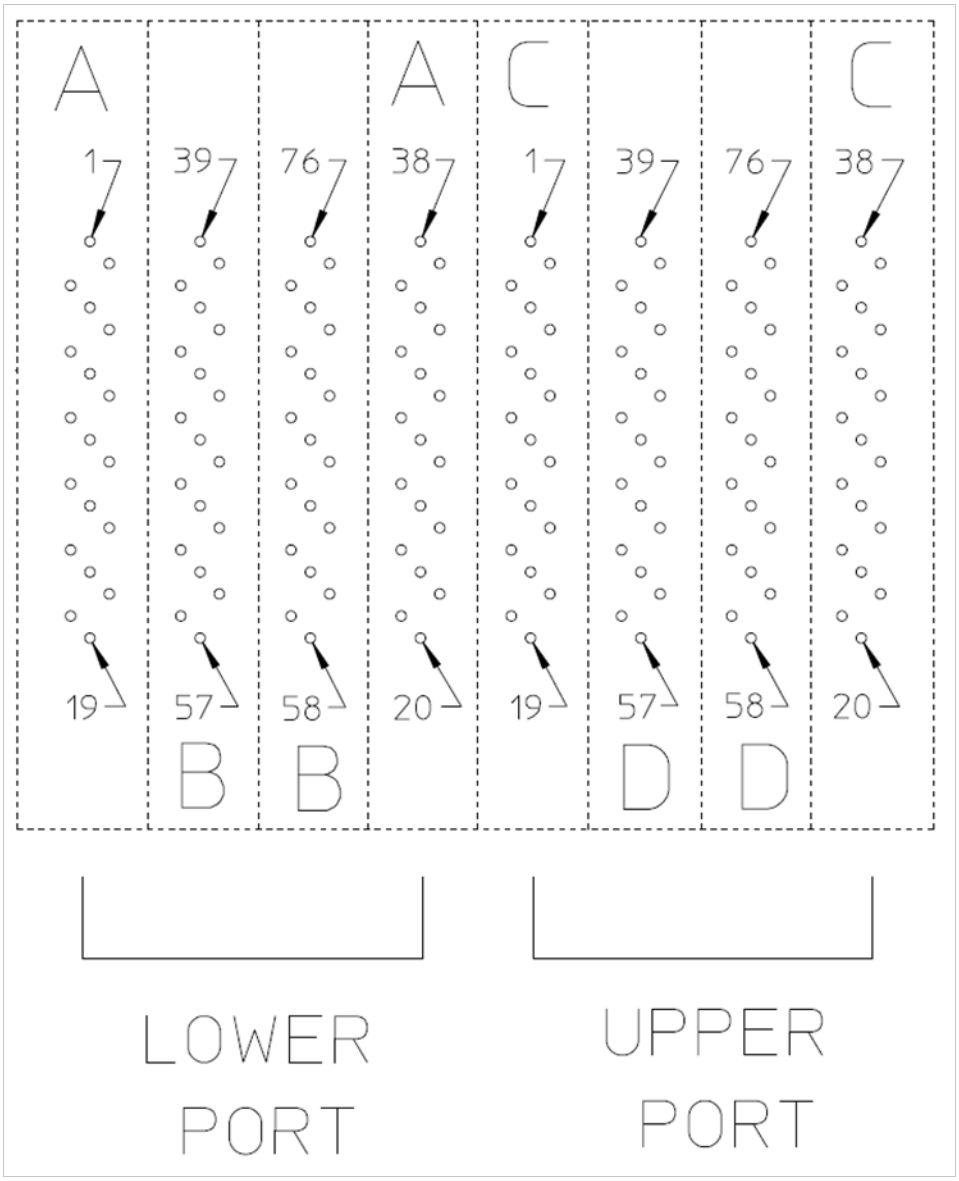

Figure 28: 2X1 host board connector contacts

5.7.1 2x1 Connector and Cage host PCB layout

A typical host board mechanical layout for attaching the QSFP-DD 2x1 Connector and Cage system is shown in
Figure 28 and Figure 29. Location of the pattern on the host board is application specific. To achieve 25-50 Gbps performance pad dimensions and associated tolerances must be adhered to and attention paid to the host board layout.

Notes for Host PCB (Figure 29):

1. The entire area under the connector (outside dashed lines) is to be considered a keep out area for components
2. Hatched area represent zones on the PCB that come in contact with or are in close proximity to the plastic housing or the connector cage. Indicated areas to be considered trace free.
3. Dimension applies to connector outline

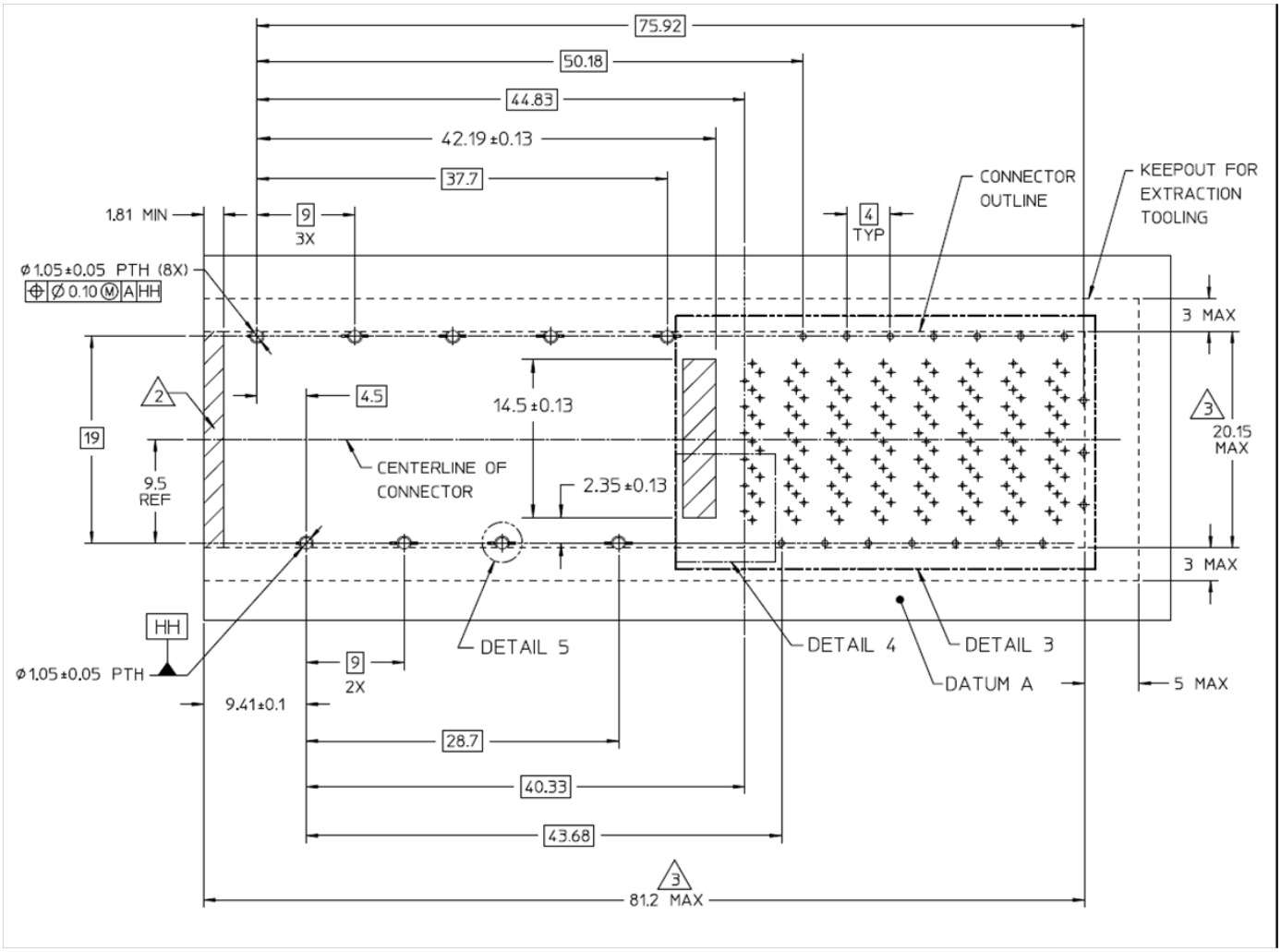

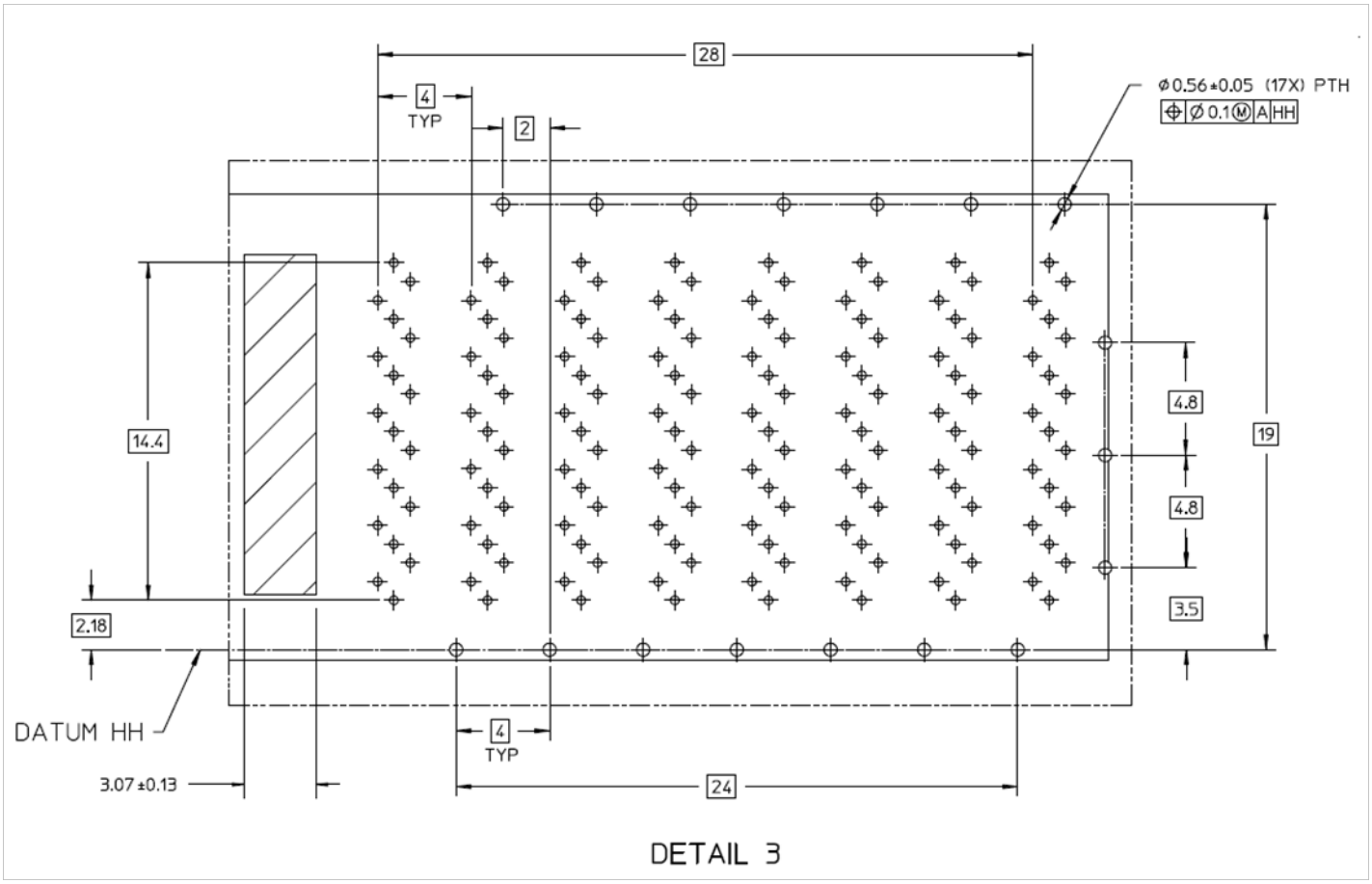

- - - -

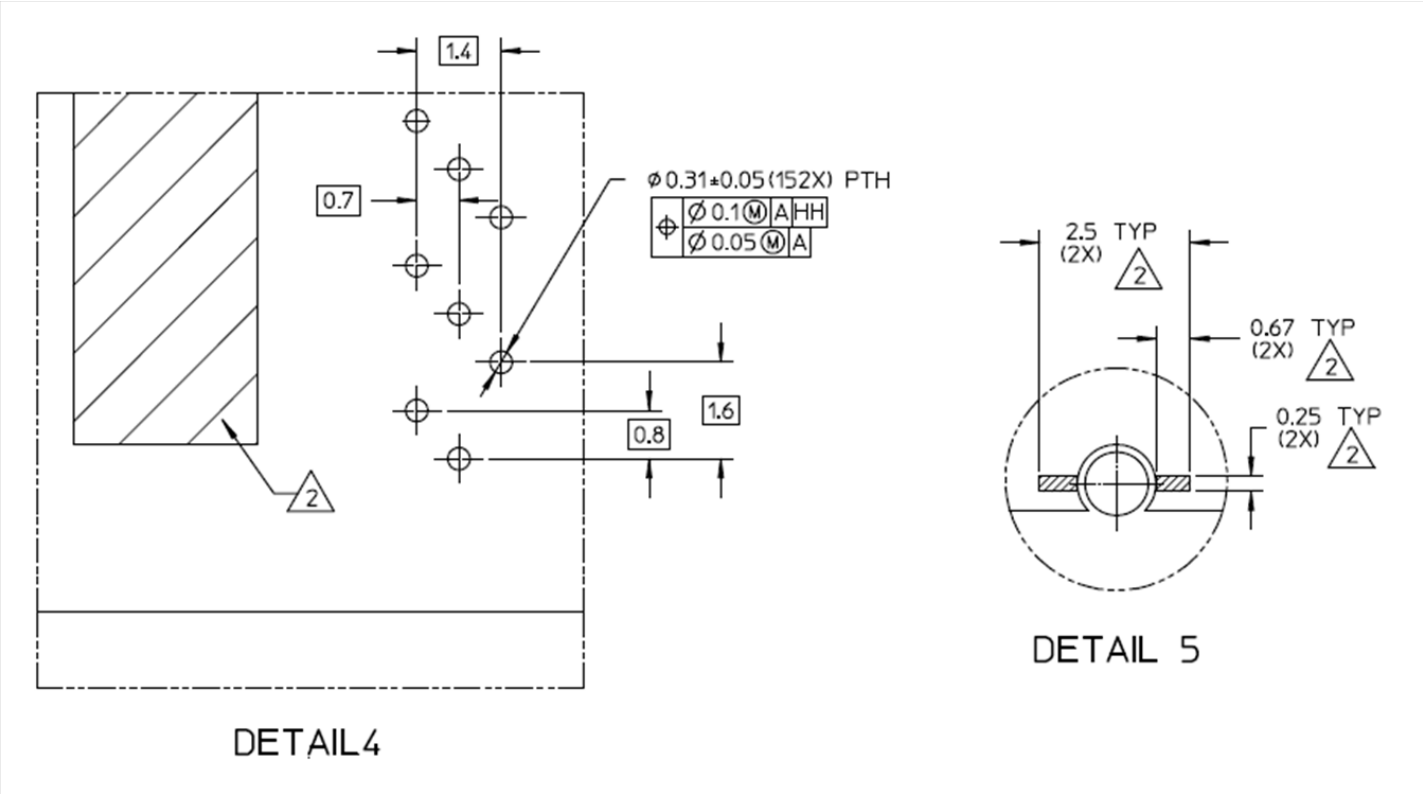

Figure 29: 2X1 Host PCB Mechanical Layout

+

5.8 Surface Mount Electrical Connector Mechanical

The QSFP-DD Connector is a 76-contact, right angle connector. The SMT connector in a 1xn cage is shown in Figure 30 with detailed drawings in Figure 31 and Figure 32. Recommendations for the SMT cage bezel opening are shown in Figure 33.

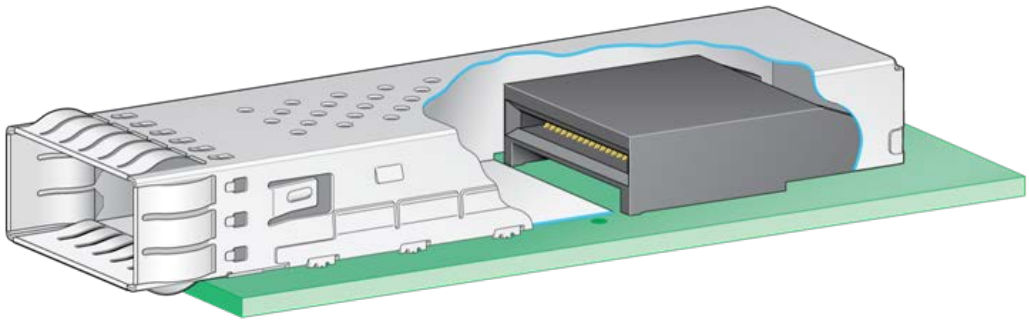

Figure 30: SMT connector in 1xn cage

NOTES APPLY TO SMT 1 X N CAGE DRAWINGS:

1. DIMENSIONING AND TOLERANCING CONFORM TO ASME Y14.5-2009

2. ALL DIMENSIONS ARE IN MILLIMETERS.

3. DIMENSIONS FROM INSIDE SURFACES OF SPRING FINGERS WHEN FULLY DEPRESSED

4. CAVITY FOR HEATSINK IS OPTIONAL

5. APPLIES TO ALL SPRING FINGERS ON ALL SIDES.

6. DATUM S IS DEFINED BY SEATING PLANE ON HOST BOARD

7. SIZE OF CAGE PRESS FIT PINS SHALL BE DEFINED BY EACH SUPPLIER BASED UPON THE PCB FOOTPRINT LAYOUT

8. THIS SURFACE REFERENCES POTENTIAL FEATURES TO SUPPORT MODULES

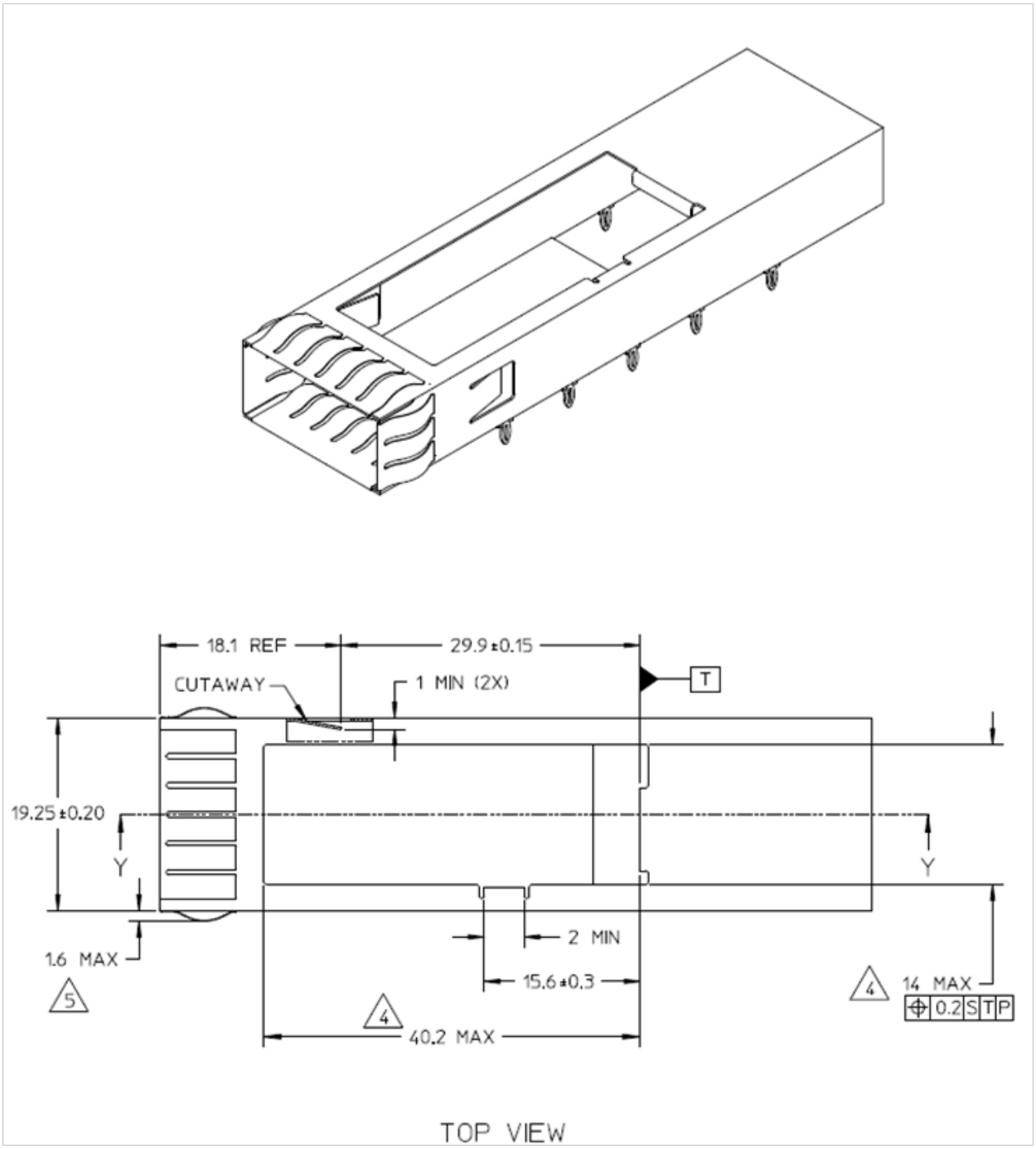
18.1 REF
29.9±0.15
CUTAWAY
1 MIN (2X)
T
19.25±0.20
Y
Y
1.6 MAX
5
2 MIN
15.6±0.3
4
40.2 MAX
4
14 MAX
0.2 S T P
TOP VIEW

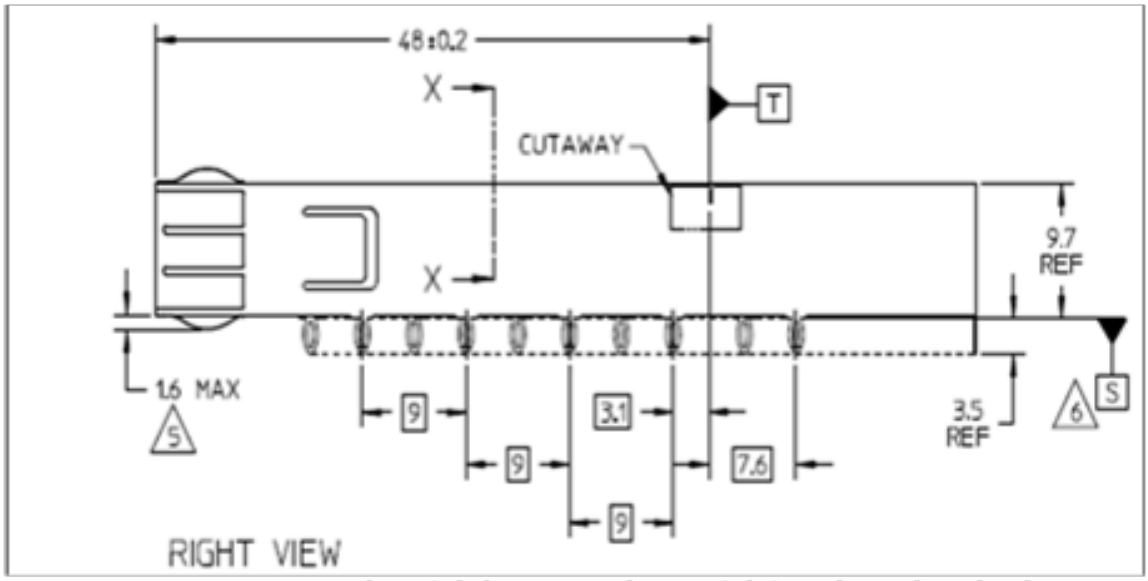

Latch width must be within the shaded area

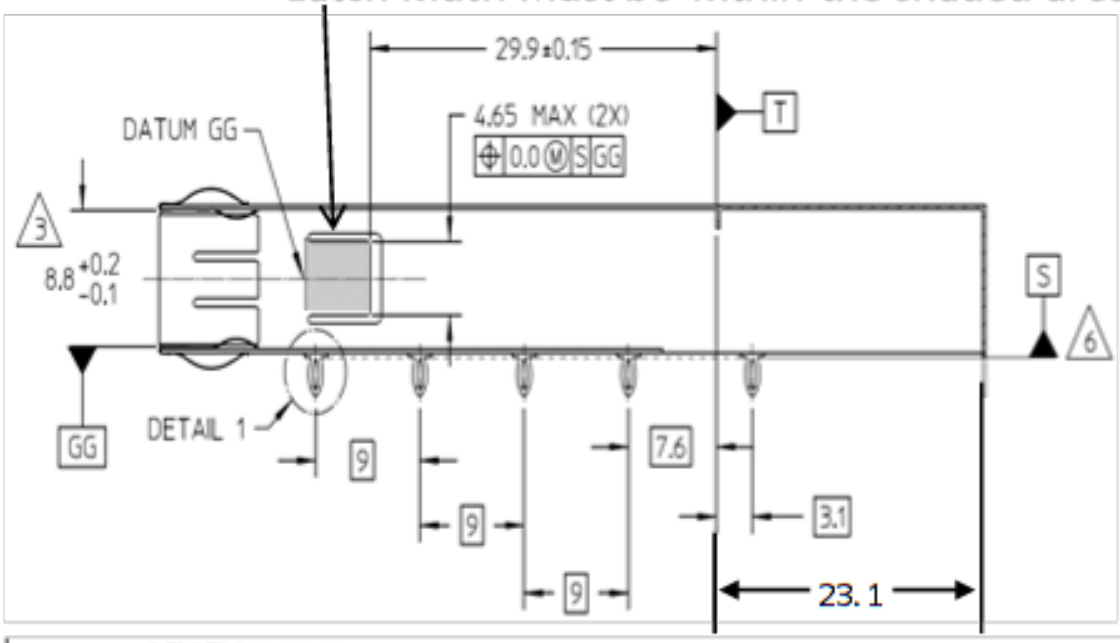

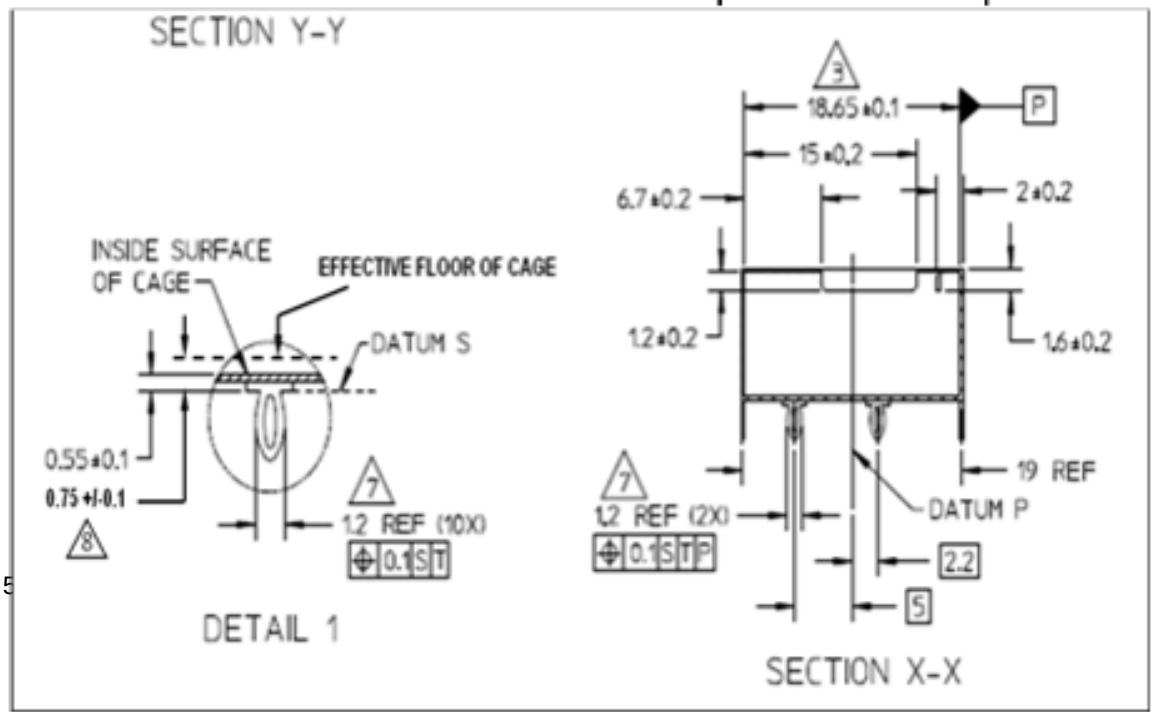

Figure 31: SMT 1x1 Cage Design

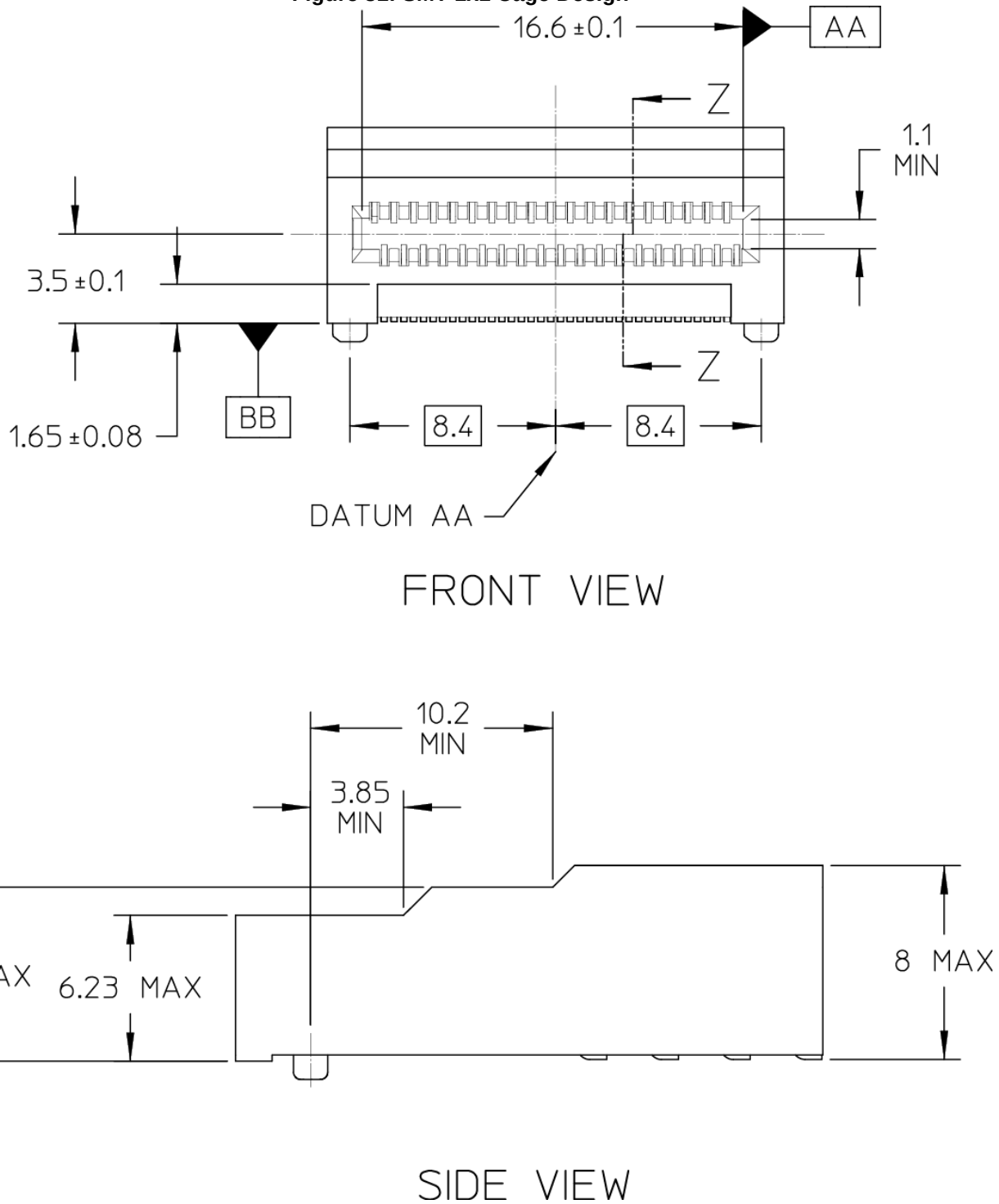

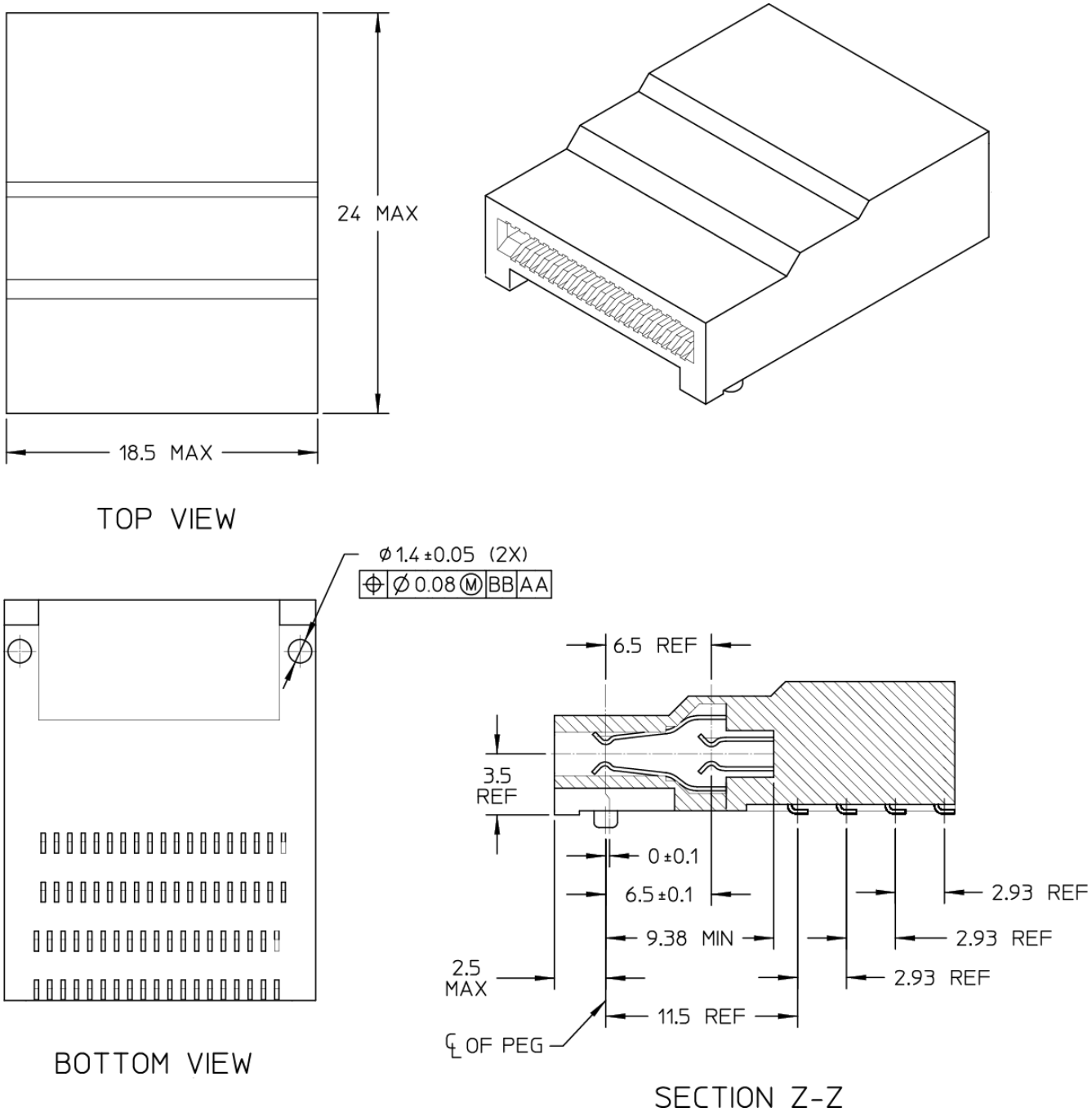

Figure 32: SMT 1x1 Connector Design

Note: Contact Pin Dimension Measured from Datum T

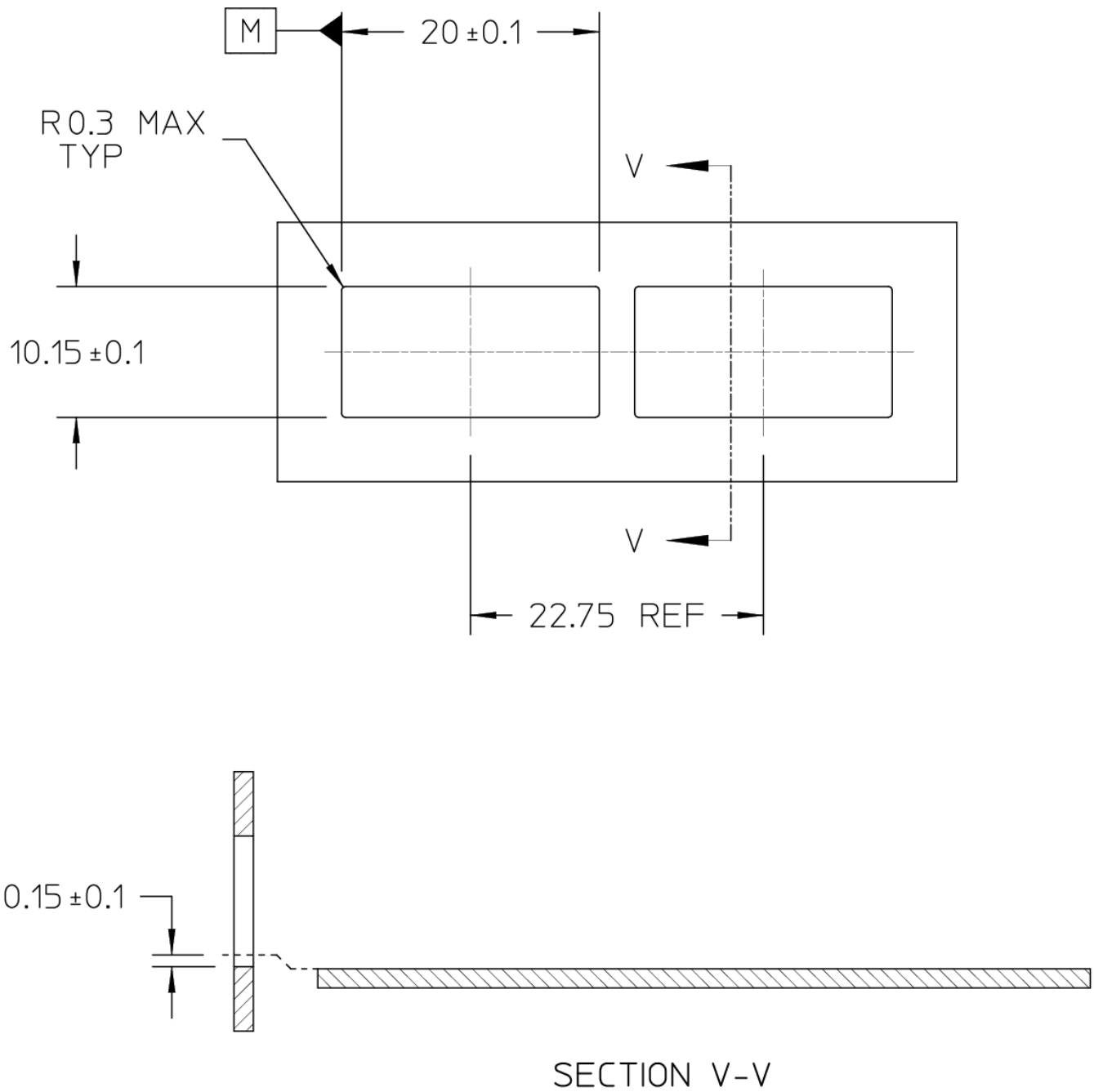

Figure 33: SMT 1x1 bezel opening

5.8.1 Surface mount connector and cage host PCB layout

A typical host board mechanical layout for attaching the QSFP-DD surface mount Connector and Cage System is shown in Figure 34 and
Figure 35. Location of the pattern on the host board is application specific.

To achieve 25-50 Gbps performance pad dimensions and associated tolerances must be adhered to and attention paid to the host board layout.

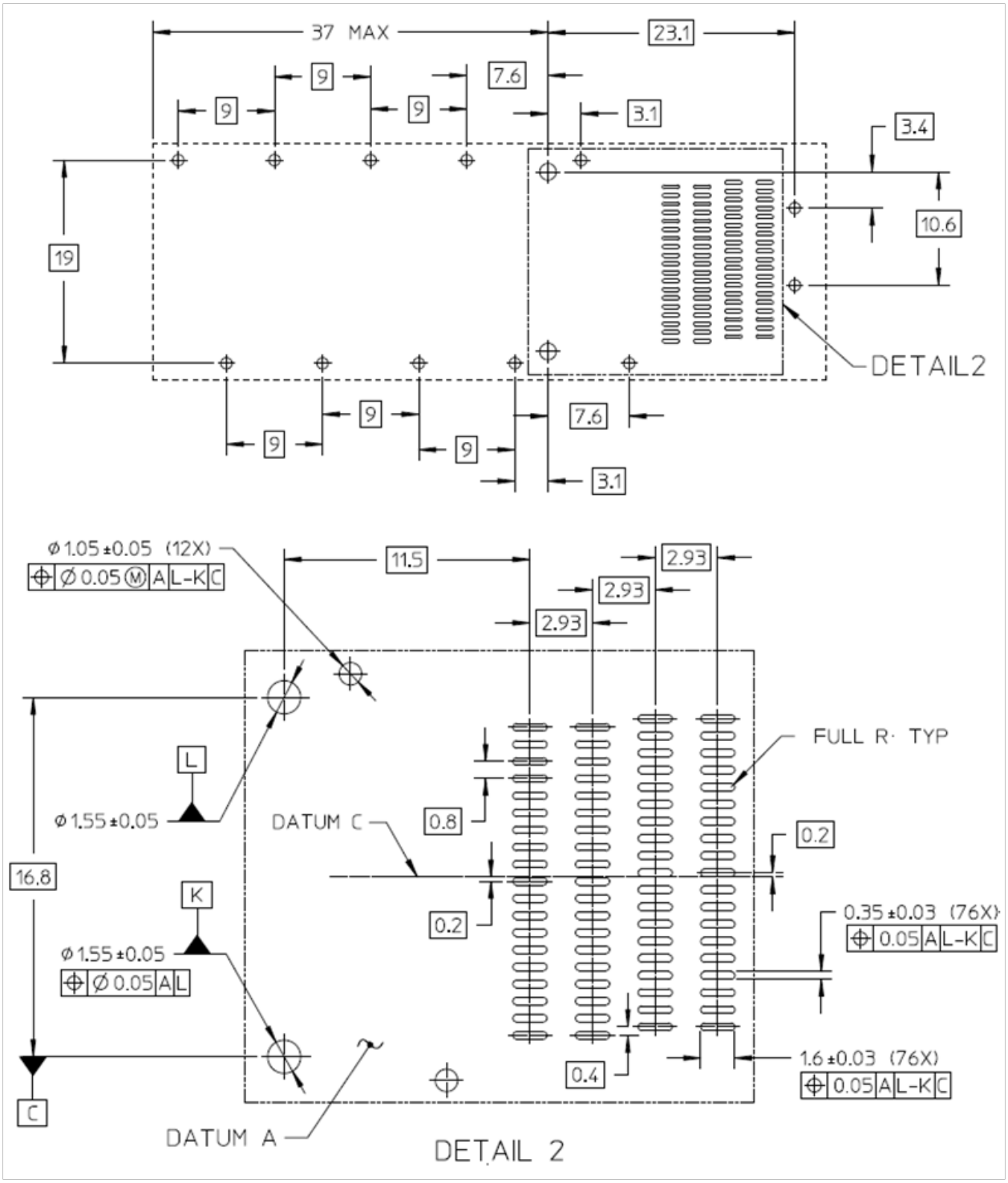

Figure 34: SMT Host PCB Mechanical Layout

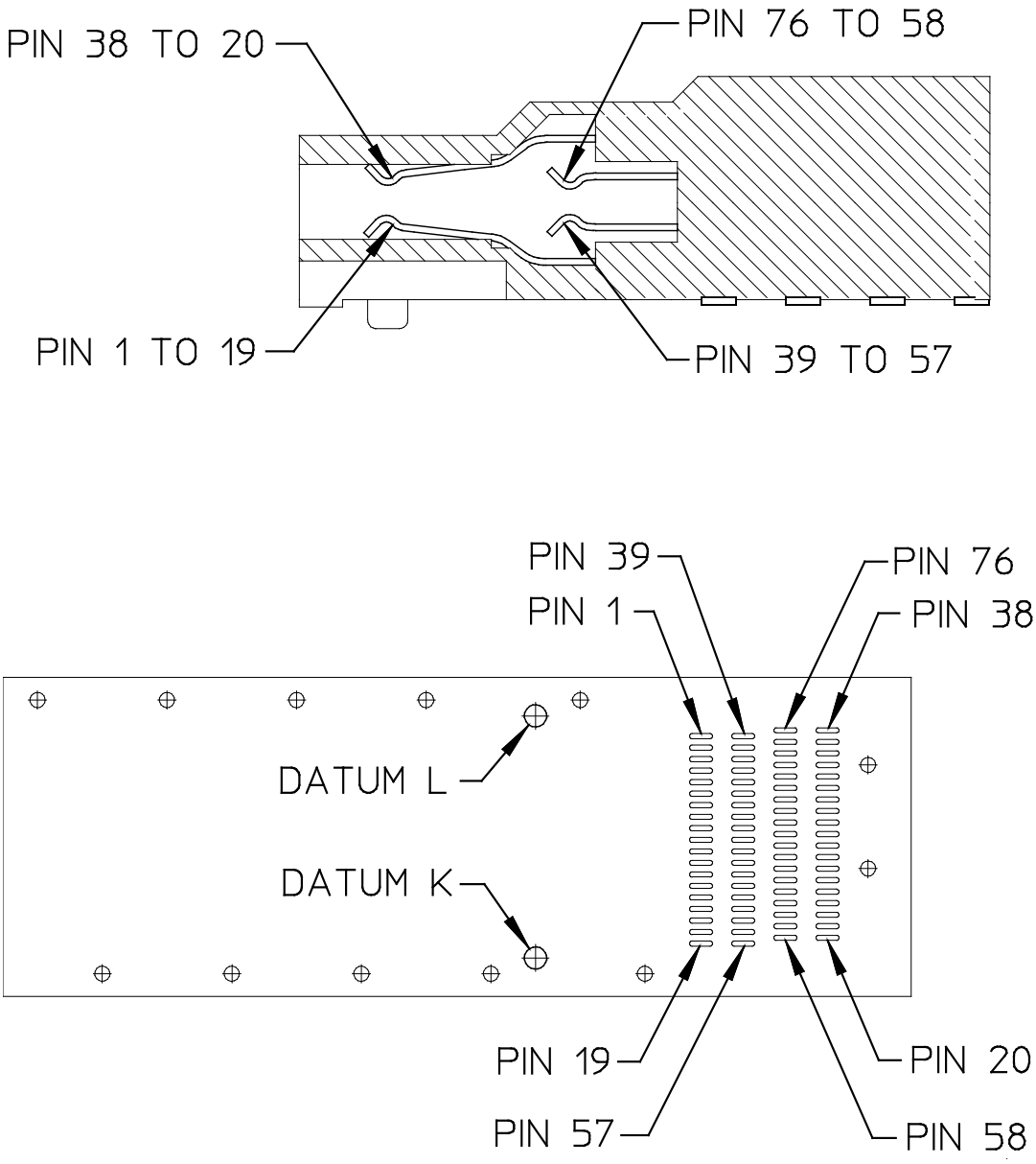

Figure 35: SMT Connector and Host PCB Pin Numbers

5.9 Module Color Coding and Labeling

An exposed feature of the QSFP-DD module (a feature or surface extending outside of the bezel) shall be color coded as follows:

Beige for 850nm
Blue for 1310nm
White for 1550nm

Each QSFP-DD module shall be clearly labeled. The complete labeling need not be visible when the QSFP-DD module is installed and the bottom of the device is the recommended location for the label. Labeling shall include:

Appropriate manufacturing and part number identification
Appropriate regulatory compliance labeling
A manufacturing traceability code

The label should also include clear specification of the external port characteristics such as:

Optical wavelength
Required fiber characteristics (i.e. MMF/SMF)
Operating data rate
Interface standards supported
Link length supported
Connector Type

If required to comply with Section 6.3, a label must be applied to the top external surface of the module case, warning of high touch temperature.

The labeling shall not interfere with the mechanical, thermal or EMI features.

5.10 Optical Interface

Eight examples of the QSFP-DD optical interface port are a male MPO receptacle (see Figure 37, Figure 38 and Figure 39), a dual LC (see Figure 40), a CS connector (see Figure 41), a SN receptacle (see Figure 39), or a MDC receptacle (see Figure 40). The recommended location and numbering of the optical ports for each of the Media Dependent Interfaces is shown in Figure 36. The transmit and receive optical lanes shall occupy the positions depicted in Figure 36 when looking into the MDI receptacle with the connector keyway feature on top.

Note: For some CS, SN, and MDC use cases, less connector ports may be needed. In these cases, Port # 1 is always the left-most port. Successive ports then follow sequentially from left-to-right as shown.

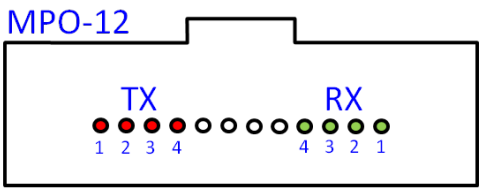

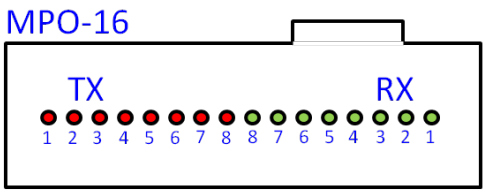

Note: The MPO 12, 2 row optical MDI is used for breakout applications and is not intended for structured cabling applications.

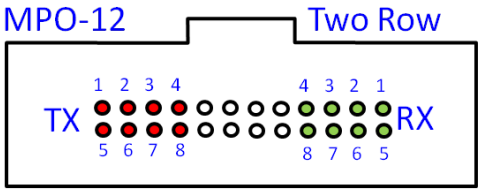

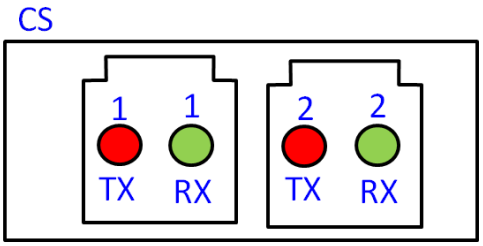

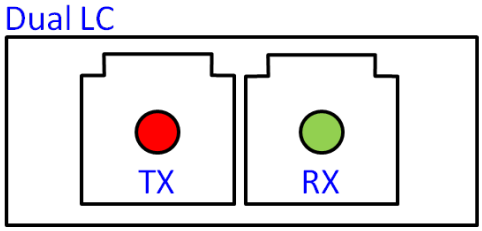

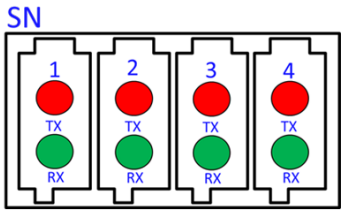

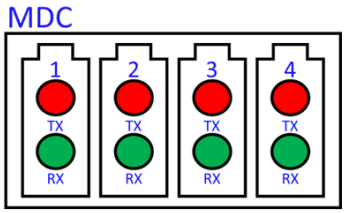

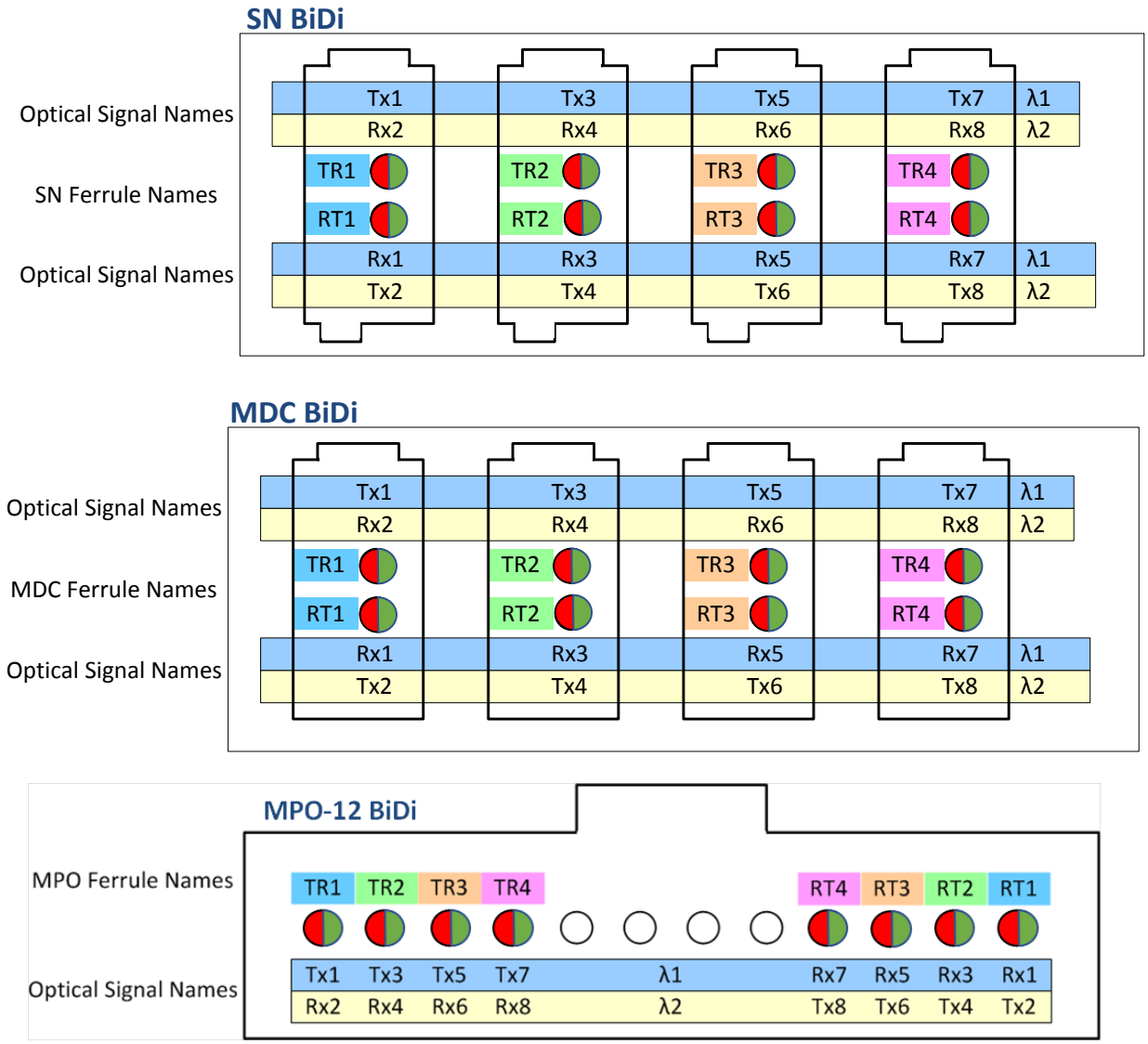

Note: For some CS, SN, and MDC use cases, less connector ports may be needed. In these cases, Port #1 is always the left-most port. Successive ports then follow sequentially from left-to-right as shown.

Figure 36: Optical Media Dependent Interface port assignments

5.10.1 MPO Optical Cable connections

The optical plug and receptacle for the MPO-12 connector is specified in TIA-604-5 and shown in Figure 37 (MPO-12 Single Row)and Figure 39 (MPO-12 Two Row). The optical plug and receptacle for the MPO-16 connector is specified in TIA-604-18 and shown in Figure 38 (MPO-16 Single Row). Note: This specification uses the terms MPO-12 in place of the TIA term MPO and MPO-12 Two Row in place of the TIA term MPO Two Row.

Aligned keys are used to ensure alignment between the modules and the patchcords. The optical connector is orientated such that the keying feature of the MPO receptacle is on the top. Note: Two alignment pins are present in each receptacle.

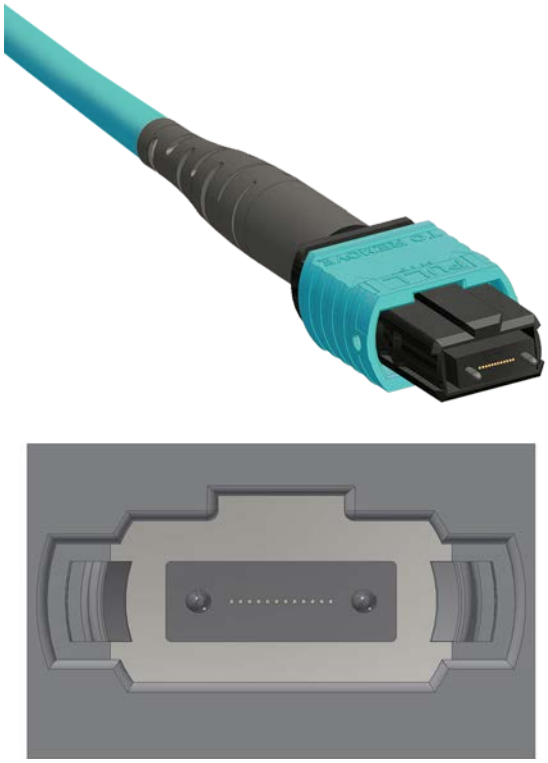

Figure 37: MPO-12 Single Row optical patch cord and module receptacle

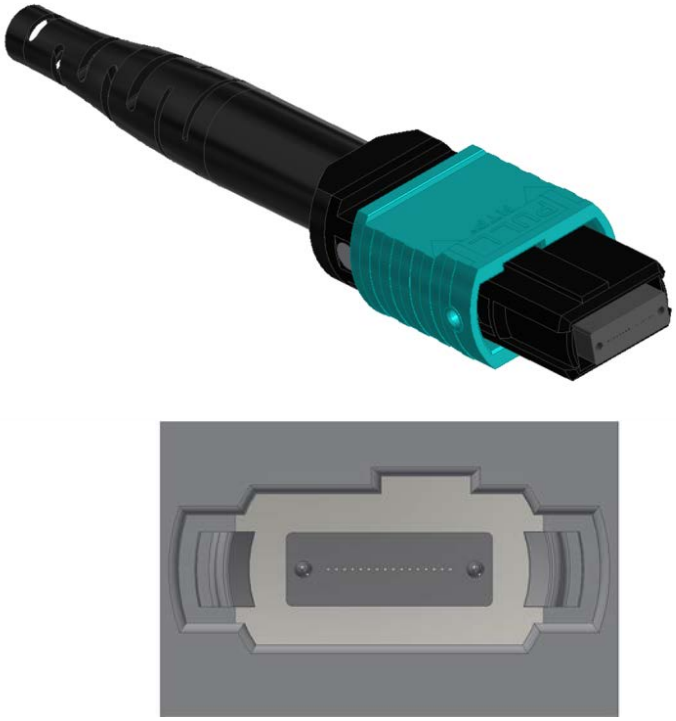

Figure 38: MPO-16 Single Row optical patchcord and module receptacle

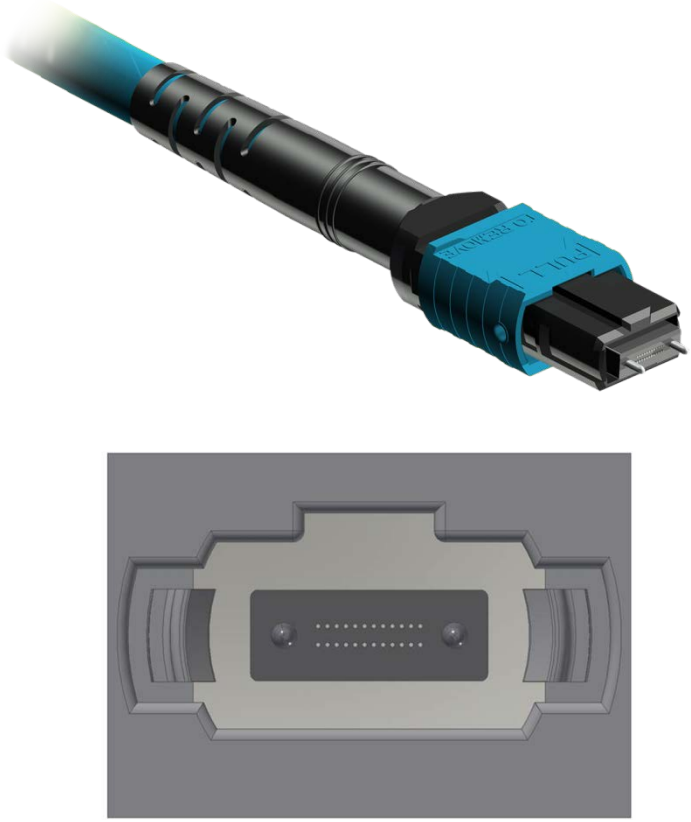

Figure 39: MPO-12 Two Row optical patchcord and module receptacle

5.10.2 Dual LC Optical Cable connection

The Dual LC optical patchcord and module receptacle is specified in TIA-604-10 and shown in Figure 40.

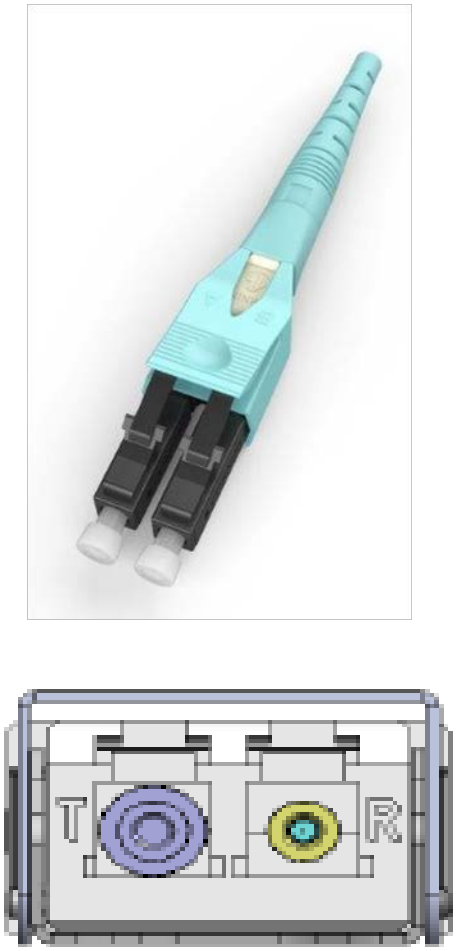

Figure 40: Dual LC optical patchcord and module receptacle

5.10.3 Dual CS Optical Cable connection

The Dual CS optical receptacle for a QSFP-DD module is specified in CS-01242017 (see Industry Documents) and shown in Figure 41.

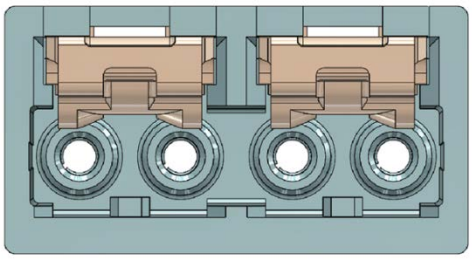

Figure 41: Dual CS connector module receptacle (in support of breakout applications)

5.10.4 SN Optical Cable connections

The SN optical connector and receptacle for QSFP-DD module is specified in SN-60092019 and shown in Figure 42. The top key and offset bottom key are used to ensure alignment between the modules and the patch cords.

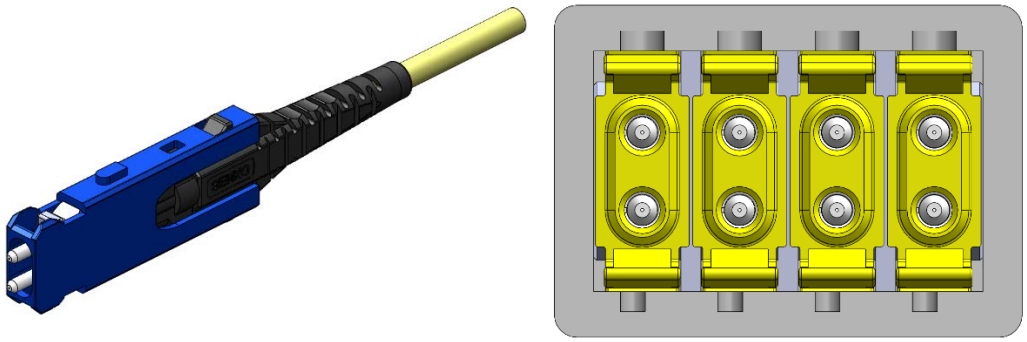

Figure 42: SN optical connector plug and four-port module receptacle

5.10.5 MDC Optical Cable connection

The MDC optical plug and receptacle for a QSFP-DD module is specified in USC-11383001 and shown in Figure 43. The optical connector is orientated such that the keying feature of the MDC receptacle is on the top.

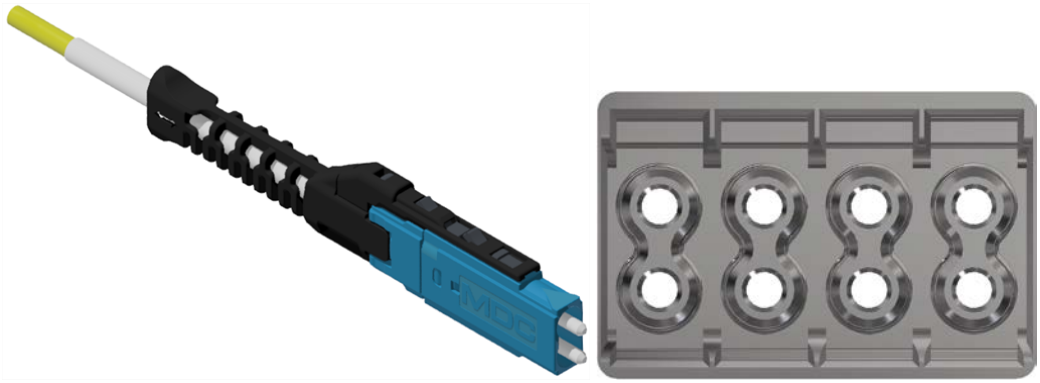

Figure 43: MDC optical connector plug and four-port module receptacle

5.10.6 Electrical data input/output to optical port mapping

Table 11 defines the mapping of electrical TX data inputs and Rx data outputs to optical ports. Note that there is no defined mapping of electrical input/output to optical wavelengths for WDM applications.

Table 11- Electrical Signal to Optical Port Mapping

<table>
<tr><td rowspan="3">Electrical Signal</td><td colspan="5">Optical Port Type (see Figure 36)</td></tr>
<tr><td>LC, CS, SN, MDC</td><td>MPO-12, CS, SN, MDC</td><td>MPO-12, SN, MDC</td><td>MPO-12 (two row) MPO-16</td><td>MPO-12, SN, MDC BiDi</td></tr>
<tr><td>1 TX fiber
1 RX fiber[1]</td><td>2 TX fibers
2 RX fibers[1]</td><td>4 TX fibers
4 RX fibers[1]</td><td>8 TX fibers
8 RX fibers[1]</td><td>8 Tx (Rx) fibers[2]</td></tr>
<tr><td>Tx1</td><td rowspan="8">TX-1</td><td rowspan="4">TX-1</td><td rowspan="2">TX-1</td><td>TX-1</td><td>TR1</td></tr>
<tr><td>Tx2</td><td>TX-2</td><td>RT1</td></tr>
<tr><td>Tx3</td><td rowspan="2">TX-2</td><td>TX-3</td><td>TR2</td></tr>
<tr><td>Tx4</td><td>TX-4</td><td>RT2</td></tr>
<tr><td>Tx5</td><td rowspan="4">TX-2</td><td rowspan="2">TX-3</td><td>TX-5</td><td>TR3</td></tr>
<tr><td>Tx6</td><td>TX-6</td><td>RT3</td></tr>
<tr><td>Tx7</td><td rowspan="2">TX-4</td><td>TX-7</td><td>TR4</td></tr>
<tr><td>Tx8</td><td>TX-8</td><td>RT4</td></tr>
<tr><td>Rx1</td><td rowspan="8">RX-1</td><td rowspan="4">RX-1</td><td rowspan="2">RX-1</td><td>RX-1</td><td>RT1</td></tr>
<tr><td>Rx2</td><td>RX-2</td><td>TR1</td></tr>
<tr><td>Rx3</td><td rowspan="2">RX-2</td><td>RX-3</td><td>RT2</td></tr>
<tr><td>Rx4</td><td>RX-4</td><td>TR2</td></tr>
<tr><td>Rx5</td><td rowspan="4">RX-2</td><td rowspan="2">RX-3</td><td>RX-5</td><td>RT3</td></tr>
<tr><td>Rx6</td><td>RX-6</td><td>TR3</td></tr>
<tr><td>Rx7</td><td rowspan="2">RX-4</td><td>RX-7</td><td>RT4</td></tr>
<tr><td>Rx8</td><td>RX-8</td><td>TR4</td></tr>
<tr><td colspan="6">Note 1: TX-n or RX-n where n is the optical port number as defined in Figure 36.
Note 2: TRn or RTn where n is the optical port number as defined in Figure 36.
Note: For some CS, SN, and MDC use cases, less connector ports may be needed. In these cases, Port #1 is always the left-most port. Successive ports then follow sequentially from left-to-right as shown in Figure 36</td></tr>
</table>

6 Environmental and Thermal

QSFP-DD is designed to allow for up to 36 modules; stacked, ganged and/or belly-to-belly in a 1U 19" rack, with the appropriate thermal design for cooling/airflow.
The equipment supplier is responsible for controlling the module case temperature to the specified range. The module supplier is responsible for defining a point on the module case where the temperature is measured. This should be a point connected to an internal component with the least thermal margin, e.g. a laser diode. It is recommended that the defined point on the module case be behind the equipment faceplate in order to enable in-system monitoring.

6.1 Thermal Requirements

The module case temperature may be within one or more of the case temperatures ranges defined in Table 12. The temperature ranges are applicable between 60 m below sea level and 1800m above sea level, utilizing the host systems designed airflow. For further information see *Telcordia GR-63-CORE, Issue 5, December 2017, NEBS™ Requirements: Physical Protection*.

Table 12- Temperature Range Class of operation

Class	Module Case Temperature
Standard	0°C through 70°C
Extended	-5°C through 85°C
Industrial	-40°C through 85°C

6.2 Thermal Requirements – tighter controlled environments

The classes in Table 13 are intended for tighter controlled environments, e.g. data center environments as described in *"Thermal guidelines for data processing environments", fourth Ed., ASHRAE, 2015.* The four classes correspond to different ranges of equipment intake air temperature.

Table 13- Temperature Range Classes for Tighter Controlled Applications

Class	Module Functional Case Temperature[1]	Module Performance Case Temperature[1]
A1	15°C to 62°C	25°C to 62°C
A2	10°C to 65°C	20°C to 65°C
A3	5°C to 70°C	15°C to 70°C
A4	5°C to 75°C	15°C to 75°C
Note 1: Functional includes all features available in Low Power Mode. Performance means all specifications are met in high power mode.		

6.3 External Case and Handle Touch Temperature

For all power classes, all module case and handle surfaces outside of the cage must comply with applicable touch temperature requirements. If the module case temperature will exceed applicable short-term touch temperature limits, a means must be provided to prevent contact with the case during unlatching and removal. Figure 11, Figure 12 and Appendix A show typical handles used to unlatch and remove the module, thereby limiting contact with the module case. Handles are typically low thermal conductivity elastomer and allow for a higher touch temperature. For more information see "*IEC/UL 60950-1* Requirements for Information Technology Equipment" and "*Telcordia GR-63-CORE, Issue 5, December 2017, NEBS™ Requirements: Physical Protection*".

7 Management Interface

A management interface, as already commonly used in other form factors like QSFP, SFP, and CDFP, is specified in order to enable flexible use of the module by the user. The memory map for QSFP-DD is found in the 'Common Management Interface Specification for 8x/16x pluggable transceivers' (see www.QSFP-DD.com). Some timing requirements are critical, especially for a multi-channel device, so the interface speed may optionally be increased. Byte 00h on the Lower Page or Address 128 Page 00h is used to indicate the use of the QSFP-DD memory map rather than the QSFP memory map. When a legacy QSFP28 module is inserted into a QSFP-DD port the legacy QSFP memory map (i.e. SFF-8636) must be used. This case is outside the scope of this document.

In some applications, muxing or demuxing may occur in the module. In this specification, all references to channel numbers are based on the electrical connector interface channels, unless otherwise indicated. In cases where a status or control aspect is applicable only to channels after muxing or demuxing has occurred, the status or control is intended to apply to all channels in the mux group, unless otherwise indicated.

7.1 SCL, SDA and ModSEL Timing Specification

7.1.1 Introduction

Low speed signaling is based on Low Voltage CMOS (LVCMOS) operating at Vcc. Hosts shall use a pull-up resistor connected to Vcc_host on the 2-wire interface SCL (clock) and SDA (Data) signals. Detailed electrical specifications are given in section 4.1.2. Nomenclature for all registers more than 1 bit long is MSB-LSB.

7.1.2 Management Interface Timing Specification

The timing requirements are shown in Figure 44 and specified in Table 14.
QSFP-DD is positioned to leverage 2-wire timing (Fast Mode devices) to align the use of related cores on host ASICs. The default clock rate is a maximum of 400 kHz with an option to support up to a maximum of 1 MHz. This subsection closely follows the QSFP SFF-8636 specification.

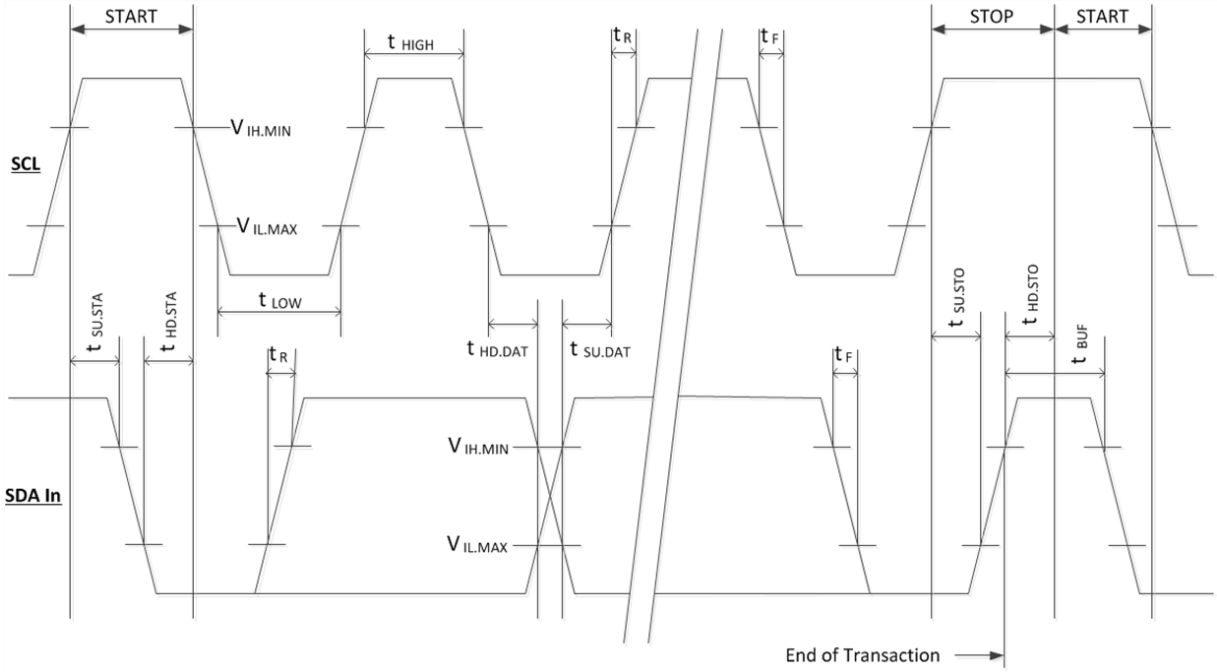

Figure 44: QSFP-DD Timing Diagram

The 2-wire serial interface address of the QSFP-DD module is 1010000X (A0h). In order to allow access to multiple QSFP-DD modules on the same 2-wire serial bus, the QSFP-DD includes a module select pad, ModSelL. This input (which is pulled high, deselected in the module) must be held low by the host to select the module of interest and allow communication over the 2-wire serial interface. The module must not respond to or accept 2-wire serial bus instructions unless it is selected.
Before initiating a 2-wire serial bus communication, the host shall provide setup time on the ModSelL line of all modules on the 2-wire bus. The host shall not change the ModSelL line of any module until the 2-wire serial bus communication is complete and the hold time requirement is satisfied.

7.1.3 Serial Interface Protocol

7.1.3.1 Management Timing Parameters

The timing parameters for the 2-Wire interface to the QSFP-DD module and the QSFP-DD memory transaction timings are shown in Table 14. Tradeoffs between pull-up resistor values, bus capacitance and rise time are shown in Figure 45.

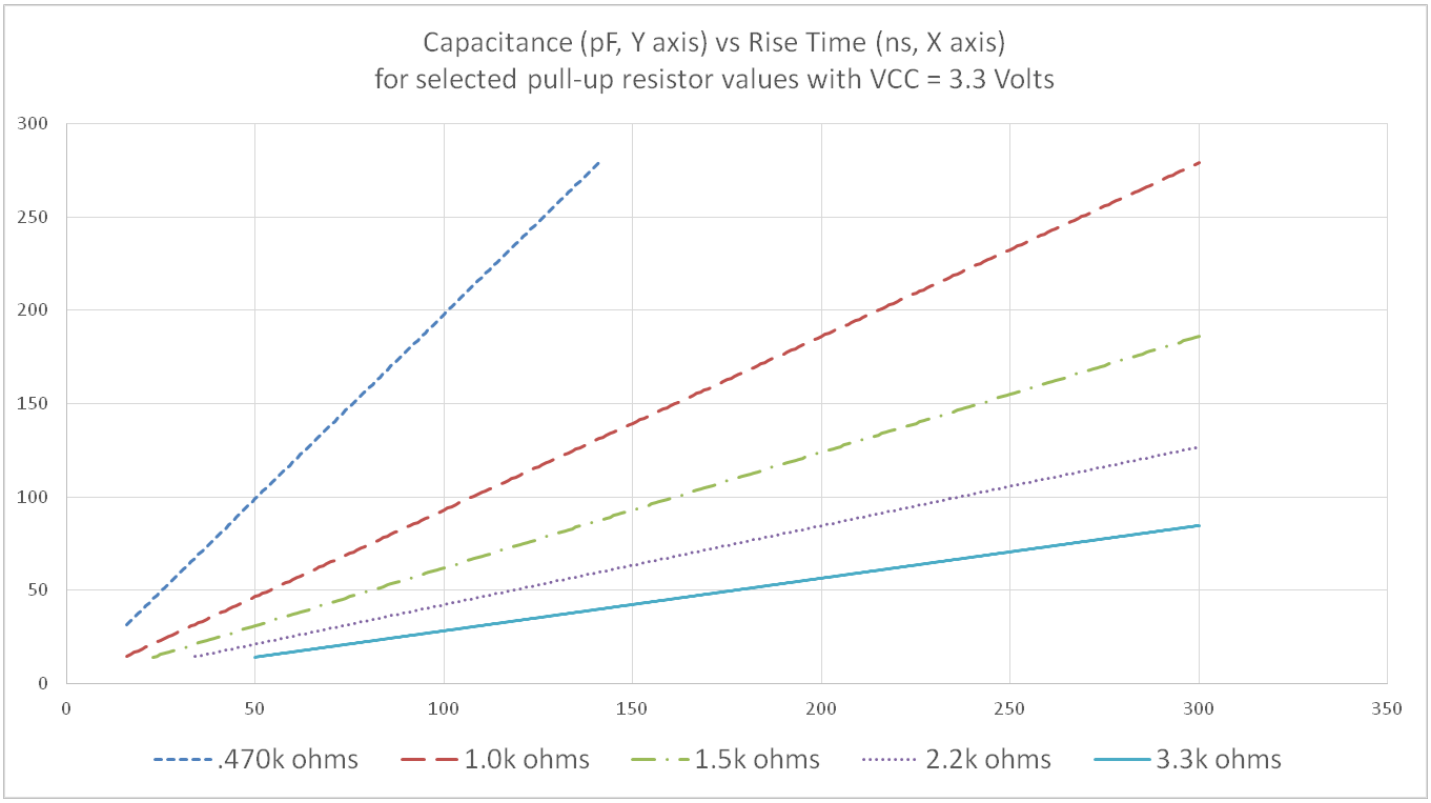

Figure 45: SDA/SCL options for pull-up resistor, bus capacitance and rise/fall times

Table 14- Management Interface timing parameters

		Fast Mode (400 kHz)		Fast Mode Plus (1 MHz)			
Parameter	Symbol	Min	Max	Min	Max	Unit	Conditions
Clock Frequency	fSCL	0	400	0	1000	kHz	
Clock Pulse Width Low	tLOW	1.3		0.50		µs	
Clock Pulse Width High	tHIGH	0.6		0.26		µs	
Time bus free before new transmission can start	tBUF	20		1		µs	Between STOP and START and between ACK and ReStart
START Hold Time	tHD.STA	0.6		0.26		µs	The delay required between SDA becoming low and SCL starting to go low in a START
START Setup Time	tSU.STA	0.6		0.26		µs	The delay required between SCL becoming high and SDA starting to go low in a START
Data In Hold Time	tHD.DAT	0		0		µs	
Data In Setup Time	tSU.DAT	0.1		0.1		µs	
Input Rise Time	tR		300		120	ns	From (VIL,MAX=0.3*Vcc) to (VIH, MIN=0.7*Vcc)
Input Fall Time	tF		300		120	ns	From (VIH,MIN=0.7*Vcc) to (VIL,MAX=0.3*Vcc)
STOP Setup Time	tSU.STO	0.6		0.26		µs	
STOP Hold Time	tHD.STO	0.6		0.26		µs	
Aborted sequence – bus release	Deselect _Abort		2		2	ms	Delay from a host de-asserting ModSelL (at any point in a bus sequence) to the QSFP-DD module releasing SCL and SDA
ModSelL Setup Time[1]	tSU. ModSelL	2		2		ms	ModSelL Setup Time is the setup time on the select line before the start of a host initiated serial bus sequence.
ModSelL Hold Time[1]	tHD. ModSelL	2		2		ms	ModSelL Hold Time is the delay from completion of a serial bus sequence to changes of module select status.
Serial Interface Clock Holdoff "Clock Stretching"	T_clock_ hold		500		500	us	Maximum time the QSFP-DD module may hold the SCL line low before continuing with a read or write operation
Complete Single or Sequential Write to non-volatile registers	tWR		80		80	ms	Complete Write of up to 8 Bytes
Accept a single or sequential write to volatile memory.	tNACK		80		80	ms	Time required for the module to accept a single or sequential write to volatile memory.
Endurance (Write Cycles)		50K			50k	cycl es	Module Case Temperature = 70^0 C
Note 1: When the host has determined that module is QSFP-DD, the management registers can be read to determine alternate supported ModSelL set up and hold times.							

Appendix A Informative overall module length with elastomeric handle

Figure 46 and Figure 47 show flexible elastomeric handles attached to the module latches. Handle ends for Types 1 and Type 2 modules should be aligned independent of module case extension. Type 1 modules should meet the overall length of 118mm maximum per Figure 46 with a handle length of approximately 50mm. Type 2 modules should comply with Figure 47 and have reduced handle length equal to the module case length extension

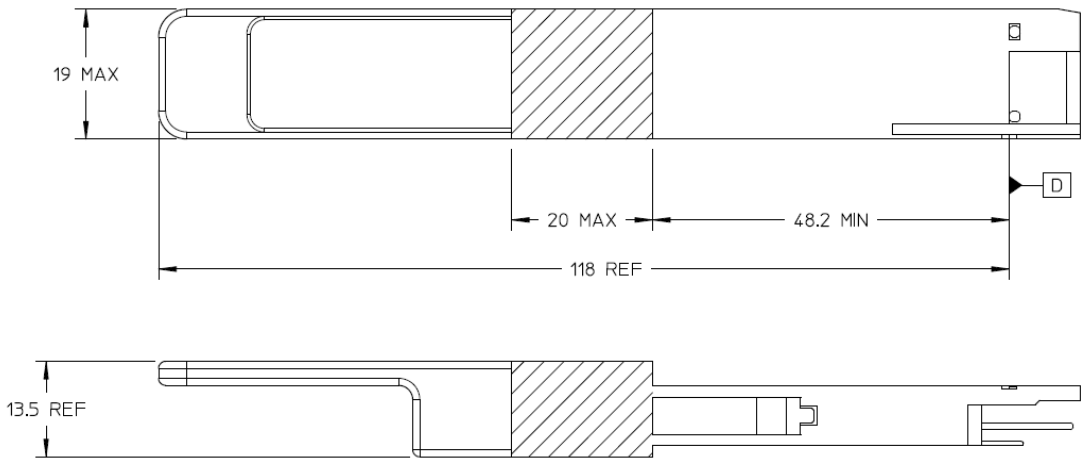

Figure 46: Informative overall module length with handle for Type 1 module

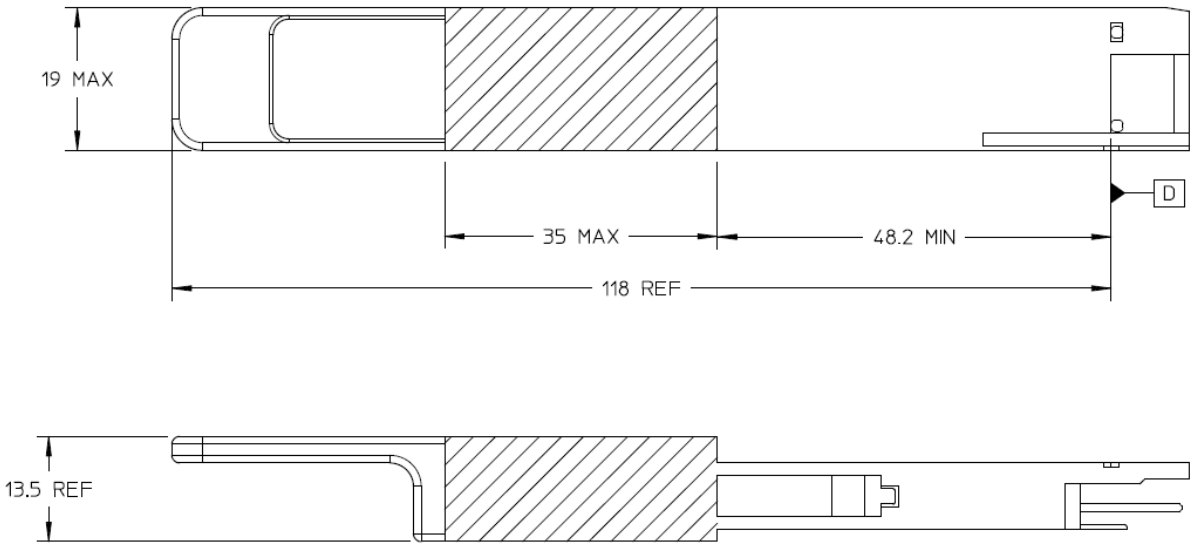

Figure 47: Informative overall module length with handle for Type 2 and Type 2A modules

Appendix B Module Type 2A Heat Sink Examples

This appendix contains examples of designs for higher power Type 2A modules with heat sinks.

Thermal design is system dependent; however, systems seeking to maximize the benefit of the external heat sink of Type 2A modules should consider minimizing bypass of airflow through the external heat sink. One potential method is to use a minimal gap between the outer surface of the front panel and the trailing edge of the external heat sink fins as shown in Appendix B, Figure B-1 below.

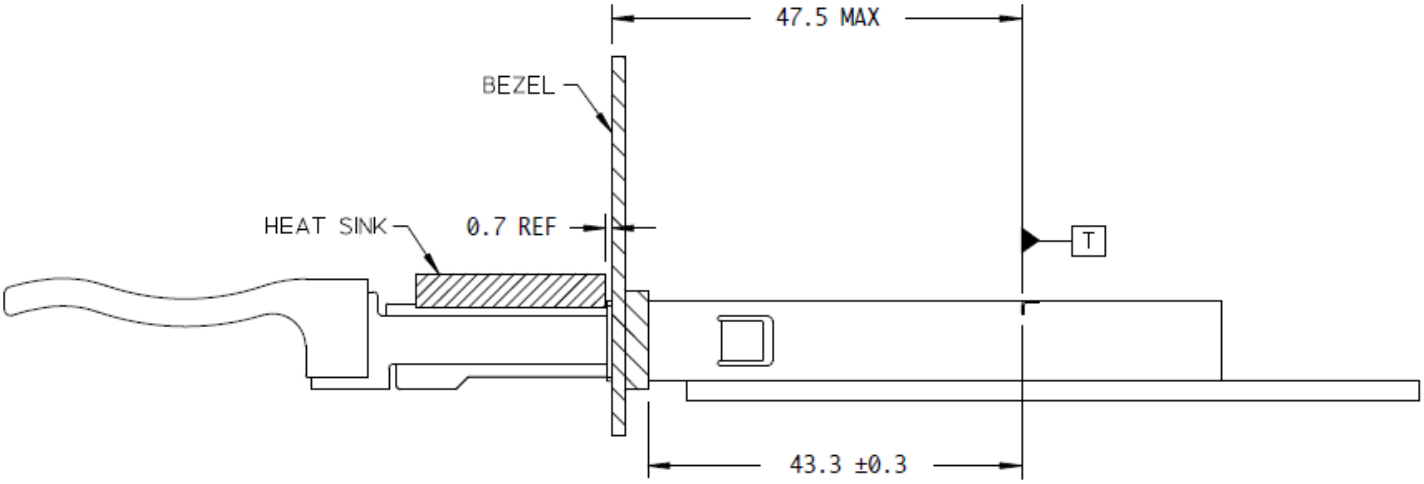

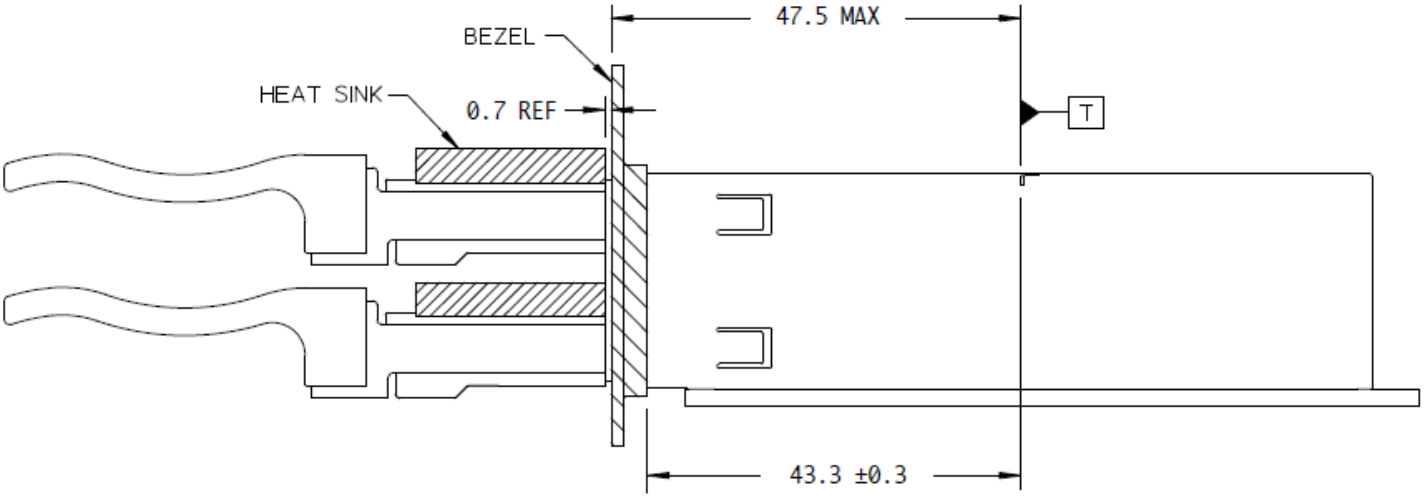

Figure B-1: Type 2A example module insertion

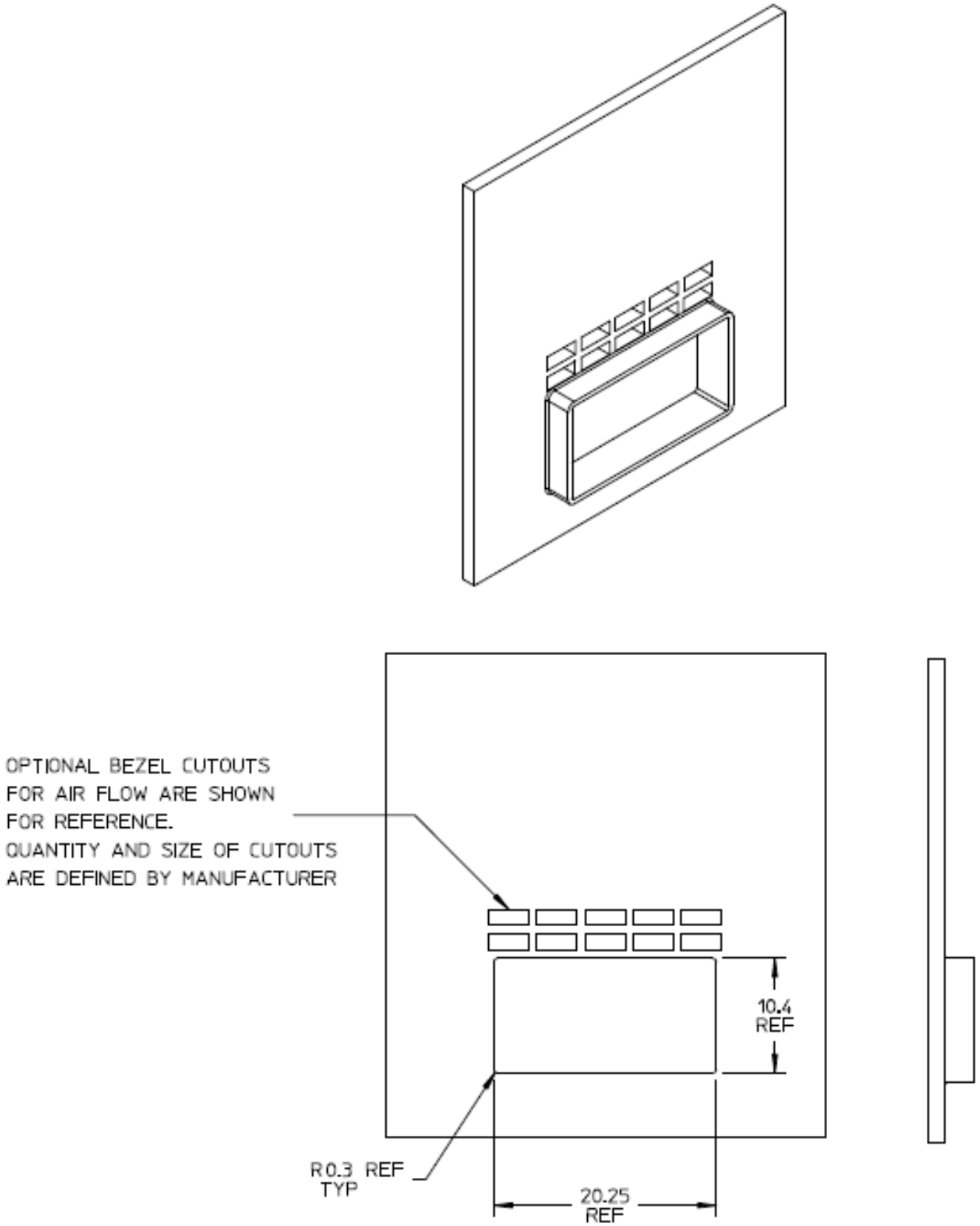

Figure B-2: Type 2A example 1X1 bezel design

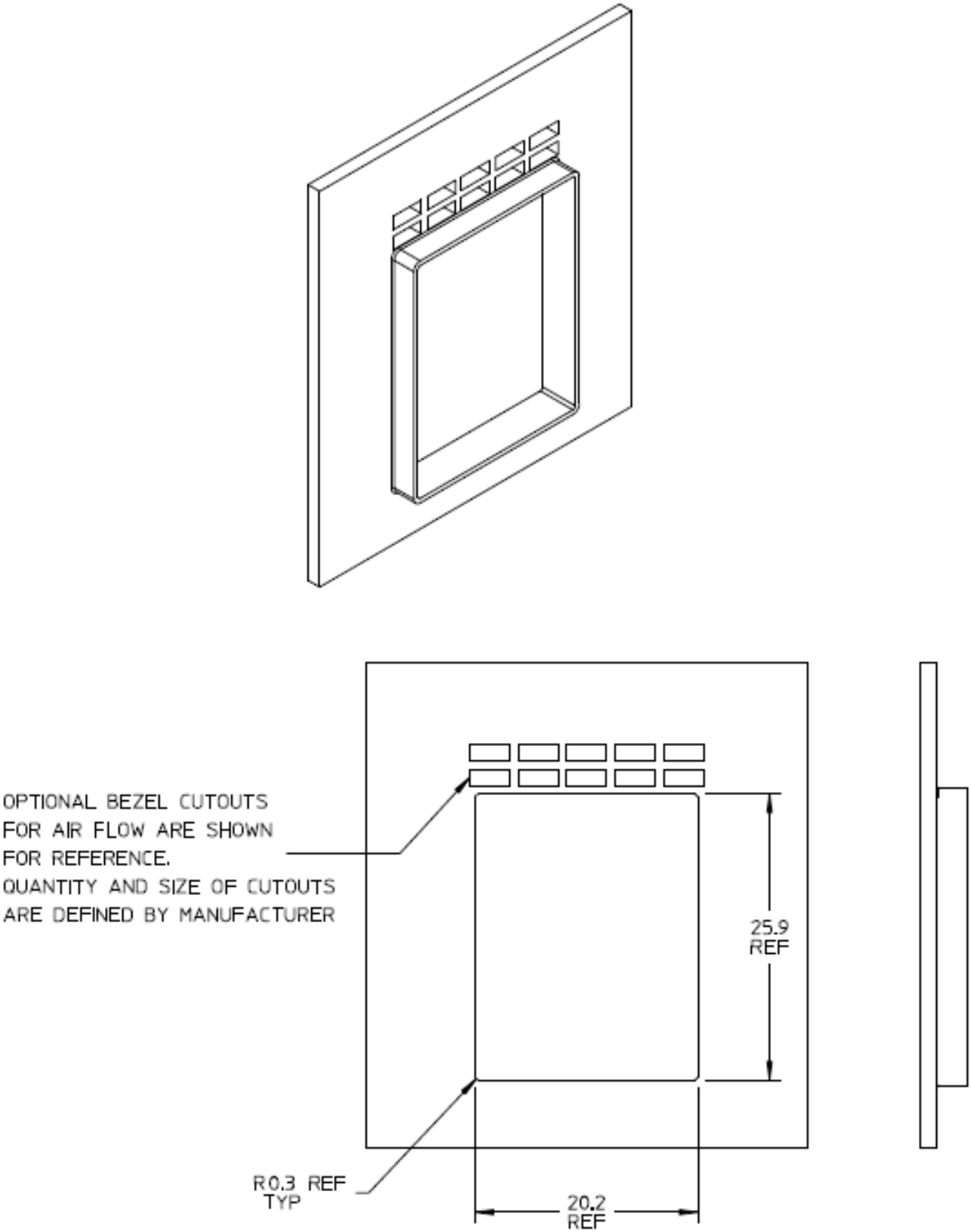

Figure B-3: Type 2A example 2X1 bezel design

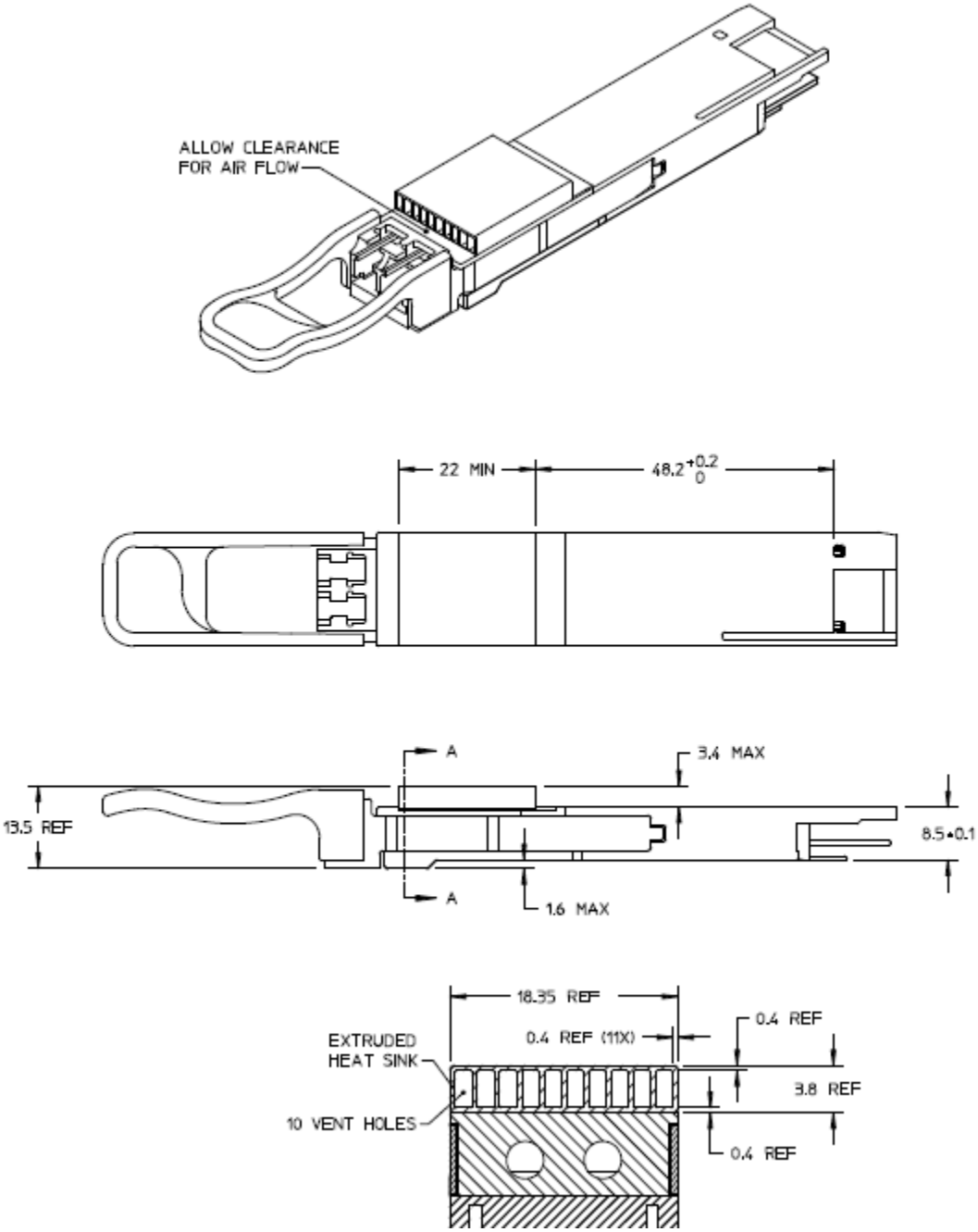

Figure B-4: Type 2A Extruded Heat Sink Example

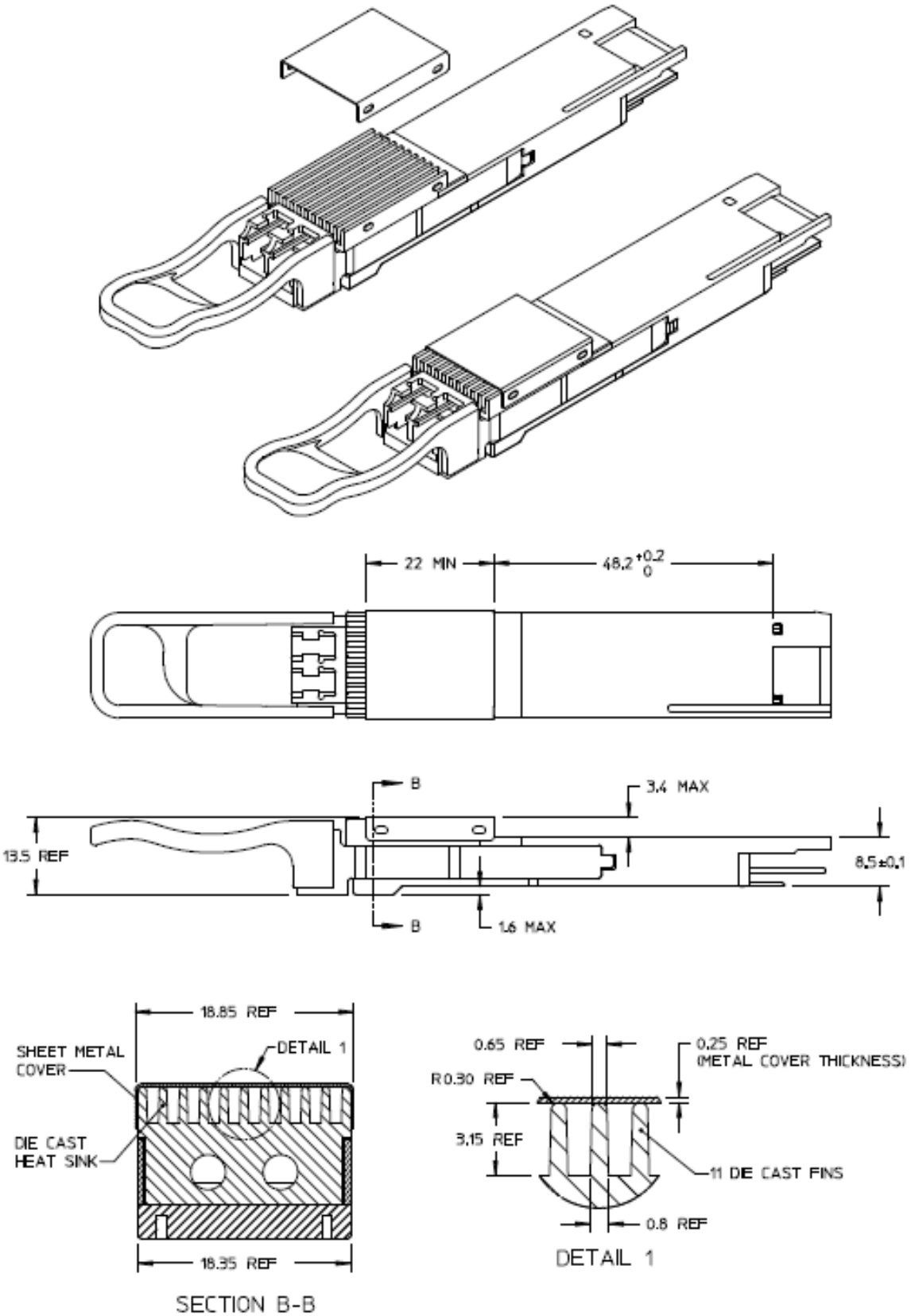

Figure B-5: Type 2A Die Cast Heat Sink with Metal Cover Example

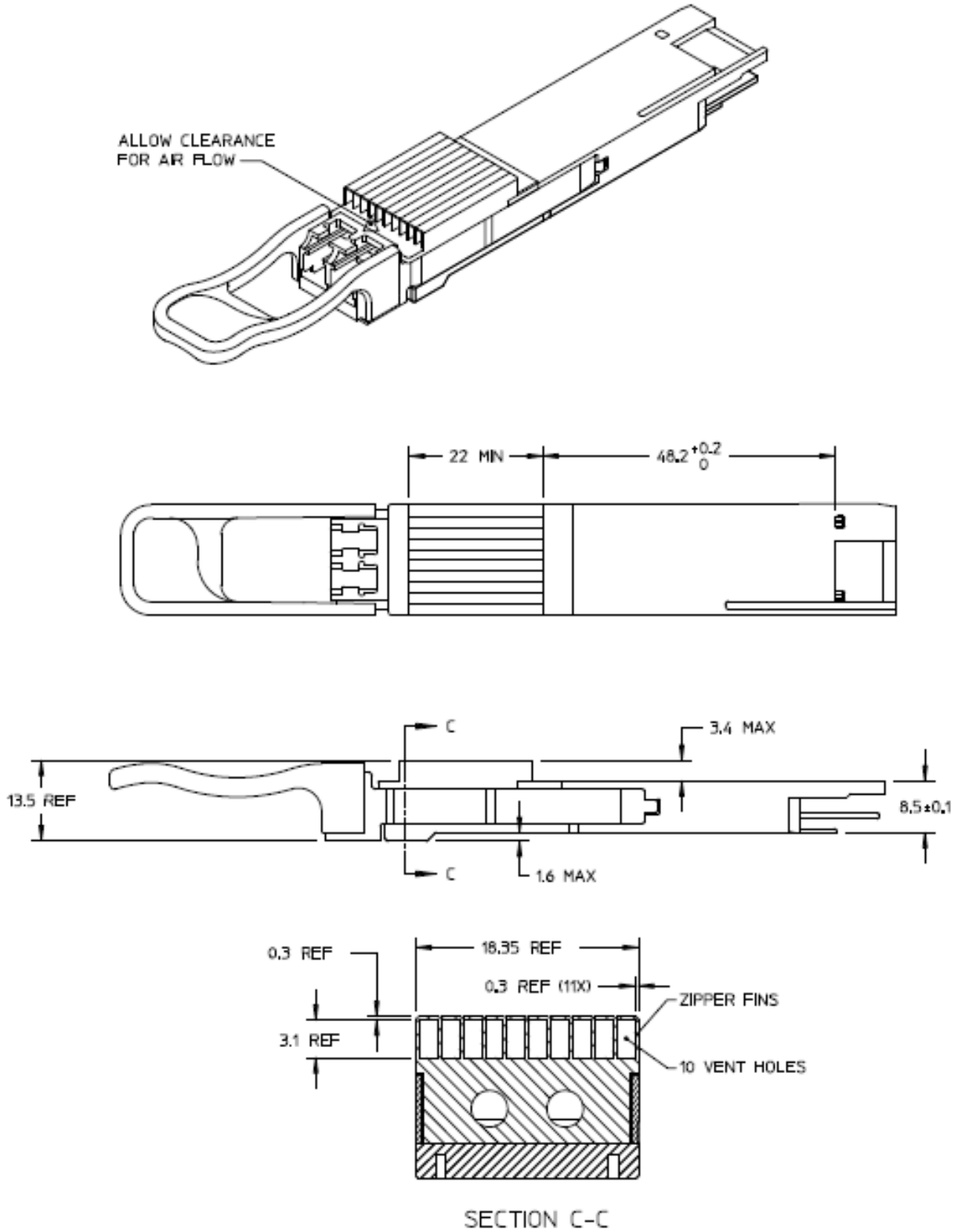

Figure B-6: Type 2A Zipper Fin Heat Sink Example

End of Document