IN THE UNITED STATES PATENT AND TRADEMARK OFFICE

BEFORE THE PATENT TRIAL AND APPEAL BOARD

T-MOBILE US, INC., AT&T MOBILITY LLC, CELLCO PARTNERSHIP
D/B/A VERIZON WIRELESS, ERICSSON INC. AND
NOKIA OF AMERICA CORPORATION,
Petitioners,

v.

SMART RF INC.,
Patent Owner.

U.S. Patent No. 9,641,204
Issue Date: May 2, 2017

DIGITAL MULTI-BAND PREDISTORTION LINEARIZER
WITH NONLINEAR SUBSAMPLING ALGORITHM IN THE FEEDBACK
LOOP

Inter Partes Review No.: IPR2025-00692

PETITION FOR *INTER PARTES* REVIEW OF U.S. PATENT 9,641,204
UNDER 35 U.S.C. §§311-319 and 37 C.F.R. §§42.1-.80, 42.100-.107

***Mail Stop* "*PATENT BOARD*"**
Patent Trial and Appeal Board
U.S. Patent and Trademark Office
P.O. Box 1450

TABLE OF CONTENTS

Page

I. INTRODUCTION 1
II. OVERVIEW 1
III. GROUNDS FOR STANDING UNDER 37 C.F.R. § 42.104(a) 5
IV. RELIEF REQUESTED (37 C.F.R. §42.22(a)) 5
V. REASONS FOR THE RELIEF REQUESTED 6
A. State of the Art 6
1. Digital Predistortion ("DPD") 6
2. Direct and Indirect Predistortion 8
3. Nyquist-Rate Sampling and Subsampling 9
B. Summary of the '204 Patent 12
C. Summary of the Prosecution History 16
D. Claim Construction 17
E. Priority Date 20
F. Person of Ordinary Skill in the Art 20
VI. IDENTIFICATION OF CHALLENGES 20
A. Challenged Claims 20
B. Statutory Grounds for Challenges 20
VII. IDENTIFICATION OF HOW THE CLAIMS ARE UNPATENTABLE 21
A. Ground 1: Claims 1-15 are Obvious over Peroulas Alone or in View of Cidronali 21
1. Peroulas 21
2. Cidronali 22
3. Motivation to Combine the Teachings of Peroulas with the Teachings of Cidronali 24
4. Detailed Application to the Challenged Claims 29
B. Ground 2: Claims 1-15 are Obvious over Posti Alone or in View of Cidronali. 56

1. Posti 56
2. Motivation to Modify the Teachings of Posti with the Teachings of Cidronali 57
3. Detailed Application to the Challenged Claims 61

VIII. THE BOARD SHOULD NOT EXERCISE ITS DISCRETION TO DENY INSTITUTION 89
A. The Board Should Not Deny Review Under 35 U.S.C. § 325(d) 89
B. The Board Should Not Deny Review Under 35 U.S.C. § 314(a) 90

IX. MANDATORY NOTICES – 37 C.F.R. § 42.8 92
A. Real Parties-In-Interest Under 37 C.F.R. § 42.8(b)(1) 92
B. Related Matters Under 37 C.F.R. § 42.8(b)(2) 93
C. Lead and Back-Up Counsel Under 37 C.F.R. § 42.8(b)(3) 94
D. Service Information Under 37 C.F.R. § 42.8(b)(4) 94
E. Payment of Fees – 37 C.F.R. § 42.103 94

X. CONCLUSION 95

XI. CERTIFICATE OF WORD COUNT i

IPR2025-00612
Petitioners Exhibit 1034
Page 3 of 108

TABLE OF AUTHORITIES

Federal Cases

Game & Tech. Co. v. Activision Blizzard Inc., 926 F.3d 1370 (Fed. Cir. 2019) 42, 70

KSR Int'l Co. v. Teleflex Inc., 550 U.S. 398 (2007) 26, 45, 59

Skedco, Inc. v. Strategic Operations, Inc., 287 F. Supp. 3d 1100 (D. Or. 2018) 25

PTAB Cases

Apple Inc. v. Fintiv, Inc., Case IPR2020-00019, Paper 11 (March 20, 2020).....90

Dish Network v. Broadband iTV, IPR2020-01280, Paper 17 (Feb. 4, 2021) 91

HP Inc. v. Slingshot Printing LLC, IPR2020-01084, Paper 13 (Jan. 14, 2021).....91

Sotera Wireless, Inc. v. Masimo Corp., IPR2020-01019, Paper 12 (Dec. 1, 2020) 91

Federal Statutes

35 U.S.C. § 102 .....20, 21

35 U.S.C. §§311 *et seq*.....1

Regulations

37 C.F.R. §§42.1 *et seq*.....1

37 C.F.R. §42.106 5

37 C.F.R. §42.108 5

PETITIONERS' EXHIBIT LIST

Ex. No.	Brief Description
1001	U.S. Patent No. 9,641,204 ("the '204 Patent")
1002	Prosecution History for U.S. Patent No. 9,641,204
1003	Expert Declaration of James Proctor under 37 C.F.R. § 1.68
1004	*Curriculum Vitae* of James Proctor
1005	World Intellectual Property Organization International Publication No. WO 2012/129768 to James Peroulas, Filing Date of March 28, 2011 and Publication Date October 4, 2012 ("Peroulas")
1006	Alessandro. Cidronali, "A New Approach for Concurrent Dual-Band IF Digital PreDistortion: System Design and Analysis," 2008 Workshop on Integrated Nonlinear Microwave and Millimetre-Wave Circuits (January 2009), ("Cidronali")
1007	Declaration of Julie Ann Munford
1008	Dennis Morgan, "A Generalized Memory Polynomial Model for Digital Predistortion of RF Power Amplifiers," IEEE Transactions on Signal Processing, vol. 54, no. 10, (October 2006), ("Morgan")
1009	U.S. Patent No. 6,999,523 ("Posti")
1010	Nazim Ceylan, "Linearization of Power Amplifiers by Means of Digital Predistortion" (2005) ("Ceylan")
1011	Excerpts from Zhurbenko *et al*., Advanced Microwave Circuits and Systems (2010), ("Zhurbenko")
1012	Henna Paaso, "Comparison of Direct Learning and Indirect Learning Predistortion Architectures," 2008 IEEE International Symposium on Wireless Communication Systems (2008), ("Paaso")
1013	Dayong Zhou, "Novel Adaptive Nonlinear Predistorters Based on the Direct Learning Algorithm," *IEEE Transactions on Signal Processing*, vol. 55, no. 1, (Jan. 2007), ("Zhou")
1014	Youngcheol Park, "Adaptive Predistortion Linearization of RF Power Amplifiers Using Lookup Tables Generated from Subsampled Data," 2002 IEEE Radio and Wireless Conference (2002), ("Park")

Ex. No.	Brief Description
1015	*Reserved*
1016	Excerpts from Qizheng Gu, RF System Design of Transceivers for Wireless Communications (Springer 2005), ("Gu")
1017	Docket Control Order, *Smart RF Inc. v. AT&T Mobility LLC et al.*, Case No. 2:24-cv-00195-JRG, Dkt. No. 41 (E.D. Tex. June 21, 2024)
1018	Federal Court Management Statistics - Profiles, June 30, 2024, *available at* https://www.uscourts.gov/sites/default/files/2024-11/fcms_na_distprofile0630_2024.pdf
1019	U.S. Patent No. 7,110,732 ("Mostafa")
1020	Rim Barrak, "Optimized Multistandard RF Subsampling Receiver Architecture," IEEE Transactions on Wireless Communications (2009), ("Barrak")
1021	Sungho Choi, "Design of Digital Predistorters for Multi-Band Signals," Proceedings of the Second APSIPA Annual Summit and Conference (2010), ("Choi")
1022	Letter to Smart RF re: *Sotera* Stipulation
1023	Excerpts from IEEE Std 100-2000, The Authoritative Dictionary of IEEE Standards Terms, Seventh Edition (2000)
1024	R. Venkataramani and Y. Bresler, "Perfect reconstruction formulas and bounds on aliasing error in sub-Nyquist nonuniform sampling of multiband signals," in IEEE Transactions on Information Theory, vol. 46, no. 6, pp. 2173-2183, (Sept. 2000)
1025	R. Venkataramani, "Sub -Nyquist multicoset and MIMO sampling: Perfect reconstruction, performance analysis, and necessary density conditions," University of Illinois at Urbana-Champaign ProQuest Dissertations & Theses (2001).
1026	Allen Katz, "Linearization: Reducing Distortion in Power Amplifiers," IEEE Microwave Magazine (2001), ("Katz")
1027	Lei Ding, Raviv Raich, *et al.*, "A Hammerstein Predistortion Linearization Design Based on the Indirect Learning Architecture," 2002 IEEE International Conference on Acoustics, Speech, and Signal Processing (2002), ("Raich")

Ex. No.	Brief Description
1028	Lei Ding, "Digital Predistortion of Power Amplifiers for Wireless Applications", A Thesis Presented to the Academic Faculty, School of Electrical and Computer Engineering, Georgia Institute of Technology (2004), ("Ding")
1029	Excerpts from Ronald Crochiere, Multirate Digital Signal Processing (Prentice Hall 1983), ("Crochiere")
1030	Excerpts from Leon Couch, Digital and Analog Communication Systems (Macmillan Publishing 1987), ("Couch")
1031	Excerpts from John Proakis, Communication Systems Engineering (Prentice Hall 2002), ("Proakis")

LISTING OF CHALLENGED CLAIMS

Reference	Claim Limitation
Claim 1	
1[pre]	A transmitter comprising:
1[a]	a power amplifier configured to amplify modulated concurrent multi-band signals to provide amplified concurrent multi-band signals;
1[b]	a concurrent digital multi-band predistortion block configured to effect predistortion of the modulated concurrent multi-band signals to compensate for a non-linearity of the power amplifier; and
1[c]	a signal observation feedback loop configured to effect concurrent sampling of the amplified concurrent multi-band signals at a subsampling frequency lower than twice a highest signal frequency in the amplified concurrent multi-band signals.
Claim 2	
2[pre]	The transmitter of claim 1, wherein said concurrent digital multi-band predistortion block further comprises:
2[a]	a plurality of digital baseband signal predistorter blocks, each baseband signal predistorter block having a plurality of first inputs and a single output, the plurality of first inputs corresponding in number to the multiple bands of the multi-band transmitter and each first input corresponding to a single frequency channel.
Claim 3	
3[pre]	The transmitter of claim 2, wherein said concurrent digital multi-band predistortion block further comprises
3[a]	a plurality of digital baseband signal predistorter blocks, each baseband signal predistorter block having a plurality of first inputs and a single output, the plurality of first inputs corresponding in number to the multiple bands of the multi-band transmitter and each first input corresponding to a single frequency channel and wherein
3[b]	the signal observation feedback loop includes an analyzing and modeling stage directly connected to each of the plurality of outputs of said digital multi-band predistortion block for receiving the respective predistorted signals and for using said received predistorted signals in controlling said digital multi-band predistortion block.
Claim 4	

4[pre]	The transmitter of claim 3, wherein said analyzing and modeling stage further comprises:
4[a]	a plurality of outputs connected to and for updating the parameters of said digital baseband signal predistorter block;
4[b]	a plurality of inputs connected to said outputs of said signal observation feedback loop.
Claim 5	
5[pre]	The transmitter of claim 3, wherein said analyzing and modeling stage is further configured to:
5[a]	perform time alignment of complex baseband signals from sampling said outputs of said power amplifier; and
5[b]	perform the reconstruction of the complex baseband signals from sampling said outputs of said power amplifier.
Claim 6	
6[pre]	The transmitter of claim 2, wherein said signal observation feedback loop further is further configured to:
6[a]	down-convert samples of the RF signals at said output of the power amplifier; and
6[b]	extract from said down-converted samples a baseband equivalent for all frequency channels.
Claim 7	
7[pre]	The transmitter of claim 2, wherein said signal observation feedback loop further comprises for each channel
7[a]	an RF filter; a signal down conversion block; and an analog-to-digital converter (ADC).
Claim 8	
8[pre]	The transmitter of claim 2, wherein said signal observation feedback loop further comprises
8[a]	a single subsampling-based receiver to down-convert samples output from a concurrent multi-band transmitter.
Claim 9	
9[pre]	The transmitter of claim 8, wherein said single subsampling-based receiver further comprises:
9[a]	an RF filter; a track and hold (T&H) block; and an analog-to-digital converter (ADC).
Claim 10	

10	The transmitter of claim 1, wherein the subsampling frequency is greater than two times a signal bandwidth of the modulated concurrent multi-band signals.
Claim 11	
11	The transmitter of clam **1**, wherein the subsampling frequency f_s is in a range $2fu/n \leqq f_s \leqq 2h/(n-1)$where $1 \leqq n \leqq \lvert fu/B \rvert$, and where B is a bandwidth of the amplified concurrent multi-band signals, and f_L f_u, are respective lower and upper frequencies of the bandwidth, and n is an integer.
Claim 12	
12[pre]	A method at transmitter comprising:
12[a]	amplifying a modulated concurrent multi-hand signal to provide an amplified concurrent multi-band sinal;
12[b]	predistorting the modulated concurrent multi-hand signal to compensate for a non-linearity of the power amplifier:
12[c]	subsampling of the amplified concurrent multi-band signals at a subsampling frequency lower than twice a highest signal frequency in the amplified multi-band signal; and
12[d]	controlling the predistorting by the subsampled concurrent multi-band signal.
Claim 13	
13	13. The method of claim 12, wherein the subsampling frequency is greater than two times a signal bandwidth of the modulated concurrent multi-band signal.
Claim 14	
14	The method of claim 12, wherein the subsampling frequency is chosen to avoiding aliasing between replicas.
Claim 15	
15	The method of claim 14, wherein the chosen subsampling frequency fs for a given signal bandwidth and carrier frequency fc is in the range $2f_u/n \leq f_s \leq 2f_h/(n-1)$where $1 \leqq n \leqq \lvert f_U/B \rvert$and where B is a bandwidth of the amplified concurrent multi band signal, and f_L,f_u are respective lower and upper frequencies of the bandwidth, and n is an integer.

I. INTRODUCTION

Pursuant to 35 U.S.C. §§311 *et seq*. and 37 C.F.R. §§42.1 *et seq*., Nokia of America Corporation, Ericsson Inc., AT&T Mobility LLC, Cellco Partnership d/b/a/ Verizon Wireless, and T-Mobile USA, Inc. (collectively, "Petitioners") hereby petition for an *inter partes* review ("IPR") of Claims 1-15 (the "Challenged Claims") of U.S. Patent No. 9,641,204 (the "'204 patent"; EX-1001). Petitioners respectfully request that the Board institute IPR because this Petition demonstrates that there is a reasonable likelihood that Petitioner will prevail with respect to at least one Challenged Claim.

II. OVERVIEW

The Challenged Claims are unpatentable as obvious. When a power amplifier ("PA"), like those used in radio telecommunications, operates in its non-linear region, the output from the PA is distorted relative to its input. EX-1003, ¶¶31-37. Like many others prior to the '204 Patent, the inventors proposed to mitigate PA nonlinearities by predistorting the signal input into the PA. EX-1003, ¶31. As shown in the '204 Patent's Fig. 2, the specification discloses a well-known "indirect learning" approach to predistortion where feedback signals are taken after predistortion and after the PA (blue) so that the nonlinearities introduced by the PA (green) can be modeled (orange) and used to update the system's predistorters (purple):

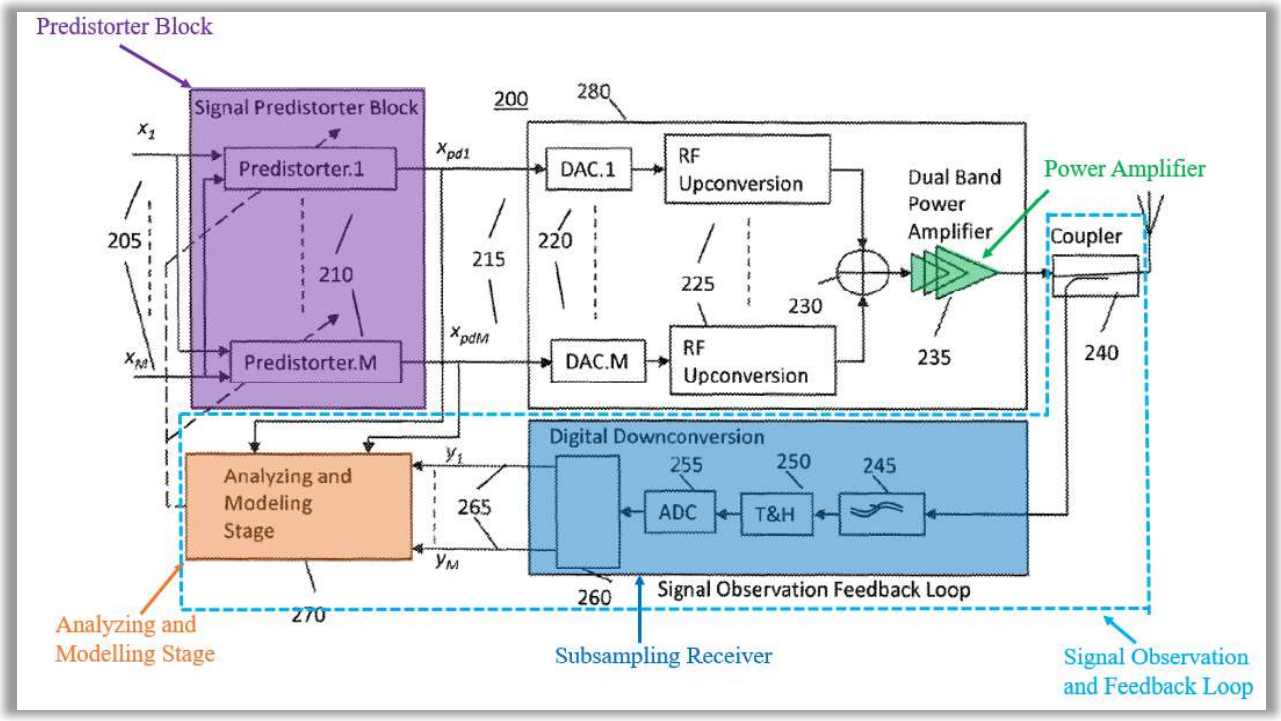

EX-1001, Fig. 2 (Annotated); EX-1003, ¶32.

The signal predistorter block predistorts input signals ($x_1$to x_M) based on an estimate from the "analyzing and modeling stage" through comparison of the predistorted signals ($x_{pd1}$to x_{pdM}) to post-PA feedback signals (y_1 to y_M). The post-PA feedback signals are taken using known subsampling techniques. The Patent Owner argued during prosecution that this basic architecture with a subsampling receiver was novel and non-obvious, but this is simply incorrect. EX-1003, ¶33.

Rather, it was commonplace to compensate for distortion by using feedback signals taken both after predistortion and after the PA to model the PA's nonlinearity. EX-1003, ¶34. For example, Peroulas (used in Ground 1) discloses a

near identical architecture for predistortion (shown with common elements annotated in a common color):

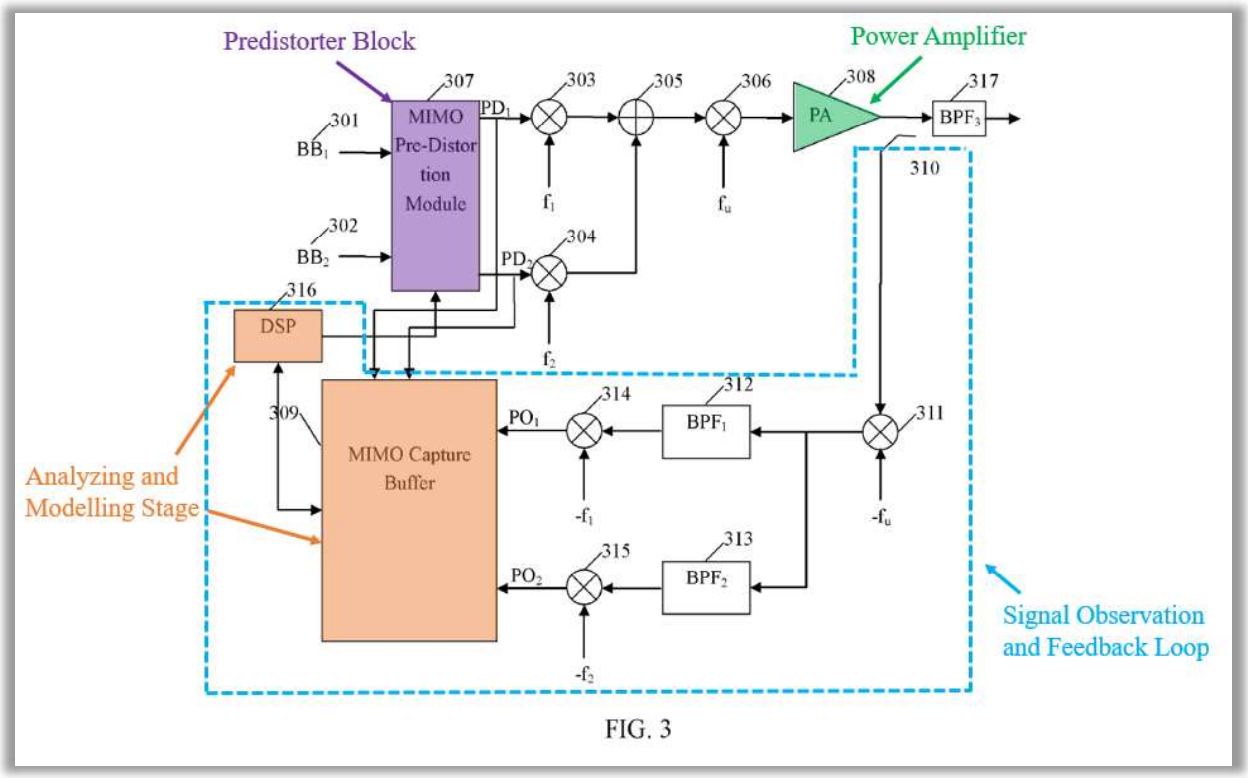

FIG. 3

EX-1005, Fig. 3 (Annotated).

Peroulas' MIMO Pre-Distortion Module (purple) predistorts input signals (BB_1 and BB_2) based on an estimate from the MIMO Capture Buffer and Digital Signal Processor ("DSP", orange) through comparison of the predistorted signals to post-PA feedback signals. The feedback signals (PO_1 and PO_2) are taken from the output of the PA and sampled by a signal observation and feedback loop (light blue), just like the '204 Patent. EX-1003, ¶35.

While Peroulas may not expressly state that it uses subsampling for its post-PA feedback, this was a well-known and commonly used technique to provide feedback signals. Thus, a person of ordinary skill in the art ("POSA") understood that Peroulas discloses subsampling for its post-PA feedback. Alternately, it would have been obvious to modify Peroulas' teachings to include subsampling as taught by Cidronali. Cidronali "adopts a subsampling receiver, which allow[s] extreme flexibility and coherent dual-band down-conversation" in digital predistortion systems. EX-1006, 000001. Thus, as described in Ground 1, Peroulas alone or in combination with Cidronali renders obvious each Challenged Claim. EX-1003, ¶36.

Ground 2 then presents an additional basis of unpatentability in view of Posti. Posti discloses a multi-frequency carrier transmitter comprising a plurality of input signals, a plurality of digital modulators for predistortion (purple), and a PA (green) to amplify the signal. EX-1009, 2:43-60, 5:1-5, 5:13-15, 5:41-42. Posti uses indirect learning with a signal observation and feedback loop (blue) to estimate and linearize the distortion introduced by the PA using an adaptive predistorter 108 (orange) as the claimed "analyzing and modeling stage." EX-1009, 5:50-52, 6:23-33; EX-1003, ¶37.

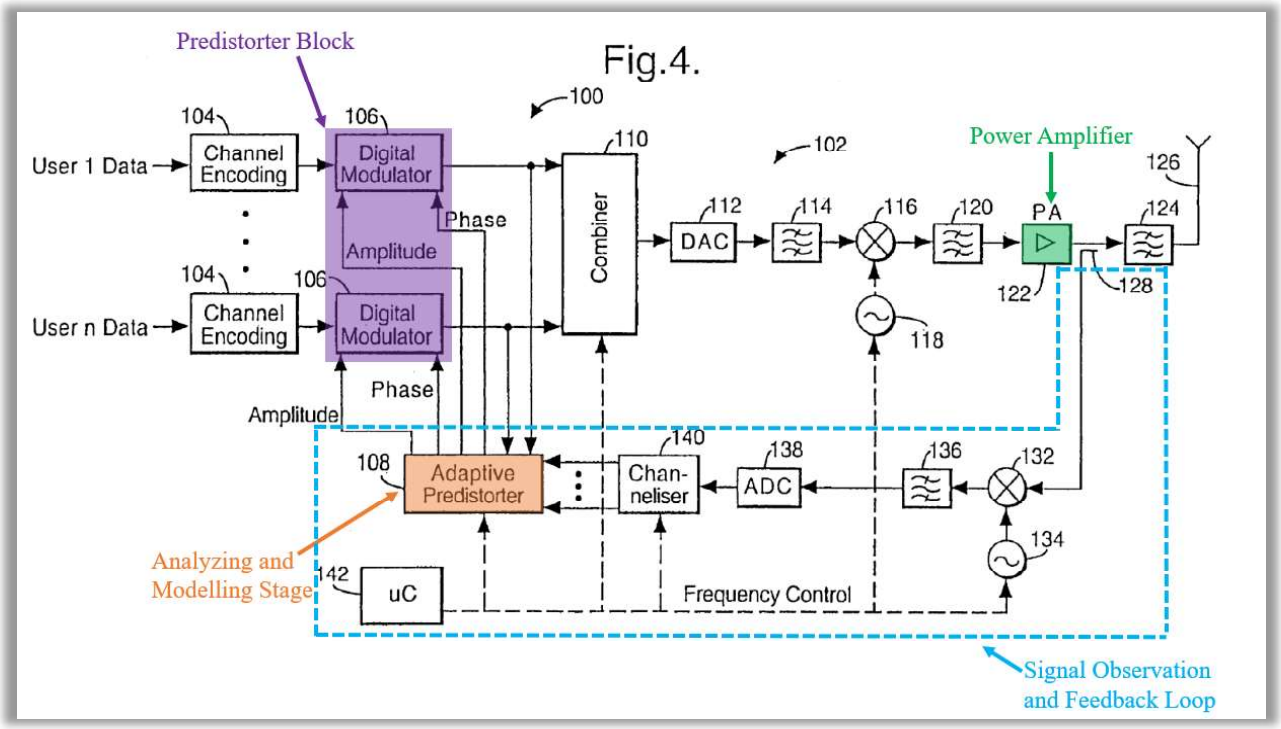

EX-1009, Fig 4 (Annotated). As in Ground 1, Posti alone or in combination with Cidronali renders obvious each Challenged Claim.

III. GROUNDS FOR STANDING UNDER 37 C.F.R. § 42.104(a)

Petitioners certify that the ’204 Patent is available for IPR and Petitioners are not barred or estopped from requesting this review. 37 C.F.R. §42.104(a). This Petition is filed less than one year after the date on which Petitioners (or a privy of Petitioners) were served with a complaint alleging infringement of the ’204 Patent. This Petition is filed under 37 C.F.R. §42.106(a).

IV. RELIEF REQUESTED (37 C.F.R. §42.22(a))

Petitioners respectfully request institution pursuant to 37 C.F.R. §42.108 and cancellation of the Challenged Claims.

V. REASONS FOR THE RELIEF REQUESTED

As explained herein and in the Declaration of James Proctor (EX-1003), the '204 Patent's predistortion system is obvious over the prior art.

A. State of the Art

The following describes the state of the art as of the '204 Patent's effective filing date, and provides additional factual support for the general knowledge, common understanding, and skill of a POSA at that time. EX-1003, ¶¶38-63.

1. Digital Predistortion ("DPD")

To mitigate unwanted distortions caused by amplification, radios will predistort (or "linearize") their input signals before they are sent to the PA. The predistortion begins by "modeling" the PA's distortion effects. Using knowledge of the kind of distortion a given PA will introduce, a radio can predistort input signals such that the PA's later distortion is largely canceled. EX-1003, ¶¶38-46. Predistortion is also sometimes called "linearization." *Id.*, ¶43. This figure illustrates a predistorter's operation in a simplified way:

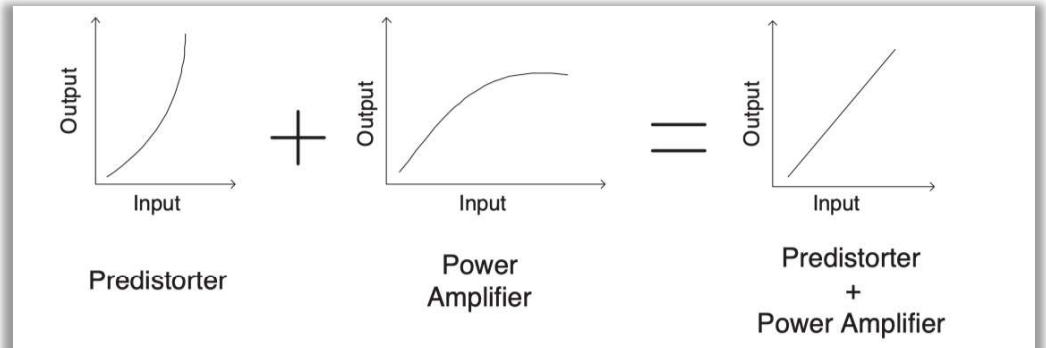

Figure 5.5: Simplified operation of predistortion.

EX-1010, Fig. 5.5; EX-1003, ¶44.

In a dual or multi-band system, predistortion can mitigate spectral distortion components and intermodulation products ("IMPs") between the fundamental signals. IMPs arise due to the mixing of signals separated in the frequency domain, and they can appear so close in frequency to the input signals that they cannot be filtered out. EX-1011, pp. 96, 139, 155. The graphs below show that RF signals without predistortion (blue) have an increased power outside the input signal's bandwidth (which is undesirable) as compared to the RF signal with predistortion (red). EX-1003, ¶45.

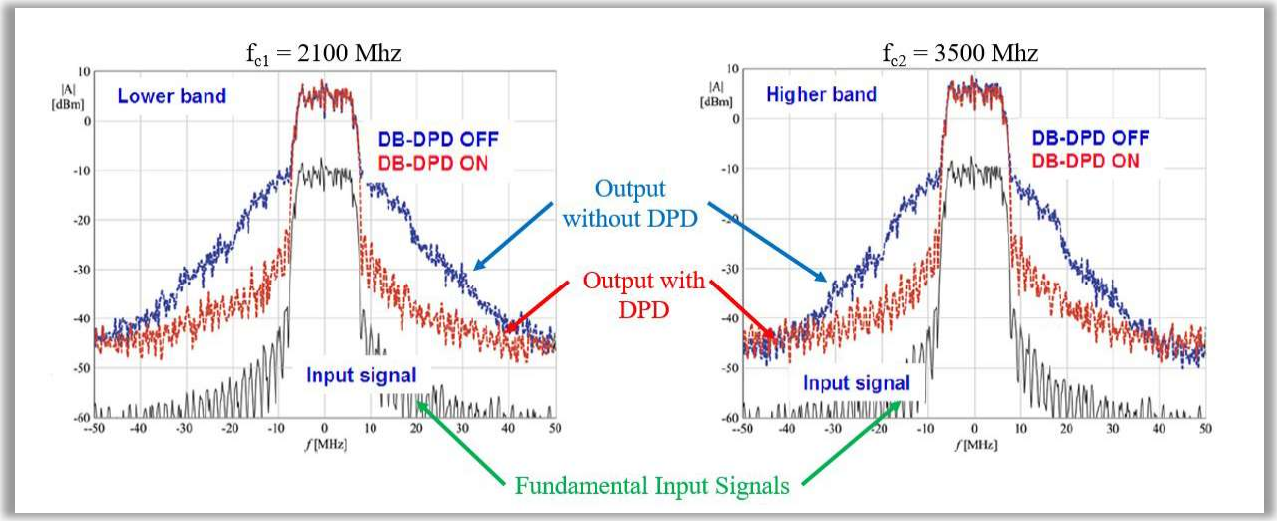

EX-1011, Fig. 30 (Annotated).

To limit the distortion caused by amplification, a POSA was aware of the many prior architectures and techniques for applying predistortion. For example, Choi (EX-1021) developed a system using one predistorter per band in a multi-band

system such that "[e]ach PD [predistorter] removes the nonlinear cross-products and self-products to mitigate the spectral regrowth for the corresponding band." EX-1021, 133. Choi also explains that "[s]ince the cross-products between band 1 and band 2 signals appear in both ω_1 and ω_2, the predistorter also requires $x_1(n)$ and $x_2(n)$ [band 1 and band 2 input signals] for predistortion." *Id.*, 134; EX-1003, ¶46.

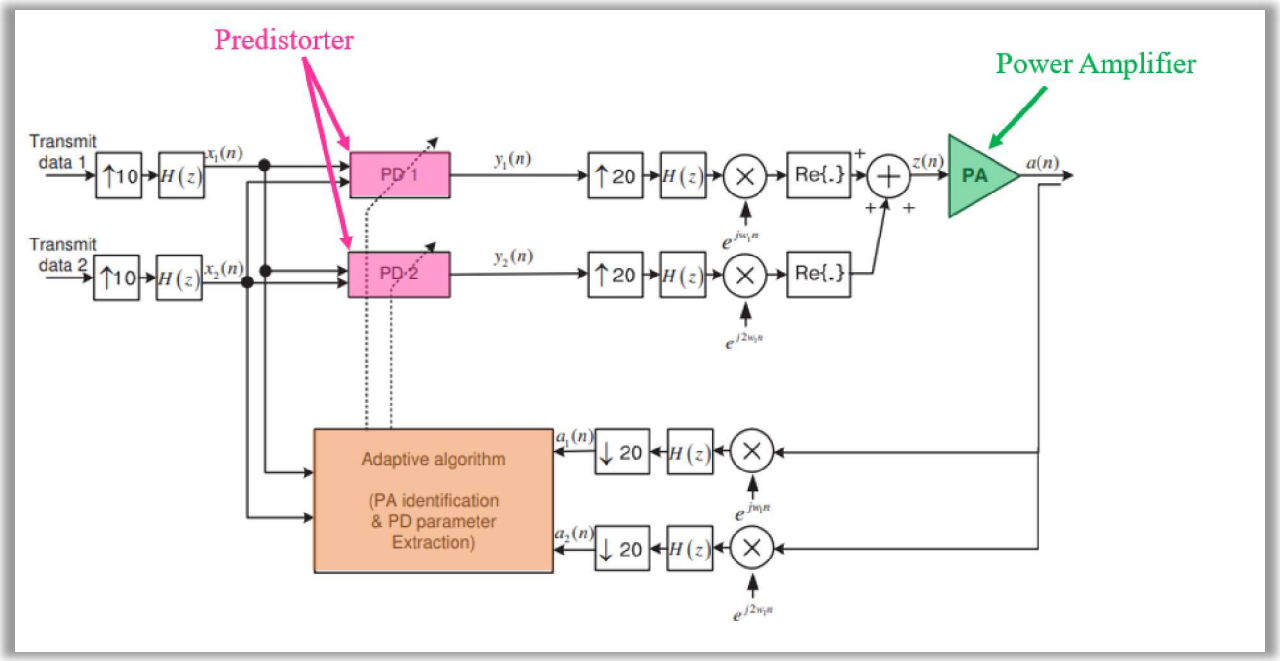

EX-1021, Fig. 4 (Annotated).

2. Direct and Indirect Predistortion

Adaptation or learning architectures for DPD were generally categorized as one of two primary types: direct and indirect. EX-1012, p 1; EX-1003, ¶¶47-49.

To model the PA's nonlinearities, a direct learning architecture uses feedback from the output of the PA and the *input* to the predistorter. In contrast, indirect

learning uses the output of the PA and the *output* from the predistorter (prior to amplification). EX-1014, p 234; EX-1003, ¶48.

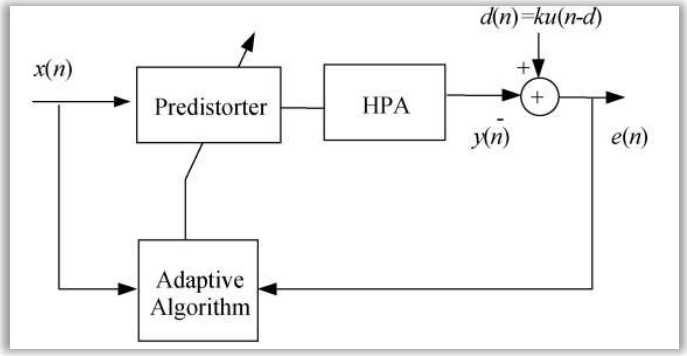

Direct DPD. EX-1013, Fig 2(b).

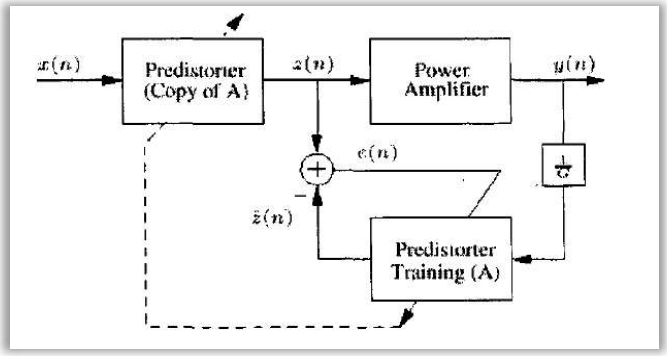

Indirect DPD. EX-1014, Fig. 2.

Direct and indirect learning were widely discussed and formed the two main feedback mechanisms a POSA would have considered when implementing DPD. *See e.g.*, EX-1005 (indirect); EX-1006 (direct); EX-1011, p. 97 (indirect), EX-1013, Fig. 2 (indirect and direct); EX-1012, Figs. 2-3 (indirect and direct, respectively); EX-1003, ¶49.

3. Nyquist-Rate Sampling and Subsampling

Analog to digital conversion is the process of sampling an analog waveform and then transforming the analog information into a digital representation. EX-1016, 59. To represent an analog signal digitally, this process is repeated at a "sampling rate." "The classical sampling theorem states that a signal occupying a finite range (band-limited) in the frequency domain can be represented by its samples taken at a finite rate." EX-1025, 4. Additionally, a band-limited signal can be completely

reconstructed if sampled at a rate, f_s, defined as $f_s \geq 2 * f_{max}$, where f_{max} is the highest signal frequency. EX-1016, 59; EX-1003, ¶¶50-51.

In other words, sampling should be done at or higher than twice the highest signal frequency (generally referred to as the Nyquist rate). Sampling at this rate "guarantees no overlaps in the sampled spectrum, and thus allows recovery of the original signal by a low-pass filtering operation." EX-1024, 2173(Introduction). But at the same time, "[f]or efficient sampling, it is desirable to attain the lowest sampling rate possible …." EX-1025, 4. This is where subsampling, or sampling below the Nyquist rate, comes in. *Id.*, 5; EX-1003, ¶52.

Subsampling allows for the entire signal to be reconstructed even though the signal was sampled below the Nyquist sampling rate. EX-1016, 188-189; EX-1003, ¶53.

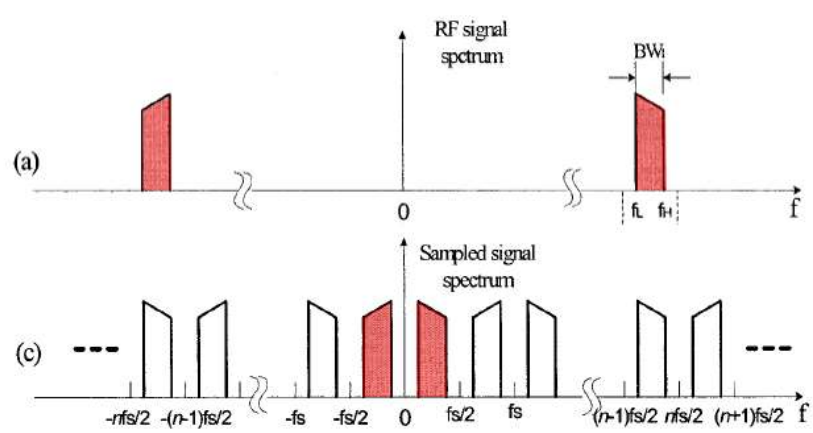

Figure 3.27. Spectra of band-pass sampling: (a) RF signal spectrum, (b) sampling pulse spectrum, and (c) sampled signal spectrum

EX-1016, Figure 3.27 (Annotated) (Partial). Subsampling, however, was known to create mirror replicas (aliases) of the signal at various frequencies between 0 and f_h, which are dealt with through proper sampling rate, f_s, selection. EX-1003, ¶53.

The widely known equations to determine an acceptable alias-free sample rate are defined below:

$$\frac{2f_H}{n} \leq f_s \leq \frac{2f_L}{n-1} \tag{1}$$

$$n_{max} = \left\lfloor \frac{f_H}{f_H - f_L} \right\rfloor \tag{2}$$

EX-1016, Equations (3.4.3) and (3.4.4); *see also* EX-1001, 4:48-50; EX-1016, 189; EX-1024, 2173 (Introduction); EX-1025, 1-3. By lowering the required sampling rate, subsampling also reduces the required processing rate, and expensive high-rate components can be replaced with cheaper, low-rate components. Subsampling also reduces the number of down-conversion units and filters. EX-1016, 189; EX-1003, ¶54.

Receivers for subsampling were also well-known. As early as 2002, Park disclosed a subsampling receiver within an indirect learning architecture to filter,

down-convert, and sample the feedback signal:[1]

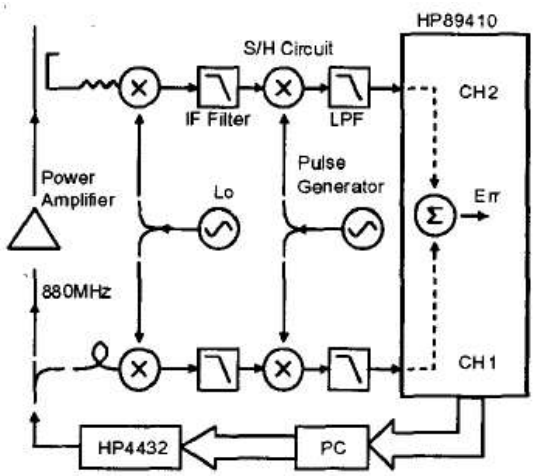

Figure 5: Subsampling Downconverter Test Bed Block Diagram.

EX-1014, Fig. 5. Further, Mostafa describes a subsampling receiver that includes filters, a track and hold block, and a single ADC to provide high performance at a reduced manufacturing cost and power. EX-1019, 3:65-67; *see also* EX-1020 (inventors' own discussion of subsampling receivers at least 3 years prior to the '204 Patent). EX-1003, ¶55.

B. Summary of the '204 Patent

The '204 Patent explains that PAs display nonlinear behavior that "introduce unwanted intermodulation distortions into the system." EX-1001, 1:32-37. In dual-band systems, the PA's nonlinear behavior will further introduce intermodulation,

[1] For both direct and indirect learning, the feedback path from the PA acts as a receiver and, consistent with any receiver, the feedback path requires filtering, down-conversion, and sampling. EX-1003, ¶55.

cross-modulation, and harmonic products (blue) caused by interactions between the two fundamental signals (green). *Id.,* 1:46-50; EX-1003, ¶64.

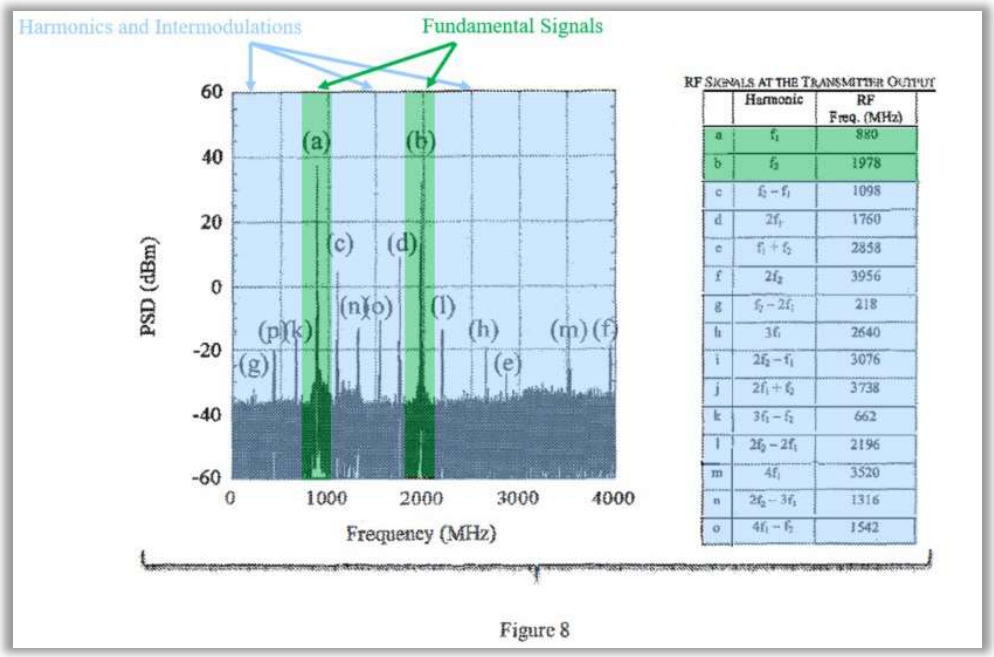

EX-1001, Figure 8 (Annotated).

The ’204 Patent purports to provide a solution for this by using a “multiple branch digital predistortion linearization architecture and digital signal processing algorithms for [a] linearized multi-band transmitter.” EX-1001, 3:43-45. Fig. 1 illustrates a linearization architecture including a signal predistorter block (purple), dual-band PA, feedback signals (blue and red), and analyzing and modeling stage (orange). EX-1003, ¶65.

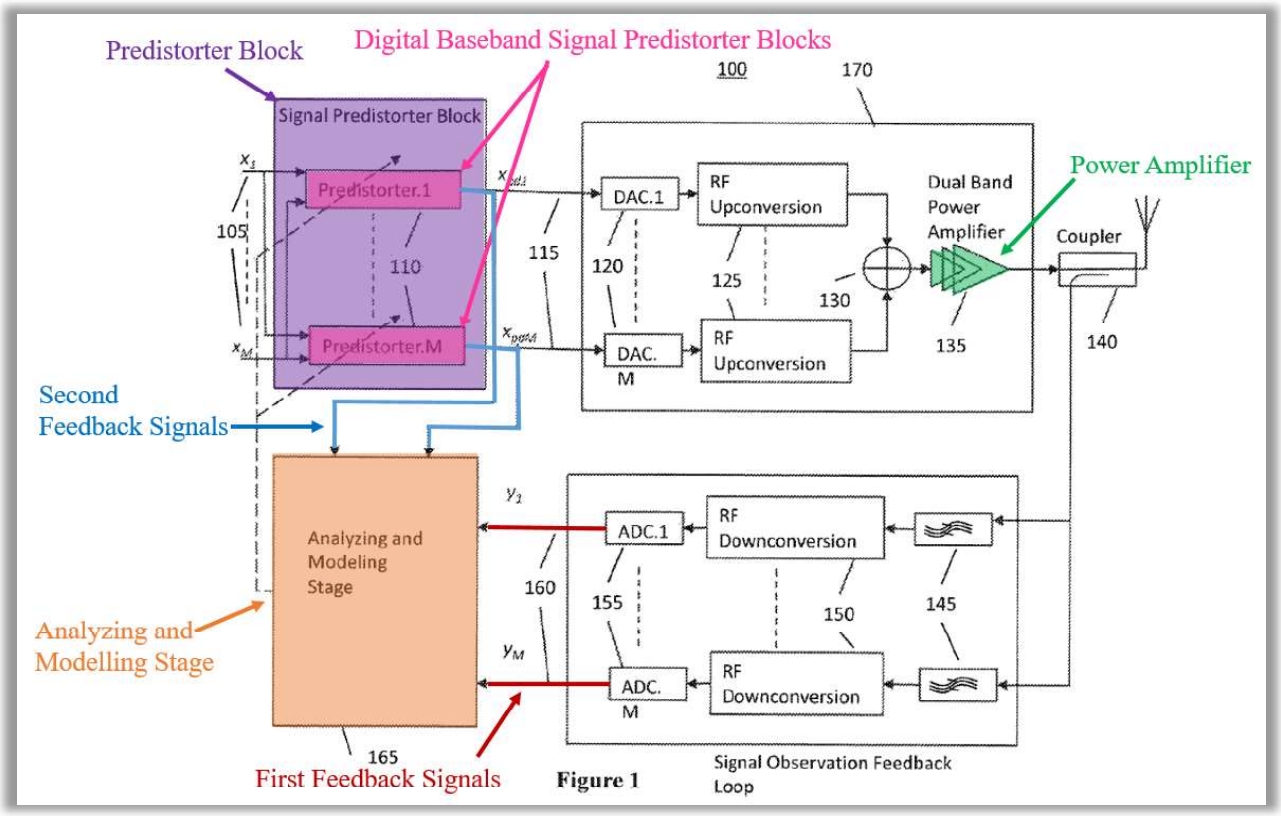

Figure 1

EX-1001, Figure 1 (Annotated).

The system receives input signals (x_1 to x_m) which are fed into M predistorters 110 (pink) to generate output signals (x_{pd1} to x_{pdM}). The output signals are converted to analog and ultimately amplified and transmitted. A coupler 140 takes a feedback signal from the PA 135, and then the system filters, frequency down converts, digitizes, and passes signals (y_1 to y_M) to the analyzing and modeling stage (orange). The analyzing and modeling stage also receives second feedback signals (x_{pd1} and x_{pdM}, blue). EX-1001, 3:46-60; EX-1003, ¶66.

The specification includes the following equations for compensation of the nonlinearities created by the PA:

$$x_{pd1}(n) = \sum_{m=0}^{M-1} \sum_{k=0}^{K-1} \sum_{j=0}^{k} c_{1,j,k,m} x_1(n-m) |x_1(n-m)|^{k-j} |x_2(n-m)|^{j}$$

$$x_{pd2}(n) = \sum_{m=0}^{M-1} \sum_{k=0}^{K-1} \sum_{j=0}^{k} c_{2,j,k,m} x_2(n-m) |x_2(n-m)|^{k-j} |x_1(n-m)|^{j}$$

EX-1001, 4:5-10; EX-1003, ¶67.

In another embodiment, a "subsampling based receiver 300" is used. EX-1001, 4:51-52. Receiver 300 (blue) consists of a singular "RF bandpass filter 305, low-noise amplifier (LNA) 310, subsampling receiver 345 including the track and hold (T&H) 320, and ADC 325 followed by baseband digital signal processing (DSP) unit 330." *Id.*, 4:51-56; EX-1003, ¶68.

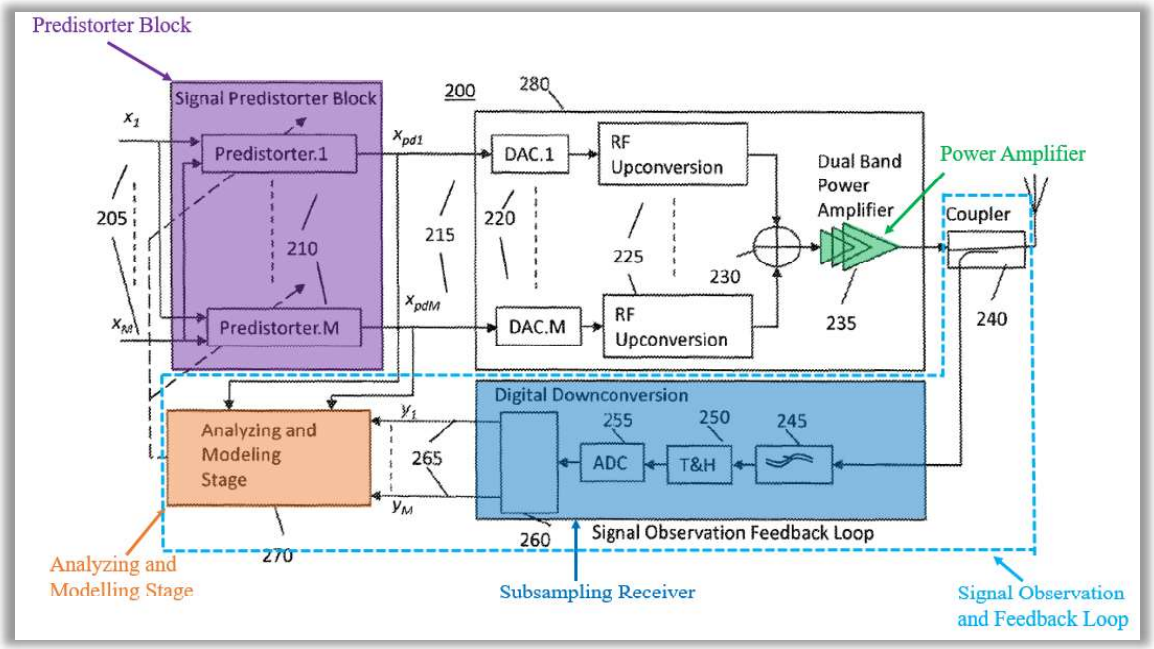

EX-1001, Figure 2 (Annotated).

Consistent with the State of the Art, the '204 Patent states that the subsampling rate should be chosen according to the known equations to prevent aliasing:

$$\frac{2f_U}{n} \leq f_s \leq \frac{2f_L}{n-1} \; where \; 1 \leq n \leq \left\lfloor \frac{f_U}{B} \right\rfloor \qquad (2)$$

EX-1001, 4:33-50; EX-1003, ¶69.

C. Summary of the Prosecution History

During examination, the Office issued a final rejection to the Challenged Claims as anticipated by either Suzuki (US 2005/0168283) or Fuller (US 8,391,809), or as obvious over Suzuki in view of Fuller. EX-1002, 136-146. The Applicant added 6 claims and amended Claim 1 as follows:

> 1. (Currently amended) A transmitter comprising:
>
> a power amplifier configured to amplify a modulated concurrent multi-band ~~signal~~ <u>signals</u> to provide ~~an~~ amplified concurrent multi-band signal<u>s</u>;
>
> a concurrent digital multi-band predistortion block configured to effect predistortion of the modulated concurrent multi-band ~~signal~~ signals to compensate for a nonlinearity of the power amplifier; and
>
> a signal observation feedback loop configured to effect concurrent sampling of the amplified concurrent multi-band <u>signals at a subsampling frequency lower than twice a highest signal frequency in the amplified concurrent multi-band signals</u>.

EX-1002, 163.

In reference to the above amendment, Applicant stated that it "is well known in the art of signal communication that subsampling is the process of sampling at a frequency less than the Nyquist rate." EX-1002, 167. Despite this admission that the added feature was "well known," the claims were then allowed. EX-1002, 189.

D. Claim Construction

Petitioners propose that each claim term be given its plain and ordinary meaning in this proceeding, and that no specific construction of any claim term is required because the prior art meets each of the claim terms under any reasonable construction. EX-1003, ¶¶70-76.

To aid the Board's review, however, Petitioners provide additional context surrounding the use of the terms "band" and "channel," which appear in the claims, but are not defined in the specification. For example, dependent claim 2 explains that the "concurrent digital multi-*band* predistortion block further comprises" "a plurality of the digital baseband signal predistorter blocks … and each first input corresponding to a single frequency *channel*." EX-1003, ¶71.

A POSA would have understood "band" and "channel" to correspond to related concepts, with a "band" generally corresponding to a continuous range of frequencies between specified upper and lower limits, and that a "channel" is a particular path (and corresponding signal frequency range) over which signals can be sent. EX-1023 (IEEE Standard 100, 200). Thus, a given "band" may comprise

one or more "channels," and if a system is "multi-band," it is comprised of multiple bands with each band containing one or more channels. EX-1003, ¶72. Likewise, multi-channel systems are comprised of one or more channels within one or more bands. A POSA would have also understood that wireless standards (*i.e.*, 3G, 4G, and 5G) define the technical requirements around "bands" and the one or more "channels" that make up a particular band. EX-1003, ¶¶72-73.

While none of this is explained in the specification, the '204 Patent purports to "relate[] to multi-band digital predistortion linearization" (EX-1001, 1:25-26) and, in the patent's single usage of the word "channel," the '204 Patent explains that "out-of-band intermodulation terms" are "usually filtered out before transmission using RF filter to avoid signal quality degradation and interference with signals at the adjacent *channels*" (*id.,* 5:2-8 (emphasis added).) Thus, the specification appears to suggest that in the aforementioned context, a "channel" is the frequency range corresponding to a signal to be transmitted within a particular band. EX-1003, ¶74.

Similarly, and in the context of the "processing model equations of the linearization processing algorithm 165," "$x_1(n)$ and $x_2(n)$ are the input signals [and] $x_{pd1}(n)$ and $x_{pd2}(n)$ are the predistorted signals to the input of the dual-band transmitter." EX-1001, 4:13-18. In other words, and in the context of a "dual-band" transmitter that transmits over two "bands" or frequencies, the paths of the input signals to the predistorter(s), with corresponding frequency ranges, are simply the

claimed "channels," and there will be one channel or signal path corresponding to each "band" of the transmitter. Thus, each input signal path to a predistorter has a particular frequency range and represents a "channel." EX-1003, ¶75. This is also what is depicted in the patent's architectural layouts, Figs. 1 and 2.

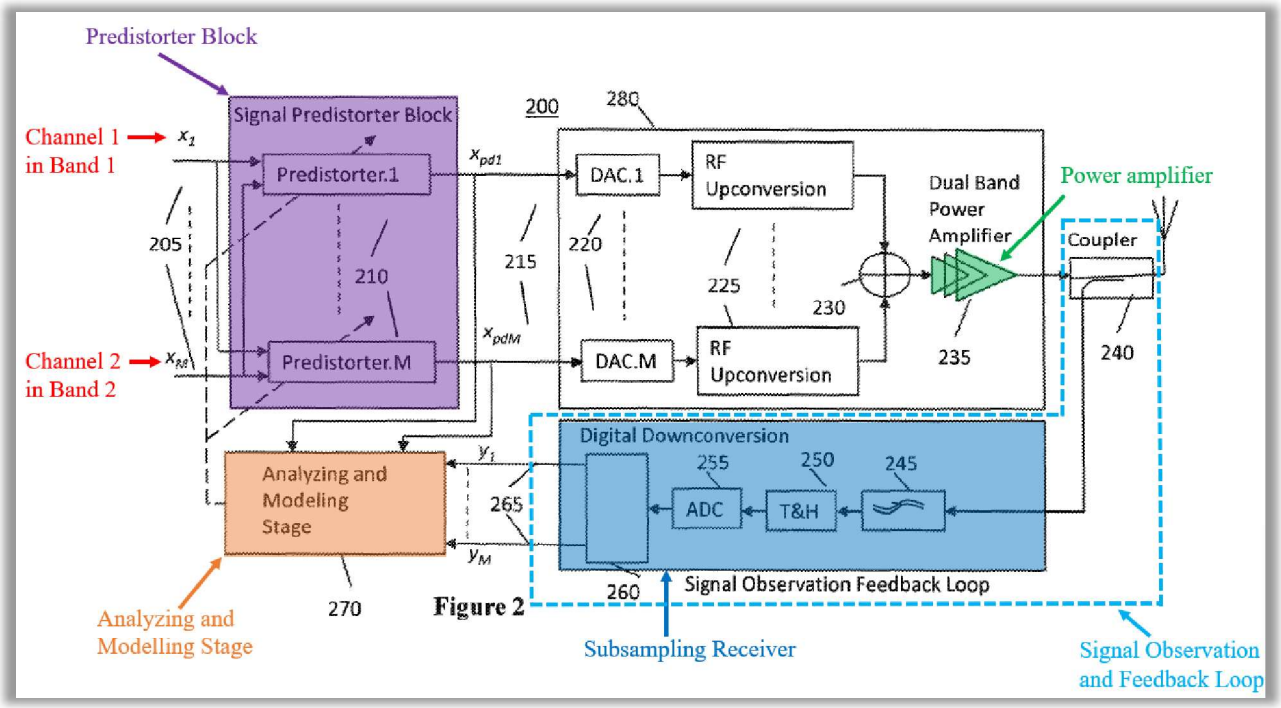

See, e.g., EX-1001, Fig. 2 (Annotated).

The prior art relied on herein discloses any reasonable interpretation of "band" and "channel" because both Peroulas and Posti disclose transmitters/PAs that are linearized using predistorters that take, as part of their input, a signal, with a corresponding frequency range (or "channel"), corresponding to each "band" of the transmitter, exactly as described by the '204 Patent. EX-1003, ¶76.

E. Priority Date

The ’204 Patent was filed on August 25, 2014, and claims priority to U.S. Application No. 13/274,290, filed on October 14, 2011.

F. Person of Ordinary Skill in the Art

For purposes of this IPR, Petitioners assert that a POSA would have been someone with at least (1) a bachelor’s degree in electrical engineering or a related field, and (2) either (a) a master’s degree in electrical engineering or a related filed, or (b) two or more years of work or research experience in wireless communications and, in particular, power amplification of radio signals. EX-1003, ¶¶77-80.

VI. IDENTIFICATION OF CHALLENGES

A. Challenged Claims

This Petition challenges Claims 1-15.

B. Statutory Grounds for Challenges

Petitioners’ challenges are summarized as follows:

Ground	Claims	Basis (pre-AIA)	References
1	1-15	35 U.S.C. § 103	Peroulas Alone or in View of Cidronali
2	1-15	35 U.S.C. § 103	Posti Alone or in View of Cidronali

Peroulas published on October 4, 2012 (EX-1005), and claims the benefit of a March 28, 2011, International filing date, and is prior art at least under 35 U.S.C.

§ 102(a)/(e). Cidronali published on January 9, 2009 (EX-1006)[2] and Posti issued on February 14, 2006 (EX-1009). Both are prior art under at least pre-AIA 35 U.S.C. §102(a)/(b). None of these references were previously before the Office.

VII. IDENTIFICATION OF HOW THE CLAIMS ARE UNPATENTABLE

A. Ground 1: Claims 1-15 are Obvious over Peroulas Alone or in View of Cidronali

1. Peroulas

Peroulas relates to "a method for pre-distorting and a pre-distorter." EX-1005, 1:3-4. Peroulas explains that to improve efficiency, PAs should be driven into their non-linear region, resulting in higher amounts of distortion, which can be mitigated through predistortion. EX-1005, 7:25-8:1; EX-1003, ¶82.

Peroulas' solution includes a predistortion module (purple, below) having a plurality of predistortion units, each corresponding to one predistortion function (not shown, but producing PD_1 and PD_2, respectively). EX-1005, 6:25-27; *see also id.* 6:11-20, 7:1-5, 7:26-27. Peroulas uses indirect learning where feedback is taken concurrently from the output of the predistorters and the output of the PA, and fed into a MIMO Capture Buffer 309 and DSP Block 316 (orange) to update the predistortion functions. EX-1005, 8:10-15, 9:1-10; EX-1003, ¶83.

[2] Additional evidence establishing the public accessibility of Cidronali is provided in EX-1007.

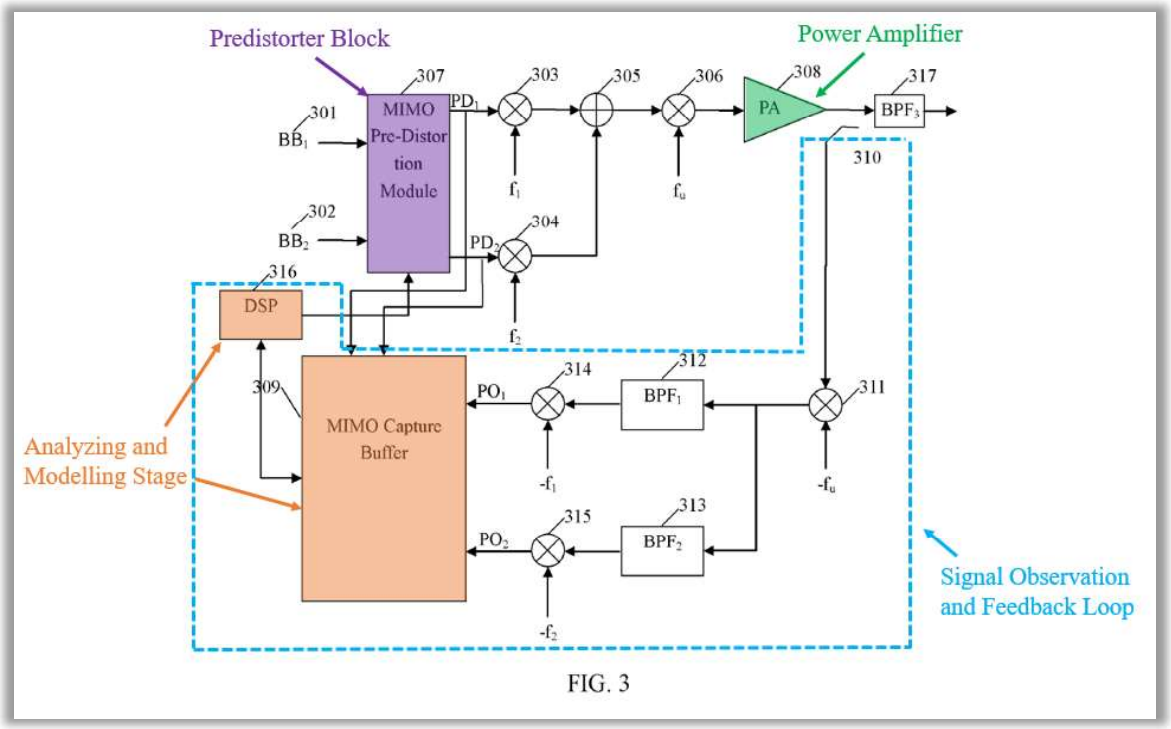

FIG. 3

EX-1005, Fig. 3 (Annotated).

2. Cidronali

Cidronali discloses a dual-band DPD system "capable of a simultaneous predistortion of a concurrent dual-band power amplifier at both frequency bands." EX-1006, 000001. Cidronali uses a digital IF predistortion block (purple) to generate predistorted signals for the PA (green). For its post-PA feedback, Cidronali uses subsampling and a subsampling receiver (blue) in a signal observation and feedback loop (light blue) to send this information to an Adaptation block (orange). EX-1003, ¶84.

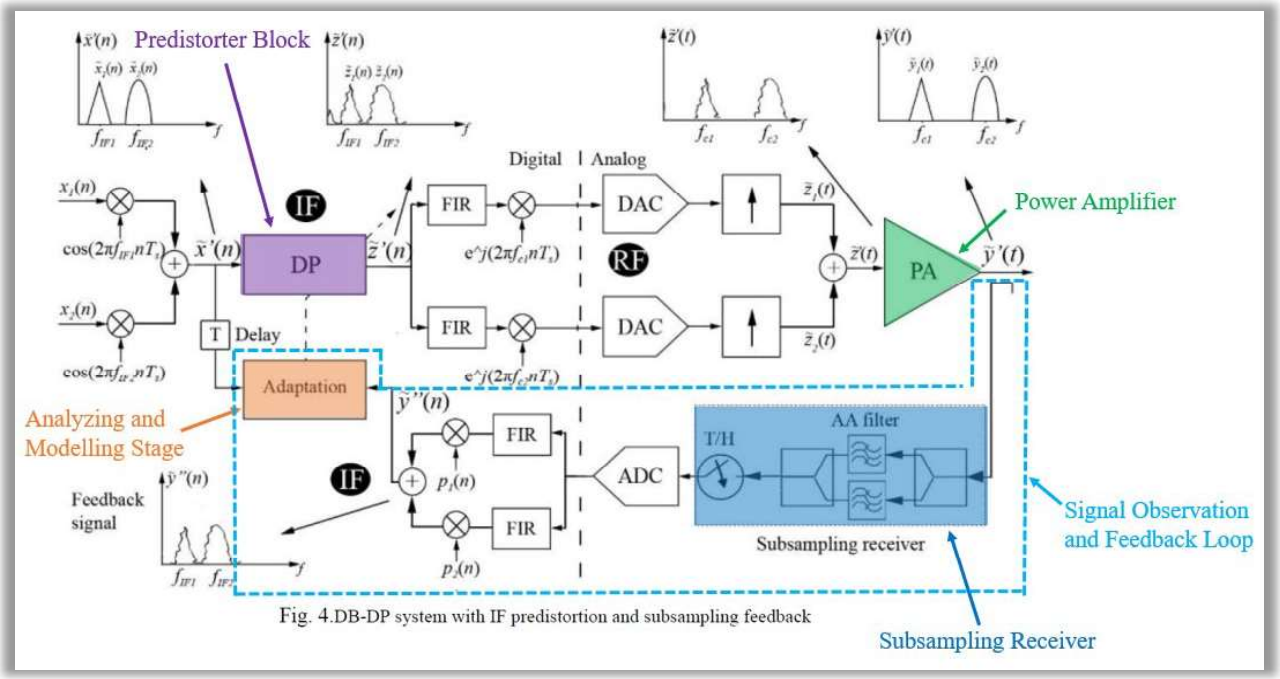

Fig. 4.DB-DP system with IF predistortion and subsampling feedback

EX-1006 Fig. 4 (Annotated). Cidronali's subsampling receiver includes a down-conversion block, filter bank, track and hold block, and ADC sampling according to the widely understood bandpass theorem and subsampling technique. EX-1006, 000002. Cidronali also demonstrated a subsampling frequency, f_s, of 146.5 MHz for two transmission signal frequencies of 2100 MHz and 3500 MHz. EX-1006, 000003. This teaches a subsampling receiver operating according to the subsampling equations (1) and (2) defined in the State of the Art (§V.A.3), and similarly discloses the use of a subsampling frequency lower than twice a highest signal frequency. EX-1003, ¶85.

3. Motivation to Combine the Teachings of Peroulas with the Teachings of Cidronali

Peroulas alone renders obvious the claims of the ’204 Patent. Specifically, Peroulas teaches a signal observation feedback loop configured to effect concurrent sampling (as recited in Claim 1). It was also known, as explained in the State of the Art, that the sampling rate of Peroulas’ feedback loop would either be configured according to the Nyquist rate or subsampled at a rate lower than Nyquist. Indeed, Patent Owner admitted during prosecution that it “is well known in the art of signal communication that subsampling is the process of sampling at a frequency less than the Nyquist rate.” EX-1002, 167. Thus, a POSA understood that Peroulas’ feedback loop would have used a sampling frequency rate *lower than twice a highest signal frequency in the amplified concurrent multi-band signal*. EX-1003, ¶¶86-94.

Alternatively, to the extent Patent Owner argues that a subsampling rate is not expressly stated in Peroulas, a POSA would be motivated to modify the teachings of Peroulas with Cidronali’s subsampling teachings for several reasons. EX-1003, ¶87. *First*, a POSA would have been motivated to modify the teachings of Peroulas to subsample for the benefit of reducing the complexity and cost of predistorter implementation. As explained in the State of the Art (*see, e.g.,* EX-1019, 3:65-67) and as recognized by Peroulas (EX-1005, Abstract (“[t]he present invention reduces the implementation cost of a pre-distorter”)), there exists a need to reduce the

implementation cost of a dual-band transmitter. EX-1005, 6:2-5. Cidronali demonstrates that subsampling reduces the number of ADCs thereby minimizing the need for expensive components and reducing cost. EX-1006, 000002. The '204 Patent recognizes this motivation as well, which is nothing more than a restatement of POSA's knowledge and understanding. EX-1001, 2:6-8 ("[u]sing Subsampling technique simplifies the feedback loop topology, requires fewer number of RF components, and reduces the power consumption."); EX-1003, ¶88.

Second, for multiband signals, uniform sampling according to the Nyquist rate can be an inefficient method requiring more components to capture the signal, which increases the complexity of the system. EX-1016, 189; §V.A.3 (*supra*). Subsampling addresses this. EX-1003, ¶89. In fact, Cidronali explains that subsampling and its exemplary subsampling receiver "can be adapted to down-convert two (or more) band-limited signals," making it an ideal choice for multiband implementations. EX-1006, 000002. Thus, a POSA would have been motivated to minimize and simplify Peroulas' feedback path in a manner that is more efficient with the inclusion of subsampling, "allow[ing] [for] extreme flexibility and coherent dual-band down-conversion." EX-1006, 000001; EX-1003, ¶89; *Skedco, Inc. v. Strategic Operations, Inc.*, 287 F. Supp. 3d 1100, 1138 (D. Or. 2018) (when there is "market pressure to solve a problem, ***and there are a finite number of identified, predictable solutions***, a POSA has motivation to 'pursue the known options within his or her technical

grasp' and if this leads to anticipated success, it is likely not the product of innovation but of ordinary skill and common sense[.]") (quoting *KSR Int'l Co. v. Teleflex Inc.*, 550 U.S. 398, 421 (2007)).

Third, subsampling allows for direct down conversion from the carrier frequency, which similarly results in cost benefits and performance advantages, further motivating a POSA to use subsampling with Peroulas' feedback loop. *See, e.g.,* EX-1006, 000002; EX-1003, ¶90.

Fourth, due to down conversion in the digital domain, the system can be more easily designed to accommodate a wide range of frequency bands, and the architecture is more flexible, again motivating a POSA to use subsampling with Peroulas' feedback loop. EX-1003, ¶91.

Modifying the teachings of Peroulas to include subsampling would have been achieved with a reasonable expectation of success. Peroulas' predistortion technique would fundamentally remain unchanged, the only difference being the mechanics of how the PA's feedback signals are fed into Peroulas' MIMO Capture Buffer. EX-1003, ¶92. This modification would have been simple for a POSA to achieve as it requires only using prior art components according to their established functions. *Id*., ¶92; *KSR*, 550 U.S. at 421.

By way of example, adjusting Peroulas' system to subsample would have been implemented by applying the bandpass theorem and subsampling technique to

Peroulas' ADC. EX-1005, 30:12-18 ("The bold dotted line … can be implemented by an A/D converter."). This would require no modification to Peroulas' architecture besides selecting the ADC sampling rate according to the well-known bandpass theorem and subsampling technique, and selecting the digital frequency conversion of elements 314 and 315 to adjust the "aliased" signal copies back to baseband. EX-1003,¶93.

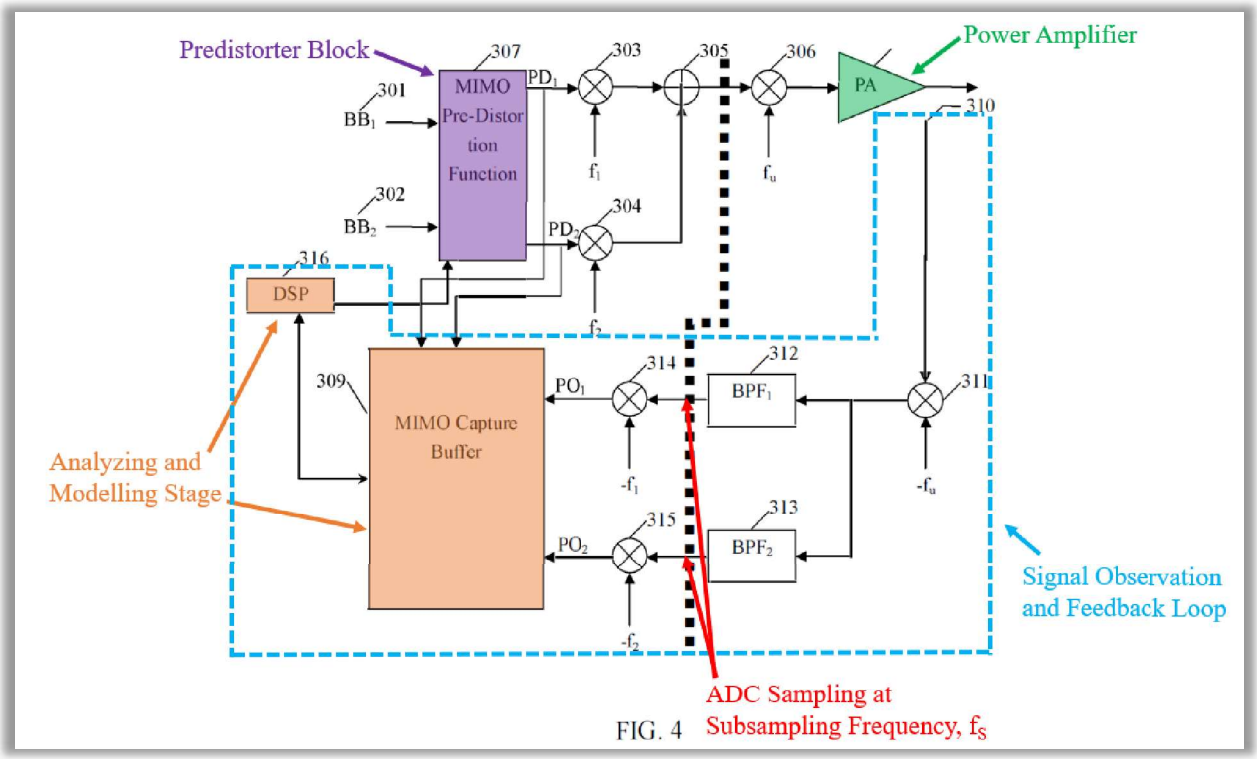

EX-1005, Fig. 4 (Annotated).

Cidronali's further teachings include the bandpass theorem and subsampling technique using a single subsampling-based receiver, which provides even greater cost savings by further reducing the number of components. Thus, a POSA would

have also been motivated to implement Peroulas' teaching of bandpass filters and an ADC with Cidronali's teaching of a single subsampling receiver having filters and an ADC. EX-1003, ¶94.[3] Moreover, the motivating factors to use subsampling with Peroulas, generally, are equally applicable to a POSA's motivation for using a single-subsampling receiver with Peroulas.

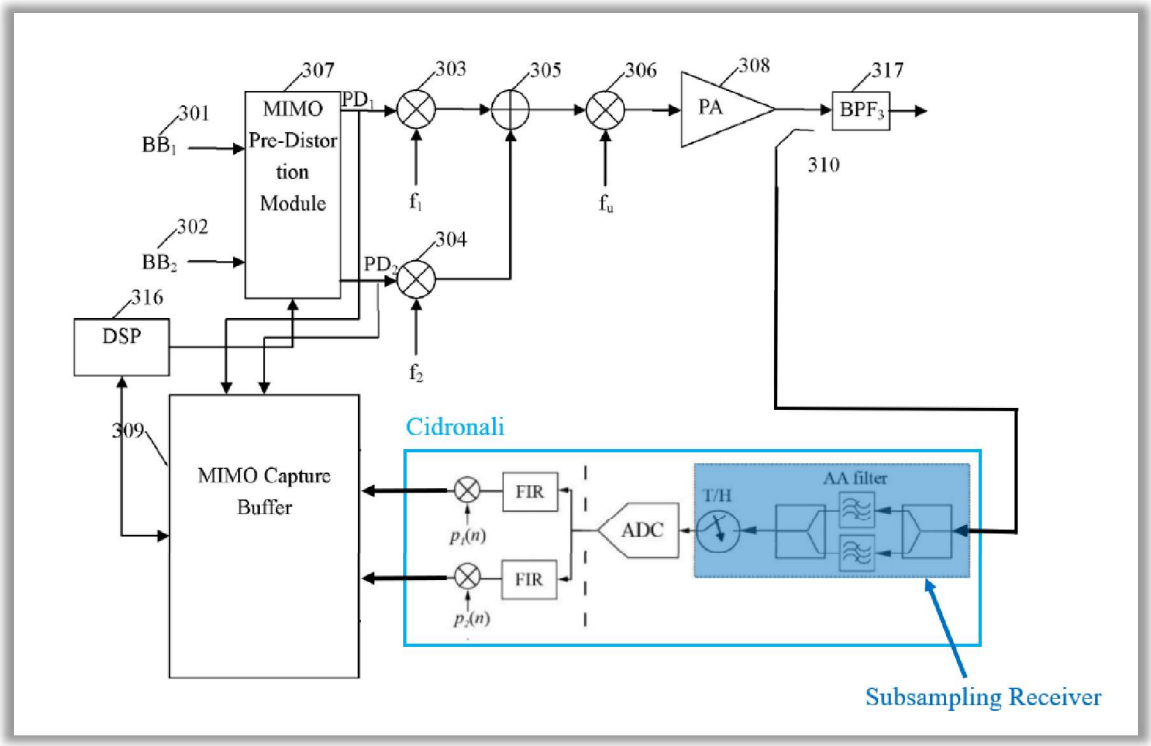

EX-1005, Fig. 3 (Modified in View of EX-1006, Fig. 4).

[3] A POSA would have also understood that Cidronali's subsampling architecture is not limited to the output of an intermediate frequency (or "IF"), but that the frequency shifters disclosed in both Peroulas and Cidronali are equally capable of returning the signal to baseband (as contemplated by Peroulas). EX-1003, ¶94.

4. Detailed Application to the Challenged Claims

Claim 1

[1pre] ***A transmitter comprising*:**

To the extent that the preamble is limiting, Peroulas discloses a "method for pre-distorting and a pre-distorter," for a *transmitter*. EX-1005, Title, 6:8-27, 14:17-23; EX-1003, ¶95.

[1a] ***a power amplifier configured to amplify modulated concurrent multi-band signals to provide amplified concurrent multi-band signals*;**

Peroulas' "multiband pre-distorter" includes "a power amplifier (PA), which is configured to amplify the combined signal." EX-1005, 6:18-19, 10:8-10, 14:11-12, 23:14-20. This "combined signal" is the *modulated concurrent multi-band signals* PD_1 and PD_2 output from the MIMO Pre-Distortion Module 307 which, when amplified, is the claimed *amplified concurrent multi-band signals*. EX-1005, 22:26-23:9, Fig. 3; EX-1003, ¶96.

While Peroulas does not explicitly call its signals "modulated," input signals BB_1 301 and BB_2 302 are baseband signals used in "the communication field" (EX-1004, Abstract, 1:2-4) and, therefore, would have been understood to be modulated "according to the modulation method use[d] by the telecommunication system of which the [predistorter] forms a part" (*see, e.g.,* EX-1009, 4:63-64; EX-1003, ¶97). Thus, by amplifying the combined predistorted signals PD_1 and PD_2, Peroulas's PA

amplifies *modulated concurrent multi-band signals to provide amplified concurrent multi-band signals*. EX-1003, ¶97.

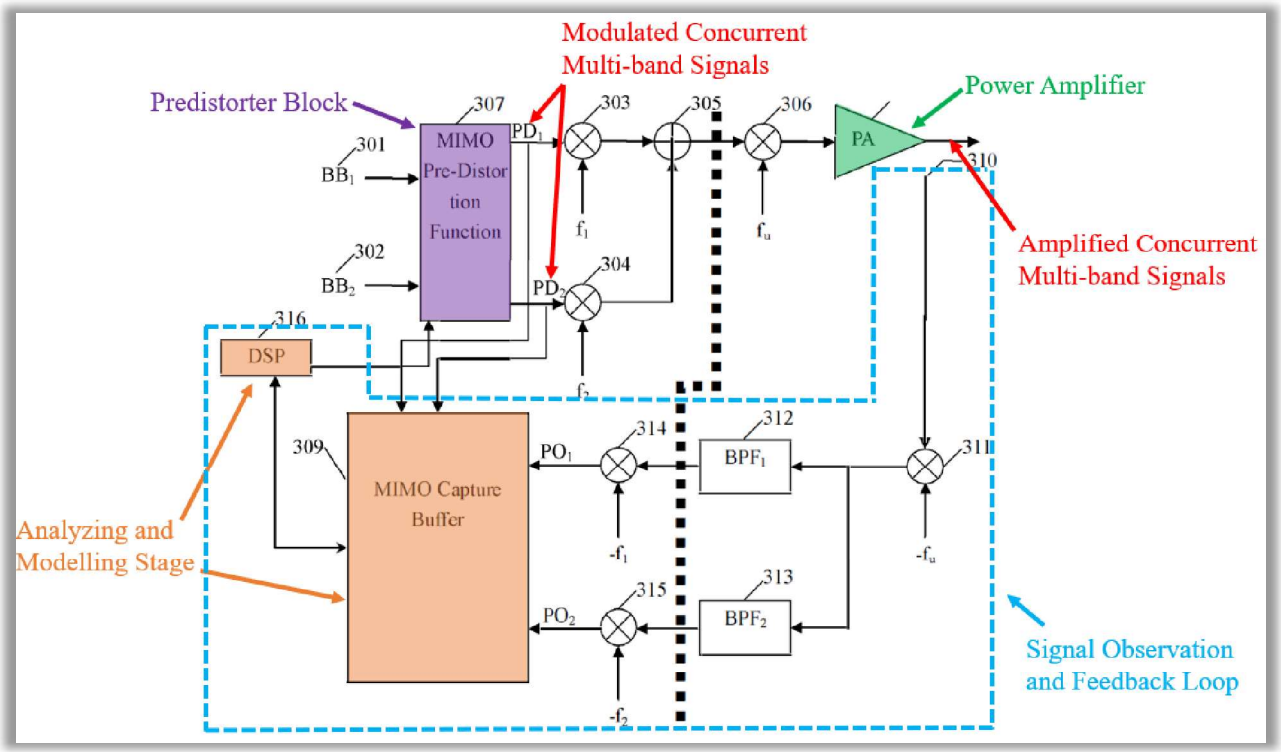

EX-1005, Fig. 4 (Annotated).

[1b] ***a concurrent digital multi-band predistortion block configured to effect predistortion of the modulated concurrent multi-band signals to compensate for a non-linearity of the power amplifier; and***

Peroulas's MIMO Pre-Distortion Module (*concurrent digital multi-band predistortion block*) (purple) predistorts a plurality of baseband signals BB_1 301 and BB_2 302 (*modulated concurrent multi-band signals*) by an equal number of predistortion functions to obtain corresponding predistorted output signals, PD_1 and PD_2. EX-1005, 8:12-14 ("BB_i are baseband input signals, and PD_i are the pre-distorted signals."), 22:26-23:9. "[T]he cascade of the pre-distortion function and

the PA produces a system that is linear overall," thereby *compensating for a non-linearity of the power amplifier*. EX-1005, 14:22-23; EX-1003, ¶¶98-101.

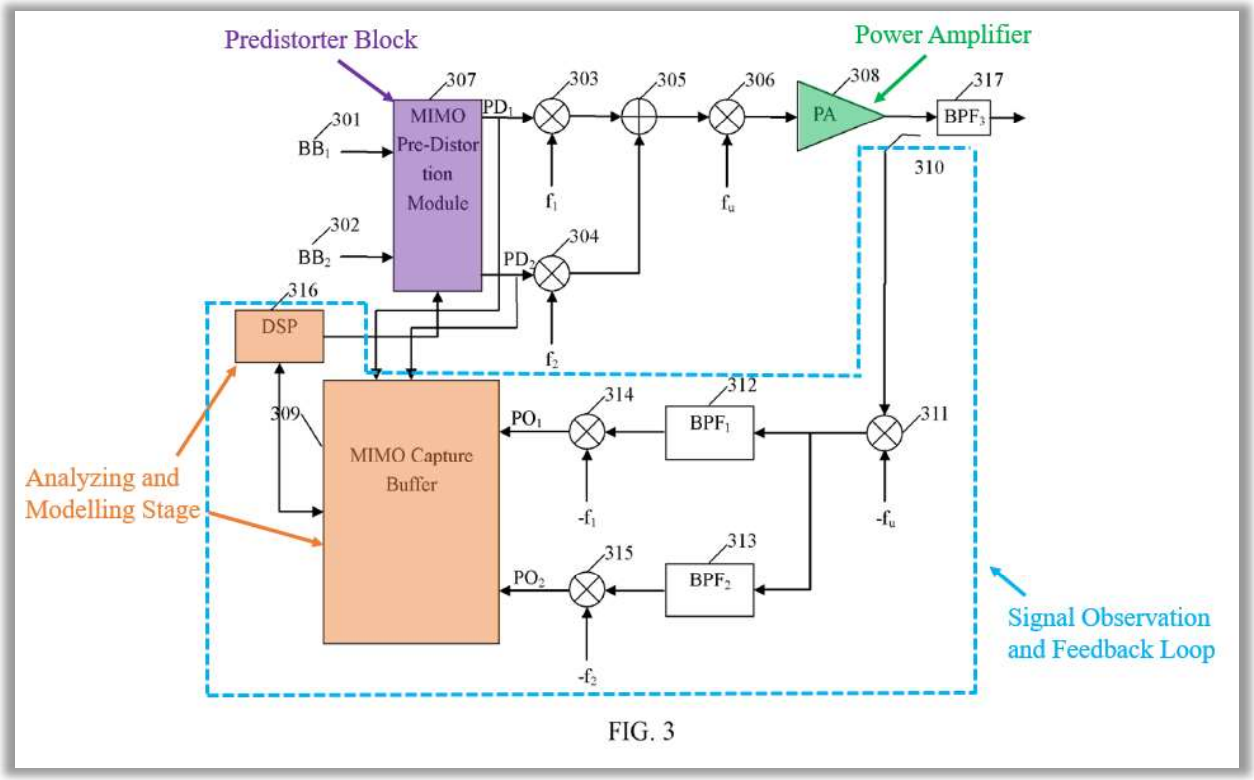

FIG. 3

EX-1005, Fig. 3 (Annotated).

Peroulas' "pre-distortion module includes a plurality of pre-distortion units, wherein all of the baseband input signals input into each pre-distortion unit, and each pre-distortion unit corresponds to one pre-distortion function and has one output." EX-1005, 6:25-27; EX-1003, ¶99. "[O]ne two-input two-output pre-distortion function that can be used for the MIMO pre-distortion function …" is reproduced below:

$$(15)\ PD_1(n) = \sum_{j=0}^{M-1}\sum_{k_1=0}^{L_1-1}\sum_{k_2=0}^{L_2-1} h_{1,j,k_1,k_2} BB_1(n-j)|BB_1(n-j)|^{k_1}|BB_2(n-j)|^{k_2}$$

$$(16)\ PD_2(n) = \sum_{j=0}^{M-1}\sum_{k_1=0}^{L_1-1}\sum_{k_2=0}^{L_2-1} h_{2,j,k_1,k_2} BB_2(n-j)|BB_1(n-j)|^{k_1}|BB_2(n-j)|^{k_2}$$

EX-1005, 24:9-13.

Use of a common index n, within either Equation 15 or 16, confirms that both inputs signals BB_1 and BB_2 are received by each predistortion function concurrently. Moreover, both BB_1 and BB_2 are referenced in each of Equations 15 and 16. Thus, Peroulas' "multiband digital predistorter" is a *concurrent multi-band predistortion block* as concurrent input signals BB_1 and BB_2 enter the block, and concurrent predistorted signals PD_1 and PD_2 exit the block. EX-1005, 22:18-20. Figure 3 also depicts concurrent predistorted signals PD_1 and PD_2 being concurrently input into the MIMO Capture Buffer and thus, for any given number of input signals, a POSA would recognize the output of each predistortion function to be concurrent. EX-1003, ¶100.

Accordingly, Peroulas' MIMO Pre-Distortion Module (*digital multi-band predistortion block*) applies predistortion functions/equations 15 and 16 to obtain predistorted output signals, PD_1 and PD_2 (*effect predistortion of the modulated concurrent multi-band signals*), such that the cascade of the predistortion function

and the PA results in a signal that is linear overall (*compensate for a non-linearity of the power amplifier*). EX-1005, 8:12-14, 22:26-23:9, 14:22-23; EX-1003, ¶101.

[1c] *a signal observation feedback loop configured to effect concurrent sampling of the amplified concurrent multi-band signals at a subsampling frequency lower than twice a highest signal frequency in the amplified concurrent multi-band signals*.

Peroulas discloses that "two signals recorded by the MIMO capture buffer 309 are derived from a signal output from a coupler 310 which extracts a small portion (typically less than 1% of the PA output power) of the signal output from the PA 308." EX-1005, 25:15-22. "The output of the coupler 310 is connected to a frequency shifter 311 which shifts the signal down by f_u Hz." *Id.*, 25:20-22. And as shown in Fig. 4 (dashed line), analog to digital conversion by sampling occurs after BPF_1 312 and BPF_2 313. EX-1005, 30:10-18. The above components, including the ADCs placed on both the top and bottom feedback paths at the dashed line, generate concurrent feedback signals (PO_1 and PO_2) that are simultaneously fed into Peroulas' MIMO Capture Buffer, and constitute *a signal observation and feedback loop configured to effect concurrent sampling of the amplified concurrent multi-band signals*. EX-1005, 26:8-9 ("The outputs from these frequency shifters 314 and 315 are captured by the MIMO capture buffer 309"); EX-1003, ¶¶102-104.

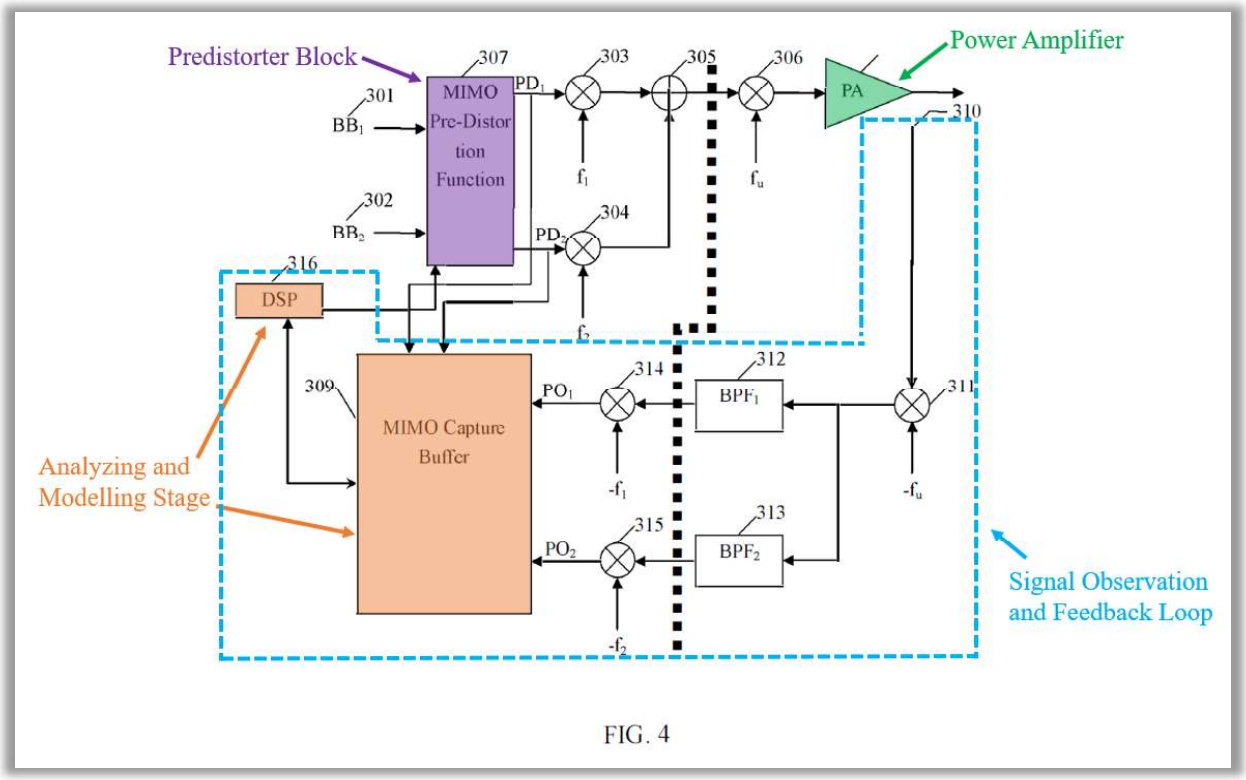

FIG. 4

EX-1005, Fig. 4 (Annotated).

While Peroulas does not expressly describe subsampling an analog signal from the PA to generate a digital signal within its feedback path, Peroulas views feedback sampling as routine skill, explaining that "those skilled in the art will recognize that the digital-analog boundary can be placed in many different locations." EX-1005, 30:17-18. Further, Patent Owner stated in prosecution that it "is well known in the art of signal communication that subsampling is the process of sampling at a frequency less than the Nyquist rate." EX-1002, 167. Thus, a POSA reading Peroulas understood that Peroulas' feedback loop would have been

implemented according to the well-known bandpass theorem and subsampling technique. EX-1003, ¶103.

To the extent that Patent Owner argues that Peroulas does not expressly state *a subsampling frequency lower than twice a highest signal frequency in the amplified concurrent multi-band signals,* a POSA would be motivated to modify the teachings of Peroulas with the teachings of Cidronali to discloses this limitation for the reasons stated above. This would have been as simple as setting Peroulas' ADCs to subsample and adjusting the digital frequency conversion of shifters 314 and 315 to result in baseband signals PO_1 and PO_2. Or Cidronali's single subsampling-based receiver would have been used. EX-1003, ¶104. In either scenario, it would have been obvious to implement Peroulas' feedback loop *at a subsampling frequency lower than twice a highest signal frequency in the amplified concurrent multi-band signals*, as described in Cidronali. *See* §§VII.A.2-A.3 (*supra*).

Claim 2

[2pre] ***The transmitter of claim 1, wherein said concurrent digital multi-band predistortion block further comprises*:**

[2a] ***a plurality of digital baseband signal predistorter blocks, each baseband signal predistorter block having a plurality of first inputs and a single output, the plurality of first inputs corresponding in number to the multiple bands of the multi-band transmitter and each first input corresponding to a single frequency channel.***

Peroulas' MIMO Predistortion Module 307 (purple) includes at least two predistortion units (*a plurality of digital baseband signal predistorter blocks*) each corresponding to a predistortion function. EX-1005, 6:25-27 ("the pre-distortion module includes a plurality of pre-distortion units."), 22:26-23:2. In the dual-band scenario, each predistortion unit receives two baseband inputs and outputs one baseband output (PD_1 and PD_2, respectively): "a plurality of baseband input signals being pre-distorted by an equal number of predistortion functions to obtain equal number of predistorted signal(s) respectively, wherein all of the baseband input signals [are] input into every pre-distortion function, and each pre-distortion function has one output." EX-1005, 10:4-7. Thus, each of Peroulas' baseband signal predistorter blocks has *a plurality of first inputs and a single output, the plurality of first inputs corresponding in number to the multiple bands of the multi-band transmitter*. EX-1003, ¶¶105-109.

The outputs of Peroulas' predistortion function are defined by Equations 15 and 16:

$$(15)\ PD_1(n) = \sum_{j=0}^{M-1}\sum_{k_1=0}^{L_1-1}\sum_{k_2=0}^{L_2-1} h_{1,j,k_1,k_2} BB_1(n-j)|BB_1(n-j)|^{k_1}|BB_2(n-j)|^{k_2}$$

$$(16)\ PD_2(n) = \sum_{j=0}^{M-1}\sum_{k_1=0}^{L_1-1}\sum_{k_2=0}^{L_2-1} h_{2,j,k_1,k_2} BB_2(n-j)|BB_1(n-j)|^{k_1}|BB_2(n-j)|^{k_2}$$

EX-1005, 24:12-23. Equation 15 effects predistortion of input BB_1 301 to generate output signal PD_1, using both BB_1 and BB_2 input signals. In other words, the predistortion corresponding to Equation 15 is a first digital baseband signal predistorter corresponding to band 1 and to the input signal BB_1 and BB_1's occupied frequency range (*i.e.,* "channel"). EX-1003*,* ¶106.

Likewise, Equation 16 effects predistortion of input signal BB_2 302 to generate output signal PD_2 using both BB_1 and BB_2 input signals. The predistortion corresponding to Equation 16 is a second digital baseband signal predistorter corresponding to band 2 and to the input signal BB_2 and BB_2's occupied frequency range. EX-1003*,* ¶107. This is illustrated below.

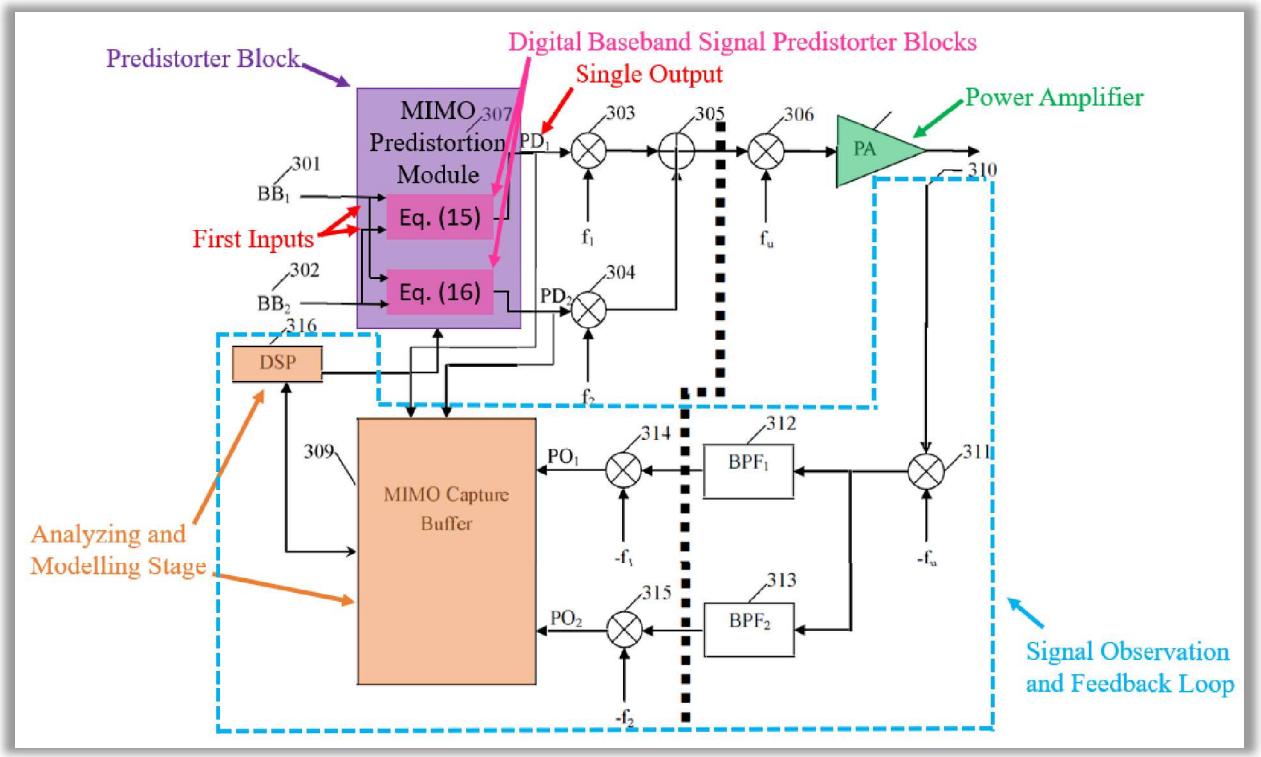

EX-1005, Fig. 4 (Annotated and Modified).

The goal of Equations 15 and 16 "is to produce signals PD_1 and PD_2 sent to the PA 308 such that the output only contains signals BB_1 301 and BB_1 302 centered at frequencies f_{c1} and f_{c2}." EX-1005, 24:1-3. Peroulas' carrier frequencies f_{c1} and f_{c2} each correspond to a single channel located in separate bands. EX-1003, ¶108. This additionally confirms that input signals BB_1 and BB_2 are single frequency channels located in separate bands. *Id.*

In sum, Peroulas' dual-band architecture includes two predistortion units (*a plurality of digital baseband signal predistorter blocks*) each receiving two inputs (BB_1 and BB_2) corresponding to two bands (*a plurality of first inputs corresponding*

in number to the multiple bands of the multi-band transmitter) and each outputting a single signal (PD_1 or PD_2, *a single output*) to be transmitted at f_{c1} and f_{c2}, respectively (*each first input corresponding to a single frequency channel*). EX-1003, ¶109.

<u>Claim 3</u>

[3pre] ***The transmitter of claim 2, wherein said concurrent digital multi-band predistortion block further comprises*:**

[3a] ***a plurality of digital baseband signal predistorter blocks, each baseband signal predistorter block having a plurality of first inputs and a single output, the plurality of first inputs corresponding in number to the multiple bands of the multi-band transmitter and each first input corresponding to a single frequency channel and wherein***

See claim 2 as language is identical.

[3b] ***the signal observation feedback loop includes an analyzing and modeling stage directly connected to each of the plurality of outputs of said digital multi-band predistortion block for receiving the respective predistorted signals and for using said received predistorted signals in controlling said digital multi-band predistortion block.***

Peroulas' MIMO Capture Buffer 309 and the DSP Block 316 (*analyzing and modeling stage*, collectively (orange)) simultaneously receive signals PO_1 and PO_2 taken from the PA, and predistorted signals PD_1 and PD_2, to update and control the MIMO Predistortion Module 307 (purple). EX-1005, 25:15-19; EX-1003, ¶111.

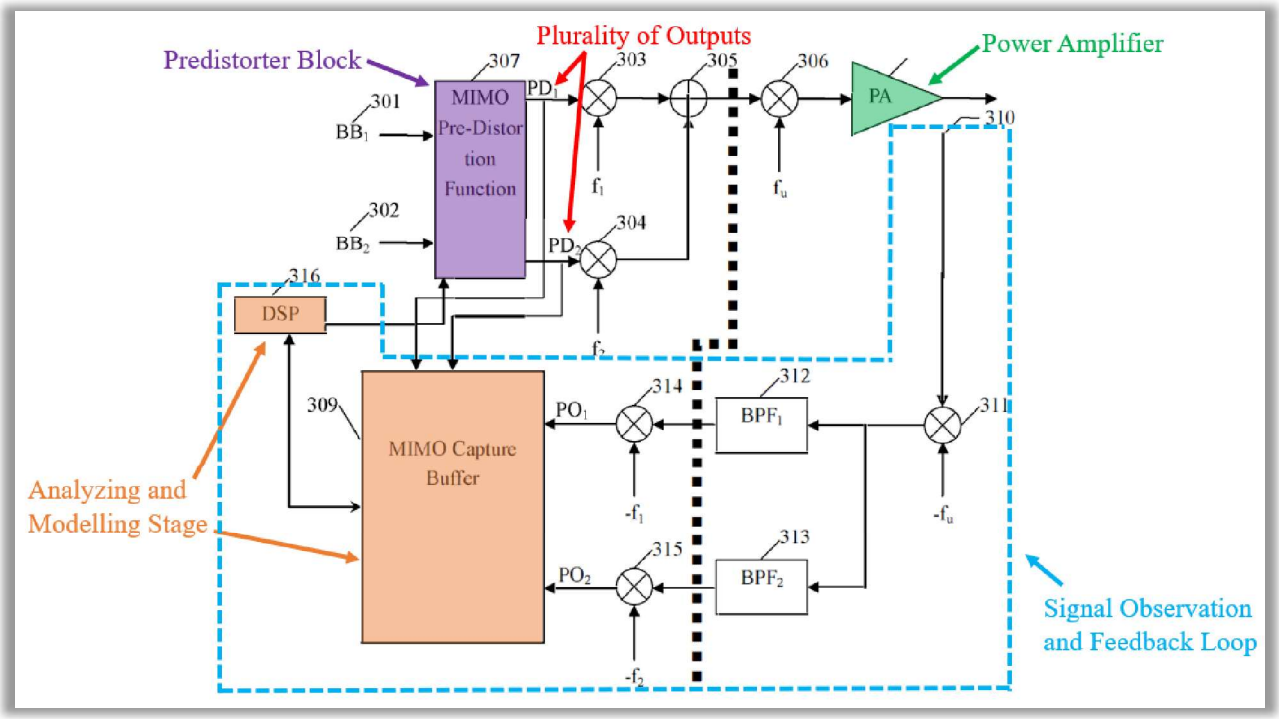

EX-1005, Fig. 4 (Annotated).

To do this, Peroulas' "DSP 316 is used to read out the values captured in the MIMO Capture Buffer 309 and based on the captured values PD_1, PD_2, PO_1 and PO_2," Equations 19 and 20 are solved to obtain estimates $\hat{h}_{i,j,k_1,k_2}$ for the coefficient

values h_{i,j,k_1,k_2} of the predistortion functions (*digital baseband signal predistorters*):

$$(19)\ PD_1(n) = \sum_{j=0}^{M-1}\sum_{k_1=0}^{L_1-1}\sum_{k_2=0}^{L_2-1} \hat{h}_{1,j,k_1,k_2} PO_1(n-j)|PO_1(n-j)|^{k_1}|PO_2(n-j)|^{k_2}$$

$$(20)\ PD_2(n) = \sum_{j=0}^{M-1}\sum_{k_1=0}^{L_1-1}\sum_{k_2=0}^{L_2-1} \hat{h}_{2,j,k_1,k_2} PO_2(n-j)|PO_1(n-j)|^{k_1}|PO_2(n-j)|^{k_2}$$

EX-1005, 26:15-20. The estimated coefficients $\hat{h}_{i,j,k_1,k_2}$ are chosen such that "the cascade of the MIMO pre-distortion function, and the PA will be linear overall." EX-1005, 11:21-22. "After these values have been calculated, the DSP [*analyzing and modeling stage*] transmits these values to the MIMO pre-distortion module [*digital signal predistortion block*] and all of the h_{1,j,k_1,k_2} and h_{2,j,k_1,k_2} values of the MIMO pre-distortion function [*digital baseband signal predistorters*] in the MIMO pre-distortion module will be simultaneously updated and replaced with the $\hat{h}_{1,j,k_1,k_2}$ and $\hat{h}_{2,j,k_1,k_2}$ values." EX-1005, 28:18-21; EX-1003, ¶112.

Accordingly, and exactly as claimed, Peroulas' transmitter uses indirect learning so that MIMO Capture Buffer 309 and the DSP Block 316 (*analyzing and modeling stage*, collectively) model a nonlinearity in the PA and update coefficient values in the predistortion functions (*digital multi-band predistortion block*) to control Peroulas' predistorter. EX-1003, ¶113.

Claim 4

[4pre] ***The transmitter of claim 3, wherein said analyzing and modeling stage further comprises*:**

[4a] ***a plurality of outputs connected to and for updating the parameters of said digital baseband signal predistorter block*;**

Peroulas uses MIMO Capture Buffer 309 and DSP Block 316 (*analyzing and modeling stage*, collectively) to estimate, update, and control the coefficients in the predistortion function (*digital baseband signal predistorters*). EX-1005, 11:22-22, 25:10-11, 25:15-19, 26:10-12, 26:15-18; EX-1003, ¶¶114-116. To update the predistortion function coefficients simultaneously, a POSA understood that Peroulas used a plurality of outputs/traces leading to each predistortion unit. In other words, a POSA understood that Peroulas' disclosure of a single line from DSP 316 to predistorter 307 would include multiple outputs to simultaneously update Peroulas' predistortion units. EX-1003, ¶¶114-115.

To the extent Patent Owner asserts that Peroulas does not state that multiple outputs from the DSP Block are used, a POSA would be motivated to modify the teachings of Peroulas to include multiple outputs to simultaneously update Peroulas' predistortion units and avoid delays associated with processing the predistortion coefficients in serial. A POSA understood that one straightforward and obvious way to implement this would be to include two separate wires/traces from DSP 316 going to each individual predistortion unit. EX-1005, 28:16-25; EX-1003, ¶116; *Game &*

Tech. Co. v. Activision Blizzard Inc., 926 F.3d 1370, 1381 (Fed. Cir. 2019) ("[A] patent can be obvious in light of a single prior art reference if it would have been obvious to modify that reference to arrive at the patented invention.").

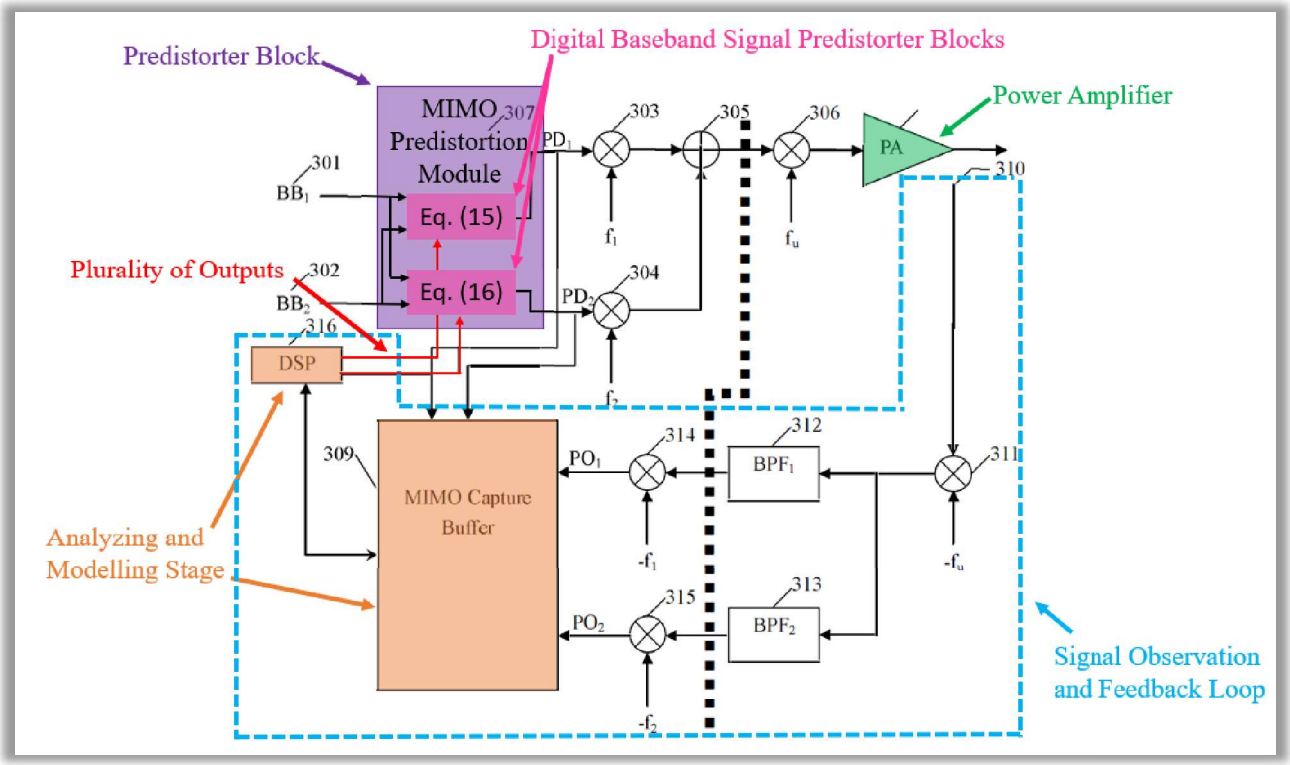

EX-1005, Fig. 4 (Annotated and Modified to show Predistortion Units).

[4b] ***a plurality of inputs connected to said outputs of said signal observation feedback loop.***

Although Claim [3b] states that the signal observation feedback loop includes an analyzing and modeling stage, Claim [4b] is seemingly directed towards a representation where the analyzing and modeling stage is defined as a discrete functional block at the output of the signal observation feedback loop. Despite such naming inconsistencies, element [4b] requires the analyzing and modeling stage to

have a plurality of inputs from the post-PA feedback path, which is disclosed by Peroulas. Peroulas' MIMO Capture Buffer 309 (orange) receives input signals PO_1 and PO_2 taken from the *outputs of said signal observation feedback loop*. EX-1003. ¶117.

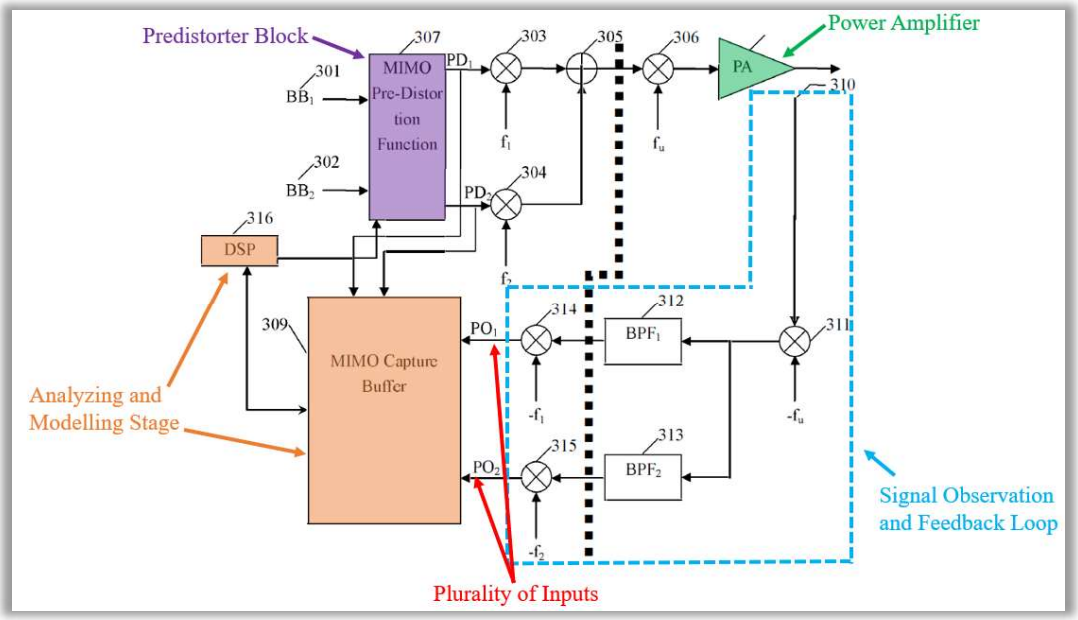

EX-1005, Fig. 4 (Annotated).

<u>Claim 5</u>

[5pre] ***The transmitter of claim 3, wherein said analyzing and modeling stage is further configured to*:**

[5a] ***perform time alignment of complex baseband signals from sampling said outputs of said power amplifier; and***

Peroulas explains that the propagation delay through components will be nonzero, thus the MIMO Capture Buffer 309 (*analyzing and modeling stage*) can compensate for this by inserting an equivalent delay on the PD_1 and PD_2 signals.

EX-1005, 31:1-5 ("It should be clear to one skilled in the art that a real system will have a non-zero delay. This delay can be measured and compensated by inserting an equivalent delay on the PD_1 and PD_2 signals as they enter the MIMO capture buffer 309."). This delay insertion is time aligning the predistorted signals and feedback signals. And because Peroulas' MIMO Pre-Distortion Function 307 operates at baseband, feedback signals PO_1 and PO_2 are similarly frequency shifted back to baseband so that like signals are comparted to one another. EX-1005, 12:6-7 (describing frequency shifting back to "zero" or baseband), 30:19-29; EX-1003. ¶¶118-119.

To the extent Patent Owner argues that Peroulas does not expressly state inserting a delay into either signal PO_1 or PO_2 (*signals from sampling said outputs of said power amplifier*), a POSA would have nonetheless found this either to be part of Peroulas' disclosure, or an obvious and trivial implementation detail. *KSR*, 550 U.S. at 421. Indeed, Peroulas already disclosed that time alignment may be required, and a POSA would have understood that different band pass filters (BPFs 312 and 313) will insert non-zero delays into signals PO_1 or PO_2. And because Peroulas already contemplates inserting delays into the feedback signals, a POSA would have also found it obvious to apply Peroulas' delay insertion technique to time align signals PO_1 and PO_2 to one another. EX-1003, ¶120.

[5b] ***perform the reconstruction of the complex baseband signals from sampling said outputs of said power amplifier*.**

Because the output of Peroulas' PA is an analog signal at an RF frequency, a POSA would have understood that this signal would be digitized and down converted to baseband to then be used in modeling. EX-1003, ¶¶121-122. Peroulas provides an example where the analog, first-feedback signal is digitized by ADCs after BPF_1 312 and BPF_2 313 (as illustrated by the dashed line in annotated Fig. 4, below). EX-1005, 30:10-18. Further, Peroulas includes a two-stage frequency down-conversion architecture to get back to complex baseband using frequency shifters 311 "which shifts the signal down by f_u Hz" (EX-1005, 25:21-22), and frequency shifters 314/315 "which shift the signals down by f_1 and f_2, respectively, to produce [complex baseband] signals PO_1 and PO_2, respectively" (EX-1005, 26:6-8; 30:19-29). By filtering, down-converting, and sampling the output of the PA, Peroulas discloses performing *reconstruction of the complex baseband signals from sampling said outputs of said power amplifier*. EX-1003, ¶¶121-122.

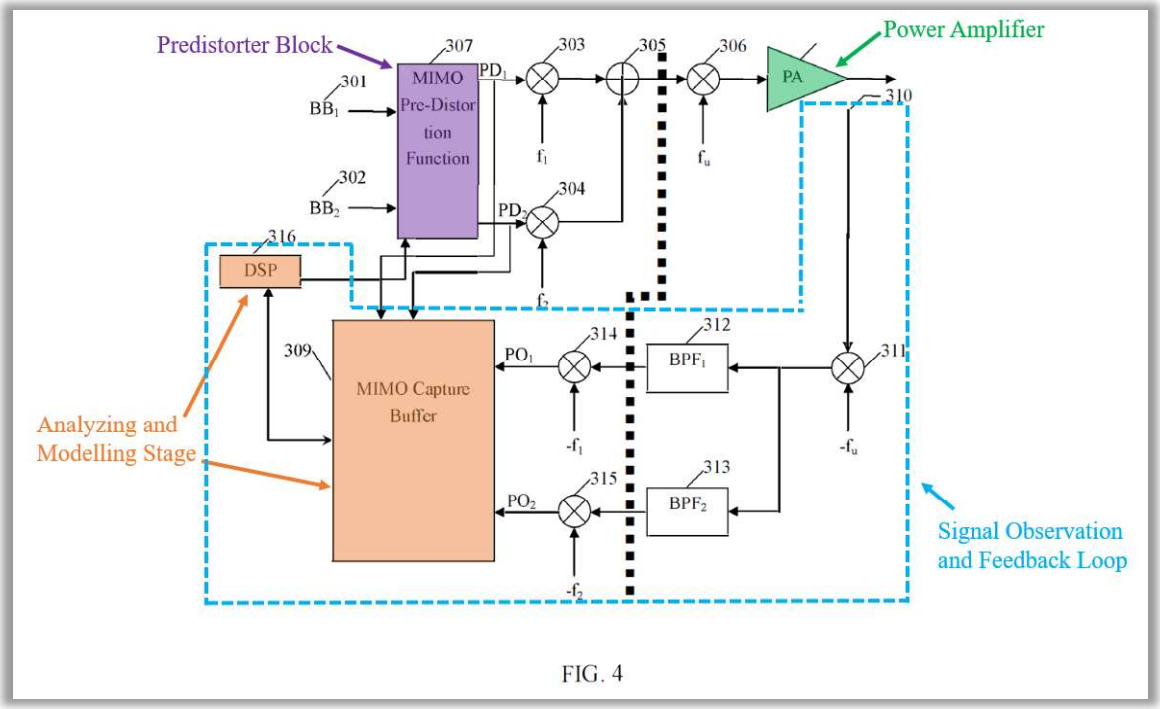

FIG. 4

EX-1005, Fig. 4 (Annotated).

<u>Claim 6</u>

[6pre] ***The transmitter of claim 2, wherein said signal observation feedback loop further is further configured to*:**

[6a] ***down-convert samples of the RF signals at said output of the power amplifier; and***

As explained for Claim 5, Peroulas down-converts samples taken from the output of the PA through a two-stage frequency conversion process. EX-1005, 25:17-19. First, "frequency shifter 311 [] shifts the signal down by f_u Hz" (EX-1005, 25:21-22), then the intermediary signals are band-pass filtered by BPF_1 312 and BPF_2 313 (EX-1005, 25:23-24). The signals are next sampled by ADCs at the dashed line in Fig. 4. EX-1005, 30:10-18. As discussed in §VII.A.3 (*supra*), this sampling

would be performed at a sample rate selected according to the bandpass theorem and subsampling technique. EX-1003, ¶123.

Finally, the signals "are sent into two frequency shifters 314 and 315, which shift the signals down by f_1 and f_2, respectively, to produce signals PO_1 and PO_2, respectively." EX-1005, 26:6-8. The purpose of the above process is "to obtain captured signals PO_i wherein the center frequency of each frequency shifted signal is zero [*i.e.*, down-converted to baseband]." EX-1005, 12:6-7; EX-1003, ¶124.

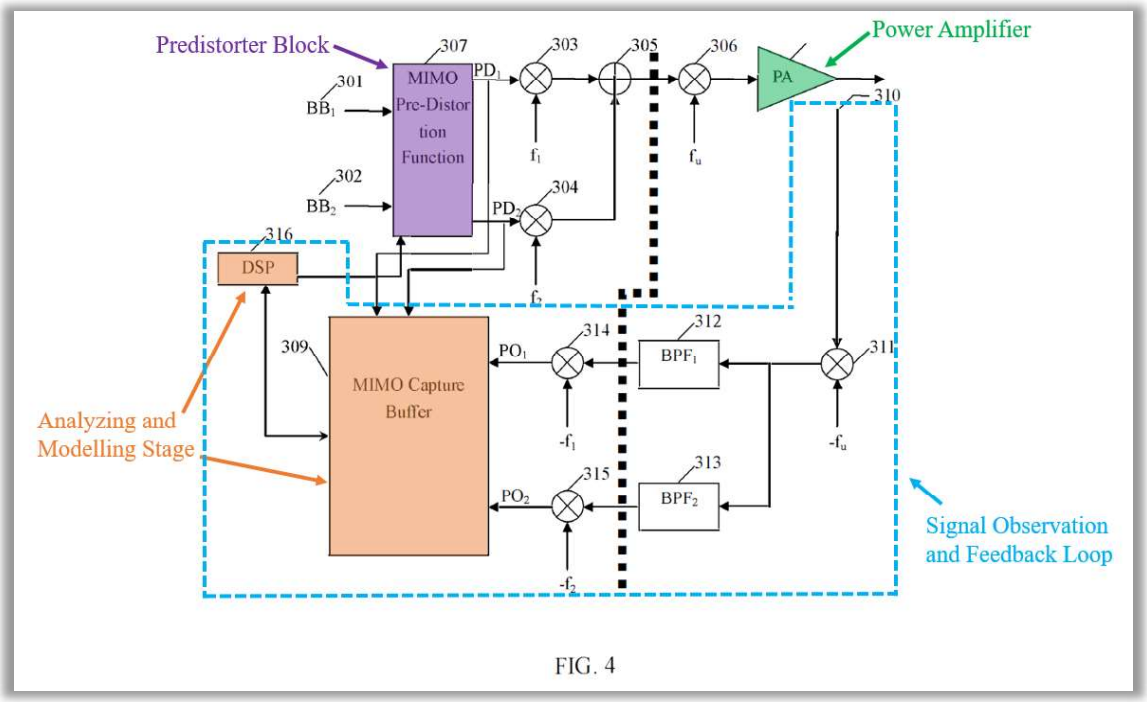

FIG. 4

EX-1005, Fig. 4 (Annotated).

[6b] *extract from said down-converted samples a baseband equivalent for all frequency channels*.

Peroulas' operations of filtering, sampling, and down conversion result in "captured signals PO_i wherein the center frequency of each frequency shifted signal is zero [*i.e.*, baseband]." EX-1005, 12:6-7. As signals PO_1 and PO_2 correspond to a baseband equivalent for all frequency channels (f_1 and f_2), Peroulas discloses limitation [6b]. EX-1003, ¶125.

Claim 7

[7] *The transmitter of claim 2, wherein said signal observation feedback loop further comprises for each channel*

[7a] *an RF filter; a signal down conversion block; and an analog-to-digital converter (ADC)*.

Peroulas' baseband feedback signals PO_1 and PO_2, which are part of Peroulas' *signal observation feedback loop*, are each inputs into the MIMO Capture Buffer 309, and collectively their paths and associated occupied frequencies comprise the channels feeding into the MIMO Capture Buffer. EX-1003, ¶126. To generate these feedback signals, Peroulas uses RF filters, signal down conversion blocks, and ADCs placed on both the top and bottom feedback paths at the dotted line in Fig. 4. Specifically, Peroulas uses, on each channel, band pass filters 312/313 (*RF filters*), frequency shifter 314 at f_1 and frequency shifter 315 at f_2 (*signal down conversion blocks*), and ADCs (*an analog-to-digital converters* (*ADC*)). EX-1005, 25:23-24, 26:6-8, 30:12-18 ("[t]he bold dotted line represents the boundary between the digital

domain and the analog domain … implemented by an A/D converter."); EX-1003, ¶127.

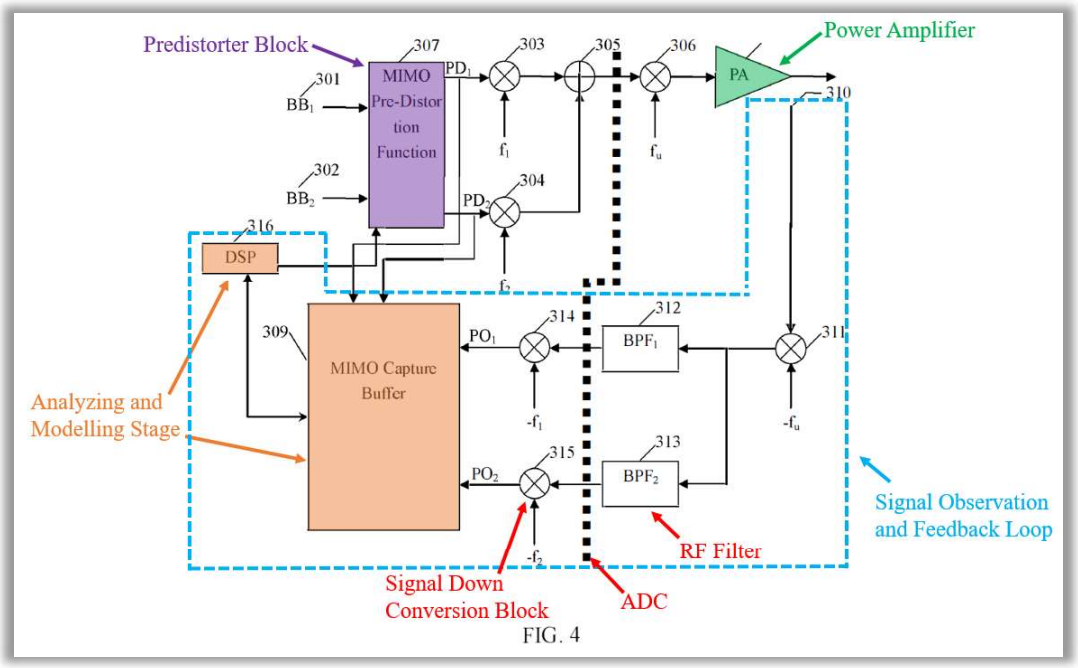

EX-1005, Fig. 4 (Annotated).

<u>Claim 8</u>

[8pre] The transmitter of claim 2, wherein said signal observation feedback loop further comprises:

[8a] a single subsampling-based receiver to down-convert samples output from a concurrent multi-band transmitter.

As discussed above in section VII.A.3, it would have been obvious to implement Peroulas' predistortion system using a subsampling-based feedback loop, including the use of *a single subsampling-based receiver*, as claimed (and as disclosed in Cidronali). Cidronali's subsampling receiver "allows [for] extreme flexibility and coherent dual-band down-conversion" (EX-1006, 000001), thus cost-

effectively down-converting RF samples from Peroulas' transmitter (EX-1003, ¶128).

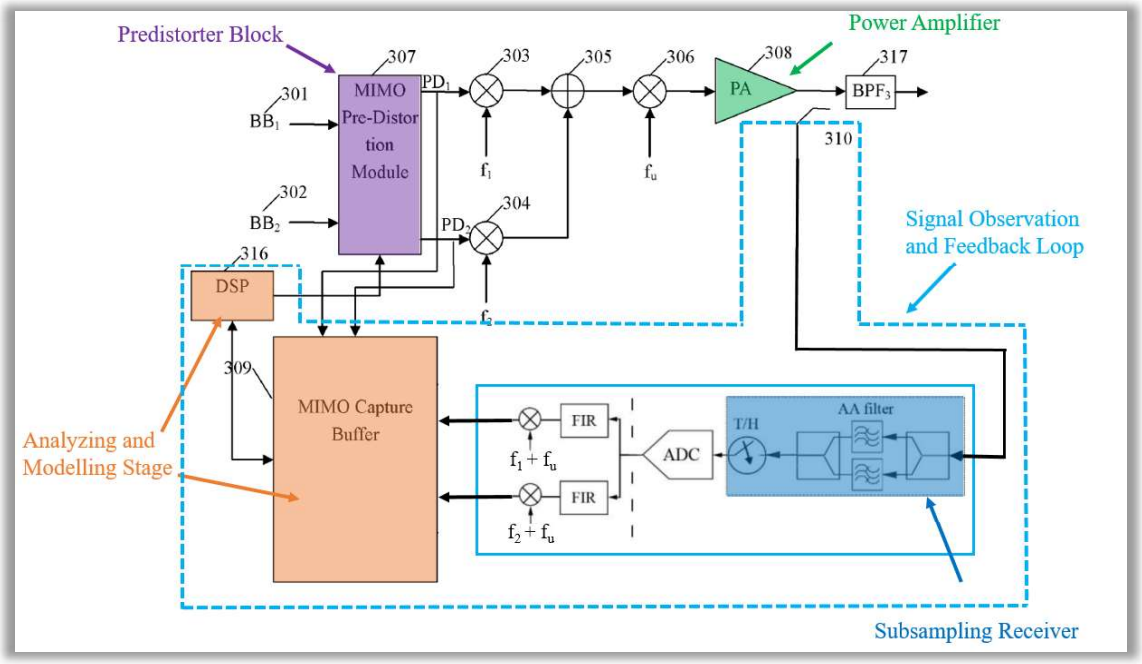

EX-1005, Fig. 3 (Annotated and Modified in View of EX-1006, Fig. 4).

<u>Claim 9</u>

[9pre] ***The transmitter of claim 8, wherein said single subsampling-based receiver further comprises*:**

[9a] ***an RF filter; a track and hold (T&H) block; and an analog-to-digital converter (ADC).***

Cidronali's single subsampling-based receiver uses an anti-aliasing/AA filter (*rf filter),* T/H component *(track and hold (T&H) block)*, and ADC (*an analog-to-digital converter*). EX-1006, Fig. 4. These commonplace components are illustrated below and, because they are so well-understood, Cidronali had to go no further than

to provide a figure depicting an AA filter, T/H, and ADC for a POSA to understand the use of the claimed components. EX-1003, ¶129.

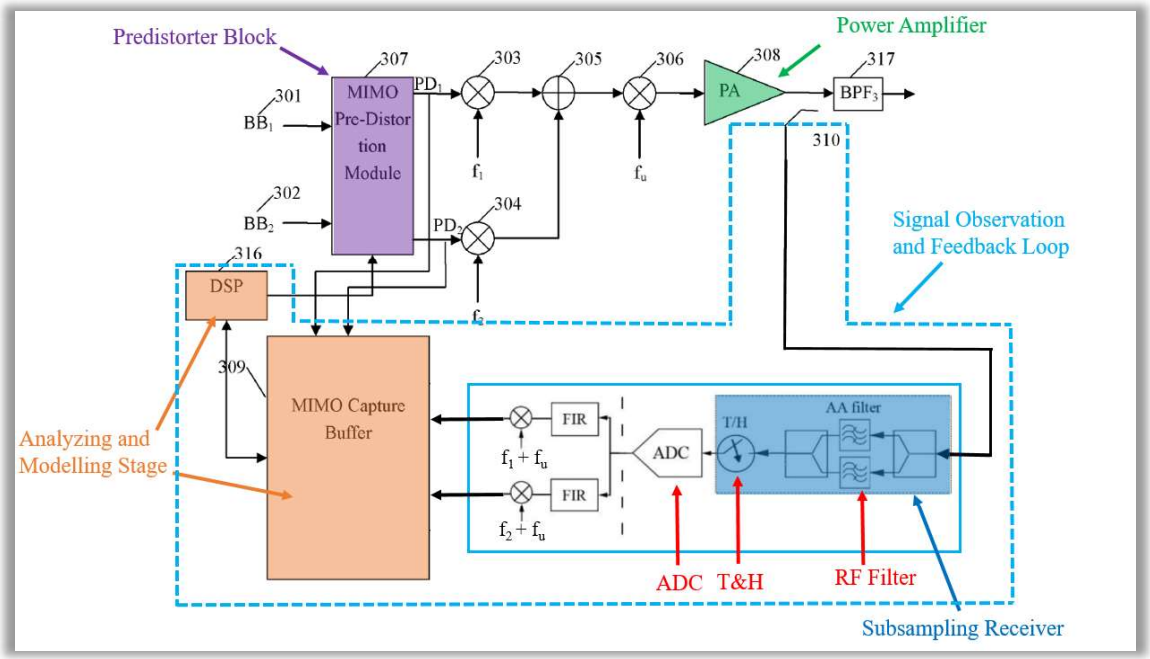

EX-1005, Fig. 3 (Annotated and Modified in View of EX-1006, Fig. 4).

<u>Claim 10</u>

[10] ***The transmitter of claim 1, wherein the subsampling frequency is greater than two times a signal bandwidth of the modulated concurrent multi-band signals.***

Cidronali discloses a subsampling frequency equation for two band-limited signals with center frequencies, f_{c1} and f_{c2}, and bandwidths, B_1 and B_2, respectively. The equation is defined as:

$$f_s \geq 2(B_1 + B_2)$$

EX-1006, 000002. The sampling frequency, f_s, must be selected such that there "will be aliases of the two signals located side-by-side in the first Nyquist zone with no

overlap." EX-1006, 000002. "[T]hat is, the Nyquist zone must be wider than the sum of the two bands." This discloses the use of a *subsampling frequency greater than two times a signal bandwidth of the modulated concurrent multi-band signals*. EX-1003, ¶130.

Claim 11

[11] *The transmitter of clam 1, wherein the subsampling frequency f_s is in a range $2fu/n \leqq f_s \leqq 2h/(n-1)$ where $1 \leqq n \leqq |fu/B|$, and where B is a bandwidth of the amplified concurrent multi-band signals, and f_L f_u, are respective lower and upper frequencies of the bandwidth, and n is an integer.*[4]

Cidronali discloses a condition, $f_s \geq 2(B_1 + B_2)$, for selecting a subsampling frequency such that the aliased multi-band signals do not overlap. EX-1006, 000002. Cidronali does not expand on the subsampling equations; however, these were well-known to a POSA. First, Patent Owner admitted during prosecution that subsampling was well known. *See* EX-1002, 167. Second, and as explained in the State of the Art (§VI.A.3, *supra*), others had published the same subsampling equations included in the '204 Patent's specification and known to determine an acceptable alias-free sample rate:

$$\frac{2f_H}{n} \leq f_s \leq \frac{2f_L}{n-1} \qquad (1)$$

[4] For the purposes of this Petition, Petitioners have assumed that Claims 11 and 15 were meant to capture the '204 Patent's equation (2).

$$n_{max} = \left\lfloor \frac{f_H}{f_H - f_L} \right\rfloor \quad (2)$$

See, e.g., EX-1016, Equations (3.4.3) and (3.4.4). In these equations, f_H and f_L are the higher and lower frequencies of the bandwidth, where n is an integer. f_H and f_L map directly to f_U and f_L, as claimed. Further, f_H - f_L corresponds to the bandwidth of the lower and upper frequencies (*i.e.*, B = f_H - f_L), as claimed. EX-1003, ¶¶131-132.

<u>Claim 12</u>

[12pre] ***A method at transmitter comprising*:**

See limitation [1pre].

[12a] ***amplifying a modulated concurrent multi-hand signal to provide an amplified concurrent multi-band signal*;**

See limitation [1a].

[12b] ***predistorting the modulated concurrent multi-hand signal to compensate for a non-linearity of the power amplifier*:**

See limitation [1b].

[12c] ***subsampling of the amplified concurrent multi-band signals at a subsampling frequency lower than twice a highest signal frequency in the amplified multi-band signal*: and**

See limitation [1c].

[12d] ***controlling the predistorting by the subsampled concurrent multi-band signal.***

See limitations [1b] and [3b].

Claim 13

[13] ***The method of claim 12, wherein the subsampling frequency is greater than two times a signal bandwidth of the modulated concurrent multi-band signal.***

See Claim 10.

Claim 14

[14] ***The method of claim 12, wherein the subsampling frequency is chosen to avoiding aliasing between replicas.***

In addition to the explanations for Claims 10 and 11, Cidronali's dual-band subsampling receiver defines its subsampling frequency according to $f_s \geq 2(B_1 + B_2)$, such that the proper selection of f_s will result in "aliases of the two signals located side-by-side in the first Nyquist zone with no overlap." EX-1006, 000002. By being in the first Nyquist zone "with no overlap," Cidronali's subsampling frequency has been *chosen to avoid aliasing between replicas*. EX-1003, ¶139.

Claim 15

[15] ***The method of claim 14, wherein the chosen subsampling frequency fs for a given signal bandwidth and carrier frequency fc is in the range $2fu/n \leqq f_s \leqq 2h/(n-1)$ where $1 \leqq n \leqq \lceil fu/B \rceil$ and where B is a bandwidth of the amplified concurrent multi band signal, and f_L, f_u are respective lower and upper frequencies of the bandwidth, and n is an integer.***

See Claim 11.

B. Ground 2: Claims 1-15 are Obvious over Posti Alone or in View of Cidronali.

1. Posti

Posti discloses a "multi-frequency carrier transmitter" including a plurality of input signals each corresponding to a channel ("User 1 Data" through "User N Data") and a plurality of digital modulators 106 (purple) to predistort these signals before amplification by PA 122 (green). EX-1009, 2:43-60, 4:66-5:5, 5:13-15, 5:41-42. Posti uses indirect learning to estimate and linearize the distortion introduced by the PA and includes adaptive predistorter 108 (orange) that receives feedback signals from the output of the PA (light blue) and the output of the digital modulators (pink). EX 1009, 5:50-52, 6:23-33; EX-1003, ¶¶141-142.

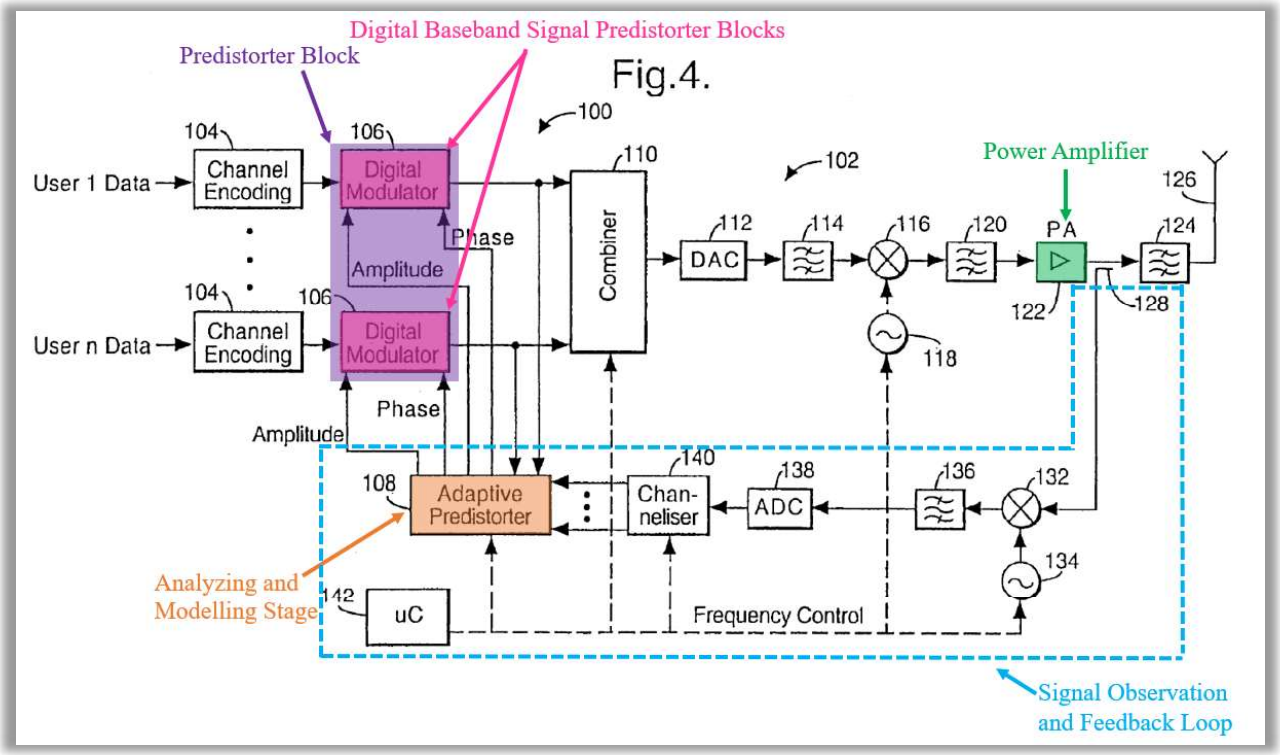

EX-1009, Fig 4 (Annotated).

Posti explains that "embodiments of the present invention can be used with any suitable transmitter which is sending signals at more than one frequency at the same time" (EX-1009, 9:49-52), directly disclosing and suggesting that Posti's "multi-frequency carrier transmitter" (*id.*, Abstract) is equally applicable to "multi-band" transmission systems. In other words, a POSA understood Posti's input channels "User 1 Data" through "User n Data" encompass inputs for the different frequency channels located in the multiple bands used in a multi-band system. EX-1003, ¶143.

2. Motivation to Modify the Teachings of Posti with the Teachings of Cidronali

Posti discloses the claimed linearized transmitter, including a signal observation feedback loop configured to effect concurrent sampling (as recited in Claim 1). It was also known, as explained in the State of the Art, that the sampling rate of Posti's feedback loop would either be configured according to the Nyquist rate or subsampled at a rate lower than Nyquist. Indeed, Patent Owner admitted during prosecution that subsampling below Nyquist "is well known in the art of signal communication." EX-1002, 167. Thus, a POSA understood that Posti's feedback loop would have used a sampling frequency rate *lower than twice a highest*

signal frequency in the amplified concurrent multi-band signal. EX-1003, ¶¶144-150.

Alternately, to the extent Patent Owner argues that a subsampling rate is not expressly stated in Posti, a POSA would be motivated to modify the teachings of Posti with Cidronali's subsampling teachings. EX-1003, ¶145. *First*, a POSA would have been motivated to modify the teachings of Posti to subsample for the benefit of reducing the complexity and cost of predistorter implementation. Posti itself recognizes the desirability of reducing transmitter costs (EX-1009, 1:60-61), and Petitioners' proposed combination achieves cost reduction by minimizing the need for expensive components. *See* §V.A.3 (*supra*); EX-1019, 3:65-67; EX-1001, 2:3-8; EX-1003, ¶145.

Second, for multiband signals, uniform sampling according to the Nyquist rate can be an inefficient method requiring more components to capture the signal, which increases the complexity of the system. EX-1016, 189. Subsampling addresses this. EX-1003, ¶146. In fact, Cidronali explains that subsampling and its exemplary subsampling receiver "can be adapted to down-convert two (or more) band-limited signals," making it an ideal choice for multiband implementations. EX-1006, 000002. Thus, a POSA would have been motivated to minimize and simplify Posti's feedback path in a manner that is more efficient with the inclusion of subsampling. Similarly, Posti itself suggests that the disclosed invention would be obvious to

implement with different frequency conversion architectures (EX-1009, 9:30-33), and that only a "small part" of Posti's amplified signal needs to be captured as feedback (EX-1009, 5:50-57). All of this would have suggested the use of subsampling to a POSA. EX-1003, ¶146; *KSR*, 550 U.S. at 421.

Third, a POSA would have understood that by subsampling, Posti's post-PA feedback architecture would allow for direct down conversion from the carrier frequency to an intermediate frequency, resulting in cost savings by reducing the number of components and also increasing PA performance. *Fourth*, by subsampling and down-converting in the digital domain, such as done in Cidronali, Posti's system would more easily accommodate a wide range of frequency bands. These additional benefits would have provided further motivations to subsample as part of Posti's feedback loop. EX-1003, ¶¶147-148.

Modifying the teachings of Posti to include subsampling would have also been achieved with a reasonable expectation of success, with the only difference being the mechanics of how the PA's feedback signals are fed into Posti's adaptive predistorter. By way of example, the selection of a subsampling rate with Posti's predistorter would have been implemented by simply setting the sampling frequency of Posti's ADC 136 according to the bandpass theorem and subsampling technique. This would require no structural modification to Posti, as shown below. EX-1003, ¶149.

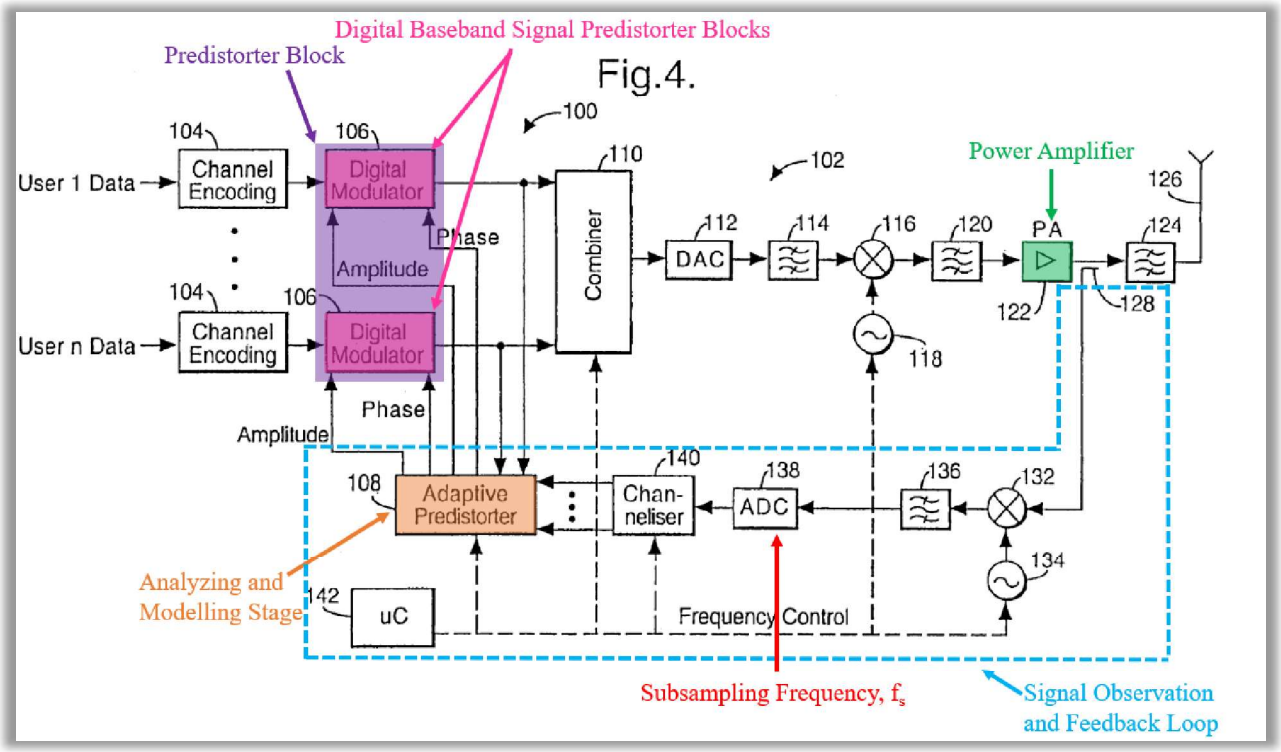

EX-1009, Fig. 4 (Annotated).

Cidronali's further teachings include using a single subsampling-based receiver, such as that depicted in Cidronali's Fig. 4, which provides even greater cost savings by further reducing the number of components. Thus, a POSA would have also been motivated to implement Posti's RF filter 136 and mixer 132 with Cidronali's teaching of a single subsampling receiver. Posti's channelizer 140 and ADC 136 would not need modification to support Cidronali's subsampling components. The motivating factors to use subsampling with Posti, generally, are equally applicable to a POSA's motivation for using a single-subsampling receiver with Posti. EX-1003, ¶150.

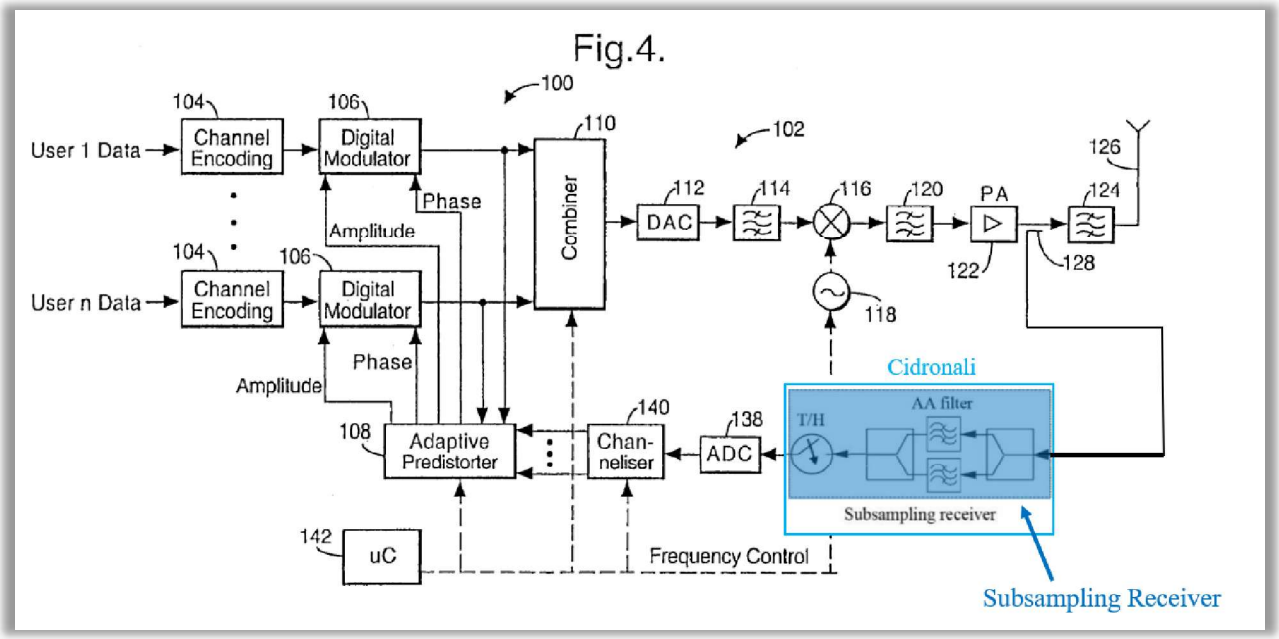

EX-1009, Fig. 4 (Modified in View of EX-1006, Fig. 4).

3. Detailed Application to the Challenged Claims

<u>Claim 1</u>

[1pre] ***A transmitter comprising*:**

To the extent the preamble is limiting, Posti discloses a multi-frequency carrier transmitter using predistortion which "solves or at least mitigates the problems caused by a nonlinear amplifier." EX-1009, 2:40-42; EX-1003, ¶151.

[1a] ***a power amplifier configured to amplify modulated concurrent multi-band signals to provide amplified concurrent multi-band signals*;**

Posti's multi-frequency carrier transmitter includes a *power amplifier* and uses a plurality of digital modulators 106 (pink) to modulate and predistort signals prior to amplification. EX-1009, 4:49-60; EX-1003, ¶¶152-154. The digital modulators 106 are arranged to "modulate the output of the respective channel

encoders 104 according to the modulation method use by the telecommunications system." EX-1009, 4:61-64. The outputs of the digital modulators are concurrently supplied to a signal combiner 110 that "combine[s] the outputs of all of the modulators 106 to provide a single output." EX-1009, 5:13-14. The combined signal (*modulated concurrent multi-band signals*) is then supplied to a power amplifier 122 (green), which "amplifies the received input" (EX-1009, 5:41-42) and results in *amplified concurrent multi-band signals*.

Additionally, and as discussed above in §V.D and §VII.B.1, Posti's teachings are equally applicable to signal inputs for the different frequency channels used in a multi-band system. EX-1003, ¶153. Posti explains that its teachings are suitable for any transmitter that sends "signals at more than one frequency at the same time" (EX-1009, 9:49-52), which is true of multi-band transmitters, meaning that a POSA understood Posti's input signals "User 1 Data" through "User n Data" to encompass inputs for the different frequency channels used in a multi-band system. In other words, in the context of a single PA that can transmit signals located in different frequency bands, a POSA understood that Posti's plurality of digital modulators 106 apply predistortion across a first channel within a first band, and a second channel within a second band. EX-1003, ¶53.

Accordingly, Posti's PA amplifies *modulated concurrent multi-band signals to provide amplified concurrent multi-band signals*. EX-1003, ¶154.

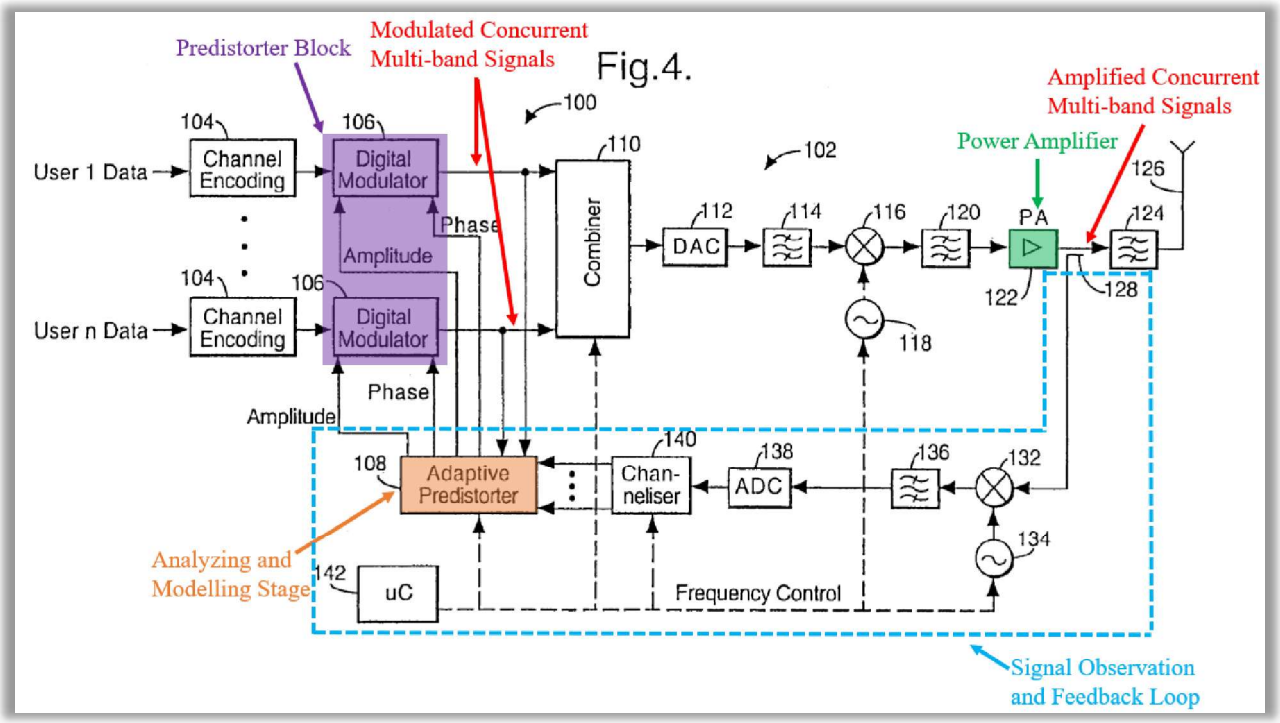

EX-1009, Fig. 4 (Annotated).

[1b] ***a concurrent digital multi-band predistortion block configured to effect predistortion of the modulated concurrent multi-band signals to compensate for a non-linearity of the power amplifier; and***

The combination of Posti's plurality of digital modulators 106 (pink) disclose the claimed *concurrent digital multi-band predistortion block.* EX-1009, 4:49-60; EX-1003, ¶155. The digital modulators 106 receive baseband input signals, represented in Posti's figures as "User n Data" (*modulated concurrent multi-band signals*), to be transmitted on particular frequencies from the output of the channel encoding block 104. EX-1009, 4:35-41, 4:43-44 ("As mentioned hereinbefore, each channel is on a different frequency after the modulator."). The digital modulators are arranged to "modulate the output of the respective channel encoders 104 according

to the modulation method use[d] by the telecommunications system" (EX-1009, 4:61-64), "pass that input through a shaping filter and mix the signal with a carrier signal at an intermediate frequency" (EX-1009, 4:61-64), and "[apply] predistortion to compensate for the phase and amplitude distortion introduced by the amplifier 122" (EX-1009, 5:6-7). As to the ordering of these operations, Posti states that the application of the amplitude and phase predistortion coefficients (*effect[ing] predistortion*) can be performed during or after modulation of the "User Data" input signals. EX-1009, 5:6-10; EX-1003, ¶155.

Thus, Posti's digital modulators 106 are the claimed *concurrent digital multi-band predistortion block*, which are *configured to effect predistortion of the modulated concurrent multi-band signals to compensate for a non-linearity of the power amplifier*. EX-1003, ¶156.

[1c] *a signal observation feedback loop configured to effect concurrent sampling of the amplified concurrent multi-band signals at a subsampling frequency lower than twice a highest signal frequency in the amplified concurrent multi-band signals*.

Posti discloses a signal observation feedback loop configured to effect concurrent sampling of the amplified concurrent multi-band signals. EX-1003, ¶¶156-162. For example, Posti's coupler 128 is "arranged to sample a *small part* of the signals which are transmitted." EX-1009, 5:51-52 (emphasis added); *see also id*., 5:52-57. The "small part" of the signal extracted by coupler 128 is then converted to

an intermediate frequency by mixer 132 (EX-1009, 5:58-66), digitized by ADC 138, and divided "into the N different frequencies corresponding to the frequencies on which those signals were transmitted" by channeliser 140. EX-1009, 6:12-16. The combination of the foregoing component, which provides concurrent feedback signals at the output of the channeliser 140, *effects concurrent sampling of the amplified concurrent multi-band signals*. EX-1003, ¶158.

Channelizer 140 then supplies the concurrent feedback signals to the adaptive predistorter 108 to compare "for each frequency the signal which was transmitted with the signal output by the respective digital modulator 106. For each frequency it is determined if the current predistortion coefficients are acceptable and if not calculates new coefficients to be used for that channel." EX-1009, 6:40-45. The above-described components and processes disclose *a signal observation feedback loop configured to effect concurrent sampling of the amplified concurrent multi-band signals* (light blue). EX-1003, ¶159.

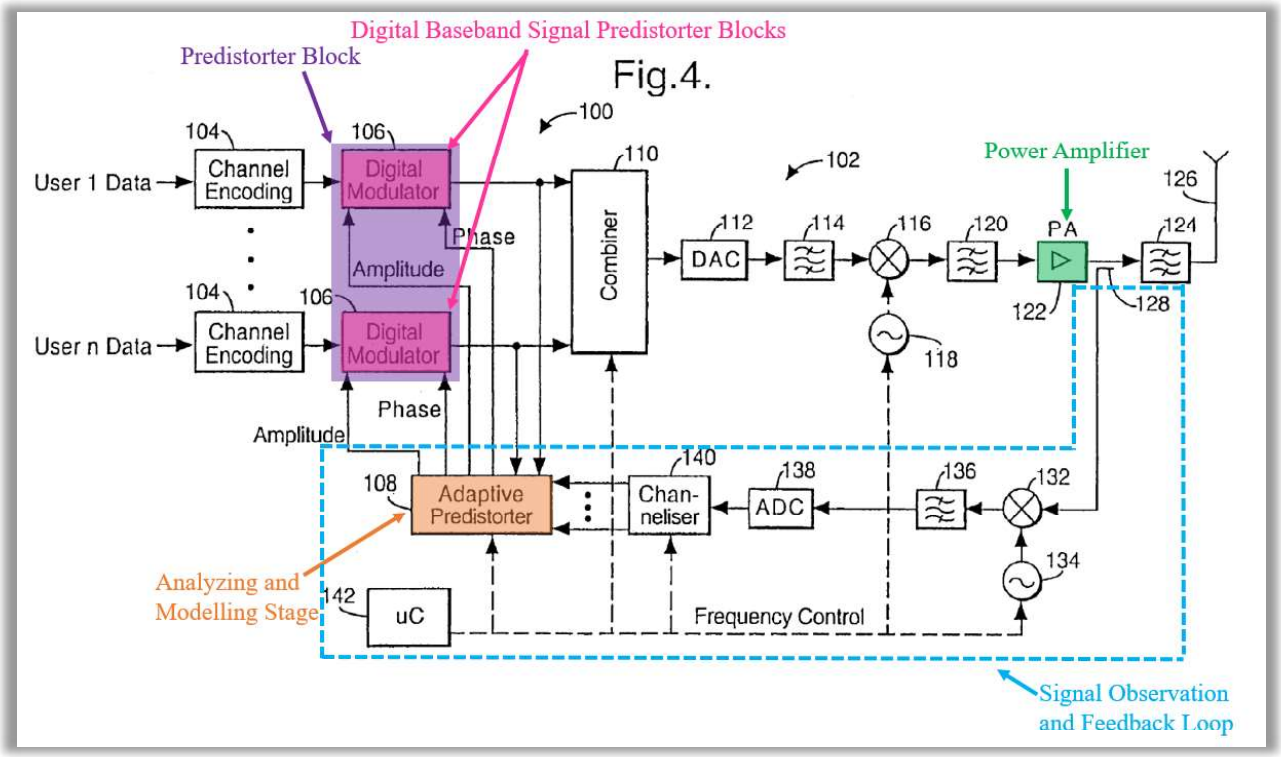

EX-1009, Fig. 4 (Annotated).

Although Posti does not expressly state subsampling an analog signal from the PA to generate a digital signal within its feedback path at *a subsampling frequency lower than twice a highest signal frequency in the amplified concurrent multi-band signals*, as admitted by Patent Owner during prosecution, that was "well known in the art of signal communication." EX-1002, 167. Thus, a POSA reading Posti understood that Posti's feedback loop would have been implemented according to the well-known bandpass theorem and the associated use of subsampling. EX-1003, ¶160.

To the extent that Patent Owner argues that Posti does not expressly state *a subsampling frequency lower than twice a highest signal frequency in the amplified concurrent multi-band signals,* a POSA would be motivated to modify the teachings of Posti with the teachings of Cidronali to discloses this limitation for the reasons stated above. This would have been as simple as setting Posti' ADCs to sample at a rate lower than twice a highest signal frequency (subsample), or through use of a single subsampling-based receiver. For example, the obvious use of an ADC with subsampling frequency F_s is illustrated below. EX-1003, ¶161.

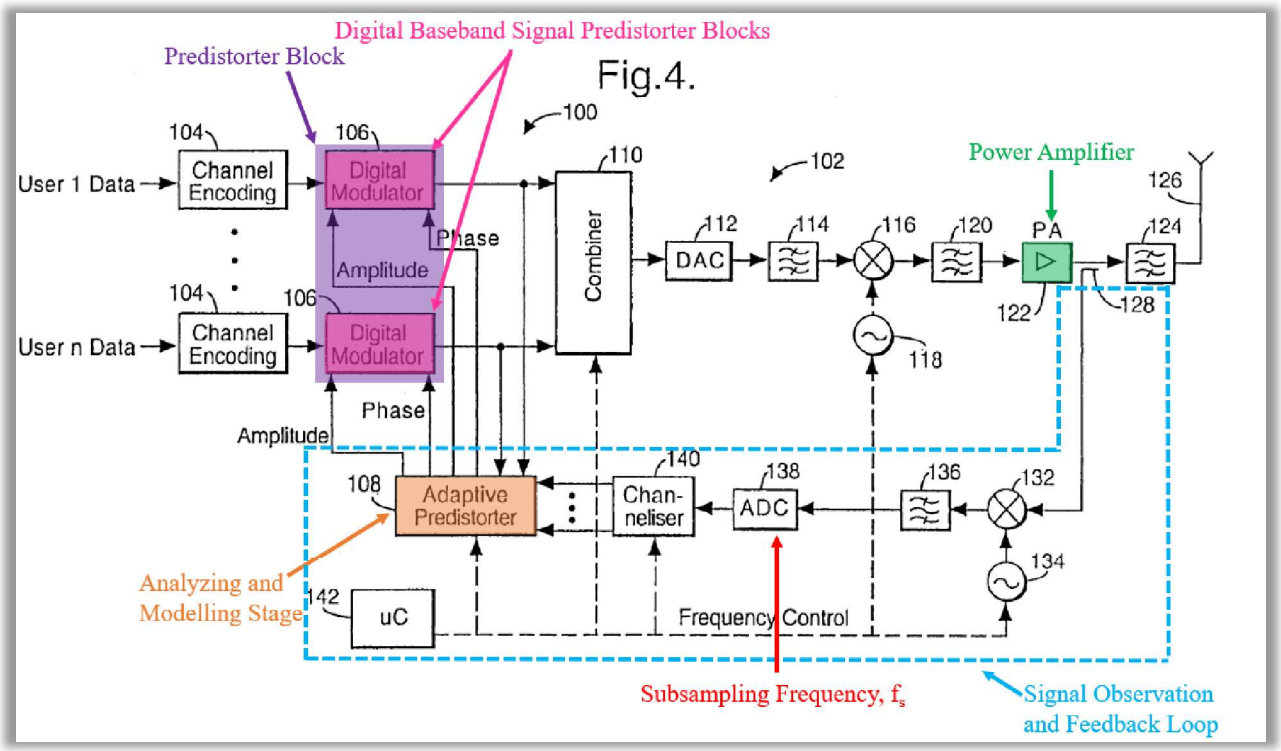

EX-1009, (Fig. 4 Annotated and Modified).

Further, as discussed in Ground 1, it was known that Cidronali's subsampling receiver would operate using the well-known subsampling equations discussed in Petitioners' State of the Art (§V.A.3 (*supra*); EX-1016, Equations (3.4.3) and (3.4.4)); EX-1003, ¶162.

Claim 2

[2pre] ***The transmitter of claim 1, wherein said concurrent digital multi-band predistortion block further comprises*:**

[2a] ***a plurality of digital baseband signal predistorter blocks, each baseband signal predistorter block having a plurality of first inputs and a single output, the plurality of first inputs corresponding in number to the multiple bands of the multi-band transmitter and each first input corresponding to a single frequency channel.***

Posti discloses that each N-number of channel encoders 104 "receives the data to be transmitted on the particular frequency associated with the given channel encoder 104." EX-1009, 4:38-40. The number of channel encoders, therefore, corresponds to the number of frequencies on which the system will transmit. EX-1003, ¶163. "The output of each channel encoder 104 is [then] input to a respective digital modulator 106" (*plurality of digital baseband signal predistorter blocks*) (EX-1009, 4:48-49) and, similarly, the number of digital modulators corresponds to the number of frequencies on which the system will transmit (EX-1003, ¶163).

In this way, Posti's predistorter includes an equal number of digital modulators to the number of bands of the multi-band transmitter, with *each first input corresponding to a single frequence channel*. For example, in a dual-band

implementation, Posti's multi-frequency carrier transmitter would receive user data 1 and user data 2, each corresponding to a single frequency channel to be transmitted at respective frequencies in band 1 and band 2 (*each baseband signal predistorter block having a plurality of first inputs*). EX-1003, ¶164. And as shown below, each digital modulator includes a *single output*. EX-1009, 5:11-12 (describing the "output" of "each of the digital modulators 106 are input to a signal combiner 11 and to the adaptive predistorter 108").

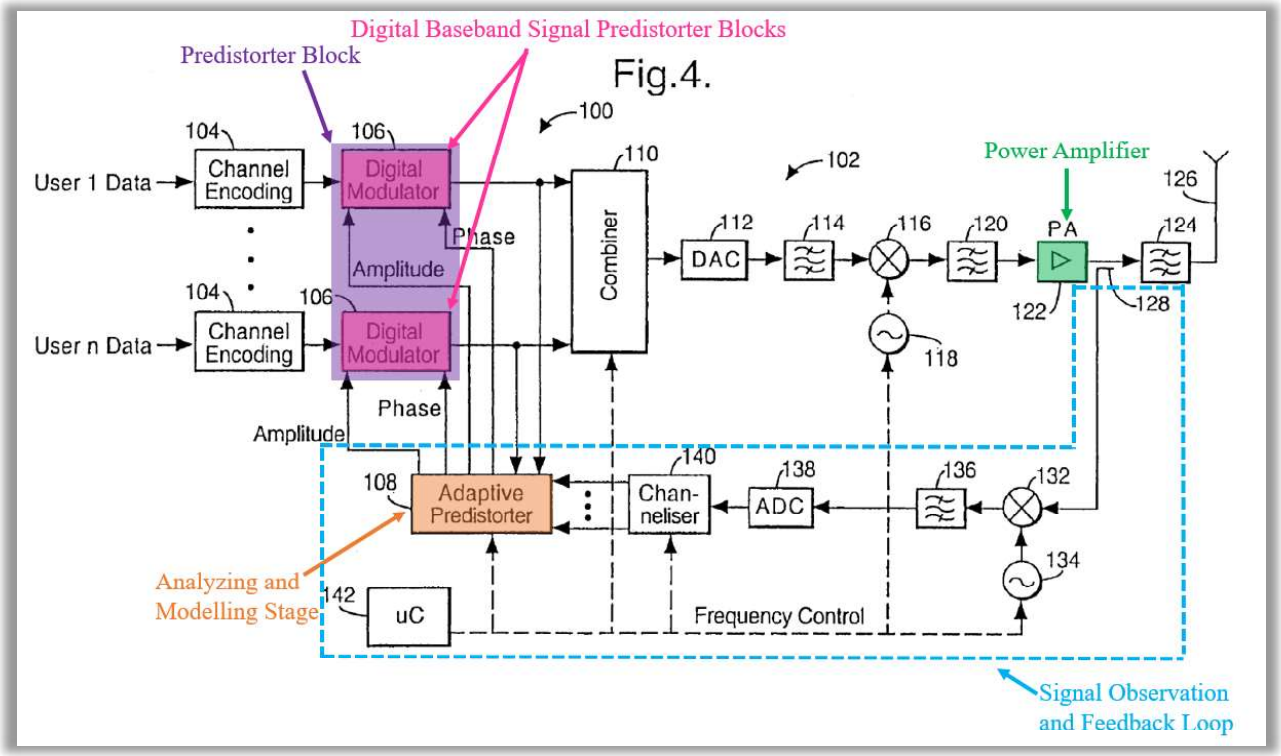

EX-1009, Fig. 4 (Annotated).

Further, because "each of the individual channels are input to the adaptive predistorter on the input side and the individual channels are received from a

channeliser on the output side," Posti's predistortion coefficient are "calculated by the adaptive predistorter [] based on all of the carriers, [which] allows [for] optimal performance to be obtained since all the information is available." EX-1009, 6:63-7:3. Tellingly, this is consistent with the '204 Patent's explanation that the "predistorted inputs, X_{pd1} and X_{pd2}, 115 as well as the output of each band of the PA, y_1 and y_2, 160 are used to generate the predistorter signal processing model 110." EX-1001, 3:64-67; EX-1003, ¶165.

And while Posti does not expressly depict that each baseband signal predistorter block has a plurality of first inputs corresponding to the number of bands, a POSA understood that for dual-band implementations of Posti, each of Posti's digital modulators would be configured in this way. EX-1003, ¶166. For example, and as explained in §V.A.2 (State of the Art), it was known that because the cross-products between a dual-band signal appear in both frequency bands, "the predistorter also requires $x_1(n)$ and $x_2(n)$ [band 1 and band 2 input signals] for predistortion." *See, e.g.,* EX-1021, 134. In view of this knowledge and Posti's express disclosure that its invention "can be modified so that the frequency, distortion etc. on the other carriers are taken into consideration," (EX-1009, 9:14-17), a POSA understood to implement Posti's digital modulators (when working with multi-band signals) such that each modulator receives a copy of each input signal, as illustrated below. EX-1003, ¶166; *Activision*, 926 F.3d at 1381 ("[A]

patent can be obvious in light of a single prior art reference if it would have been obvious to modify that reference to arrive at the patented invention.”).

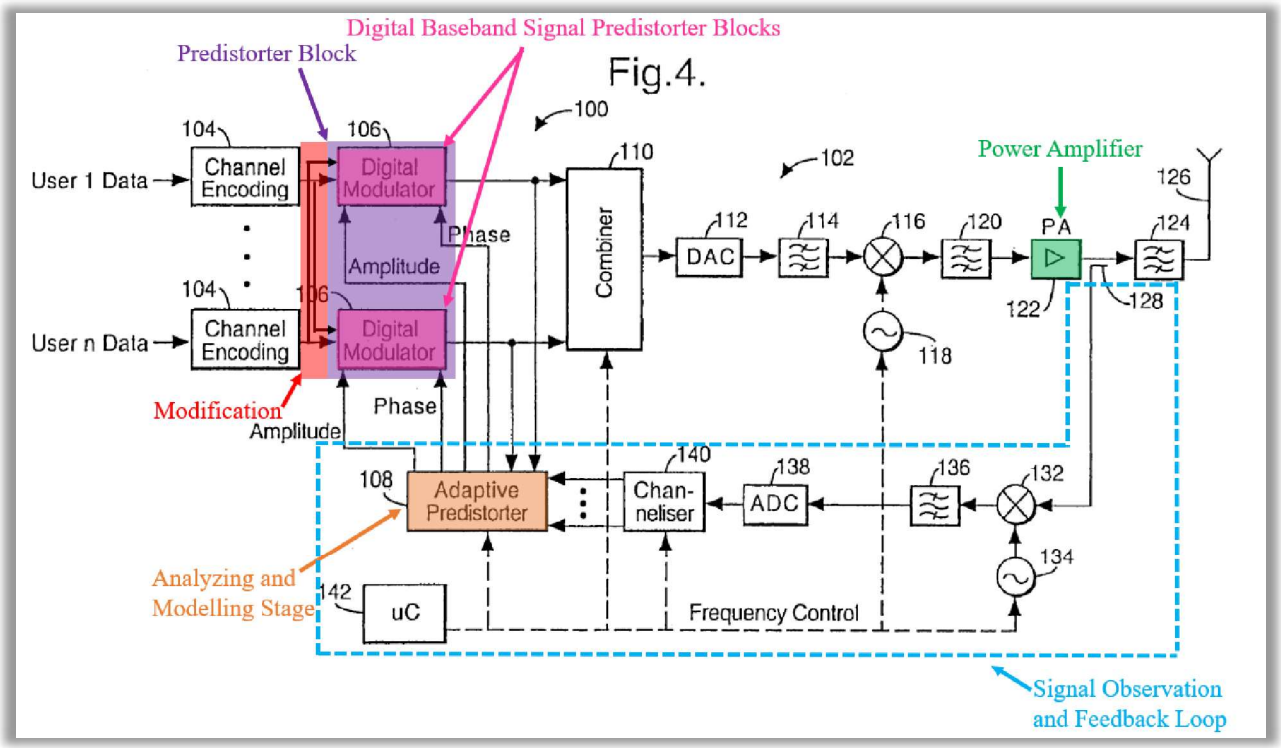

EX-1009, Fig. 4 (Annotated and Modified).

Claim 2 is therefore rendered obvious by Posti based on its express motivation to minimize frequency distortion from other carriers. EX-1003, ¶167.

<u>Claim 3</u>

[3pre] ***The transmitter of claim 2, wherein said concurrent digital multi-band predistortion block further comprises*:**

[3a] ***a plurality of digital baseband signal predistorter blocks, each baseband signal predistorter block having a plurality of first inputs and a single output, the plurality of first inputs corresponding in number to the multiple bands of the***

multi-band transmitter and each first input corresponding to a single frequency channel and wherein

See claim 2 as language is identical.

[3b] ***the signal observation feedback loop includes an analyzing and modeling stage directly connected to each of the plurality of outputs of said digital multi-band predistortion block for receiving the respective predistorted signals and for using said received predistorted signals in controlling said digital multi-band predistortion block.***

Posti's adaptive predistorter 108 (orange) is the claimed *analyzing and modeling stage*, which is connected to the outputs of digital modulators 106 (*digital multi-band predistortion block*) and receives Posti's *predistorted signals for controlling said digital multi-band predistortion block*. EX-1009, 5:11-12 ("output of each of the digital modulators 106 are input … to the adaptive predistorter 108"); EX-1003, ¶169.

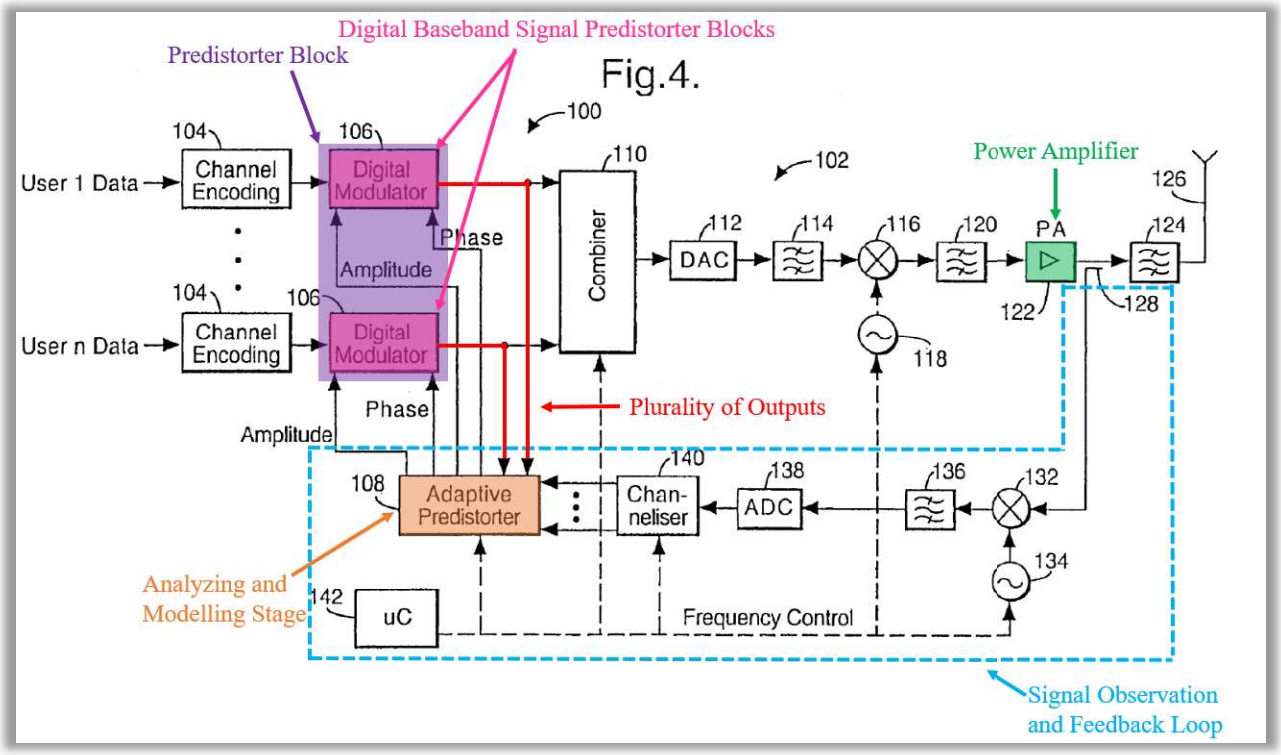

EX-1009, Fig. 4 (Annotated).

Posti explains that its adaptation algorithm 204 calculates the amplitude and phase coefficients to "compensate for non-linearity with respect to amplitude and also phase distortion." EX-1009, 6:49-51; *see also id.*, 4:51-60, 6:40-56. The new amplitude and phase coefficients "are output to a look-up table 200 where they are stored" (EX-1009, 7:21-26), and then "supplied … to the respective digital modulators 106 (*id.*, 7:26-28). Accordingly, Posti's adaptive predistorter 108 (*analyzing and modeling stage*) is connected to the outputs of digital modulators 106 (*digital multi-band predistortion block*) for use in applying new amplitude and phase

coefficients for *controlling said digital multi-band predistortion block.* EX-1003, ¶170.

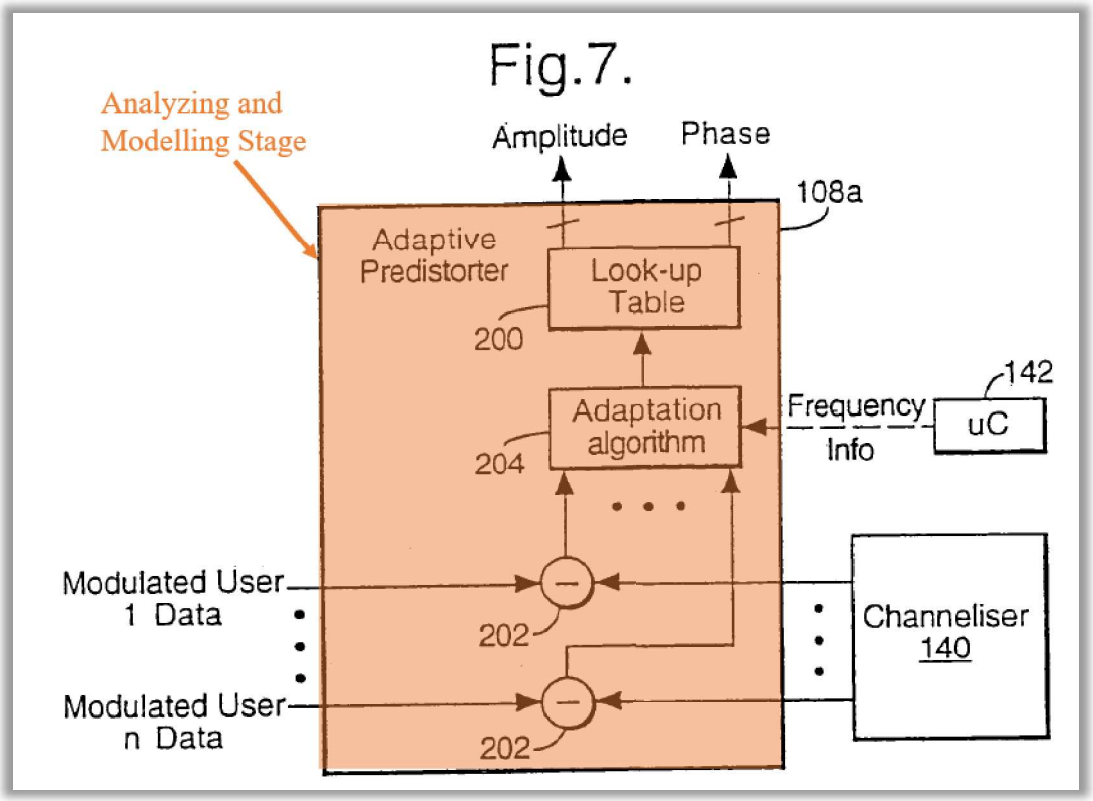

EX-1009, Fig. 7 (Annotated).

<u>Claim 4</u>

[4pre] ***The transmitter of claim 3, wherein said analyzing and modeling stage further comprises*:**

[4a] ***a plurality of outputs connected to and for updating the parameters of said digital baseband signal predistorter block*;**

Posti uses adaptive algorithm block 204 within adaptive predistorter 108 (*analyzing and modeling stage* (orange)) to calculate, and store, new amplitude and phase coefficients, and provide those updated predistortion coefficients to each

respective digital modulator. *See, e.g.,* EX-1009, 4:51-60, 6:40-56, 7:20-28. "Each digital modulator 106 [] receives two outputs from the adaptive predistorter 108" (pink) via direct path for the amplitude and phase coefficients. EX-1009, 4:49-51. Thus, Posti's analyzing and modeling stage has *a plurality of outputs connected to and for updating the parameters of said digital baseband signal predistorter block*. EX-1003, ¶¶171-172.

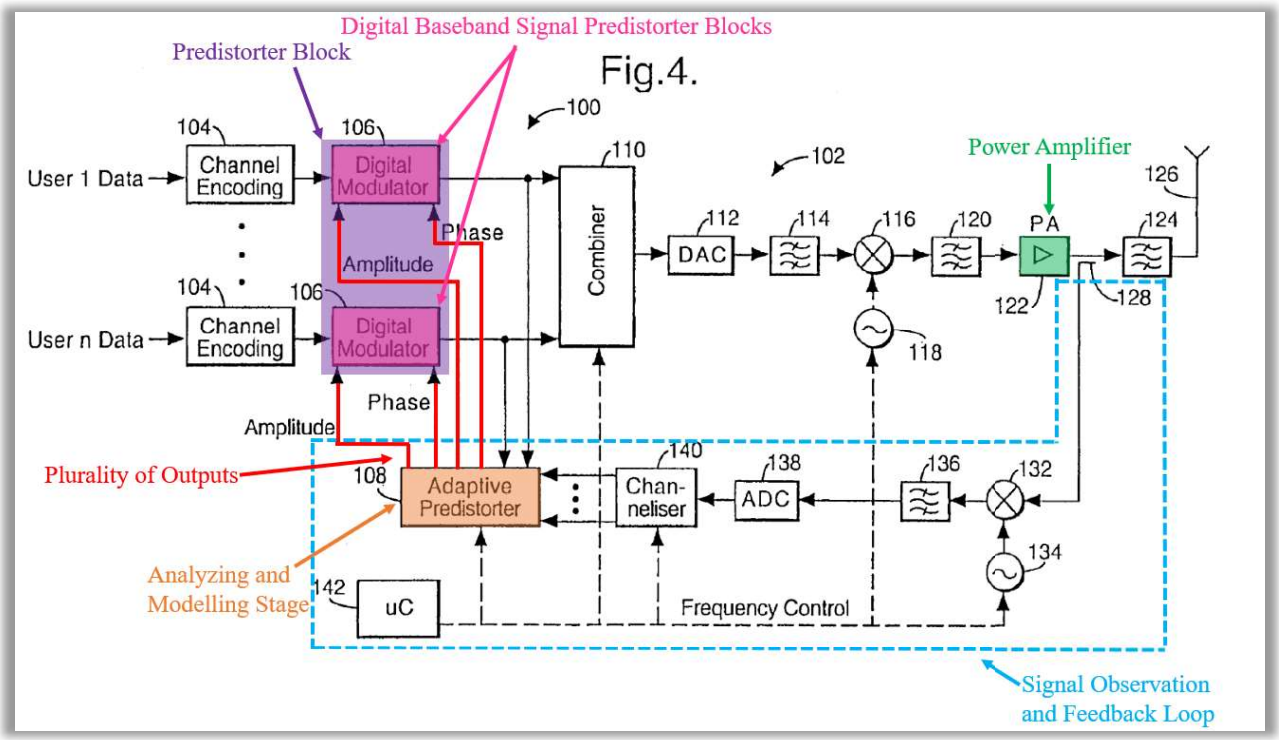

EX-1009, Fig. 4 (Annotated).

[4b] ***a plurality of inputs connected to said outputs of said signal observation feedback loop.***

Notwithstanding any ambiguities between claims 3 and 4 (as previously explained), limitation [4b] requires the analyzing and modeling stage to have a

plurality of inputs from the post-PA feedback path, which is disclosed by Posti. Posti's adaptive predistorter 108 (*analyzing and modeling stage*) receives a plurality of inputs signals output from the channeliser 140. *See, e.g.,* EX-1009, 5:11-12, 6:13-28; EX-1003, ¶173.

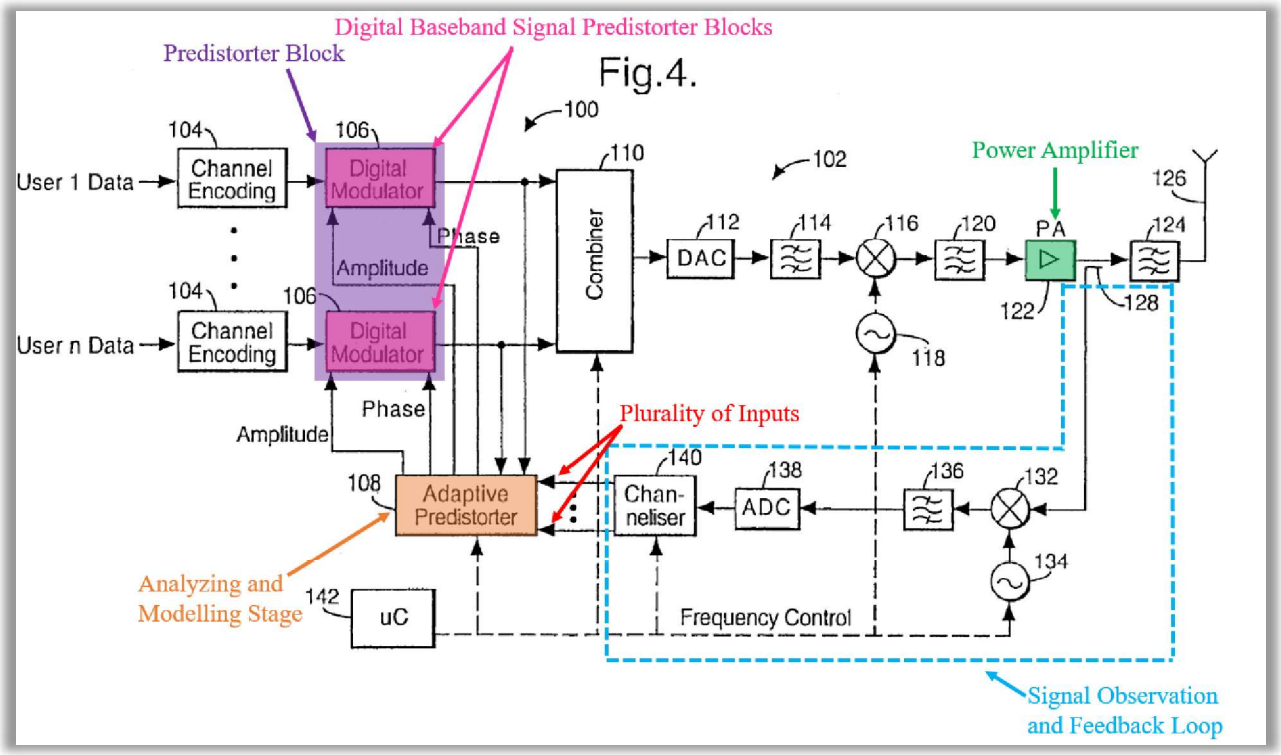

EX-1009, Fig. 4 (Annotated).

Claim 5

[5pre] ***The transmitter of claim 3, wherein said analyzing and modeling stage is further configured to*:**

[5a] ***perform time alignment of complex baseband[5] signals from sampling said outputs of said power amplifier; and***

Posti's adaptive predistorter 108 (*analyzing and modeling stage*) includes "n" subtractors 202 "each of which receives a respective one of the outputs from the digital modulators 106 [and each] subtracter also receives a input from the channeliser 140." EX-1009, 7:12-16. The subtractors create a composite signal that is supplied to adaptation algorithm 204 for calculation of amplitude and phase coefficients (EX-1009, 6:31-40), and all of this is coordinated timewise so that the adaptive predistorter 108 is comparing "like versions of the same signal" (EX-1009, 6:29-31; EX-1003, ¶174).

Posti's comparison of "like versions of the same signal" (EX-109, 6:29-31) means that Posti's adaptive predistorter performs *time alignment of the signals from sampling said outputs of said power amplifier* (EX-1003, ¶¶174-176). To implement this, Posti explains that the channelizer is "provided in any suitable way" (EX-1009, 6:21-22), and a POSA understood that one well-understood and routine way to implement time alignment is to insert a delay block after the channeliser 140 to time

[5] Posti's use of complex baseband signals is addressed in element 5[b].

align the signals (EX-1003, ¶175). To the extent Patent Owner asserts that Posti does not expressly state that Posti's analyzing and modeling stage is configured to perform time alignment, a POSA would have understood and been motivated in view of Posti's instruction to compare "like versions of the same signal" (EX-1009, 6:29-31) to implement the teachings of Posti with a delay block after channeliser 140 to ensure that the composite signal supplied to adaptation algorithm 204 is, in fact, time aligned (EX-1003, ¶176).

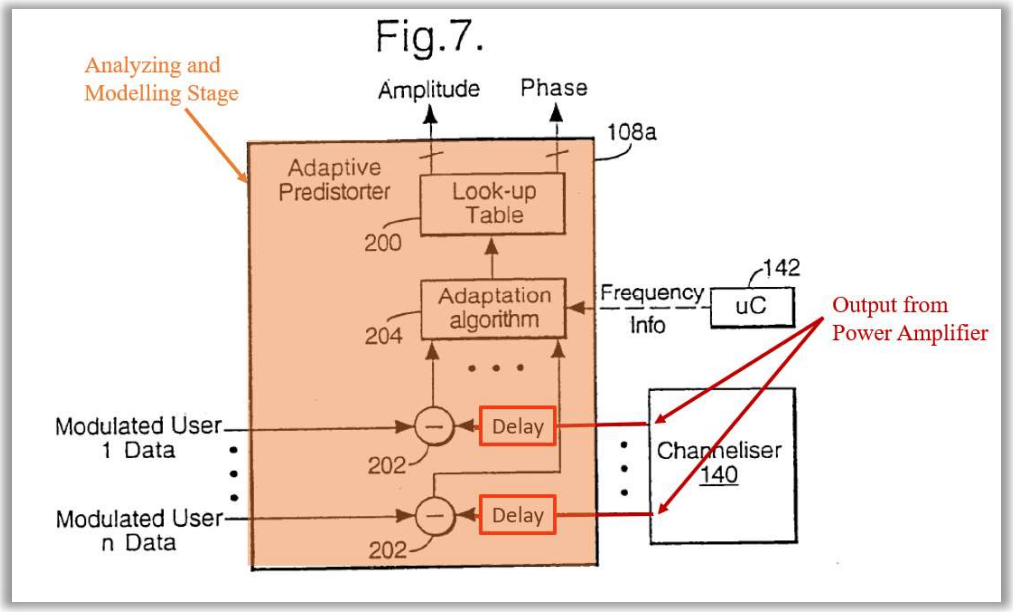

EX-1009, Figure 7 (Annotated and Modified to show Delay Blocks).

[5b] ***perform the reconstruction of the complex baseband signals from sampling said outputs of said power amplifier.***

Because the output of Posti's PA 122 is an analog signal at an RF frequency, a POSA would have understood that this signal would be digitized and down-converted to an intermediate frequency, or baseband, before use in modeling (*i.e.,*

reconstruction of the signal from sampling said outputs of said power amplifier). EX-1003, ¶¶177-180. To do this, Posti discloses a feedback path from coupler 128 including mixer 132, band pass filter 136, ADC 138, and channeliser 140. EX-1009, 5:57-6:17. The signals output from the channeliser 140 correspond to the frequencies of transmission and have both I and Q components. EX-1009, 6:12-20 (channelizer 140 "provides N outputs, one for each of the frequencies [on which the signals were transmitted]"), 8:34-36 (channelizer 140 provides I and Q components "for each frequency"). By having both I and Q component, the channelizer's output is a "complex" sampled signal. EX-1003, ¶¶177.

And while Posti provides an example where the represented feedback signals are at an intermediate frequency, Posti's teachings are not limited to this. Rather, Posti explains that its "channelizer 140 can be provided ***in any suitable way*** including a bank of digital downconverters and ***fast fourier transform circuitry*** ["FFT"]." EX-1009, 6:20-22 (emphasis added). A POSA understood FFT circuitry in channelizing to be used for down-conversion of intermediate frequency signals to baseband signals and, thus, Posti discloses reconstruction of the first feedback signals to *complex baseband signals*. EX-1003, ¶178.

Further, for Posti's adaptive predistorter 108 to compare like versions of (1) the predistorted signal to (2) the PA's output, a POSA would have understood that the predistorted signals from digital modulators 106 would also need to be provided

to the adaptive predistorter 108 at baseband (so a predistorted baseband signal is being compared to a baseband signal from the post-PA feedback path). This too is addressed by Posti. Namely, Posti explains that frequency upconversion (from baseband) is not limited to digital modulators 106, but that the combiner 110 may instead perform upconversion using an inverse fast Fourier transform ("IFFT"). EX-1009, 7:4-6 ("The combiner 110 requires information on the frequency if an inverse fast fourier transform combining technique is required."). In this scenario where upconversion from baseband is done in combiner 110, the predistorted signal output from the digital modulators 106 is output at baseband and provided to both the adaptive predistorter 108 and combiner 110. EX-1003, ¶179.[6]

[6] Further confirming this operation, Posti explains that "[t]he algorithm performed by the adaptive predistorter 108 may also, as discussed hereinbefore utilize frequency information when calculating the predistortion coefficients." EX-1009, 7:4-9. A POSA understood that when working with complex baseband signals, such frequency information is needed to associate the predistorted and feedback (complex baseband) signals to each other in determining the predistortion coefficients on a per-channel basis. EX-1003, ¶180.

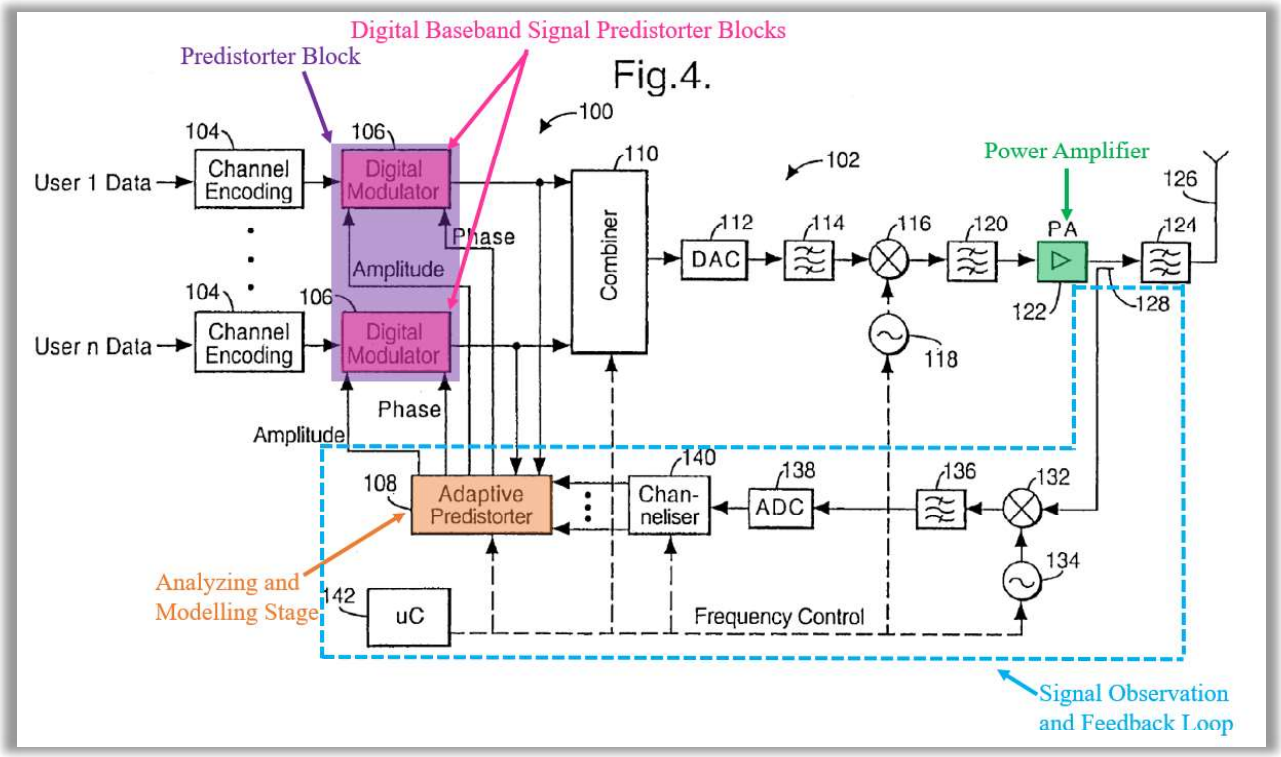

EX-1009, Fig. 4 (Annotated).

<u>Claim 6</u>

[6pre] ***The transmitter of claim 2, wherein said signal observation feedback loop further is further configured to*:**

[6a] ***down-convert samples of the RF signals at said output of the power amplifier; and***

Posti post-PA feedback path includes mixer 132, band pass filter 136, ADC 138, and channeliser 140. EX-1009, 5:50-6:17. The mixer 132 down-converts to an intermediate frequency and ADC 138 digitizes the signal. The channeliser 140—configurable as a bank of digital downconverters—then supplies a signal for each channel to the adaptive predistorter 108 (*down-convert samples of the RF signals at said output of the power amplifier*). EX-1009, 6:16-22; EX-1003, ¶181.

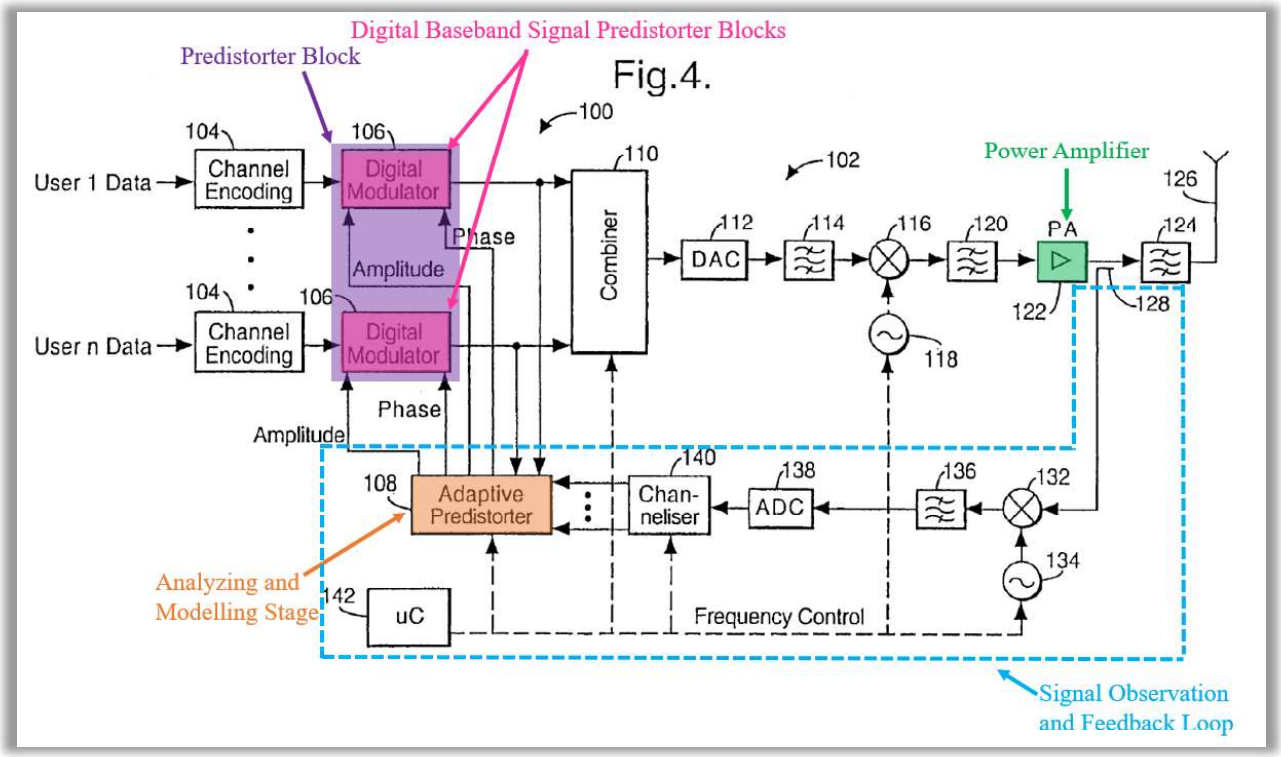

EX-1009, Fig. 4 (Annotated).

[6b] ***extract from said down-converted samples a baseband equivalent for all frequency channels*.**

Posti's channeliser 140, which is provided as "a bank of digital downconverters," "provides N outputs, one for each of the frequencies" (EX-1009, 6:16-22), which corresponds to a signal for all frequency channels (EX-1003, ¶182). And as previously explained, Posti contemplates the use of both intermediate frequency signals and baseband signals (or "a baseband equivalent" as recited in 6[b]). *See* limitation 5[b]; EX-1009, 4:66-5:5, 6:20-22, 7:4-6; EX-1003, ¶182. Thus, Posti discloses a signal observation and feedback loop configured *to extract from down-*

converted samples a baseband equivalent for all frequency channels. EX-1003, ¶183.

Claim 7

[7] *The transmitter of claim 2, wherein said signal observation feedback loop further comprises for each channel*

[7a] *an RF filter; a signal down conversion block; and an analog-to-digital converter (ADC).*

Posti's adaptive predistorter 108 receives signals output from the channelizer 140 (EX-1009, 5:11-12, 6:19-20), which "provides N outputs, one for each of the frequencies" (*id.*, 6:16-18). As each channel is on a different frequency (*id*., 4:43-45), Posti's signal observation feedback loop therefore also comprises a plurality of channels (EX-1003, ¶¶184-186).

Specifically, Posti's feedback signals forming the signal observation and feedback loop pass from coupler 128 to mixer 132 (*i.e*, *signal down conversion block)* (EX-1009, 5:50-60), the mixer 132 passes the signals to a band pass filter 136 (*i.e.*, *an RF filter*) (*id.*, 6:5-8), and then the output of band pass filter 136 is provided to ADC 138 (i.e., *analog to digital converter*) (*id.*, 6:8-11). Accordingly, the components recited in limitation [7a] are expressly included in Posti's feedback loop and process the signal *for each channel*. EX-1003, ¶185.

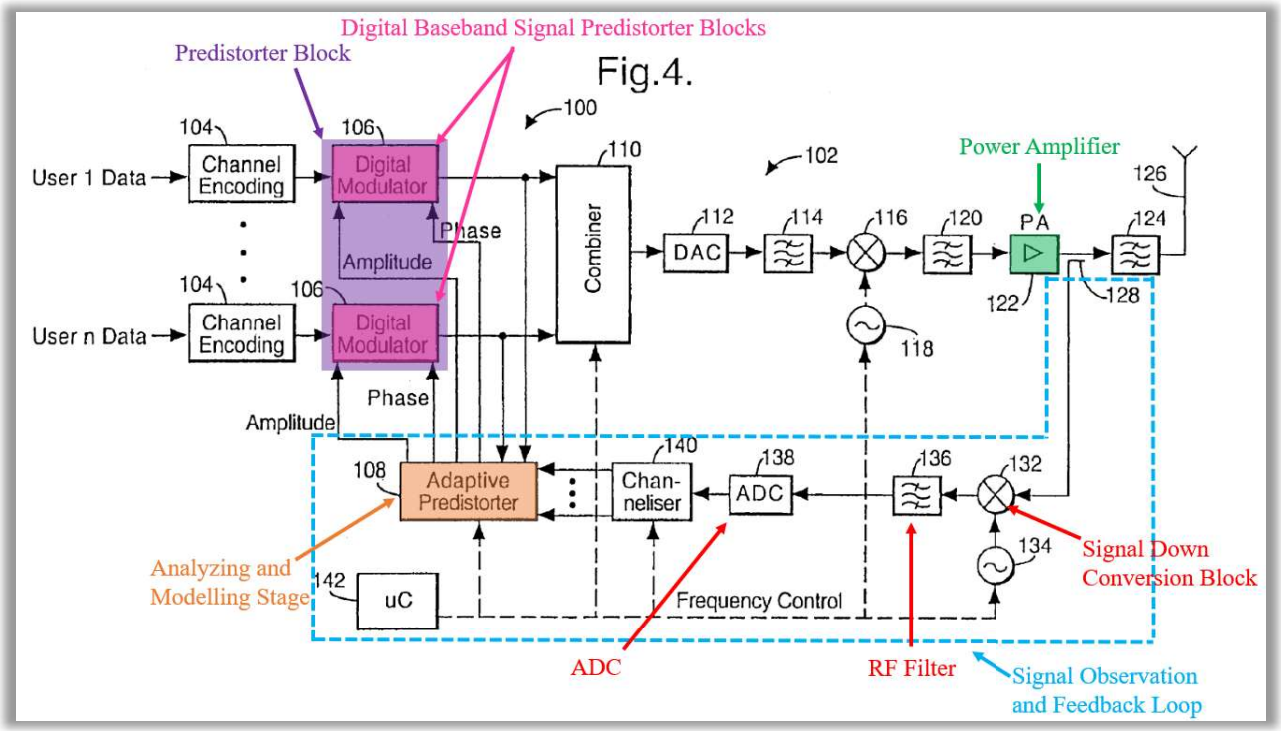

EX-1009, Fig. 4 (Annotated).

To the extent Patent Owner argues that Claim 7 requires multiple parallel feedback paths for each plurality of channels, this would have been well within the understanding of a POSA and a trivial implementation detail. EX-1003, ¶186. A POSA understood that to do so, all that would be required is to replace Posti's channelizer with parallel versions of the already disclosed feedback path including mixer 132 (*i.e*, *signal down conversion block*) (EX-1009, 5:58-60), band pass filter 136 (*i.e.*, *an RF filter*) (*id.*, 6:5-8), and ADC 138 (i.e., *analog to digital converter*) (*id.*, 6:8-11). This implementation would provide an individual feedback path for each channel, and the mixer 132 would advantageously be used to convert each

channel directly down to baseband in its respective signal path. A POSA would have been motivated to apply this implementation detail and option to reduce the number of down-conversion stages and to obviate the need for channelizer 140. EX-1003, ¶186.

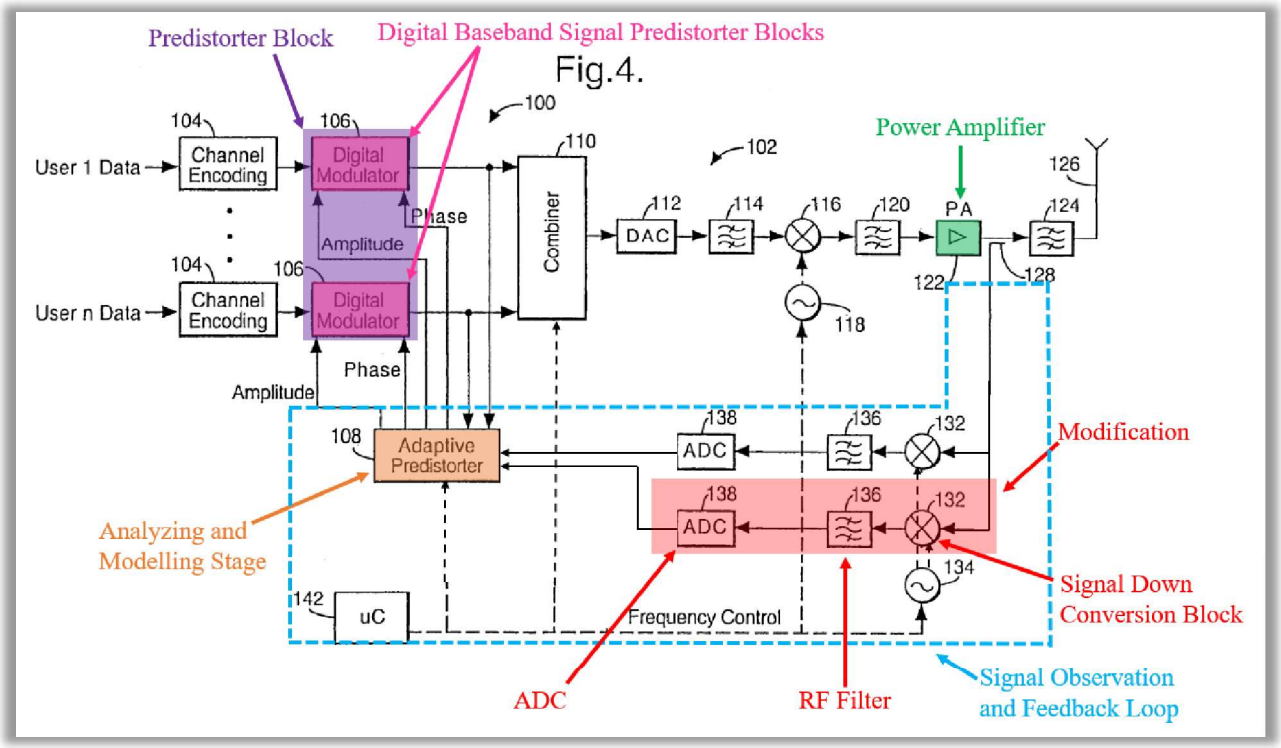

EX-1009, Fig. 4 (Annotated and Modified).

Claim 8

[8pre] ***The transmitter of claim 2, wherein said signal observation feedback loop further comprises*:**

[8a] ***a single subsampling-based receiver to down-convert samples output from a concurrent multi-band transmitter*.**

As discussed above in sections VII.B.2, it would have been obvious to implement Posti using a subsampling-based feedback loop, including the use of *a*

single subsampling-based receiver, as claimed (and as disclosed in Cidronali). Cidronali's subsampling receiver "allows [for] extreme flexibility and coherent dual-band down-conversion" (EX-1006, 000001), thus cost-effectively down-converting RF samples from Posti's PA. EX-1003, ¶187.

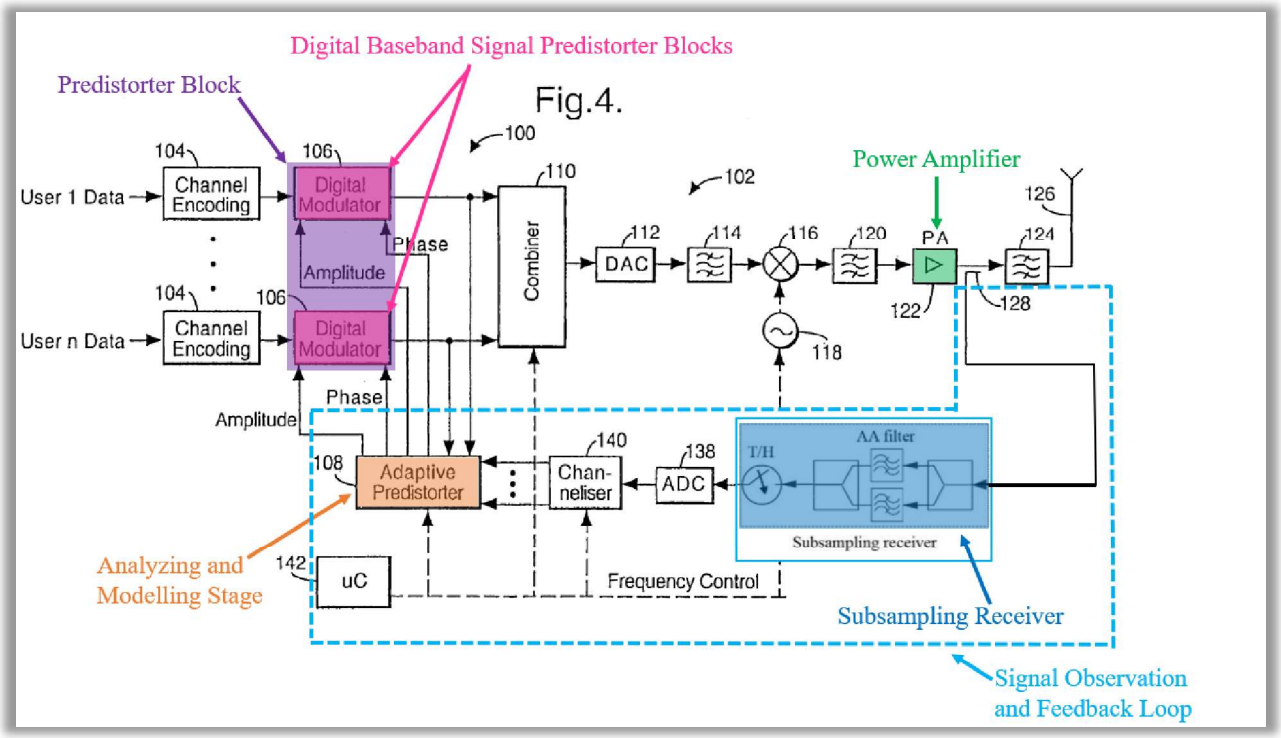

EX-1009, Fig. 4 (Annotated and Modified in View of EX-1006, Fig. 4).

<u>Claim 9</u>

[9pre] ***The transmitter of claim 8, wherein said single subsampling-based receiver further comprises*:**

[9a] ***an RF filter; a track and hold (T&H) block; and an analog-to-digital converter (ADC).***

Cidronali's single subsampling-based receiver uses an anti-aliasing/AA filter (*RF filter*), T/H component (*track and hold (T&H) block*), and ADC (*an analog-to-*

digital converter) (EX-1006, Fig. 4). These commonplace components are further illustrated in the annotated figure below, which a POSA would have immediately understood as corresponding to the claimed components. EX-1003, ¶188.

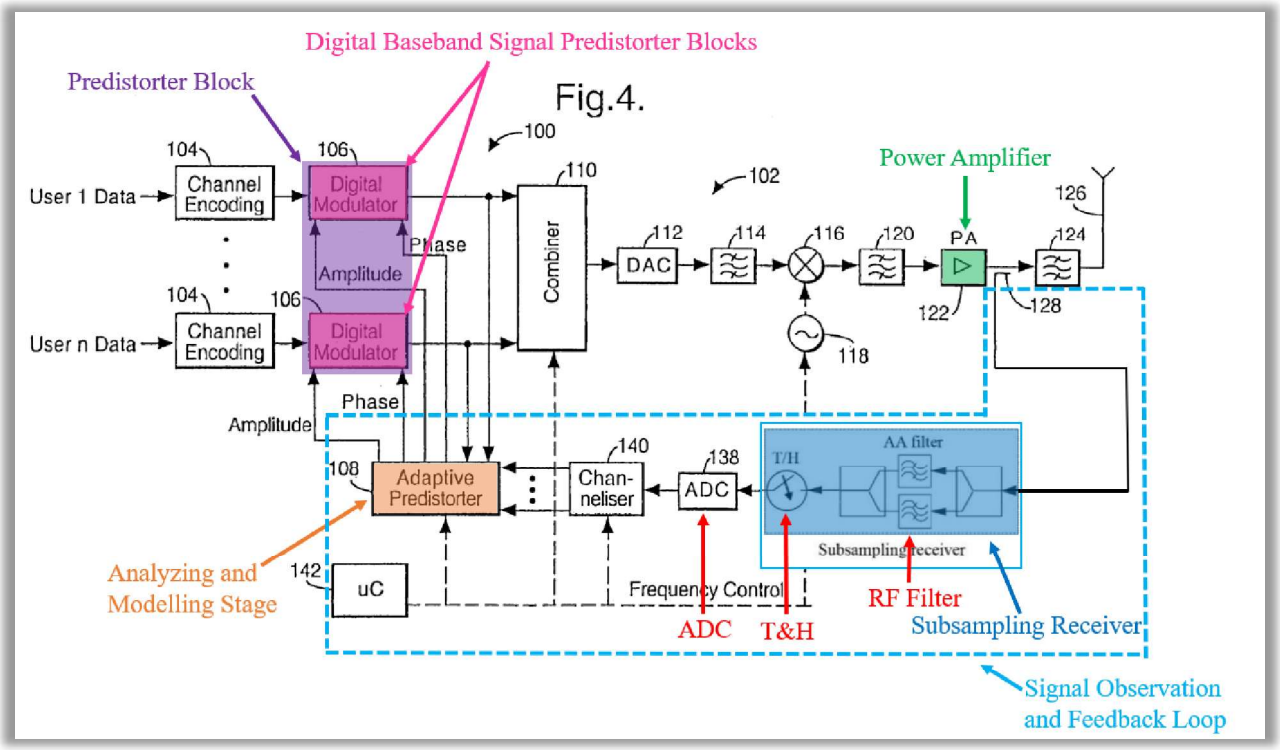

EX-1009, Fig. 4 (Annotated and Modified in View of EX-1006, Fig. 4).

<u>Claim 10</u>

[10] ***The transmitter of claim 1, wherein the subsampling frequency is greater than two times a signal bandwidth of the modulated concurrent multi-band signals.***

Posti in view of Cidronali discloses this limitation for the same reasons as discussed in Ground 1.

Claim 11

[11] ***The transmitter of clam 1, wherein the subsampling frequency f_s is in a range $2fu/n \leqq f_s \leqq 2h/(n-1)$ where $1 \leqq n \leqq |fu/B|$, and where B is a bandwidth of the amplified concurrent multi-band signals, and f_L f_u, are respective lower and upper frequencies of the bandwidth, and n is an integer*.**

Posti in view of Cidronali discloses this limitation for the same reasons as discussed in Ground 1.

Claim 12

[12pre] ***A method at transmitter comprising*:**

See limitation [1pre].

[12a] ***amplifying a modulated concurrent multi-hand signal to provide an amplified concurrent multi-band signal*;**

See limitation [1a].

[12b] ***predistorting the modulated concurrent multi-hand signal to compensate for a non-linearity of the power amplifier*:**

See limitation [1b].

[12c] ***subsampling of the amplified concurrent multi-band signals at a subsampling frequency lower than twice a highest signal frequency in the amplified multi-band signal: and***

See limitation [1c].

[12d] ***controlling the predistorting by the subsampled concurrent multi-band signal.***

See limitations [1b] and [3b].

Claim 13

[13] ***The method of claim 12, wherein the subsampling frequency is greater than two times a signal bandwidth of the modulated concurrent multi-band signal.***

See Ground 1, Claim 10.

Claim 14

[14] ***The method of claim 12, wherein the subsampling frequency is chosen to avoiding aliasing between replicas.***

Posti in view of Cidronali discloses this claim for the same reasons as discussed in Ground 1, Claim 14.

Claim 15

[15] ***The method of claim 14, wherein the chosen subsampling frequency fs for a given signal bandwidth and carrier frequency fc is in the range*** $2fu/n \leqq f_s \leqq 2h/(n-1)$ ***where*** $1 \leqq n \leqq |fu/B|$ ***and where B is a bandwidth of the amplified concurrent multi band signal, and*** f_L, f_u ***are respective lower and upper frequencies of the bandwidth, and n is an integer.***

See Ground 1, Claim 11.

VIII. THE BOARD SHOULD NOT EXERCISE ITS DISCRETION TO DENY INSTITUTION

A. The Board Should Not Deny Review Under 35 U.S.C. § 325(d)

None of the references relied upon herein were cited, discussed or applied in the ’204 Patent’s prosecution history, nor are the references the same or substantially the same as those considered during prosecution. (*See* Ex. 1002, 98, 163, 208.) Accordingly, the Board should not exercise its discretion under Section 325(d).

B. The Board Should Not Deny Review Under 35 U.S.C. § 314(a)

Under *Fintiv*, the Board takes a holistic view of whether efficiency, fairness, and the merits support the exercise of authority to deny institution in view of an earlier trial date in a parallel proceeding. *Apple Inc. v. Fintiv, Inc.*, Case IPR2020-00019, Paper 11 at 6 (March 20, 2020). As the Challenged Claims have never been tested against the most relevant prior art, the Board should not exercise that discretion here.

Factor 1 is neutral because no request for stay has been filed.

Factor 2 is neutral. A scheduling order sets trial for November 17, 2025. EX-1017. However, according to the most recent statistics on median time-to-trial for civil actions, the median time to trial in the Eastern District of Texas is 21.6 months, which would push the trial date to around January 2026 (Ex. 1018, 35). Further, Smart RF filed three separate cases (now consolidated for discovery), asserting five patents with a total of 73 claims. The cases also involve multiple intervenors. These facts make it unlikely for the cases to proceed according to the Court's initial schedule. But even if jury selection were to proceed on November 17, 2025, the trial would decide only one of the three cases. Each of the defendant Petitioners are entitled to separate trials, which will necessarily proceed on separate dates to be set by the court at a later time and likely spreading well into 2026. As such, there are explicit and inherent uncertainties for this case given the number of parties involved

and the number of trials regarding this patent. And at minimum, because much can change in eight months, the current trial date does not support denial. *See Dish Network v. Broadband iTV*, IPR2020-01280, Paper 17 at 16 (PTAB Feb. 4, 2021).

Factor 3 weighs against discretionary denial. The district court has not issued any substantive rulings in any case with respect to the ’204 patent, and the claim construction hearing is not scheduled until May 30, 2025, at the earliest. Further, the Court will not consider motions for summary judgment until after the likely September 2025 deadline for an institution decision in this case. *See* Ex. 1017, 5, 6.

Factor 4 weighs against discretionary denial. Petitioners stipulate that if the IPR is instituted, Petitioners will not pursue in the Related Litigation any ground raised or that reasonably could have been raised in this Petition. *Sotera Wireless, Inc. v. Masimo Corp.*, IPR2020-01019, Paper 12 at 13-20 (Dec. 1, 2020); EX-1022.

Under **Factor 5**, Petitioners are defendants (or intervenors) in the Related Litigation, which might weigh in favor of discretionary denial; however, factors 1, 2, and 5, collectively, are neutral. *See HP Inc. v. Slingshot Printing LLC*, IPR2020-01084, Paper 13 at 9 (Jan. 14, 2021).

Assessing *Fintiv* factors 1-5, the Board should find that discretionary denial is not supported. Nevertheless, if the Board reaches the compelling merits question, the merits of the Petition are particularly strong.

Under **Factor 6**, and as described in Grounds 1-2, the merits of the Petition are particularly strong and compelling. For example, the prior art relied upon herein unquestionably establishes the admittedly well-known use of *a subsampling frequency lower than twice a highest signal frequency in the amplified concurrent multi-band signals* that was added during prosecution and that caused the examiner to withdraw his rejection. The evidence presented, if unrebutted in trial, would plainly lead to a conclusion that one or more claims are unpatentable by a preponderance of the evidence.

When viewed holistically, the timing of the present Petition is reasonable and the efficiency, fairness, and the compelling merits support instituting review.

IX. MANDATORY NOTICES – 37 C.F.R. § 42.8

A. Real Parties-In-Interest Under 37 C.F.R. § 42.8(b)(1)

Petitioners T-Mobile, AT&T, Verizon, Ericsson and Nokia are real parties-in-interest ("RPIs"). In an abundance of caution, only for purposes of this proceeding, and only to the extent that Patent Owner contends that they should be named an RPI, Petitioners also identify the following entities as potential RPIs without conceding that they would satisfy the factually intensive RPI test: Sprint LLC, Sprint Solutions LLC, Sprint Spectrum LLC, T-Mobile USA, Inc., AT&T Services, Inc., AT&T

Enterprises LLC[7], Verizon Corporate Services Group Inc. and Telefonaktiebolaget LM Ericsson. In addition, some of the entities listed above out of an abundance of caution are holding companies that are legally and factually distinct from their subsidiaries (that may also be listed above and which maintain their own independent corporate status, identity, and structure) and have not provided any products or services that might be at issue in the underlying patent infringement lawsuit.

B. Related Matters Under 37 C.F.R. § 42.8(b)(2)

To Petitioners' knowledge, the '204 Patent is involved in the following cases, which have been consolidated:

Style	Number	Tribunal	Filed
Smart RF Inc. v. AT&T Mobility LLC	2:24-cv-00195	EDTX	March 19, 2024
Smart RF Inc. v. Cellco Partnership d/b/a Verizon Wireless	2:24-cv-00196	EDTX	March 19, 2024
Smart RF Inc. v. T-Mobile US, Inc. et al	2:24-cv-00197	EDTX	March 19, 2024

[7] Related-Matter Defendant AT&T Corp. has undergone a corporate transaction and is now merged and converted into AT&T Enterprises, LLC.

C. Lead and Back-Up Counsel Under 37 C.F.R. § 42.8(b)(3)

Lead Counsel	Back-Up Counsel
Christopher Ricciuti Reg. No. 65,549 CRicciuti@duanemorris.com DUANE MORRIS LLP 901 New York Avenue NW Suite 700 East Washington, D.C. 20001 T: (202) 776-7832	Glenn Richeson Reg. No. 73,480 GDRicheson@duanemorris.com DUANE MORRIS LLP 1075 Peachtree Street NE Suite 1700 Atlanta, GA 30309 T: (404) 253-6998 Matthew S. Yungwirth (*pro hac vice* motion forthcoming) msyungwirth@duanemorris.com DUANE MORRIS LLP 1075 Peachtree Street NE Suite 1700 Atlanta, GA 30309 T: (404) 253-6935

D. Service Information Under 37 C.F.R. § 42.8(b)(4)

Service via hand-delivery may be made at the postal mailing address of either lead or back-up counsel. Petitioner consents to service by e-mail.

E. Payment of Fees – 37 C.F.R. § 42.103

The required fee is being paid using the Patent Review Processing System.

X. CONCLUSION

Petitioners respectfully request IPR institution and cancellation of Claims 1-15.

Respectfully submitted,

Dated: March 18, 2025

/Christopher Ricciuti/
Christopher Ricciuti
USPTO Reg. No. 65,549

XI. CERTIFICATE OF WORD COUNT

Pursuant to 37 C.F.R. § 42.24, Petitioner hereby certifies, in accordance with and in reliance on the word count provided by the word-processing system used to prepare this Petition, that the number of words in this Petition is 13,653. Pursuant to 37 C.F.R. § 42.24(d), this word count excludes the table of contents, table of authorities, mandatory notices under § 42.8, certificate of service, certificate of word count, appendix of exhibits, and any claim listing.

Dated: March 18, 2025

/Christopher Ricciuti/
Christopher Ricciuti
USPTO Reg. No. 65,549

CERTIFICATION OF SERVICE ON PATENT OWNER

Pursuant to 37 C.F.R. §§42.6(e), 42.8(b)(4) and 42.105, the undersigned certifies that on March 18, 2025, a complete and entire copy of this Petition for *Inter Partes* Review of U.S. Patent 9,641,204 and all supporting exhibits and other documents (including Petitioners' Power of Attorneys) were served via Federal Express, postage prepaid, to the correspondence address of record for the '204 Patent, as well as on Smart RF's litigation counsel via Federal Express and email:

Date of service	March 18, 2025
Manner of service	FEDERAL EXPRESS
Documents served	Petition for *Inter Partes* Review Under 35 U.S.C. § 312 and 37 C.F.R. § 42.104 of U.S. 9,641,204; Petitioner's Exhibit List; All Exhibits; Petitioner's Power of Attorney.
Persons served	Kevin Pillay (correspondence address of record) NUA-IP 503-85 Range Road Ottawa, ONTARIO K1N 8J6 Canada Patrick J. Conroy Texas Bar No. 24012448 Ryan P. Griffin Texas Bar No. 24053687 Jonathan H. Rastegar Texas Bar No. 24064043 Nathan L. Levenson Texas Bar No. 24097992 NELSON BUMGARDNER CONROY PC 2727 N. Harwood St., Suite 250 Dallas, TX 75201 pat@nelbum.com

ryan@nelbum.com
jon@nelbum.com
nathan@nelbum.com

/Christopher Ricciuti/
Christopher Ricciuti
USPTO Reg. No. 65,549