CONTAINS RESTRICTED – ATTORNEYS EYES' ONLY MATERIAL AT §§ 8.4, 9.4, 10.4, 12.2 AND 13.2

IN THE UNITED STATES DISTRICT COURT
FOR THE EASTERN DISTRICT OF TEXAS
MARSHALL DIVISION

SMART RF INC., Plaintiff, vs. AT&T MOBILITY LLC, Defendant.	§ § § § § § § § §	Case No. 2:24-cv-00195-JRG (Lead Case) **JURY TRIAL DEMANDED**
SMART RF INC., Plaintiff, vs. CELLCO PARTNERSHIP D/B/A VERIZON WIRELESS, Defendant.	§ § § § § § § § §	Case No. 2:24-cv-00196-JRG (Member Case) **JURY TRIAL DEMANDED**
SMART RF INC., Plaintiff, vs. T-MOBILE US, INC., T-MOBILE USA, INC., SPRINT LLC, SPRINT SOLUTIONS LLC, AND SPRINT SPECTRUM LLC, Defendants.	§ § § § § § § § § § §	Case No. 2:24-cv-00197-JRG (Member Case) **JURY TRIAL DEMANDED**

Report of James Proctor Regarding Invalidity of the Patents-in-Suit

James Proctor, Jr.
Dated: July 8, 2025

[redacted]

4. SUMMARY OF OPINIONS & MATERIALS CONSIDERED

17. I have been asked to provide opinions related to the validity of the Patents-in-Suit. As explained below, it is my opinion that the asserted claims of the Patents-in-Suit are invalid as anticipated and/or rendered obvious in light of the prior art, for at least the reasons set for in this

report. It is also my opinion that the asserted claims of the Patents-in-Suit are invalid for the other reasons described below. A summary of my opinions is set forth below.

18. As to the '345 Patent, it is my opinion that:

    a. Claims 1, 2, 5, 6, 7, 8, and 11 are invalid as obvious under Wright;

    b. Claims 3, 4, 9, 10 are invalid as obvious under Wright in view of Jin;

    c. Claims 1, 2, 5, 6, and 11 are invalid as obvious under Booth in view of Leyendecker;

    d. Claims 1, 2, 5, 7, 8, and 11 are invalid as obvious under Jeckeln 364 alone or in view of Leyendecker;

    e. Claims 1-11 are invalid as indefinite for lack of written description and enablement;

    f. Claims 1-11 are invalid as directed to patent ineligible subject matter.

19. As to the '561 Patent, it is my opinion that:

    a. Claims 1, 4-7, and 15 are invalid as obvious under Liu;

    b. Claims 3, 11-14, and 19-22 are invalid as obvious under Liu in view of Ding;

    c. Claims 1-22 are invalid as indefinite for lack of written description and enablement;

    d. Claims 1-22 are invalid as directed to patent ineligible subject matter.

20. As to the '857 Patent, it is my opinion that:

    a. Claims 1-15 are invalid as anticipated and/or obvious under Van Zelm;

    b. Claims 1-14 are invalid as anticipated under McCallister in view Smart RF's reading of the '857 Patent for purposes of infringement;

c. Claims 1-14 are invalid as obvious under McCallister in view of Sadri;

d. Claims 1-15 are invalid as indefinite for lack of written description and enablement;

e. Smart RF has not demonstrated it is entitled to the asserted September 2008 priority date for the '857 Patent.

21. As to the '204 Patent, it is my opinion that:

a. Smart RF has not demonstrated it is entitled to the asserted February 2010 priority date for the '204 Patent.

b. Claims 1-15 are invalid as being anticipated and/or rendered obvious by Peroulas alone or in view of Cidronali.

c. Claims 1-15 are invalid as being anticipated and/or rendered obvious by Posti alone or in view of Cidronali.

d. Claims 1-15 are invalid as being anticipated and/or rendered obvious by Bassam.

e. The Asserted Claims are invalid for failure to satisfy the written description requirement.

f. The Asserted Claims are invalid for failure to satisfy the enablement requirement.

g. The Asserted Claims are directed to wholly routine, conventional, and generic DPD ideas and components.

22. As to the '296 Patent, it is my opinion that:

a. Smart RF has not demonstrated it is entitled to the asserted February 2010 priority date for the '296 Patent.

b. Claims 1-10 are invalid as being anticipated and/or rendered obvious by Peroulas alone or in view of Cidronali.

c. Claims 1-10 are invalid as being anticipated and/or rendered obvious by Posti alone or in view of Cidronali.

d. Claims 1-10 are invalid as being anticipated and/or rendered obvious by Bassam.

e. The Asserted Claims are invalid for failure to satisfy the written description requirement.

f. The Asserted Claims are invalid for failure to satisfy the enablement requirement.

g. The Asserted Claims are directed to wholly routine, conventional, and generic DPD ideas and components.

[redacted]

[redacted]

8.3 Overview of the Prior Art

8.3.1 Wright

94. U.S. Patent No. 6,587,514 ("Wright") (*T-Mobile USA, Inc. v. Smart RF Inc.*, IPR 2025-00727, Ex. 1003) issued on July 1, 2003 with a priority claim to a U.S. provisional patent application filed on July 13, 1999. For my purposes of my invalidity analysis, I have considered Wright to be prior art to the '345 Patent.

95. Wright discloses improved systems and methods for digitally predistorting wideband signals. (Wright, Abstract, 1:22-30.) Wright explains that then-existing predistortion systems failed to accurately account for distortion effects based on the past inputs to the PA ("memory effects"), which may be caused by, among other things, fluctuations in the PA's

[5] I understand that claims 4, 6, 9, 11, 13 and 15 referenced during prosecution correspond to independent claims 1, 3, 5, 7, 9, and 11, as issued, respectively.

temperature variations. (*Id*. at 2:9-17.) Wright discloses using a compensation circuit, including a Digital Compensation Signal Processor ("DCSP") and Adaptive Control Processing and Compensation Estimator ("ACPCE"), that indexes the predistorter's LUT based on the input transmission signal, which allows the accuracy of the predistortion model to be increased. (*Id*. at 2:35-3:7.) Wright's predistortion technique could be adapted for both systems having a digital baseband input signal as well as those having an analog RF input signal. (*Id*. at 43:33-39.)

8.3.2 Booth

96. U.S. Patent No. 6,512,417 ("Booth") (*T-Mobile USA, Inc. v. Smart RF Inc.*, IPR 2025-00727, Ex. 1005) issued on January 28, 2003 from a priority U.S. patent application filed May 11, 2001 and claims the benefit of a British patent application filed on May 11, 2000. For my purposes of my invalidity analysis, I have considered Booth to be prior art to the '345 Patent.

97. Booth discloses an improved digital predistortion system for analog RF transmitters. (Booth, Abstract, 2:40-51.) Booth teaches a digital predistortion system that considers both instantaneous distortion effects as well as memory effects to more accurately predistort the signal. (*Id*. at 2:40-62.) Booth explains that the memory effects can be greatly mitigated while adding little additional cost to the PA's arrangement. (*Id*.)

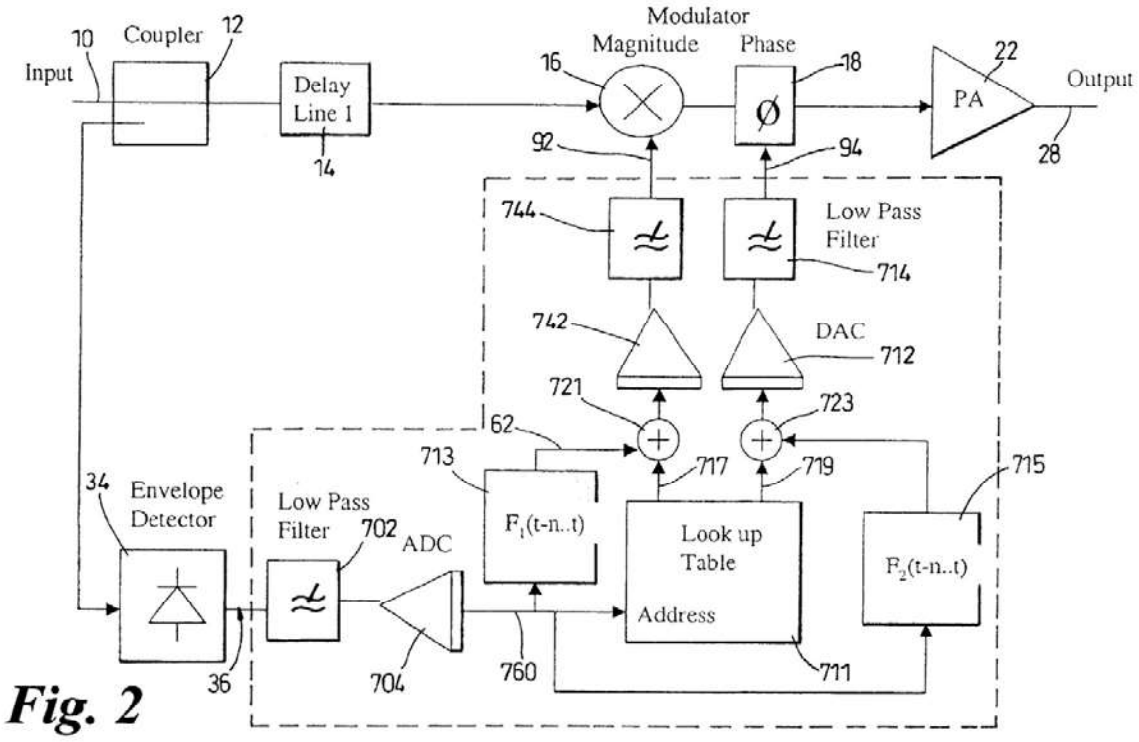

Fig. 2

(Booth, 7:5-32, Fig. 2.)

8.3.3 Leyendecker

98. U.S. Patent No. 5,867,065 ("Leyendecker") (DEF-0002025) issued on February 2, 1999 from a U.S. patent application filed May 7, 1997. For my purposes of my invalidity analysis, I have considered Leyendecker to be prior art to the '345 Patent.

99. Leyendecker discloses an improved predistortion system for wireless transmitters. (Leyendecker, 2:57-60, 2:66-3:5.) Leyendecker recognized that predistorting a signal using only the instantaneous power or magnitude does not completely reflect the distortion caused by an amplifier. (*Id.* at 9:4-18.) Leyendecker teaches a dynamic, "memory effect" model that considers past power or magnitude of PA inputs to more accurately model distortion. (*Id.*)

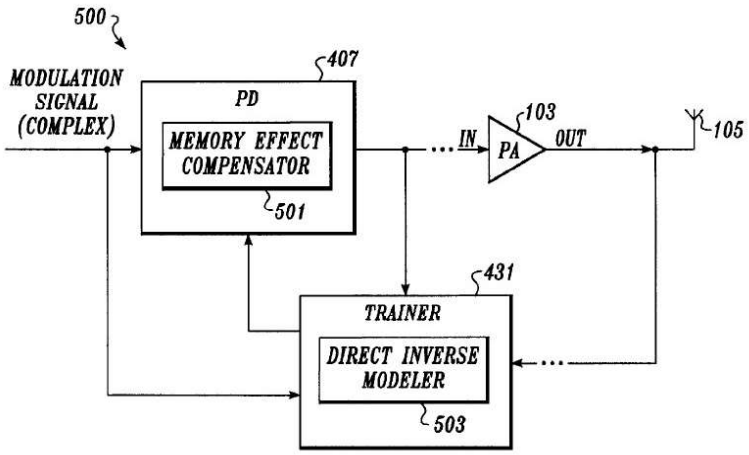

Fig. 5

(*Id.* at Fig. 5.)

100. Leyendecker also teaches using digital receivers to convert signals from analog to digital to aid the digital predistortion. (*Id.* at 6:13-41.) For example, a digital receiver downconverts, digitizes and demodulates the RF signal to digital baseband in order to produce the signal's complex envelope that is used in the predistortion. (*Id.*) Leyendecker also explains that the digital receivers may provide additional digital filtering and/or decimation processes. (*Id.* at 6:66-7:8.)

8.3.4 Jin

101. U.S. Patent No. 6,693,974 ("Jin") (DEF-0002088) issued on February 17, 2004 from a U.S. patent application filed August 5, 1999. For my purposes of my invalidity analysis, I have considered Jin to be prior art to the '345 Patent.

102. Jin discloses an adaptive digital predistorter for use in an RF transmitter. (Jin, 1:19-21.) More specifically, Jin discloses a "pre-distortion adjustment circuit . . . that optimizes the ACP profile of an RF power amplifier to fully use the ACP profile under the applicable RF communication standard." (*Id.* at 2:30-33.)

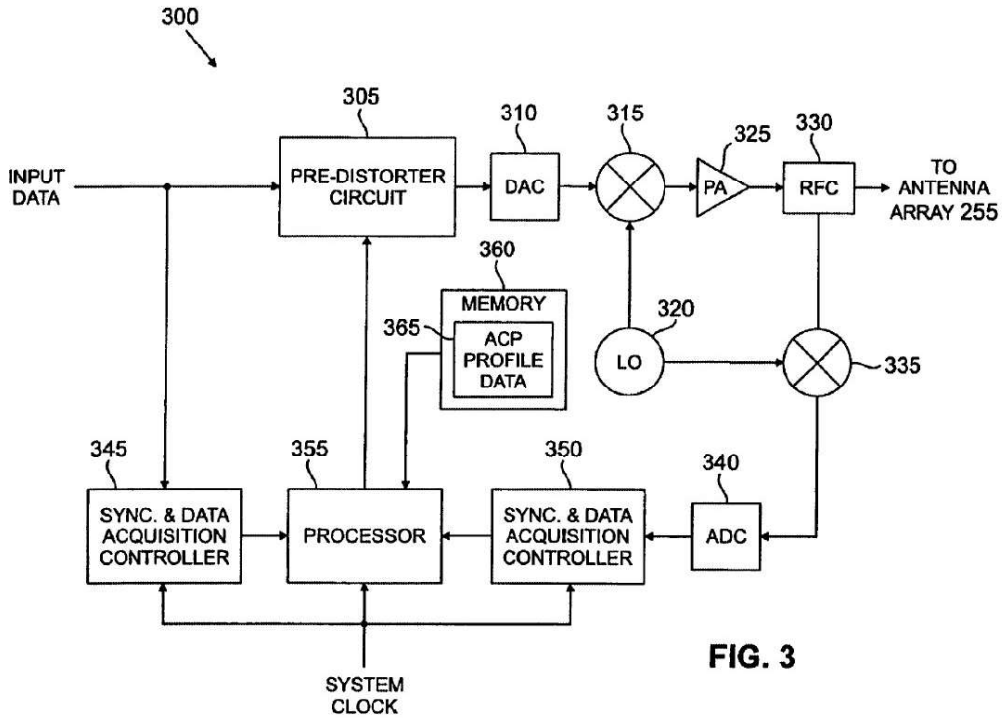

FIG. 3

(*Id*. at Fig. 3.)

103. Jin explains that "[g]enerally speaking, the actual ACP profile of an RF PA is not the same as the ACP profile required by the standard[,]" so "there is a need for RF power controllers that make RF power amplifiers more efficient by utilizing the available ACP noise margins." (*Id*. at 1:62-64, 2:22-25.) To resolve this problem, Jin discloses an ACP minimization sub-step "that samples the RF transmitter input and output signals, and synchronizes and compares the samples to each other and to the ACP profile of an applicable standard." (*Id*. at 6:4-9.)

8.3.5 Jeckeln '364

104. U.S. Patent No. 6,072,364 ("Jeckeln 364") (DEF-0007631) issued on June 6, 2000 from a U.S. patent application filed June 17, 1997. For the purposes of my invalidity analysis, I have considered Jeckeln 364 to be prior art to the '345 Patent.

105. Jeckeln 364 shares three inventors with the '345 Patent (Ernesto Jeckeln, Fadhel Ghannouchi and Mohamad Sawan) and is similarly directed to an adaptive digital predistortion

system and method. (Jecklen 364, (75), Abstract; *see also*, '345 Patent, (75).) More specifically, using nearly identical verbiage, Jeckeln 364 discloses "an adaptive method for predistorting a signal to be transmitted, supplied by a signal source to an input of a power amplifier having an output for delivering an amplified output signal." (Jeckeln 364, 2:66-3:3.) As Jeckeln explains:

> This method comprises the steps of predistorting the signal to be transmitted by means of predistortion look-up table means interposed between the signal source and the input of the power amplifier, producing a first feedback signal in response to the predistorted signal, producing a second feedback signal in response to the amplified output signal from the power amplifier, delaying at least one of the first and second feedback signals for eliminating any time lag between these first and second feedback signals, and updated the predistortion amplitude and phase look-up table means in response to the first and second feedback signals.

(*Id*. at 3:3-14; *cf.* '345 Patent, claim 1.)

FIG.1

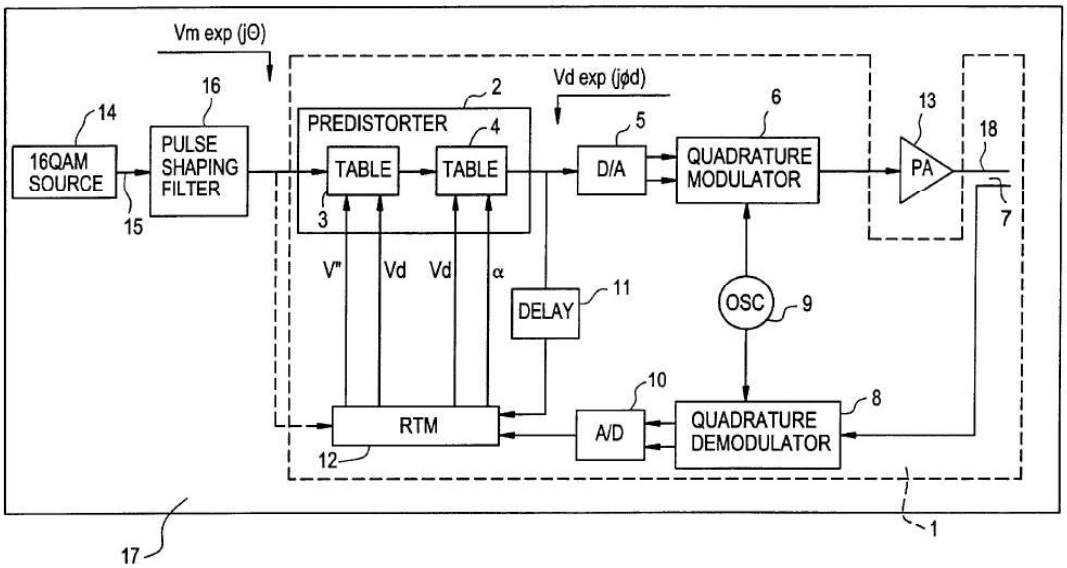

(Jeckeln 364, Fig. 1.) Jeckeln 364, like the '345 Patent, explains that the disclosed "Real Time Modeling" ("RTM") technique advantageously models the power amplifier using digital baseband signals, thereby reducing the complexity of the analysis and the need for complex convergence algorithms in the adaptation step. (*Id.* at 6:54-58, 10:49-53; *cf.* '345 Patent, 5:10-13 (". . . the

predistorting device performs the instantaneous characterization in baseband to supply a correlated predistortion function.").)

[redacted]

[redacted]

9.3 Overview of the Prior Art

9.3.1 Liu

335. "Deembedding static nonlinearities and accurately identifying and modeling memory effects in wide-band RF transmitters" ("Liu") (DEF-0002427) was published in

November 2005. (Liu, 3578.) For my purposes of my invalidity analysis, I have considered Liu to be prior art to the '561 Patent.

336. Liu has the exact same three authors as the '561 Patent's named inventors, so it is unsurprising that Liu identifies the same issue as the '561 Patent using nearly identical language (underlined below):

'561 Patent	Liu
There are several prior art models of dynamic nonlinear systems. However, one common problem of such models is in the identification procedure of the parameters of their different modules. Furthermore, the known models and procedures encounter high complexity and/or low accuracy. Moreover, they frequently do not account for the strong memory effects exhibited by the transmitter/PA. Thus, in most cases, they are not appropriate for implementation in broadband adaptive communications systems. ('561 Patent, 1:42-52.)	The common difficulty for the previous models is in the identification procedure of the parameters of their different modules. The above-mentioned models and procedures encounter high complexity and/or low accuracy. In most cases, they are not appropriate for implementation in adaptive communications systems. (Liu, 3579.)

337. Liu proposes "a new augmented Weiner model that is capable of accurately modeling wide-band RF transmitters[.]" (Liu, 3578-79. *See also id.* at 3578-79.) Liu's Figure 3 shows a "Weiner transmitter model diagram" from the prior art:

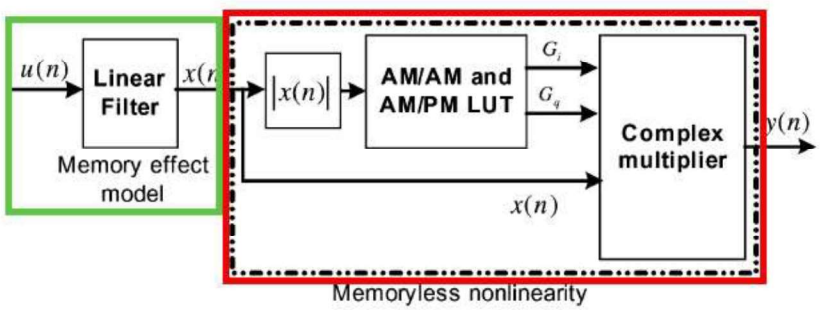

Fig. 3. Wiener transmitter model diagram from [8].

(Liu, 3580, Fig. 3.) This model consists "of a ***dynamic linear filter*** [annotated in green] followed by a static nonlinear block [annotated in red][.]" (Liu, 3580, Fig. 3.) In other words, this previous Weiner model's dynamic module accounted only for *linear* distortion sources – as opposed to *nonlinear* distortion sources.

338. Liu criticizes the "linear FIR filter in the Wiener model" for precisely this limitation: it "takes into account the frequency response around the carrier frequency (linear distortion) and not the nonlinear even-order distortion sources." (Liu, 3584.) Liu's proposed model addresses this alleged shortcoming by adding a dynamic ***nonlinear*** model, which is shown in the blue box in Figure 17:

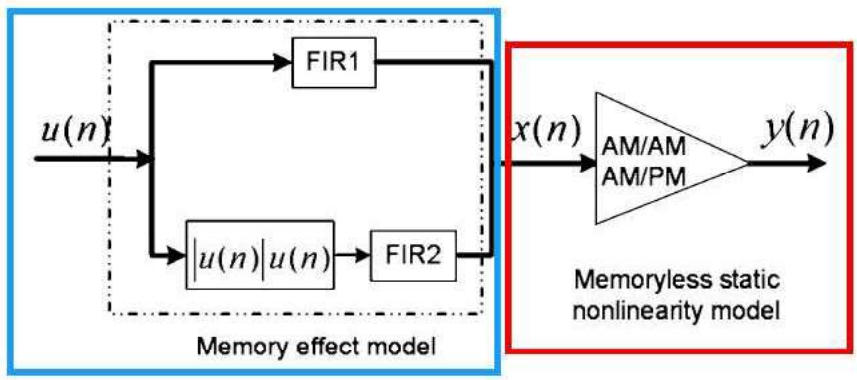

Fig. 17. Augmented Wiener transmitter model diagram.

(Liu, Fig. 17 (annotated).) This "augmented" dynamic model includes the same "linear FIR filter" as in the prior art (FIR1), but also adds "a new parallel branch" where "the input signal *u(n)* is multiplied by its magnitude |*u(n)*| and applied to another FIR filter [FIR2]" to create "a ***weak nonlinear dynamic*** FIR-based filter." (Liu, 3585, Fig. 17. *See also id.* ("The second-order terms are introduced to the dynamic memory-effect model in such a way as to make it able to mimic memory effects more accurately.").)

339. Liu's proposed model is, like the '561 Patent, "a cascade of a ***dynamic weak nonlinear*** model and a strong nonlinear static model." (Liu, 3585.) As with the '561 Patent, the DWNL module (shown in blue above) is "a weak ***nonlinear*** dynamic FIR-based filter" that is a "memory-effect model, which takes into account the dynamic properties of the transmitters in the presence of the modulated communications signal[,]" where "second-order terms are introduced to the dynamic memory-effect model in such a way as to make it able to mimic memory effects more accurately." (Liu, 3585.) Also as with the '561 Patent, the SSNL module (shown in red above) is "based on the smoothed AM/AM and AM/PM characteristics of the transmitters," and "is normally implemented by using lookup tables." (Liu, 3585.)

9.3.2 Ding

340. "Digital predistortion of power amplifiers for wireless applications" ("Ding") (DEF-0002437) is a 2004 Ph.D. thesis that, among other things, "propose[s] novel predistorters and their parameter extraction algorithms." (Ding, xiii.) For my purposes of my invalidity analysis, I have considered Ding to be prior art to the '561 Patent.

341. Ding states that "among all linearization techniques, digital predistortion is one of the most cost effective[,]" and shows a basic "Digital Predistortion System" at Figure 1:

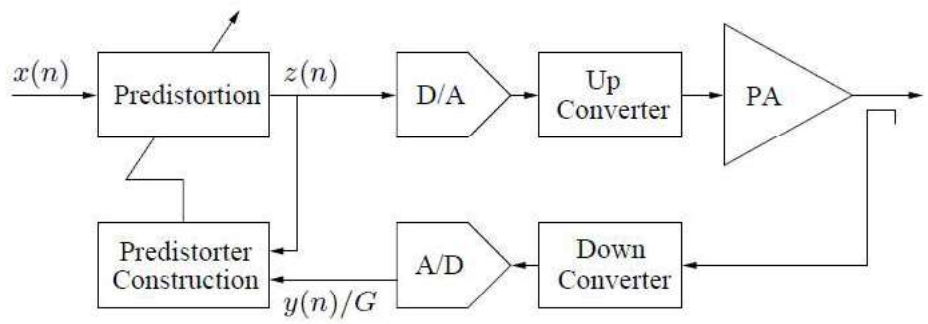

Figure 1: Digital Predistortion System Diagram

(Ding, 1, Fig. 1.) Ding also acknowledges that, because "the power amplifier characteristics may change over time because of temperature drift, component aging, etc.[,]" "the predistorter should also have the ability to adapt to these changes." (Ding, 1-2.)

342. Like the '561 Patent and Liu, Ding focuses on the dynamic, memory-based distortions. Ding criticizes "[d]igital predistortion implementations in the current literature" because they focus on the static predistortion module (i.e., "on the power amplifier that has a ***memoryless nonlinearity***; i.e., the current output depends only on the current input through a nonlinear mechanism"), and contends that "digital predistorters also need to have memory [i.e., dynamic] structures." (Ding, 2.)

343. Ding discloses several dynamic structures for predistorters, including those found within Weiner and Hammerstein models. (Ding, 11-13, Figs. 6, 7.) "The Wiener model is a linear time-invariant (LTI) [dynamic linear] system followed by a memoryless [static] nonlinearity (NL)[,]" and shown in Figure 6:

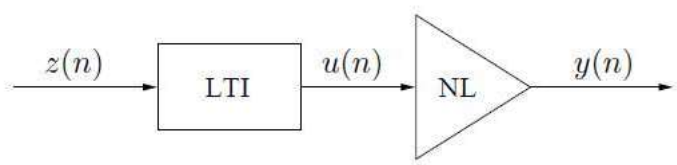

Figure 6: The Wiener Model.

(Ding, 11-12, Fig. 7.) The formulas underlying a Weiner model are below:

$$u(n) = \sum_{l=0}^{L-1} a_l \, z(n-l), \tag{13}$$

$$y(n) = \sum_{\substack{k=1 \\ k \text{ odd}}}^{K} b_k \, u(n)|u(n)|^{k-1}, \tag{14}$$

where a_l are the impulse response values of the LTI block and b_k are the coefficients of the odd-order polynomial describing the memoryless nonlinearity. Substituting (13) into (14) gives

$$y(n) = \sum_{\substack{k=1 \\ k \text{ odd}}}^{K} b_k \left[\sum_{l=0}^{L-1} a_l \, z(n-l)\right] \left|\sum_{l=0}^{L-1} a_l \, z(n-l)\right|^{k-1}. \tag{15}$$

The Wiener model was used by Clark *et al.* [11] to model the power amplifier with memory effects, where improvements in modeling accuracy were observed when the Wiener model replaces the memoryless polynomial model.

(Ding, 11.)

344. Ding teaches that "To construct a Hammerstein predistorter, the approach taken by [Kang, H. et al., "On compensating nonlinear distortions of an OFDM system using efficient adaptive predistorter," IEEE Trans. Commun., vol. 47 (Apr. 1999) ("Kang")] uses a gradient method ***to first identify the Wiener system and then find the Hammerstein predistorter as its inverse***." (Ding, 17.) "The Hammerstein model is a memoryless nonlinearity followed by an LTI system[,]" and shown in Figure 7:

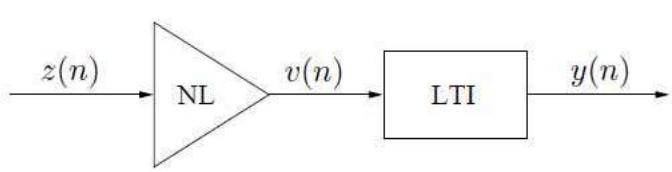

Figure 7: The Hammerstein Model.

(Ding, 12-13, Fig. 7.) The formulas underlying a Hammerstein model are below:

The Hammerstein model is a memoryless nonlinearity followed by an LTI system (see Fig. 7). The two subsystems in this model are described by

$$v(n) = \sum_{\substack{k=1 \\ k \text{ odd}}}^{K} b_k \, z(n)|z(n)|^{k-1}, \tag{16}$$

$$y(n) = \sum_{l=0}^{L-1} c_l \, v(n-l), \tag{17}$$

where b_k are the coefficients for the memoryless nonlinearity and c_l are the impulse response values of the LTI system. Substitution of (16) into (17) leads to

$$y(n) = \sum_{l=0}^{L-1} c_l \sum_{\substack{k=0 \\ k \text{ odd}}}^{K} b_k \, z(n-l) \, |z(n-l)|^{k-1}. \tag{18}$$

(Ding, 13.)

[redacted]

10.3 Overview of the Prior Art

10.3.1 Van Zelm

476. U.S. Patent No. 8,213,880 ("Van Zelm"), titled "Minimum feedback radio architecture with digitally configurable adaptive linearization," was filed October 15, 2008. (Van Zelm, (22).) For my purposes of my invalidity analysis, I have considered Van Zelm to be prior art to the '857 Patent.

477. Van Zelm discloses a signal transmission system that, *inter alia*, decreases nonlinear signal combining and cross talk. (*Id.* at 2:61-63.) As shown in Figure 6, one embodiment of Van Zelm's system comprises a Volterra digital hybrid matrix ("VDHM") that predistorts input signals by passing them through a plurality of Volterra Engine ("VE") linearizers. (*Id.* at 10:30-39, Fig. 6.)

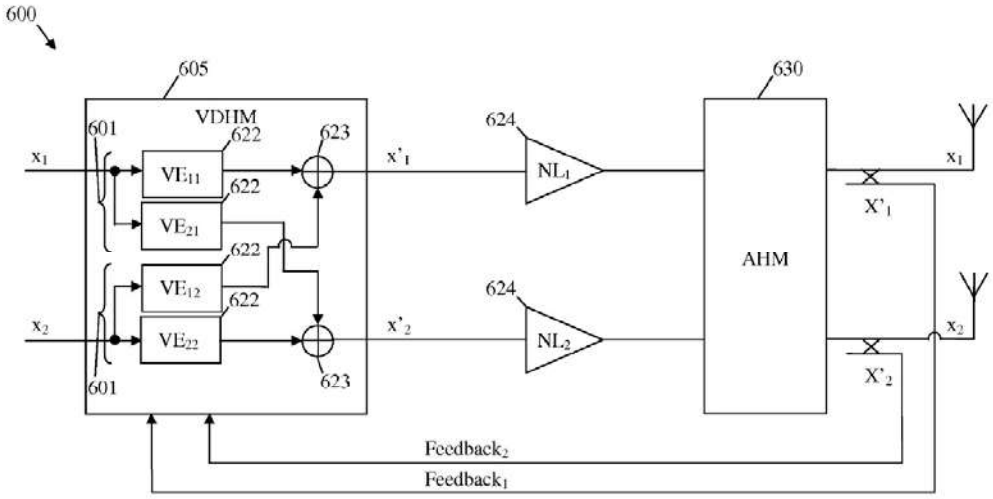

FIG. 6

(Van Zelm, Fig. 6.)

478. Each set of VE linearizers 601 receives input signals (e.g., x_1 and x_2) and outputs a number of signals corresponding to the number of VE linearizers. (*Id.* at 10:40-43, Fig. 6.) The

output signals from each set of VE linearizers are coupled together before being sent to nonlinear power amplifiers as combined signals (e.g., x'_1 and x'_2). (*Id.* at 10:44-51, Fig. 6.) Through coupling, the Van Zelm system effectively replaces parallel arrangements of components and thereby reduces cross talk. (*Id.* at 11:7-9.)

10.3.2 McCallister[35]

479. U.S. Pat. App. Publication No. 2005/0163251 ("McCallister") (DEF-0002782), titled "Predistortion circuit and method for compensating A/D and other distortion in a digital RF communications transmitter," was filed May 6, 2004. (McCallister, (22), (54).) For purposes of my invalidity analysis, I have considered McCallister to be prior art to the '857 Patent.

480. McCallister discloses a digital communications transmitter that includes digital linear and nonlinear predistortion sections to compensate for linear and nonlinear distortions. (McCallister, Abstract.) For example, McCallister explains that the reduction of linear distortion becomes more desirable as a communications signal becomes more wideband. (McCallister, [0020-21].) One embodiment of McCallister's proposed solution involves the combination of data streams that can be viewed as a wideband signal. (McCallister, [0059], Fig. 1.) A linear and nonlinear prediction block compensates for linear distortion within this wideband signal using a variety of feedback signals. (McCallister, [0064], Fig. 1.)

[35] U.S. Pat. App. Publication No. 2005/0163251 ("McCallister") corresponds to U.S. Patent 7,342,976 ("McCallister I") cited by the patent examiner during prosecution of the '857 Patent. As explained below, it is my opinion that the '857 Patent Applicants' arguments purportedly distinguishing McCallister rely on a fundamental misunderstanding of the disclosures of McCallister I, the '857 Patent's specification, and/or the underlying technology itself.

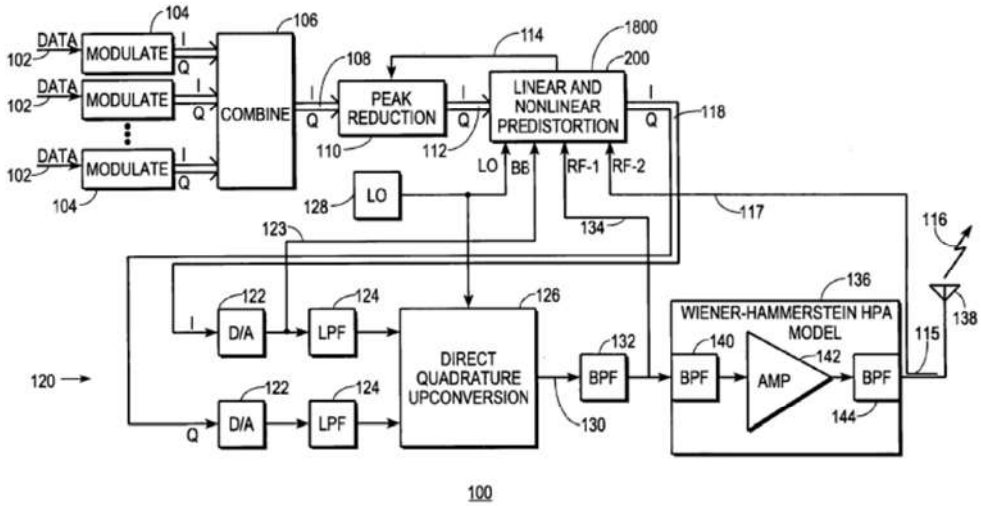

FIG. 1

(McCallister, Fig. 1.) As McCallister explains, the disclosed linear and nonlinear predistortion system can be implemented in various transmitter architectures that utilize high power amplifiers, including systems utilizing orthogonal-frequency-division modulation ("OFDM") and multiple-input, multiple-output ("MIMO") systems, among others. (*Id.* at [0058].)

10.3.3 Sadri

481. International Application No. PCT/RU2004/000036, titled "Method and apparatus to reduce crosstalk in a MIMO communication system," was filed February 5, 2004 and published on August 18, 2005 as WO 2005/076554 A1 ("Sadri") (DEF-0002951). (Sadri at (21), (22), (54), (10), (43).) For my purposes of my invalidity analysis, I have considered Sadri to be prior art to the '857 Patent. To my knowledge, Sadri was not considered during the prosecution of the '857 Patent.

482. Sadri explains that in a MIMO system, such as a wired or wireless (RF) communication system, information may be transmitted over a single communications channel that includes multiple inputs and multiple outputs. (*Id.* at 1.) Transmitting information over a single channel with multiple signal paths, however, may result in interference between adjacent

signal paths, a condition referred to as "crosstalk." (*Id.* at 2.) Sadri observed that "[t]he performance of a MIMO system may be significantly increased by reducing the amount of crosstalk in the MIMO channel," and consequently discloses improved devices and techniques for reducing crosstalk. (*Id.*)

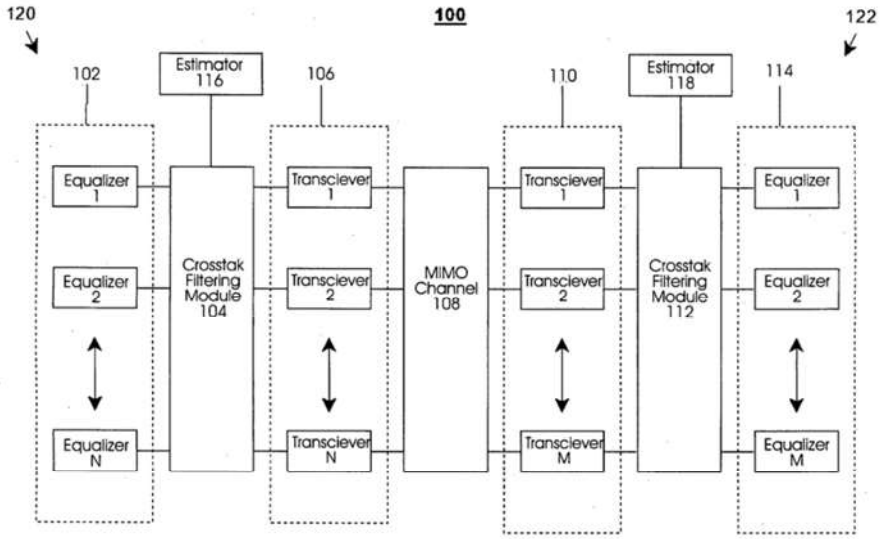

FIG. 1

(Sadri, Fig. 1.)

483. Accordingly, Sadri discloses "a method and apparatus to suppress crosstalk in a communication system utilizing a full duplex communications medium such as copper wire twisted pairs, radio-frequencies (RF), and other mediums." (*Id.*) One embodiment is directed to a crosstalk suppression scheme to reduce or cancel crosstalk from a multiple input multiple output (MIMO) full duplex or wireless communication system using either inter-symbol interference (ISI) or non-ISI channels. For example, "channel estimators 116 and 118 may be used to perform channel characterization for MIMO channel 108 in an effort to estimate potential crosstalk noise." (*Id.* at 7.) Sadri further discloses that crosstalk filtering modules ("CFM") 104 and 112 are used

in conjunction with the channel estimators to create an appropriate filter for suppressing the crosstalk noise in the MIMO system. (*Id.*)

[redacted]

[redacted]

12. INVALIDITY OF U.S. PATENT NO. 9,641,204 (THE "'204 PATENT")

12.1 Overview of the Prior Art

12.1.1 Peroulas

774. International PCT Publication No. WO 2012/129768 to Peroulas et al ("Peroulas") (DEF-0001940) relates to "a method for pre-distorting and a pre-distorter." (Peroulas, 1:3-4).

Peroulas explains that to improve efficiency, PAs should be driven into their non-linear region, resulting in higher amounts of distortion, which can be mitigated through predistortion. (*Id.*, 7:25-8:1); *See, e.g.*:

> The pre-distorter further comprises:
>
> a bandpass filter, which is configured to connect with a output of the PA, and filter out harmonics of said carrier frequencies introduced by the PA, and transmit the filtered signal;
>
> wherein the cascade of the pre-distortion functions, the PA and the bandpass filter are linear overall.

(Peroulas, 7:25-8:1).

775. Peroulas' solution includes a predistortion module (purple, below) having a plurality of predistortion units, each corresponding to one predistortion function (not shown, but producing PD_1 and PD_2, respectively). (Peroulas, 6:25-27; *see also id.* Abstract, 6:11-20, 7:1-4, 7:26-27); *See, e.g.*:

> In order to solve above technical problem, the present invention provides a pre-distorter, which comprises:
>
> a pre-distortion module, which is configured to pre-distort a plurality of baseband input signals by an equal number of pre-distortion functions to obtain equal number of pre-distorted signals respectively, wherein all of the baseband input signals input into every pre-distortion function, and each pre-distortion function has one output;
>
> an adder, which is configured to combine all of the pre-distorted signals output from every pre-distortion functions into one combined signal; and
>
> a power amplifier (PA), which is configured to amplify the combined signal,
>
> wherein the cascade of the pre-distortion functions and the PA are linear overall.
>
> Wherein
>
> the pre-distortion module is a multiple input multiple output (MIMO) pre-distortion module, wherein the number of inputs and outputs of the pre-distortion module are equal to the number of baseband input signals, and each output corresponds to one pre-distortion function;

> or
>
> the pre-distortion module includes a plurality of pre-distortion units, wherein all of the baseband input signals input into each pre-distortion unit, and each pre-distortion unit corresponds to one pre-distortion function and has one output.

(Peroulas, 6:10-27). Peroulas uses indirect learning where feedback is taken concurrently from the output of the predistorters and the output of the PA, and fed into a MIMO Capture Buffer 309 and DSP block 316 (orange) to update the predistortion functions. (*Id.*, 8:10-15, 9:1-10); *See, e.g.*:

> coefficients $h_{i,j,k_1,\ldots k_N}$ are chosen such that the cascade of the MIMO pre-distortion function, and the PA will be linear overall;
>
> BB_i are baseband input signals, and PD_i are the pre-distorted signals,
>
> Wherein the coefficients $h_{i,j,k_1,\ldots k_N}$ are obtained by solving:
>
> $$PD_i(n) = \sum_{j=0}^{M_i-1}\sum_{k_1=0}^{L_{i,1}-1}\sum_{k_2=0}^{L_{i,2}-1}\cdots\sum_{k_N=0}^{L_{i,N}-1}\hat{h}_{i,j,k_1,k_2,\ldots,k_N}PO_i(n-j)\left|PO_1(n-j)\right|^{k_1}\left|PO_2(n-j)\right|^{k_2}\ldots\left|PO_N(n-j)\right|^{k_N}$$
>
> wherein PO_i are captured signals of the pre-distorted signals, which are captured from the output of the PA.

(Peroulas, 8:10-15).

> a capture buffer, which is configured to obtain PD_i and PO_i, and output the obtained PD_i and PO_i; to a digital data processor (DSP), and the number of inputs of the capture buffer equals to twice of the number of the baseband input signals; and
>
> a DSP, which is configured to calculate coefficients $h_{i,j,k_1,\ldots k_N}$ by solving equation Eq.2, and output the calculated coefficients $h_{i,j,k_1,\ldots k_N}$ to the pre-distortion module.

(Peroulas, 9:1-5).

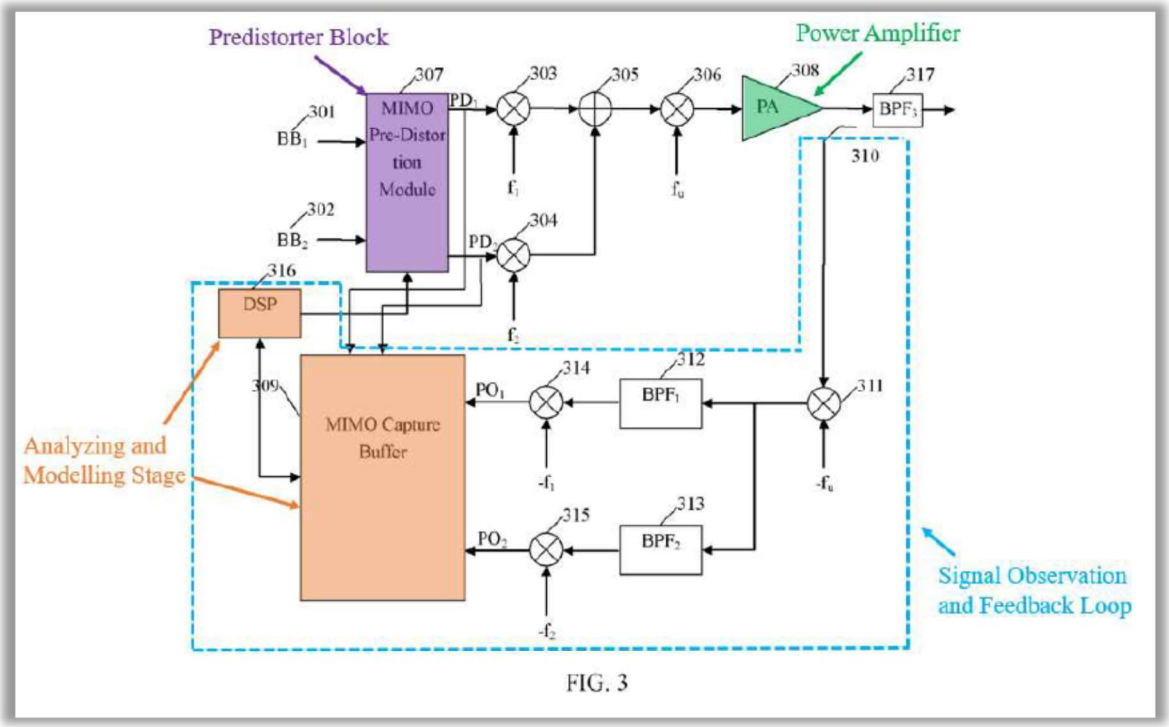

FIG. 3

(Peroulas, Fig. 3 (Annotated)).

12.1.2 Posti

776. U.S. Patent No. 6,999,523 to Posti ("Posti") (DEF-0008984) discloses a "multi-frequency carrier transmitter" including a plurality of input signals each corresponding to a channel ("User 1 Data" through "User N Data") and a plurality of digital modulators 106 (purple) to predistort these signals before amplification by PA 122 (green). (Posti, 2:43-60, 4:66-5:5, 5:13-15, 5:41-42); *See, e.g.:*

> According to one aspect of the present invention, there is provided a multi frequency carrier transmitter comprising input means for receiving a plurality of different digital signals to be transmitted, said different signals to be transmitted on different carrier frequencies, amplifier means for receiving a composite signal comprising said different signals at the respective carrier frequencies and amplifying said composite signal; and predistortion means for predistorting said plurality of digital signals prior to amplification of the composite signal by said amplification means, said predistortion provided by said predistortion means being subsequently altered in dependence on the difference between said input signals and the output at said amplifier means.

> Accordingly, embodiments of the present invention provide a multi carrier transmitter which is able to deal with the problems of nonlinearity by using predistortion. The predistortion can be implemented more simply than the feedback method discussed in the prior art.

(*Id.*, 2:43-60);

> In general terms the modulators 106 take the baseband input from the respective channel encoder 104, pass that input through a shaping filter and mix the signal with a carrier signal at an intermediate frequency which is higher than the baseband frequency but less than the frequency at which the signals are trans mitted to thereby provide a modulated output.

(*Id.*, 4:66-5:5);

> The combiner 110 combines the outputs of all of the modulators 106 to provide a single output. That output contains the Signals for each of the frequencies.

(*Id.*, 5:13-15);

> The output of the second bandpass filter 120 is input to the power amplifier 122 which amplifies the received input.

(*Id.*, 5:41-42).

777. Posti uses indirect learning to estimate and linearize the distortion introduced by the PA and includes adaptive predistorter 108 (orange) that receives feedback signals from the output of the PA (red) and the output of the digital modulators (blue). (Posti, 5:50-52, 6:23-33); *See, e.g.*:

> Between the amplifier 122 and the third bandpass filter 124, there is arranged a coupler 128 which is arranged to sample a small part of the signals which are transmitted.

(*Id.*, 5:50-52);

> The adaptive predistorter 108 thus receives for each channel a version of the signal before it passes through the combiner 110 and Subsequent elements of transmit part 102 of the base station 100 (from the respective digital modulator) and a version of the signal after it has passed through the transmit part 102 (from the channelizer 140). The predistorter 108 thus compares like versions of the same signal eg, both signals will be modulated at the same frequencies. The adaptive predistorter 108 is arranged to compare these signals.

(*Id.*, 6:23-32).

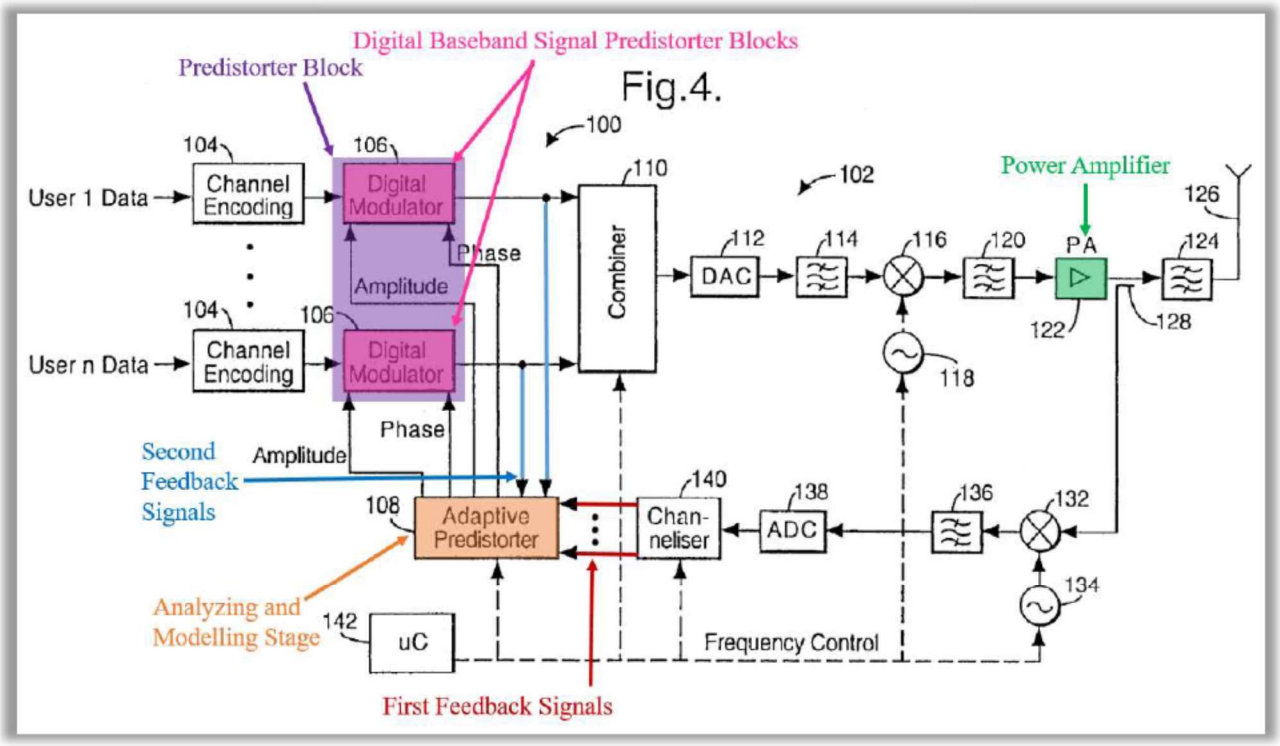

(Posti, Fig 4 (Annotated)).

778. Posti explains that "embodiments of the present invention can be used with any suitable transmitter which is sending signals at more than one frequency at the same time" (Posti, 9:49-52), directly disclosing and suggesting that Posti's "multi-frequency carrier transmitter" (*id.*, Abstract) is equally applicable to "multi-band" transmission systems. In other words, a POSITA understood Posti's input channels "User 1 Data" through "User n Data" encompass inputs for the different frequency channels located in the multiple bands used in a multi-band system.

12.1.3 Cidronali

779. "A New Approach for Concurrent Dual-Band IF Digital PreDistortion: System Design and Analysis" by Cidronali et al ("Cidronali") (DEF-0001106) proposes a dual-band DPD

system "capable of a simultaneous predistortion of a concurrent dual-band power amplifier at both frequency bands." (Cidronali, at p. 1); *See, e.g.*:

> In this paper we propose a novel method of Dual Band DPD (DB-DPD), capable of a simultaneous predistortion of a concurrent dual-band power amplifier at both frequency bands. The proposed method uses a single band memory polynomial DP for linearization, operating at a proper IF. As feedback path the system adopts a subsampling receiver, which allows extreme flexibility and coherent dual-band down-conversion. With the selection of an appropriate sample rate, the RF channels are translated side-by-side at a low IF with no spectral overlap.

(Cidronali, at p. 1). Cidronali's system uses a digital IF predistortion block (purple) to generate predistorted signals for the PA (green). For its post-PA feedback, Cidronali uses subsampling and a subsampling receiver (blue) in a signal observation and feedback loop (light blue) to sends this information to an Adaptation block (orange).

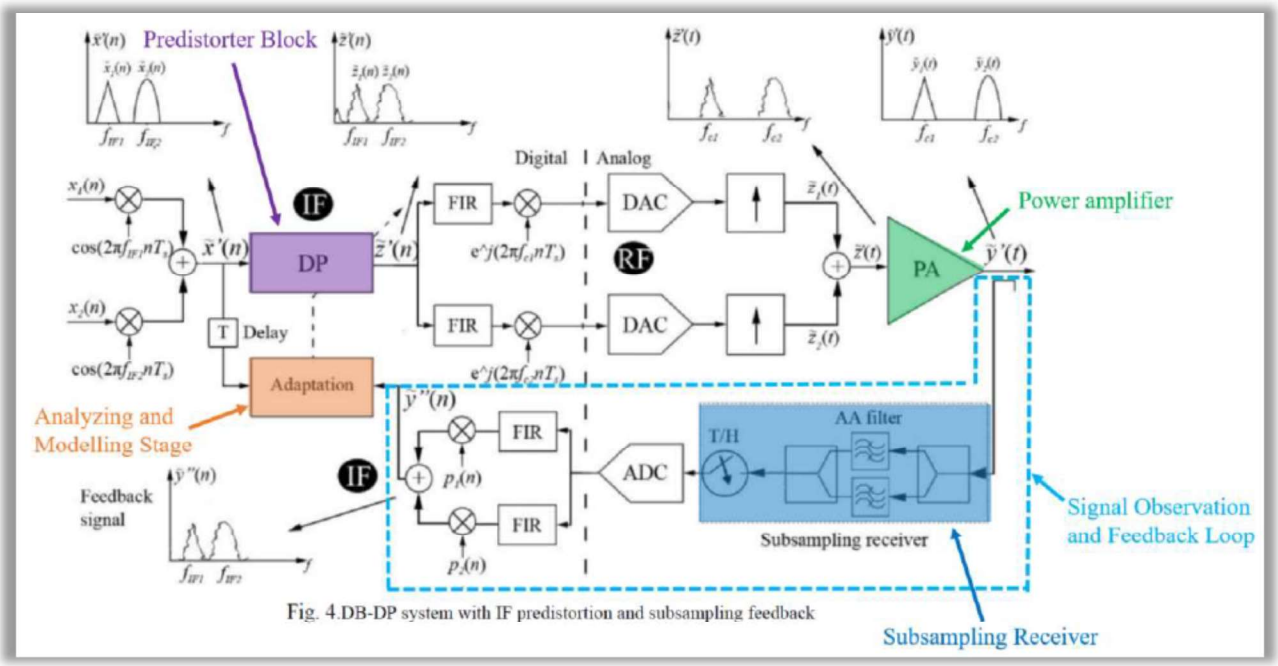

Fig. 4.DB-DP system with IF predistortion and subsampling feedback

(Cidronali, Fig. 4 (Annotated)).

780. Cidronali's subsampling receiver uses a down-conversion block, filter bank, track and hold block, and ADC sampling according to the widely understood bandpass/subsampling theorem. (Cidronali, at p. 2); *See, e.g.*:

> The subsampling adopted in the DB-DPD feedback recalls somehow the receivers adopted in the multiband radios and is based on the bandpass sampling theorem. This principle can be adapted to down-convert two (or more) band-limited signals s_1 and s_2, located at different centre frequencies.

(Cidronali, at p. 2);

> The feedback path proposed in this paper consists of the coherent dual-band subsampling receiver discussed in the previous section. The two bands composing are aliased side-by-side in the baseband, then digitized by a single ADC.

(Cidronali, at p. 2). Cidronali also demonstrated a subsampling frequency, f_s, of 146.5 MHz for two transmission signal frequencies of 2100 MHz and 3500 MHz. (*Id.*, 000003); *See, e.g.*:

> The DB-DP was simulated by Matlab/Simulink®. We considered two 16 QAM signals, with amplitudes P=-10dBm and centre frequencies f_{c1}=2.1 GHz and f_{c2}=3.5 GHz; the sampling frequency was set to f_s =146.5 MHz.

(Cidronali, at p. 3). This teaches a subsampling receiver operating according to the subsampling equations (1) and (2) defined in the Technical Background to the '204 and '296 Patents (§11.1.3), and similarly discloses the use of a subsampling frequency lower than twice a highest signal frequency.

781. It is also notable that Smart RF and Dr. Bassam were well aware of Cidronali as Dr. Bassam cites to Cidronali in his "2-D DPD" paper. (SMARTRF_0000097 at 103 (endnote 12).)

12.1.4 Bassam

782. U.S. Patent No. 8,767,857 to Bassam et al ("Bassam") (DEF-0000013) is titled "Multi-Cell Processing Architectures for Modeling and Impairment Compensation in Multi-Input Multi-Output Systems," and is directed to a system that "compensates for any distortion,

interactions, and crosstalk" that arises when modulated signals separated in the frequency domain are amplified by a PA, resulting in "significant distortion on the output signal" which "significantly degrade the output signal's quality and result in poor data communications." (Bassam, 1:35-37, 1:51-55, 2:2-3).

783. Bassam proposes a Multi-Input Multi-Output (MIMO) pre-compensator, shown in Figure 10 (below), comprising a plurality of input signals, a matrix of pre-processing cells (pink) for generating a plurality of predistorted output signals, and a MIMO transmitter. (Bassam, 2:29-36). Bassam's MIMO transmitter includes low pass filters, up-converters, a power combiner, and power amplifier (green) to transmit the predistorted signal at a carrier frequency. (*Id.*, 5:60-65).

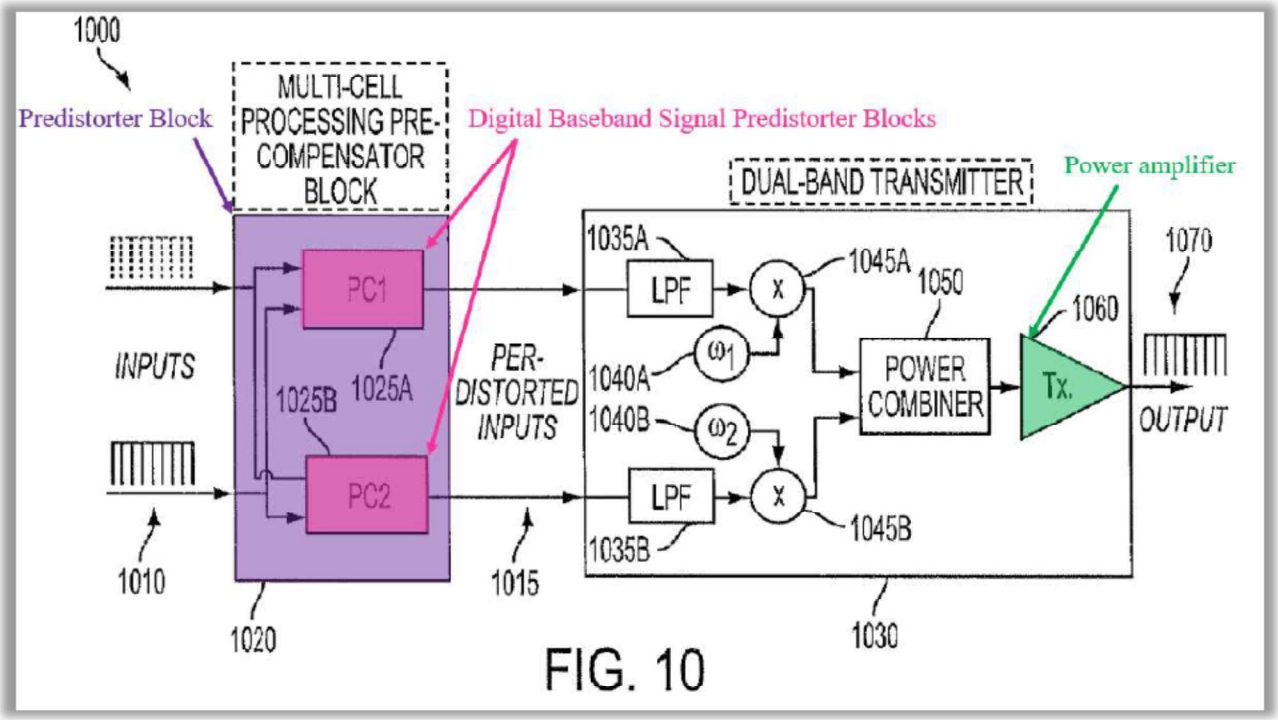

FIG. 10

(Bassam, FIG. 10 (Annotated)).

[redacted]

[redacted]

13. INVALIDITY OF U.S. PATENT NO. 10,958,296 (THE "'296 PATENT")

13.1 Overview of the Prior Art

1001. *See* Section 12.1 above which I incorporate herein by reference.

[redacted]